	STATE PROJECT	PARISH	SHEET No

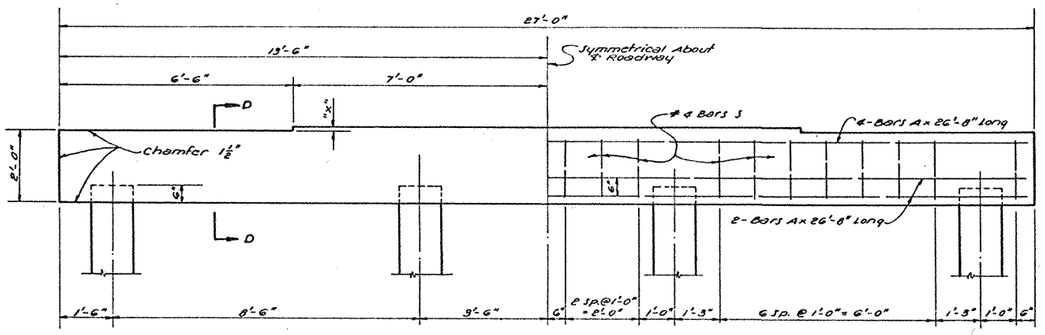

4 PILE BENT

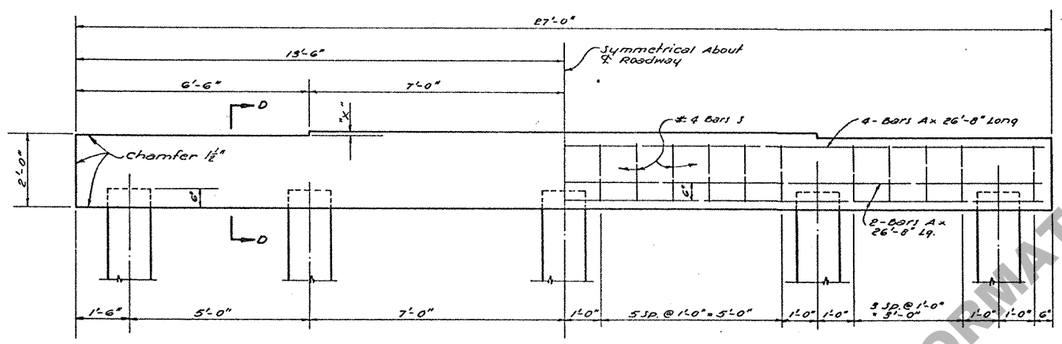

5 PILE BENT

INTERMEDIATE BENT QUANTITIES-DIMENSIONS-PILE LOADS										
SPAN	DIM. "X"	4-PILES				5-PILES				SPAN
		SIZE OF A BARS	CLASS "A" CONC.	DEF. REIN. STEEL	AVG. PILE LOAD	SIZE OF A BARS	CLASS "A" CONC.	DEF. REIN. STEEL	AVG. PILE LOAD	
FEET	IN.		CU. YDS.	LBS.	TONS		CU. YDS.	LBS.	TONS	FEET
20	1½	#7	5.06	562	18.5					20
25	1½	#7	5.06	562	21.2					25
30	1⅝	#7	5.05	562	23.9					30
35	1½	#7	5.03	562	26.7					35
40	1⅝	#8	5.05	696	29.6	#8	5.02	696	23.7	40
45	1½					#9	5.04	851	25.9	45
50	1½					#9	5.01	851	28.3	50

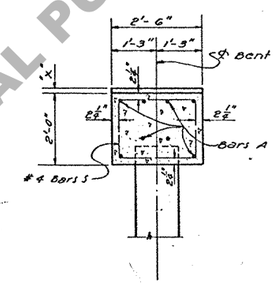

JECTION D-D

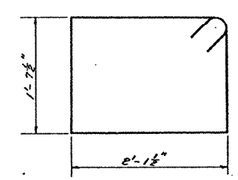

#4 BARS S
(8'-7" LONG)

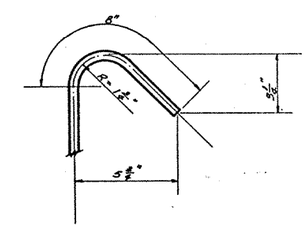

135° HOOK FOR #4 BARS S

FOR INFORMATIONAL PURPOSES ONLY

INTERMEDIATE BENTS

STANDARD PLAN
REINFORCED CONCRETE PILE BENTS
20'-0" THRU 50'-0" SPANS
24'-0" CLEAR ROADWAY 1'-6" SIDEWALKS
FOR I-BEAM SPANS H15-44 LOADING
DATED July, 1956 TO BE USED WITH STD. PLAN S.C. 79-15

STATE OF LOUISIANA
DEPARTMENT OF HIGHWAYS

DATE	DESCRIPTION	BY
	REVISIONS	

DESIGNED W.C.B. Jr. | DETAILED W.C.B. Jr. | TRACED E. Pettigrew
CHECKED R.B. Barrett | CHECKED R.B. Barrett | CHECKED R.B. Barrett
BRIDGE DESIGN SECTION

SHEET 2 OF 2

C·S·207·15