STATE PROJECT	PARISH	SHEET NO.

TYPE 2

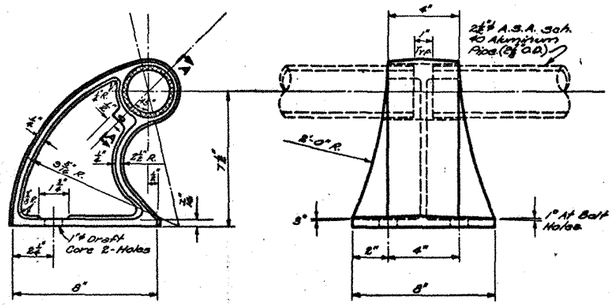

END ELEVATION

SIDE ELEVATION

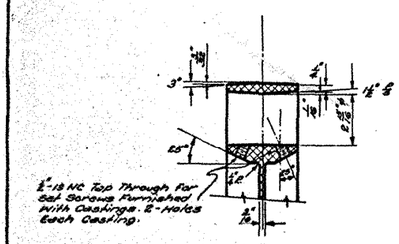

SECTION A-A

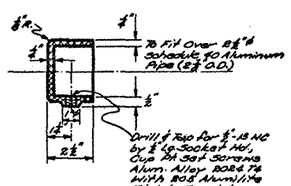

RAIL CAP

NOTES:

1. Handrail Casting Shall be Full Permanent Mold Castings Using Aluminum Alloy A356-T6 & Shall Have a "Sand Blast" Finish. (ASTM B108 59T, Alloy SG 70B-T6).
2. Anchor Bolts, Nuts, Shims & Washers Shall be Aluminum. Bolts & Nuts Shall be Made from Rod of Alloy 2024-T4 with № 205 Alumilite Finish (ASTM B211-54T, Alloy CG42A-T4) & Given An Anodic Coating of At Least 0.0002 Inches Thick & Chromate Sealed). Shims Shall be of Alloy 1100-0 (ASTM B209-54T, Alloy 3S0A-0) Aluminum Washers Shall be of Alloy 2024-T4 (ASTM B209-54T, Alloy CG42A-T4).
3. The Pipe Rail Shall be 2½" Ø A.S.A. Schedule 40, Aluminum Alloy 6063-T6. (ASTM B241-54T, G51QA-T6).
4. The Set Screws For Holding Rail In Casting Shall be Stainless Steel With Socket Head & Cup End.
5. All Aluminum Surfaces to be Placed in Contact With, or Fastened to, Steel Members Shall be Thoroughly Coated With An Approved Aluminum Impregnated Caulking Compound. All Aluminum Surfaces to be Placed in Contact With Concrete Shall be Given A Heavy Coat of An Approved Alkali-Resistant Bituminous Paint, or A Coat of Zinc Chromate Paint, & Allowed to Dry Before Placing on the Concrete.
6. All Details For Handrailing, other than Shown on this Plan Shall be in Accordance With Applicable Sheets of the Project Plans.

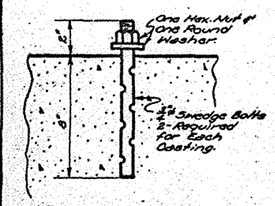

ANCHOR BOLT DETAIL

TYPES 3 & 4

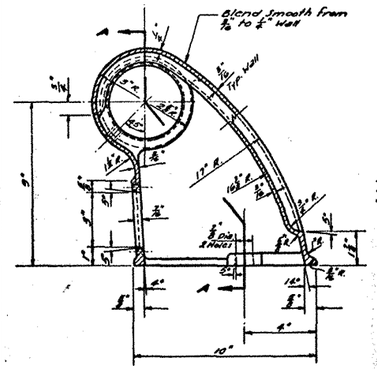

END SECTION

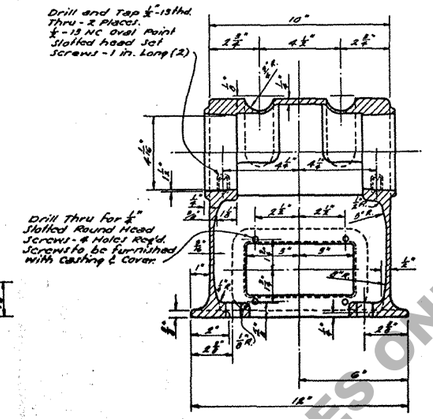

SECTION A-A

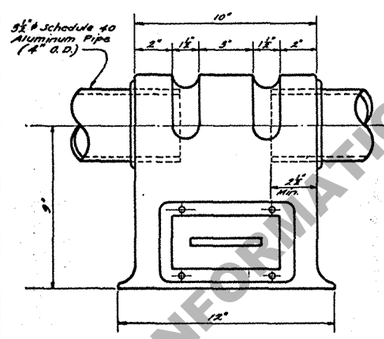

SIDE ELEVATION

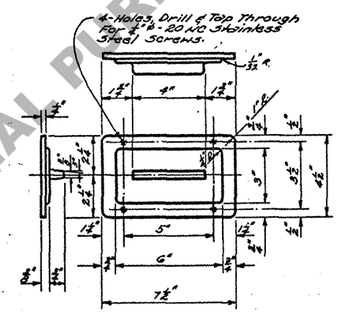

ACCESS DOOR COVER
Cast To Fit & Furnished With Casting

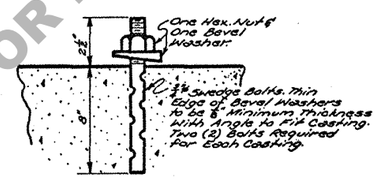

ANCHOR BOLT DETAIL

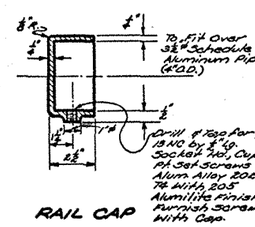

RAIL CAP

NOTES:

1. Handrail Casting Shall be Full Permanent Mold Castings Using Aluminum Alloy A356-T6 & Shall Have a "Sand Blast" Finish. (ASTM B108-59T, Alloy SG 70B-T6).
2. Anchor Bolts, Nuts, Shims & Washers Shall be Aluminum. Bolts & Nuts Shall be Made from Rod of Alloy 2024-T4 with № 205 Alumilite Finish (ASTM B211-54T, Alloy CG42A-T4) & Given An Anodic Coating of At Least 0.0002 Inches Thick & Chromate Sealed). Shims Shall be of Alloy 1100-0 (ASTM B209-54T, Alloy 3S0A-0) Aluminum Washers Shall be of Alloy 2024-T4 (ASTM B209-54T, Alloy CG42A-T4).
3. The Pipe Rail Shall be 3½" Ø A.S.A. Schedule 40 Aluminum Alloy 6063-T6. (ASTM B241-54T, G51QA-T6).
4. The Set Screws For Holding Rail In Casting Shall be Stainless Steel With Socket Head & Cup End.
5. All Aluminum Surfaces to be Placed in Contact With, or Fastened to, Steel Members Shall be Thoroughly Coated With An Approved Aluminum Impregnated Caulking Compound. All Aluminum Surfaces to be Placed in Contact With Concrete Shall be Given A Heavy Coat of An Approved Alkali-Resistant Bituminous Paint, or A Coat of Zinc Chromate Paint, & Allowed to Dry Before Placing on the Concrete.
6. All Details For Handrailing, other than Shown on this Plan Shall be in Accordance With Applicable Sheets of the Project Plans.
7. The Casting Shown is Same as Part № KAISER 1105 Except For Requirement of Access Door Cover & Use of ¼" Ø Stainless Steel Screws to Hold Pipe Rail. Casting to be as Shown or Approved Equal.

TYPE 5

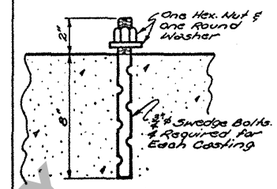

ANCHOR BOLT DETAIL

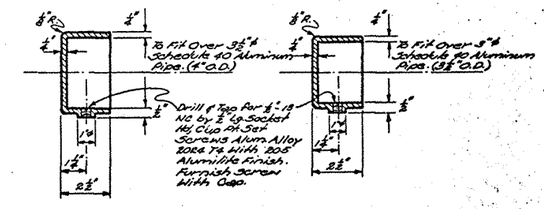

RAIL CAPS

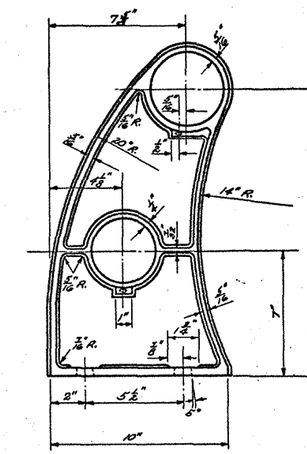

END ELEVATION

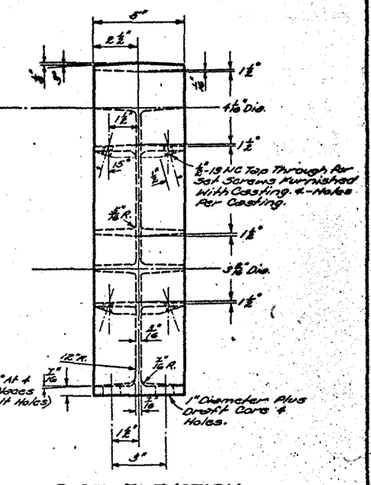

SIDE ELEVATION

NOTES:

1. Handrail Casting Shall be Full Permanent Mold Castings Using Aluminum Alloy A356-T6 & Shall Have a "Sand Blast" Finish. (ASTM B108-59T, Alloy SG 70B-T6).
2. Anchor Bolts, Nuts, Shims & Washers Shall be Aluminum. Bolts & Nuts Shall be Made from Rod of Alloy 2024-T4 with № 205 Alumilite Finish (ASTM B211-54T, Alloy CG42A-T4) and Given An Anodic Coating of Least 0.0002 Inches Thick & Chromate Sealed). Shims Shall be of Alloy 1100-0 (ASTM B209-54T, Alloy 3S0A-0) Aluminum Washers Shall be of Alloy 2024-T4 (ASTM B209-54T, Alloy CG42A-T4).
3. The Pipe Rails Shall be 3½" Ø A.S.A. Schedule 40 Aluminum Alloy 6063-T6 (ASTM B241-54T, G51QA-T6).
4. The Set Screws For Holding Rail In Casting Shall be Stainless Steel With Socket Head & Cup End.
5. All Aluminum Surfaces to be Placed in Contact With, or Fastened to, Steel Members Shall be Thoroughly Coated With An Approved Aluminum Impregnated Caulking Compound. All Aluminum Surfaces to be Placed in Contact With Concrete Shall be Given A Heavy Coat of An Approved Alkali-Resistant Bituminous Paint, or a Coat of Zinc Chromate Paint & Allowed to Dry Before Placing on the Concrete.
6. All Details For Handrailing, other than Shown on this Plan Shall be in Accordance With Applicable Sheets of the Project Plans.
7. The Casting Shown is Same as Part № Alcoa 2001 Except For use of ¼" Stainless Steel Screws to Hold Pipe Rails. Casting to be as Shown or Approved equal.

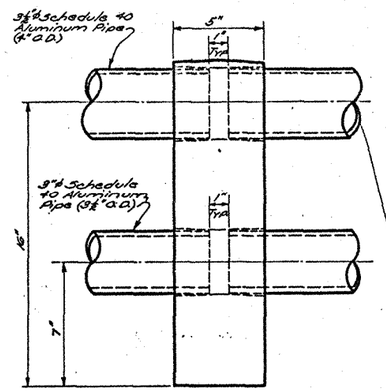

SIDE ELEVATION SHOWING RAILS

STANDARD PLAN
ALUMINUM RAILING
FOR
BRIDGE HANDRAIL
TYPES 2,3,4 & 5

DATED June 6, 1957

DATE	DESCRIPTION	BY
6-22-61	CASTING 3 & 4	
7-12-60	SPECS. FOR ALUMINUM CASTINGS	
11-5-59	REQUIRED ½" Set Screw (Types 3 & 4 Handrail)	
10-23-59	Sheet 1 of 2 Revised	
2-9-59	NO. OF ANCHOR BOLTS TYPE 5	

REVISIONS

STATE OF LOUISIANA
DEPARTMENT OF HIGHWAYS
BRIDGE DESIGN SECTION

DESIGNED | DETAILED | TRACED | CHECKED | CHECKED | CHECKED

Sht. 2 of 2

C.M. 184

FOR INFORMATIONAL PURPOSES ONLY