STATE PROJECT	PARISH	SHEET NO

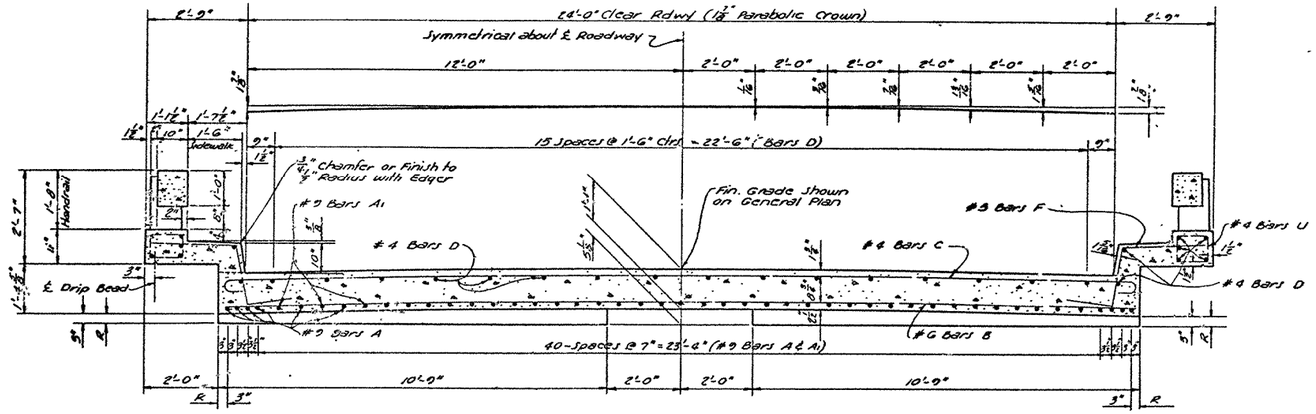

SECTION A-A

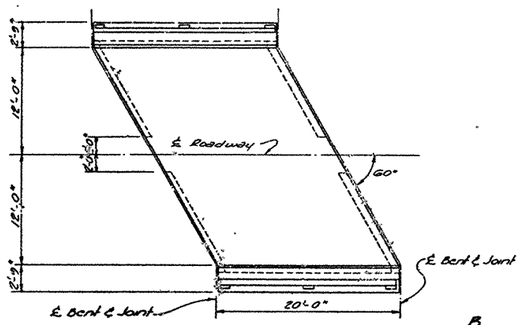

60° RT. CROSSING

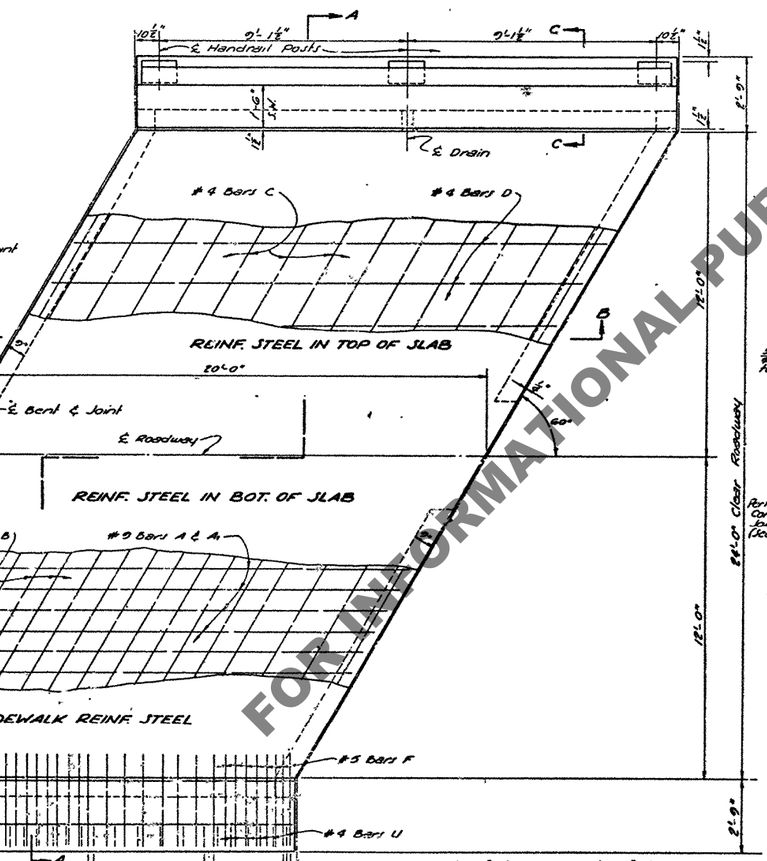

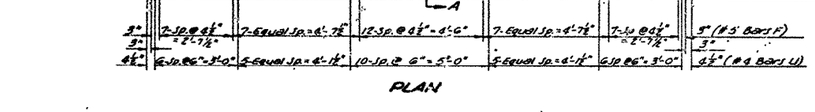

PLAN

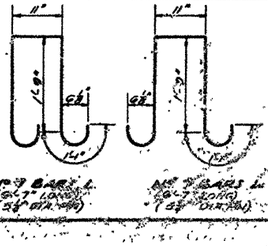

No. 9 BARS L (61'-7" LONG) (2 1/4" DIA. PIN)

No. 7 BARS L1 (63'-7" LONG) (1 3/4" DIA. PIN)

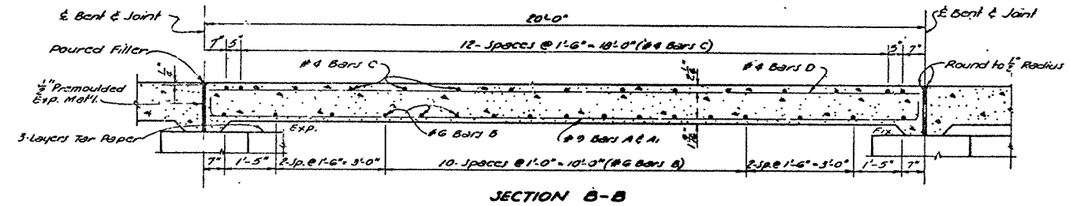

SECTION B-B

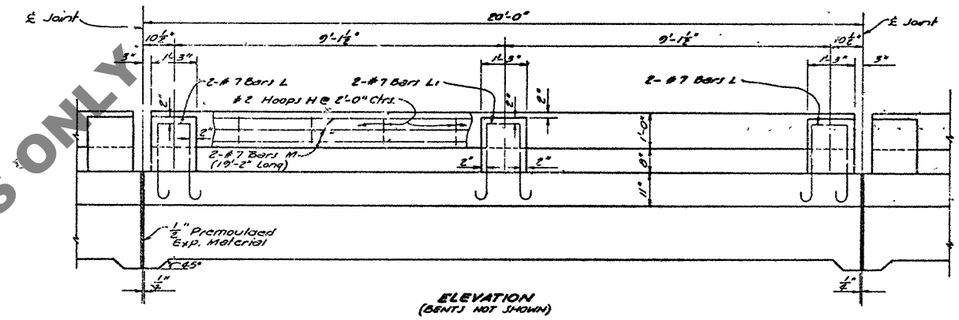

ELEVATION
(BENTS NOT SHOWN)

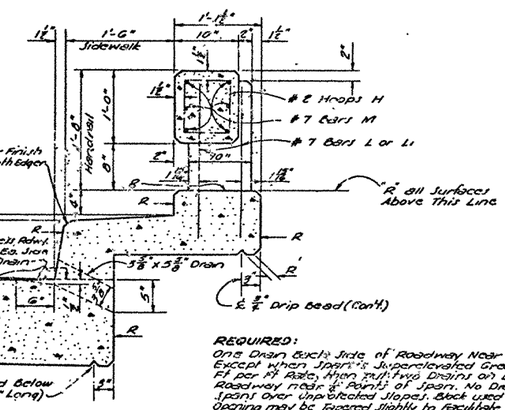

SECTION C-C
(SHOWING DRAIN & HANDRAIL REINF. STEEL)

REQUIRED:
One Drain Each Side of Roadway Near ℄ of Span, Except When Span is Superelevated Greater Than 0.026 Ft per Ft Rate, then Put Two Drains on Low Side of Roadway near ℄ Points of Span. No Drains req'd in End Spans over Unprotected Slopes. Block used for Forming Opening may be Tapered Slightly to Facilitate Withdrawal.

NOTE A: (Req'd only if Const. Joint is used) After Completing Pour for Roadway Slab, a Minimum of 3 Days Shall Elapse for Concrete in Roadway Slab Shall Attain a Minimum Compressive Strength of 1500 p.s.i. before Beginning pour for Sidewalk Cantilever.

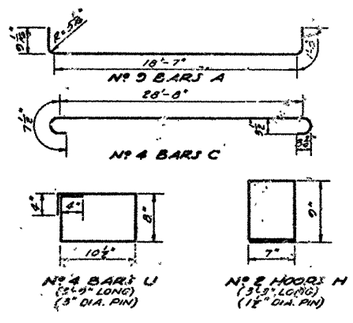

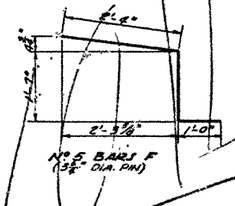

No. 5 BARS F (3 1/4" DIA. PIN)

QUANTITIES (ONE SPAN)

BAR	SIZE	No.	UNIT LENGTH	TOTAL LENGTH	LOCATION
A	#9	27	21'-7"	583'-9"	Bottom of Slab (Bent)
A1	#9	20	19'-7"	391'-8"	Bottom of Slab (Int.)
TOTAL No. 9 BARS = 2247'-3" = 3022 LBS.					
B	#6	17	20'-0"	425'-0"	Bottom of Slab
TOTAL No. 6 BARS = 425'-0" = 766 LBS.					
F	#5	36	4'-8"	168'-0"	Sidewalk & Slab
TOTAL No. 5 BARS = 168'-0" = 175 LBS.					
C	#4	18	30'-4"	546'-0"	Top of Slab
D	#4	30	19'-7"	588'-0"	Top of Slab & Sidewalk
U	#4	36	3'-9"	237'-0"	Handrail & Parapet
TOTAL No. 4 BARS = 1209'-0" = 805 LBS.					
TOTAL DEFORMED REINF. STEEL = 4762 LBS.					
TOTAL CLASS "A" CONCRETE = 24.05 CU. YDS.					
TOTAL CONCRETE HANDRAIL = 99.6 LIN. FT.					

GENERAL NOTES:
CONSTRUCTION SPECIFICATIONS: Latest Approved La. Dept. of Highways Std. Specs.
DESIGN SPECIFICATIONS: A.A.S.H.O. 1961 as Amended to Dec. 31, 1962.
LIVE LOAD: H15-44.
All Concrete to be Class "A".
Exposed Corners to have 3/4" Chamfer, unless Otherwise Noted.
Reinforcing Bars Shall be Intermediate or Hard Grade A.S.T.M. A-15, or Rail Steel A.S.T.M. A16, Conforming with A.S.T.M. A-305.
Dimensions Relating to Reinforcing Steel are to Bar Center.
* Premoulded Expansion Material, Poured Filler & Tar Paper to be Included in Price Bid for Class "A" Concrete.
Concrete and Reinforcing Steel in Handrail on Slab Span to be Paid per Lin. Ft. of Concrete Handrail.
This Sheet does not Include L & L1.
R → Denotes Class 2 Rubbed Finish.

STANDARD PLAN
20'-0" CONCRETE SLAB SPAN
LIVE LOAD: H15-44
24'-0" ROADWAY — 1'-6" SIDEWALKS
60° CROSSING — PARABOLIC CROWN
DATED Aug. 9 1963

STATE OF LOUISIANA
DEPARTMENT OF HIGHWAYS
DESIGNED R. Smith DETAILED R. Smith TRACED J. Chalmers
CHECKED W.B. Rowe CHECKED W.B. Rowe CHECKED W.B. Rowe
BRIDGE DESIGN SECTION

DATE	DESCRIPTION	BY
9-10-69	Constr. Joint	

REVISIONS

S513C-60-24P

FOR INFORMATIONAL PURPOSES ONLY