STANDARD PLANS

FOR INFORMATION ONLY

TABLE OF CONTENTS					
PAGE NO.	STANDARD PLAN NUMBER	DESCRIPTION	REVISION DATE	EFFECTIVE FOR THE LETTING OF	OBSOLETE DATE
10-12	AASHTO GIRDERS	AASHTO Girder Details	12/7/2025	1/16/2026	
13-14	BM-01	Bedding and Backfill for Drainage Structures	6/1/2026	12/9/2026*	
15	BR-COMMON	Bridge Barrier General Notes & Index	11/26/2025	1/14/2026	
16	BR-36SS	Bridge Barrier 36" Single Slope	11/26/2025	1/14/2026	
17	BR-36SS-TR1	Bridge Barrier Transition on Wing Wall	11/26/2025	1/14/2026	
18	BR-36SS-TR2	Bridge Barrier Transition on Bridge Span	11/26/2025	1/14/2026	
19	CB-01	Concrete Open Top Catch Basin (12' Max. Depth)(24" x 36" Max. Pipe)(Specify Grate Type)	6/1/2026	12/9/2026*	
20	CB-02	Concrete Open Top Catch Basin (12' Max. Depth)(42" x 72" Max. Pipe)(Specify Grate Type)	6/1/2026	12/9/2026*	
21	CB-04	Precast Open Top Catch Basin (End of Line Basin)(2' Max. Depth)(15" Max. Pipe)	6/1/2026	12/9/2026*	
22	CB-05	Catch Basin Yard Drain, Open Top, 8" Max. Pipe, (1'-1" Max. Depth)(Precast or CIP) Catch Basin Curb Opening (42" x 72" Max. Pipe)(12' Max. Depth)(4" Mount. or 6" Barrier)	6/1/2026	12/9/2026*	
23	CB-06	R. C. Catch Basin, Curb & Gutter Opening (4" Mount. or 6" Barr.)(Max. Pipe 42" x 72")(Max. Depth 12')	6/1/2026	12/9/2026*	3/10/2027
24	CB-06	R. C. Catch Basin, Curb & Gutter Opening (4" Mount. or 6" Barr.)(Max. Pipe 42" x 72")(Max. Depth 12')	8/19/2026	3/10/2027	
25	CB-07	Dbl. Comb.-Type Catch Basin (4" mount or 6" Barr.)(Max. Pipe Parallel to Curb: 72" RCP or 84" CMP)(Max. Pipe Perpendicular to Curb: 84" RCP or 96" CMP)(Max Depth 20')	6/1/2026	12/9/2026*	
26	CB-08	Comb. Type Catch Basin (Trunk line Under Pavement)(4" mount. or 6" Barr.)(Max. Pipe Parallel to Curb: 84" RCP or 96" CMP)(Max. Pipe Perpendicular to Curb: 84" RCP or 96" CMP)(Max. Depth: 20')	6/1/2026	12/9/2026*	
27	CB-09	Comb. Type Catch Basin (Trunk line Under Pavement)(4" mount. or 6" Barr.)(Max. Pipe Parallel to Curb: 84" RCP or 96" CMP)(Max. Pipe Perpendicular to Curb: 84" RCP or 96" CMP)(Max. Depth: 20')	6/1/2026	12/9/2026*	
28	CB-Adjust	Adjusting / Conversion of Existing Catch Basins or Manholes	6/1/2026	12/9/2026*	
29	CC-30-20	2' to 5' Span x 2' to 5' Height R. C. Box Culvert (Single Opening) (Obsolete-use for extensions only)	1/5/1978		
30	CC.S.M. 4-6.S.45°.1	4' x 4', 5' x 5', 6' x 6' R. C. Box Culvert (Multiple Openings)	1/11/1978		
31	CC.S.M. 4-6.S.60°.1	4' x 4', 5' x 5', 6' x 6' R. C. Box Culvert (Multiple Openings)	1/11/1978		
32	CC.S.M. 4-6.S.75°.1	4' x 4', 5' x 5', 6' x 6' R. C. Box Culvert (Multiple Openings)	1/11/1978		
33	CC.S.M. 4-6.S.90°.1	4' x 4', 5' x 5', 6' x 6' R. C. Box Culvert (Multiple Openings)	1/11/1978		
34	CC.S.M. 5.R.45°.1	5' x 4' R.C. Box Culvert (Multiple Openings)	1/5/1978		
35	CC.S.M. 5.R.60°.1	5' x 4' R.C. Box Culvert (Multiple Openings)	1/5/1978		
36	CC.S.M. 5.R.75°.1	5' x 4' R.C. Box Culvert (Multiple Openings)	1/11/1978		
37	CC.S.M.5.R. 90°.1	5' x 4' R.C. Box Culvert (Multiple Openings)	1/11/1978		
38	CC.S.M. 6-7.R. 45°.1	6' x 4', 6' x 5', 7' x 4' R. C. Box Culvert (Multiple Openings)	1/5/1978		
39	CC.S.M. 6-7.R. 60°.1	6' x 4', 6' x 5', 7' x 4' R. C. Box Culvert (Multiple Openings)	1/11/1978		
40	CC.S.M. 6-7. R. 75°.1	6' x 4', 6' x 5', 7' x 4' R. C. Box Culvert (Multiple Openings)	1/5/1978		
41	CC.S.M. 6-8.R.90°.1	6' x 4', 6' x 5', 7' x 4', 7' x 5', 7' x 6', 8' x 5', 8' x 6', R. C. Box Culvert (Multiple Openings)	1/11/1978		
42	CC.S.M. 7-8.R. 45°.1	7' x 5', 7' x 6', 8' x 5', 8' x 6' R. C. Box Culvert (Multiple Openings)	1/11/1978		

* These drawings received administrative updates to the border only. Please see the Standard Plan Index for more information on Standard Plan revisions and effective dates.

PAGE NO.	STANDARD PLAN NUMBER	DESCRIPTION	REVISION DATE	EFFECTIVE FOR THE LETTING OF	OBSOLETE DATE
43	CC.S.M. 7-8.R. 60°.1	7' x 5', 7' x 6', 8' x 5', 8' x 6' R.C. Box Culvert (Multiple Openings)	1/5/1978		
44	CC.S.M. 7-8.R. 75°.1	7' x 5', 7' x 6', 8' x 5', 8' x 6' R.C. Box Culvert (Multiple Openings)	1/11/1978		
45	CC.S.M. 7-10.S.45°.1	7' x7', 8' x 8', 9' x 9', 10' x 10' R.C. Box Culvert (Multiple Openings)	1/11/1978		
46	CC.S.M. 7-10.S.60°.2	7' x 7', 8' x 8', 9' x 9', 10' x 10' R.C. Box Culvert (Multiple Openings)	1/5/1978		
47	CC.S.M. 7-10.S.75°.1	7' x 7', 8' x 8', 9' x 9', 10' x 10' R.C. Box Culvert (Multiple Openings)	1/11/1978		
48	CC.S.M. 7-10.S.90°.1	7' x7', 8' x 8', 9' x 9', 10' x 10' R.C. Box Culvert (Multiple Openings)	1/5/1978		
49	CC.S.M. 8-9.R.90°.1	9' x 7', 9' x 8', 8' x 7', R.C. Box Culvert (Multiple Openings)	1/11/1978		
50	CC.S.M. 10.R.45°.1	10' x 7', 10' x 8', 10' x 9' R.C. Box Culvert (Multiple Openings)	1/11/1978		
51	CC.S.M. 10.R.60°.1	10' x 7', 10' x 8', 10' x 9' R.C. Box Culvert (Multiple Openings)	1/11/1978		
52	CC.S.M. 10.R.90°.1	10' x 7', 10' x 8', 10' x 9' R.C. Box Culvert (Multiple Openings)	1/5/1978		
53	CC.S.S. 4-6.RS.45°.1	4' x 6' span x 3' to 6' height R.C. Box Culvert (Single Opening)	1/11/1978		
54	CC.S.S. 4-7.RS.60°.1	4' to 7' span x 3' to 6' height R.C. Box Culvert (Single Opening)	1/11/1978		
55	CC.S.S. 4-7. RS.75°.1	4' to 7' span x 3' to 6' height R.C. Box Culvert (Single Opening)	1/11/1978		
56	CC.S.S. 4-7.RS.90°.1	4' to 7' span x 3' to 6' height R.C. Box Culvert (Single Opening)	1/5/1978		
57	CC.S.S. 7-10.RS.45°.1	7' to 10' span x 4' to 10' height R.C. Box Culvert (Single Opening)	1/11/1978		
58	CC.S.S. 7-10.RS.60°.1	7' to 10' span x 7' to 10' height R.C. Box Culvert (Single Opening)	1/11/1978		
59	CC.S.S. 7-10.RS.75°.1	7' to 10' span x 7' to 10' height R.C. Box Culvert (Single Opening)	1/11/1978		
60	CC.S.S. 7-10. RS.90°.1	7' to 10' span x 7' to 10' height R.C. Box Culvert (Single Opening)	1/5/1978		
61	CC.S.S. 8-10.R.60°.1	8' to 10' span x 4' to 6' height R.C. Box Culvert (Single Opening)	1/11/1978		
62	CC.S.S. 8-10.R.75°.1	8' to 10' span x 4' to 6' height R.C. Box Culvert (Single Opening)	1/11/1978		
63	CC.S.S. 8-10.R.90°.1	8' to 10' span x 4' to 6' height R.C. Box Culvert (Single Opening)	1/11/1978		
64	CC.S.S. 12.RS.75°.2	12' x 12' R.C. Box Culvert (Single Opening)	1/11/1978		
65	CM-49	Expansion and Construction Joint for Concrete Structures	6/1/2026	12/9/2026*	
66	COLLAR-01	Concrete Collar Detail	6/1/2026	12/9/2026*	
67-69	CP-01	Portland Cement Concrete Pavement Details	6/1/2026	12/9/2026*	
70	CPR-01	Concrete Joints and Cracks Rehab	10/1/2025	1/14/2026	
71	CPR-02	Patching CRCP and PCCP	10/1/2025	1/14/2026	
72	CPR-03	Concrete Rehab Details	1/12/2021	8/10/2022	8/12/2026
73	CPR-03	Concrete Rehab Details	4/8/2026	8/12/2026	
74	CR-01	Cast-In-Place Revetment	12/10/2025	1/14/2026	
75	CS-216	Pre-Cast Prestressed Concrete Piles	11/26/2025	1/14/2026	

* These drawings received administrative updates to the border only. Please see the Standard Plan Index for more information on Standard Plan revisions and effective dates.

PAGE NO.	STANDARD PLAN NUMBER	DESCRIPTION	REVISION DATE	EFFECTIVE FOR THE LETTING OF	OBSOLETE DATE
76	CSF-01	Concrete Surface Finish Class 2 & Class 3	1/8/2026	1/14/2026	
77	DW-01 (1 OF 3)	Driveways on Curbed Roadways	6/1/2026	12/9/2026*	
78	DW-01 (2 OF 3)	Driveways on Non-Curbed Roadways	6/1/2026	12/9/2026*	
79	DW-01 (3 OF 3)	Turnout and Driveway Tie-In Details	6/1/2026	12/9/2026*	
80-81	EC-01	Temporary Erosion Control Details	6/1/2026	12/9/2026*	
82	FN-01	Chain Link Fence & Gates (4, 5, 6, & 7ft)	6/1/2026	12/9/2026*	
83	FN-02 (1 of 2)	Field and Line Type Fence (Wood Post)	6/1/2026	12/9/2026*	
84	FN-02 (2 of 2)	Field and Line Type Fence (Steel Post)	6/1/2026	12/9/2026*	
85	FR-01	Flexible Revetment and Riprap	12/10/2025	1/14/2026	
86-93	GR-201	Highway Guard Rails	6/29/2026	12/9/2026*	
94	GR-MASH-BC	Highway Guard Rail (MASH) Application for Box Culverts	6/29/2026	12/9/2026*	
95	GR-MASH-OFF	Highway Guard Rail (MASH) Off-System Bridge Application	6/29/2026	12/9/2026*	
96-106	GR-MASH-ON	Highway Guard Rail (MASH) On-System Bridge Application	6/29/2026	12/9/2026*	
107	GRR-01	Side Mount Guard Rail (For Box Culverts)	6/29/2026	12/9/2026*	
108	GRR-02	Top Mounted Guard Rail (For Box Culverts)	6/29/2026	12/9/2026*	
109	GRR-03	Anchor Block & Bridge Rail Rehabilitation for Low Concrete Post and Rail	6/29/2026	12/9/2026*	
110	GRR-04	Guard Rail Anchor Block Rehabilitation for Concrete Post & Rail (Alternate 1)	6/29/2026	12/9/2026*	
111	GRR-05	Guard Rail Anchor Block Rehabilitation for Concrete Post & Rail (Alternate 2)	6/29/2026	12/9/2026*	
112	GRR-06	Approach Guard Rail for Structures with Flexible Rails	6/29/2026	12/9/2026*	
113	GRR-07	New Jersey Barrier Rail Retrofit (For Structures Greater than 60 ft. Long)	6/29/2026	12/9/2026*	
114	GRR-08	New Jersey Barrier Rail Retrofit (For Structures Less than 60 ft. Long)	6/29/2026	12/9/2026*	
115	GRR-09	Guard Rail Rehabilitation (Flat Deck Precast Bridges)	6/29/2026	12/9/2026*	
116	GRR-10	Side Mounted Guard Rail for Bridges	6/29/2026	12/9/2026*	
117	GRR-11	Side Mounted Guard Rail (Concrete Deck with Timber Stringers)	6/29/2026	12/9/2026*	
118	GRR-12	Side Mounted Bridge Rail	6/29/2026	12/9/2026*	
119	GRR-13	Guard Rail Terminating On Brush Curb Bridge Rail	6/29/2026	12/9/2026*	
120	GRR-14	Guard Rail Continuous Across Brush Curb Bridge Rail	6/29/2026	12/9/2026*	
121	GRR-15	Guard Rail Rehabilitation (Concrete Deck)	6/29/2026	12/9/2026*	
122	GRR-16	Guard Rail Rehabilitation (Timber Deck)	6/29/2026	12/9/2026*	
123	GRR-17	Bridge Rail Rehabilitation Waskey Bridges	6/29/2026	12/9/2026*	
124	HS-03	Object Markers, Mileposts, and Dead End Road Installations	6/1/2026	12/9/2026*	
125	KG-01	Cattle Guard (Structural Steel)	6/1/2026	12/9/2026*	
126	LD-01	Tree and Shrub Planting Details	12/10/2025	1/14/2026	
127	LD-02	Tree Protection Details for Construction Around Existing Trees	12/10/2025	1/14/2026	
128	LD-03	Plant List	12/10/2025	1/14/2026	
129	LS-01	Typical Landscaping Layout for use with Dead End Road Installations	6/1/2026	12/9/2026*	

* These drawings received administrative updates to the border only. Please see the Standard Plan Index for more information on Standard Plan revisions and effective dates.

PAGE NO.	STANDARD PLAN NUMBER	DESCRIPTION	REVISION DATE	EFFECTIVE FOR THE LETTING OF	OBSOLETE DATE
130-131	MB-01	Mailbox Installation Details	6/1/2026	12/9/2026*	
132-137	MC-01	Details of Grates, Grate Frames and Covers for Catch Basins and Manholes	6/1/2026	12/9/2026*	
138	MH-06	R.C. Manhole, Maximum Dimensions: 11'-10" x 7'-2", Maximum Depth 20'	6/1/2026	12/9/2026*	
139	MISC SPAN-COMMON	Miscellaneous Span Details: Index, Crown, Deck Placement Formwork @ Link Slab	5/12/2021	1/12/2022	
140	MISC DECK-DRAIN	Miscellaneous Span Details: Deck Drains	5/12/2021	1/12/2022	
141-142	MISC JOINT-NP	Miscellaneous Span Details: Sealed Expansion Joint - End Dams and Preformed Neoprene	5/12/2021	1/12/2022	
143-144	MISC JOINT-SC	Miscellaneous Span Details: Sealed Expansion Joint - End Dams and Preformed Silicone	5/12/2021	1/12/2022	
145	MISC JOINT-SC-P	Miscellaneous Span Details: Poured Silicone Joint	5/12/2021	1/12/2022	
146	PC-01	Precast Catch Basins and Manholes	10/14/2025	1/14/2026	
147	PED-01 (1 OF 5)	Pedestrian Facilities: General Notes and Misc. Details	6/1/2026	12/9/2026*	
148	PED-01 (2 OF 5)	Pedestrian Facilities: Curb Ramps and Detectable Warning Location	6/1/2026	12/9/2026*	
149	PED-01 (3 OF 5)	Pedestrian Facilities: Typical Crossing Layouts	6/1/2026	12/9/2026*	
150	PED-01 (4 OF 5)	Pedestrian Facilities: Detectable Warning Surfaces	6/1/2026	12/9/2026*	
151	PED-01 (5 OF 5)	Pedestrian Facilities: Joint Details	6/1/2026	12/9/2026*	
152	PG-DRAIN (DOUBLE)	Double Paved Gutter Drain	6/1/2026	12/9/2026*	
153	PG-DRAIN (SINGLE)	Single Paved Gutter Drain	6/1/2026	12/9/2026*	
154	PG-DRAIN WITH SIDEWALK (DOUBLE)	Double Paved Gutter Drain with Sidewalk	6/1/2026	12/9/2026*	
155	PG-DRAIN WITH SIDEWALK (SINGLE)	Single Paved Gutter Drain with Sidewalk	6/1/2026	12/9/2026*	
156	PM-01	Centerline and Edgeline Markings	2/28/2019	8/14/2019	10/14/2026
157	PM-02	Pavement Word and Symbol Markings for Non-Interstate Use	2/28/2019	8/14/2019	10/14/2026
158	PM-03	Pavement Word and Symbol Markings for Interstate Use	2/28/2019	8/14/2019	10/14/2026
159	PM-04	Auxiliary, Deceleration and Acceleration Lanes and Gore Striping Layouts	2/28/2019	8/14/2019	10/14/2026
160	PM-05	Typical Intersection Striping Layouts	2/28/2019	8/14/2019	10/14/2026
161	PM-06	Lane Reduction and Island Layouts	2/28/2019	8/14/2019	10/14/2026
162	PM-07	Railway Crossing Layout	2/28/2019	8/14/2019	10/14/2026
163	PM-08	Pedestrian/Bike Striping Layout	2/28/2019	8/14/2019	10/14/2026
164	PM-09	Roundabout Striping Layout	2/28/2019	8/14/2019	10/14/2026
165	PM-01	Centerline and Edgeline Markings	3/6/2026	10/14/2026	
166	PM-02	Pavement Word and Symbol Markings for Non-Interstate Use	3/6/2026	10/14/2026	
167	PM-03	Pavement Word and Symbol Markings for Interstate Use	3/6/2026	10/14/2026	
168	PM-04	Auxiliary, Deceleration and Acceleration Lanes and Gore Striping Layouts	3/6/2026	10/14/2026	
169	PM-05	Typical Intersection Striping Layouts	3/6/2026	10/14/2026	
170	PM-06	Lane Reduction and Island Layouts	3/6/2026	10/14/2026	
171	PM-07	Railway Crossing Layout	3/6/2026	10/14/2026	
172	PM-08	Pedestrian/Bike Striping Layout	3/6/2026	10/14/2026	

* These drawings received administrative updates to the border only. Please see the Standard Plan Index for more information on Standard Plan revisions and effective dates.

PAGE NO.	STANDARD PLAN NUMBER	DESCRIPTION	REVISION DATE	EFFECTIVE FOR THE LETTING OF	OBSOLETE DATE
173	PM-09	Roundabout Striping Layout	3/6/2026	10/14/2026	
174	PRCB-01	Precast Reinforced Concrete Box Culverts	6/1/2026	12/9/2026*	
175-187	PSS-45-24-20SL	Reinforced Concrete Pile Bents 24’0” Clear Roadway 45 Crossing Two Way Tangent	12/10/2025	1/14/2026	
188-200	PSS-45-28-20SL	Reinforced Concrete Pile Bents 28’0” Clear Roadway 45 Crossing Two Way Tangent	12/10/2025	1/14/2026	
201-211	PSS-60-24-20SL	Reinforced Concrete Pile Bents 24’0” Clear Roadway 60 Crossing Two Way Tangent	12/10/2025	1/14/2026	
212-222	PSS-60-28-20SL	Reinforced Concrete Pile Bents 28’0” Clear Roadway 60 Crossing Two Way Tangent	12/10/2025	1/14/2026	
223-233	PSS-75-24-20SL	Reinforced Concrete Pile Bents 24’0” Clear Roadway 75 Crossing Two Way Tangent	12/10/2025	1/14/2026	
234-244	PSS-75-28-20SL	Reinforced Concrete Pile Bents 28’0” Clear Roadway 75 Crossing Two Way Tangent	12/10/2025	1/14/2026	
245-255	PSS-90-24-20SL	Reinforced Concrete Pile Bents 24’0” Clear Roadway 90 Crossing Two Way Tangent	12/10/2025	1/14/2026	
256-266	PSS-90-28-20SL	Reinforced Concrete Pile Bents 28’0” Clear Roadway 90 Crossing Two Way Tangent	12/10/2025	1/14/2026	
267	R-CB-11	Concrete Manhole (36” x 36") (10’ Max. Depth)	6/1/2026	12/9/2026*	
268	R-CB-11 MOD	Concrete Manhole (36” x Open Max. Pipe) (10’ Max. Depth)	6/1/2026	12/9/2026*	
269	R-CB-36	Sanitary Sewer R.C. Manhole	6/1/2026	12/9/2026*	
270	R-CB-38	Concrete Open Top Catch Basin (60” x 60” Max. Pipe) (24” Max. Depth)	6/1/2026	12/9/2026*	
271	RCB-EXTENSION	Standard Method for Extending Reinforced Concrete Box Culverts for 90° and Skewed Crossings.	6/1/2026	12/9/2026*	
272	R-CP-100 REV	Alternate Load Transmission Assembly for Expansion and Dummy Joints	6/1/2026	12/9/2026*	
273	RM-01	Right Of Way Monuments	6/1/2026	12/9/2026*	
274	RM-37	Portable Steel Rail Cattle Guard (42# to 45# Deck Rails)	6/1/2026	12/9/2026*	
275	RM-37 Mod.	Portable Steel Rail Cattle Guard (55# Min. Deck Rails)	6/1/2026	12/9/2026*	
276-292	RS-01	Roadside Signing Standards (Sheets 1-17)	10/14/2025	1/14/2026	
293	RW-01	Miscellaneous Retaining Wall Details T & L Types 2’ 0” thru 6’ 0’ Heights	11/26/2025	1/14/2026	
294-295	SAM-1	Metal Pipe Wall Thickness and Connecting Bands, Fill Height for Metal Pipe (Sheet 1)	6/1/2026	12/9/2026*	
296	SC-01	Typical Speed Change Lane for Interstate Highways	11/21/2005		
297	SETSD1	Side Drain Safety End - Type 1	8/19/2026	3/10/2027	
298	SETSD2	Side Drain Safety End - Type 2	8/19/2026	3/10/2027	
299	SETSD3	Side Drain Safety End - Type 3	8/19/2026	3/10/2027	
300	SU-01	Shoulder Underdrains New Construction	10/1/2025	1/14/2026	
301	SU-02	Shoulder Underdrains Retrofit	10/1/2025	1/14/2026	
302	SW-01	Shoulder Wedge	6/1/2026	12/9/2026*	
303	SWBS-100	Steel Wire Bar Supports	6/29/2026	12/9/2026*	
304-318	TS-OH	Overhead Traffic Signs	8/25/2025	1/14/2026	
319	TSD-00	Traffic Signal Details - Sign Notes	10/1/2025	1/14/2026	
320	TSD-01	Traffic Signal Details - Span Wire Installation Details	10/1/2025	1/14/2026	
321	TSD-02	Traffic Signal Details - Strain Pole and Mast Arms 55' & Under	10/1/2025	1/14/2026	
322	TSD-03	Traffic Signal Details - Pole Foundation	10/1/2025	1/14/2026	3/10/2027
323	TSD-03	Traffic Signal Details - Pole Foundation	8/19/2026	3/10/2027	

* These drawings received administrative updates to the border only. Please see the Standard Plan Index for more information on Standard Plan revisions and effective dates.

PAGE NO.	STANDARD PLAN NUMBER	DESCRIPTION	REVISION DATE	EFFECTIVE FOR THE LETTING OF	OBSOLETE DATE
324	TSD-04	Traffic Signal Details - 55' Single, 50'x35' Dual and Over Mast Arm Detail	10/1/2025	1/14/2026	
325	TSD-05	Traffic Signal Details - 55' Single, 50'x35' Dual and Over Mast Arm Pole Foundation Details	10/1/2025	1/14/2026	3/10/2027
326	TSD-05	Traffic Signal Details - 55' Single, 50'x35' Dual and Over Mast Arm Pole Foundation Details	8/19/2026	3/10/2027	
327	TSD-06	Traffic Signal Details - 55' Single, 50'x35' Dual and Over Mast Arm Foundation Details	10/1/2025	1/14/2026	
328	TSD-07	Traffic Signal Details - Wood Pole and Conduit Riser Detail	10/1/2025	1/14/2026	
329	TSD-08	Traffic Signal Details - Signal Mounting Details	10/1/2025	1/14/2026	
330	TSD-09	Traffic Signal Details - Hardware Details	10/1/2025	1/14/2026	
331	TSD-10	Traffic Signal Details - Electrical Service and Wiring Details	10/1/2025	1/14/2026	
332	TSD-11	Traffic Signal Details - Saw Cutting Pavement and Loop Wire Details	10/1/2025	1/14/2026	
333	TSD-12	Traffic Signal Details - Junction Box and Pull Box	10/1/2025	1/14/2026	
334	TSD-13	Traffic Signal Details - Controller Mounting and Foundation Details	10/1/2025	1/14/2026	
335	TTC-00 (A)	Temporary Traffic Control, General Notes Sheet	2/7/2025	6/11/2025	1/13/2027
336	TTC-00 (B)	Temporary Traffic Control, General Notes Sheet	2/7/2025	6/11/2025	1/13/2027
337	TTC-00 (C)	Temporary Traffic Control, General Notes Sheet	2/7/2025	6/11/2025	1/13/2027
338	TTC-00 (D)	Temporary Traffic Control, Layout for Placement of Road Work, Next XX Miles, and End Road Work Signs	2/7/2025	6/11/2025	1/13/2027
339	TTC-01	Temporary Traffic Control, For Work Greater than 15 Feet From the Traveled Way	2/7/2025	6/11/2025	1/13/2027
340	TTC-02	Temporary Traffic Control, Layout For Work Less than 15 Feet From the Traveled Way	2/7/2025	6/11/2025	1/13/2027
341	TTC-03	Temporary Traffic Control, Layout For Lane Closures on Two Lane Roads With Two-Way Traffic Near Intersections (Flagging Operations)	2/7/2025	6/11/2025	1/13/2027
342	TTC-04	Temporary Traffic Control, Layout For Lane Closures on Two Lane Roads With Two-Way Traffic (Flagging Operations)	2/7/2025	6/11/2025	1/13/2027
343	TTC-05	Temporary Traffic Control, For On-Site Diversion With Two-Way Traffic	2/7/2025	6/11/2025	1/13/2027
344	TTC-06	Temporary Traffic Control, For Lane Closures on Four-Lane Undivided Highways	2/7/2025	6/11/2025	1/13/2027
345	TTC-07	Temporary Traffic Control, For Closure of Two Adjacent Lanes On Four-Lane Undivided Highways	2/7/2025	6/11/2025	1/13/2027
346	TTC-08	Temporary Traffic Control, For Median Crossover On Non-Interstate Divided Highways	2/7/2025	6/11/2025	1/13/2027
347	TTC-09	Temporary Traffic Control, For Lane Closures On Divided Highways (Does not Include ramp entrance or exit tapers)	2/7/2025	6/11/2025	1/13/2027
348	TTC-10	Temporary Traffic Control, For Lane and Sidewalk Closures In Urban Areas With Speed Limit Less Than or Equal to 40 MPH)	2/7/2025	6/11/2025	1/13/2027
349	TTC-11	Temporary Traffic Control, For Lane Closure Using Temporary Barrier Rail On Divided Highway (Includes Freeways)	2/7/2025	6/11/2025	1/13/2027
350	TTC-12	Temporary Traffic Control, For Lane Closures Through Ramp Entrance and Exit Tapers	2/7/2025	6/11/2025	1/13/2027
351	TTC-13	Temporary Traffic Control, For Closure of Two Lanes on a Multi-Lane Highway	2/7/2025	6/11/2025	1/13/2027

* These drawings received administrative updates to the border only. Please see the Standard Plan Index for more information on Standard Plan revisions and effective dates.

PAGE NO.	STANDARD PLAN NUMBER	DESCRIPTION	REVISION DATE	EFFECTIVE FOR THE LETTING OF	OBSOLETE DATE
352	TTC-14	Temporary Traffic Control, For Louisiana Left On Interstate Highways	2/7/2025	6/11/2025	1/13/2027
353	TTC-15	Temporary Traffic Control, For Short Duration Closing of Divided Highways	2/7/2025	6/11/2025	1/13/2027
354	TTC-16	Temporary Traffic Control, For Road Closures	2/7/2025	6/11/2025	1/13/2027
355	TTC-17	Temporary Traffic Control, Moving Operations for Interstate and Multi-Lane Roadways	2/7/2025	6/11/2025	1/13/2027
356	TTC-18	Temporary Traffic Control, For Moving Operations On Two-Way Two-Lane Roadways	2/7/2025	6/11/2025	1/13/2027
357	TTC-19	Temporary Traffic Control, For Traffic Signal Installation and Maintenance at an Intersection	2/7/2025	6/11/2025	1/13/2027
358	TTC-00 (A)	Temporary Traffic Control, General Notes Sheet	5/21/2026	1/13/2027	
359	TTC-00 (B)	Temporary Traffic Control, General Notes Sheet	5/21/2026	1/13/2027	
360	TTC-00 (C)	Temporary Traffic Control, General Notes Sheet	5/21/2026	1/13/2027	3/10/2027
361	TTC-00 (C)	Temporary Traffic Control, General Notes Sheet	8/19/2026	3/10/2027	
362	TTC-00 (D)	Temporary Traffic Control, Layout for Placement of Road Work, Next XX Miles, and End Road Work Signs	5/21/2026	1/13/2027	
363	TTC-00 (E)	Temporary Traffic Control, General Notes Sheet	5/21/2026	1/13/2027	
364	TTC-01	Temporary Traffic Control, For Work Greater than 15 Feet From the Traveled Way	5/21/2026	1/13/2027	
365	TTC-02	Temporary Traffic Control, Layout For Work Less than 15 Feet From the Traveled Way	5/21/2026	1/13/2027	
366	TTC-03	Temporary Traffic Control, Layout For Lane Closures on Two Lane Roads With Two-Way Traffic Near Intersections (Flagging Operations)	5/21/2026	1/13/2027	
367	TTC-04	Temporary Traffic Control, Layout For Lane Closures on Two Lane Roads With Two-Way Traffic (Flagging Operations)	5/21/2026	1/13/2027	
368	TTC-05	Temporary Traffic Control, For On-Site Diversion With Two-Way Traffic	5/21/2026	1/13/2027	
369	TTC-06	Temporary Traffic Control, For Lane Closures on Four-Lane Undivided Highways	5/21/2026	1/13/2027	
370	TTC-07	Temporary Traffic Control, For Closure of Two Adjacent Lanes On Four-Lane Undivided Highways	5/21/2026	1/13/2027	
371	TTC-08	Temporary Traffic Control, For Median Crossover On Non-Interstate Divided Highways	5/21/2026	1/13/2027	
372	TTC-09	Temporary Traffic Control, For Lane Closures On Divided Highways (Does not Include ramp entrance or exit tapers)	5/21/2026	1/13/2027	
373	TTC-10	Temporary Traffic Control, For Lane and Sidewalk Closures In Urban Areas With Speed Limit Less Than or Equal to 40 MPH)	5/21/2026	1/13/2027	
374	TTC-11	Temporary Traffic Control, For Lane Closure Using Temporary Barrier Rail On Divided Highway (Includes Freeways)	5/21/2026	1/13/2027	
375	TTC-12	Temporary Traffic Control, For Lane Closures Through Ramp Entrance and Exit Tapers	5/21/2026	1/13/2027	
376	TTC-13	Temporary Traffic Control, For Closure of Two Lanes on a Multi-Lane Highway	5/21/2026	1/13/2027	
377	TTC-14	Temporary Traffic Control, For Louisiana Left On Interstate Highways	5/21/2026	1/13/2027	
378	TTC-15	Temporary Traffic Control, For Short Duration Closing of Divided Highways	5/21/2026	1/13/2027	
379	TTC-16	Temporary Traffic Control, For Road Closures	5/21/2026	1/13/2027	
380	TTC-17	Temporary Traffic Control, Moving Operations for Interstate and Multi-Lane Roadways	5/21/2026	1/13/2027	
381	TTC-18	Temporary Traffic Control, For Moving Operations On Two-Way Two-Lane Roadways	5/21/2026	1/13/2027	

* These drawings received administrative updates to the border only. Please see the Standard Plan Index for more information on Standard Plan revisions and effective dates.

PAGE NO.	STANDARD PLAN NUMBER	DESCRIPTION	REVISION DATE	EFFECTIVE FOR THE LETTING OF	OBSOLETE DATE
382	TTC-19	Temporary Traffic Control, For Traffic Signal Installation and Maintenance at an Intersection	5/21/2026	1/13/2027	
383	WP-01	Right of Way Monument Witness Posts	6/1/2026	12/9/2026*	
384	YP-01	Year Plate for Concrete Structures	10/1/2025	1/14/2026	

* These drawings received administrative updates to the border only. Please see the Standard Plan Index for more information on Standard Plan revisions and effective dates.

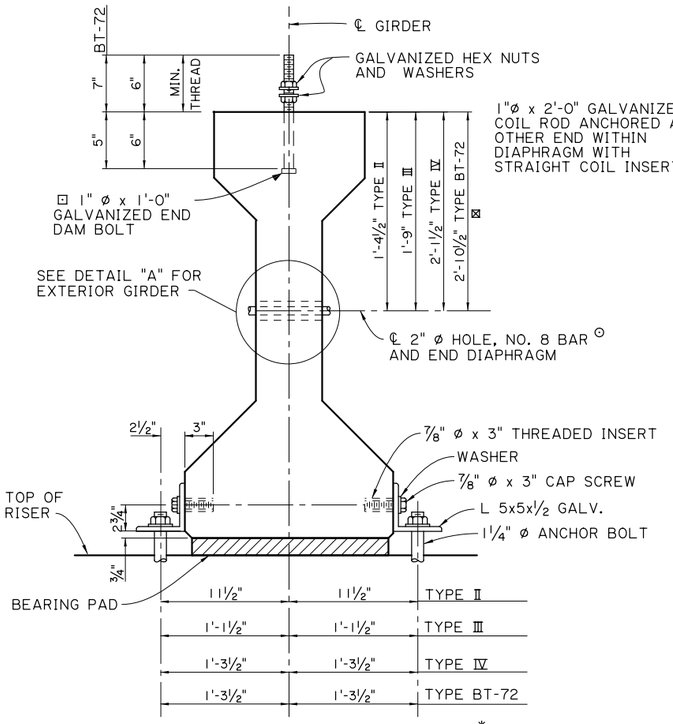

TYPICAL INTERIOR GIRDER END VIEW *

* GIRDER TYPE II - IV SHOWN. GIRDER TYPE BT-72 SIMILAR EXCEPT AS SHOWN.

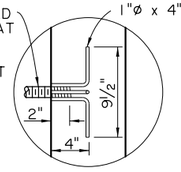

DETAIL A

EXTERIOR GIRDER AT DIAPHRAGMS

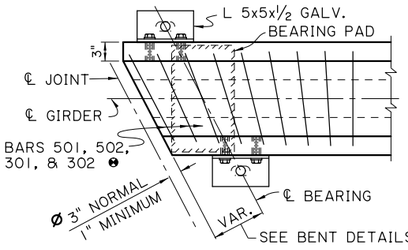

SKEW JOINT AT END AND TRANSITION BENTS *

DETAILS NOT SHOWN ARE SIMILAR TO DETAILS SHOWN TO THE RIGHT

❸ ADJUSTMENT TO STANDARD BAR DIMENSIONS FOR 501, 502, 301, AND 302 WILL BE REQUIRED IN HIGH SKEW ENDS.

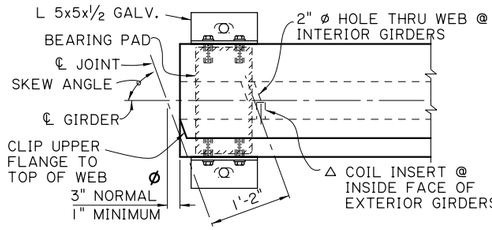

SKEW JOINT AT INTERMEDIATE BENT *

△ SKEW THREADED INSERTS AT GIRDER ENDS ADJACENT TO END BENT WHEN SKEW ANGLE EXCEEDS 15° FROM NORMAL.

ø PERPENDICULAR TO ℄ JOINT.

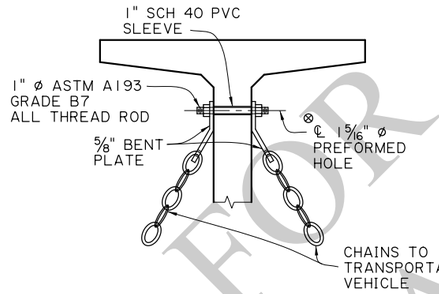

TRANSPORTATION GIRDER BT-72

1. FIELD DRILLING OF HOLES IS NOT PERMITTED.
2. NUMBER & LOCATION OF HOLES TO BE SHOWN ON SHOP DRAWINGS.
3. SUGGESTED METHOD SHOWN ABOVE. SHOW METHOD TO BE USED ON SHOP DRAWINGS.

⊗ 4. AFTER TRANSPORTATION, HOLES IN GIRDER WEB SHALL BE CLEANED OF FORM MATERIAL AND FORM RELEASE MATERIAL, THEN FILLED COMPLETELY WITH A NON-SHRINK GROUT THAT MATCHES OR EXCEEDS THE GIRDER CONCRETE STRENGTH.

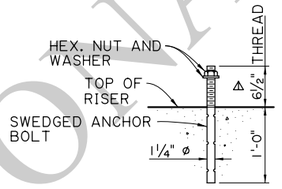

GIRDER BEARING ANCHOR BOLT

△ ASSUMES A MAXIMUM BEARING PAD THICKNESS OF 3". LENGTHEN ANCHOR BOLT FOR THICKER BEARING PADS.

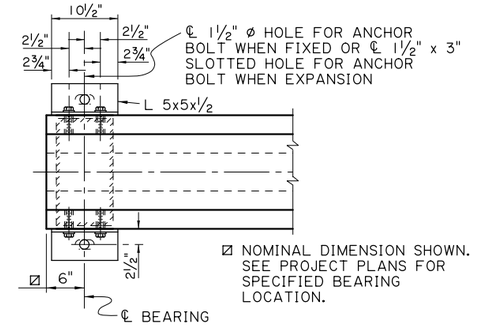

PART PLAN AT END OF GIRDER *

SHOWING BEARING ANCHORAGE DETAILS AND APPLIES ONLY TO GIRDERS TO BE ANCHORED AS SPECIFIED ON PROJECT PLANS.

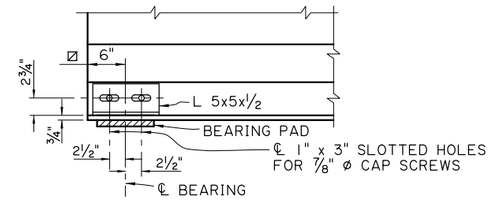

PART ELEVATION OF GIRDER END AT JOINT *

FIXED OR EXPANSION

NOTES - GIRDER:

⊙ 1. 2" ø HOLE FOR INTERIOR GIRDERS AND 1" ø COIL INSERT FOR EXTERIOR GIRDERS ARE REQUIRED AT ℄ INTERMEDIATE DIAPHRAGM WHEN CALLED FOR ON THE PROJECT PLANS.

⊠ 2. THIS DIMENSION MAY BE ADJUSTED TO CLEAR DRAPED STRANDS WHEN NECESSARY AND IS TYPICAL FOR ALL GIRDERS REGARDLESS OF ROADWAY CROWN.

⊡ 3. SEE CONCRETE DECK JOINT DETAILS FOR JOINT ANCHOR BOLTS.

4. COIL INSERTS SHALL BE WILLIAMS TYPE C17-1x4 THIN SLAB LIFTING INSERT OR AN APPROVED EQUAL OR BETTER SOLUTION.

NOTES - BEARING PAD AND ANCHORAGE ASSEMBLY:

1. INSTALL BEARING PADS AT ALL GIRDER ENDS. ALL COSTS ASSOCIATED WITH THE MANUFACTURING, TESTING, SHIPPING, AND PLACING OF BEARINGS WILL BE PAID FOR UNDER THE DESIGNATED BEARING PAD PAY ITEMS.

2. BEARING ANCHORAGE ASSEMBLY CONSISTING OF ANGLES, CAP SCREWS, WASHERS, THREADED INSERTS, AND ANCHOR BOLTS, ARE REQUIRED ONLY ON GIRDER ENDS SPECIFIED IN THE PROJECT PLANS TO BE ANCHORED.

3. WASHERS AND CAP SCREWS AT BEARING ANCHORAGE ASSEMBLY ARE TO BE GALVANIZED. AT THE CONTRACTOR'S OPTION, THREADED INSERTS AT BEARING ASSEMBLY MAY BE GALVANIZED OR ELECTROPLATED AND COVERED WITH GREASE. ALL STEEL CLIP ANGLES SHALL BE HOT-DIPPED GALVANIZED IN ACCORDANCE WITH THE SPECIFICATIONS.

   DAMAGED GALVANIZED COATS THAT ARE NOT TO BE EMBEDDED IN MORE THAN THREE INCHES OF CONCRETE SHALL BE REPAIRED IN ACCORDANCE WITH THE SPECIFICATIONS.

NOTES - PAYMENT:

1. MATERIALS TO BE INCLUDED IN PRICE BID PER LINEAR FOOT OF PRECAST-PRESTRESSED CONCRETE GIRDERS ARE LISTED ON SHEETS 2 & 3 OF 3.

INDEX

SERIES	DESCRIPTION
1 OF 3	GIRDER HARDWARE AND BEARING PADS
2 OF 3	MILD STEEL REINFORCEMENT
3 OF 3	WELDED WIRE FABRIC REINFORCEMENT

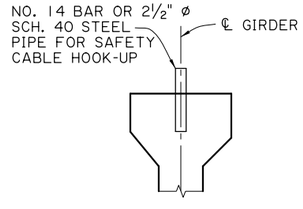

* ALL GIRDERS

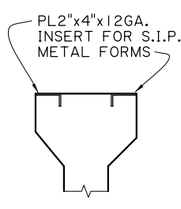

* INTERIOR GIRDER

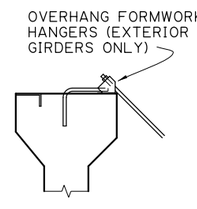

* EXTERIOR GIRDER

ELEVATION - TOP FLANGE SHOWING MISC. ATTACHMENTS

FOR INFORMATIONAL USE

SHEET NUMBER

PARISH | CONTROL SECTION | STATE PROJECT

DESIGN A.LANCASTER | DETAIL A. WILLIAMS | REVIEW K. KEMP | SERIES # 1 OF 3

CHECK K. KEMP | CHECK X. WANG | REVIEW K. KEMP

APPROVED BY CHIEF ENGINEER: DATE: 12/01/2025

REVISION OR CHANGE ORDER DESCRIPTION | BY | DATE | NO.

STATE OF LOUISIANA DEPARTMENT OF TRANSPORTATION AND DEVELOPMENT

AASHTO GIRDER DETAILS

GIRDER HARDWARE AND BEARING PADS

AASHTO GIRDERS

DOTD LOUISIANA DEPARTMENT OF TRANSPORTATION & DEVELOPMENT

STANDARD PLAN

12/8/2025 07:3

IP_PWP:d1243944\BD.2.2.2.0.01 - AASHTO Girders 01.dgn

12/8/2025 07:3

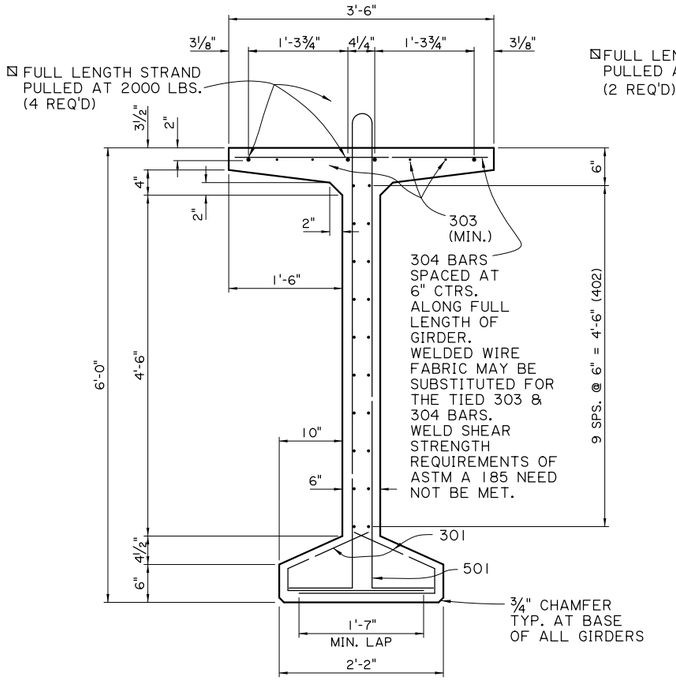

TYPE BT-72
SHOWING END REINFORCEMENT

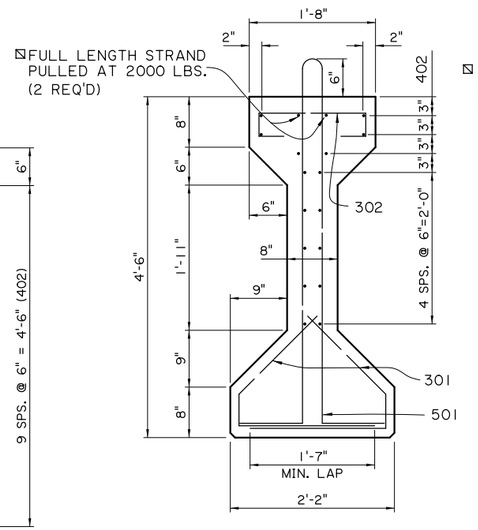

TYPE IV
SHOWING END REINFORCEMENT

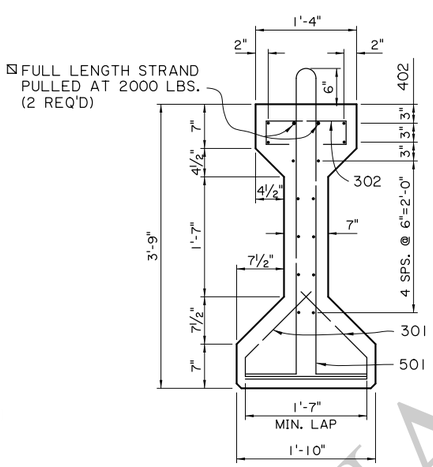

TYPE III
SHOWING END REINFORCEMENT

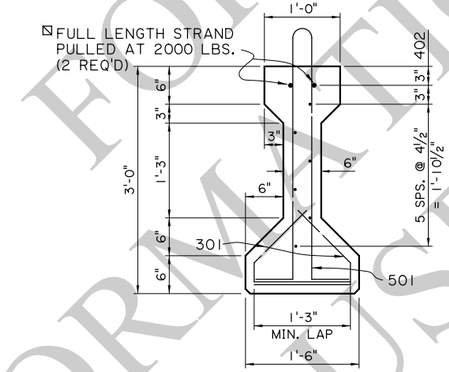

TYPE II
SHOWING END REINFORCEMENT

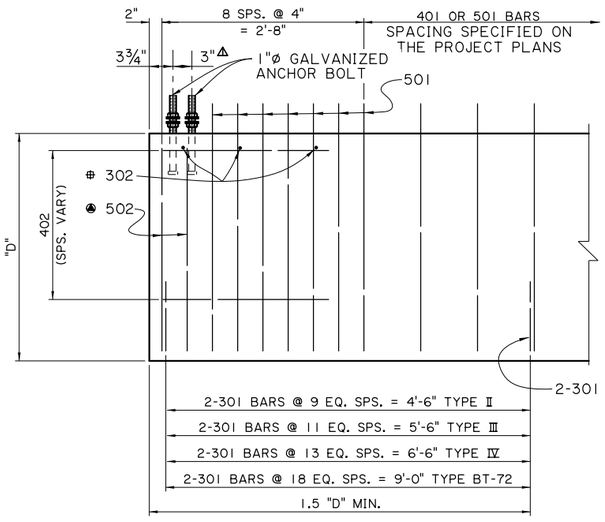

TYPICAL GIRDER END

▲ USE 501 IN LIEU OF 502 @ CONTINUITY ENDS OF GIRDERS.

✠ 3-302 REQUIRED AT EACH END OF GIRDER FOR TYPE III & IV

△ 3" DIMENSION MAY BE ADJUSTED SLIGHTLY TO AVOID CONFLICT WITH STEEL REINFORCEMENT.

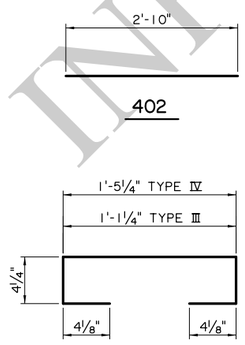

302
1½" ø PIN

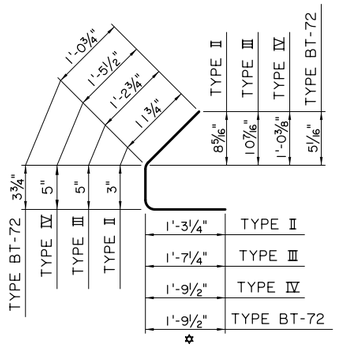

301
(1½"ø PIN)

✠ MINIMUM LAP (SEE GIRDER SECTIONS) WILL REQUIRE ADJUSTMENT TO STANDARD BAR DIMENSIONS IN HIGH SKEW ENDS.

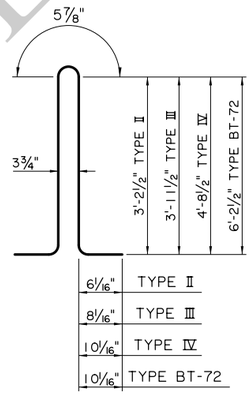

401
2¾"ø PIN

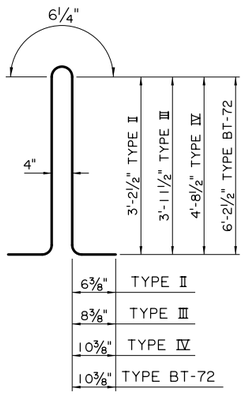

501
2¾"ø PIN

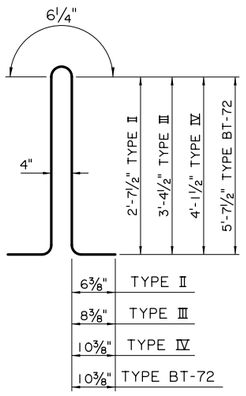

502
2¾"ø PIN

PRESTRESSED GIRDER NOTES

1. FABRICATE IN ACCORDANCE WITH THE SPECIFICATIONS.
2. UNLESS OTHERWISE NOTED IN THE PLANS, PRESTRESSING STEEL SHALL BE 0.6"ø NOMINAL DIAMETER, UNCOATED, SEVEN-WIRE STRANDS, GRADE 270, CONFORMING TO ASTM DESIGNATION A 416M, AND SHALL BE LOW-RELAXATION WITH AN INITIAL APPLIED FORCE OF 43,950 POUNDS.
3. CONCRETE IN PRECAST-PRESTRESSED CONCRETE GIRDERS SHALL BE CLASS P2 CONCRETE WITH A MINIMUM COMPRESSIVE STRENGTH OF 6,500 P.S.I. AT RELEASE OF STRANDS AND 8,500 P.S.I. AT 28 DAYS, OR AS CALLED FOR IN THE PROJECT PLANS.
4. SHOW METHOD OF HOLDING DRAPED STRANDS IN PLACE AND SCHEDULE FOR RELEASE OF HOLD-DOWNS AND STRANDS ON THE SHOP DRAWINGS. PRESTRESSED GIRDERS SHALL BE MAINTAINED IN AN UPRIGHT POSITION AT ALL TIMES DURING STORAGE AND HANDLING AND SUPPORTED FROM POINTS WITHIN 3'-0" OF GIRDER ENDS. DISREGARDING THIS REQUIREMENT MAY LEAD TO COLLAPSE OF THE MEMBER.
5. DIMENSIONS SHOWN ON REINFORCING BAR DETAILS ARE OUT-TO-OUT OF BAR. REINFORCING STEEL FOR PRECAST-PRESTRESSED CONCRETE GIRDERS SHALL BE FABRICATED TO CLOSE DIMENSIONAL TOLERANCES TO PROVIDE ONE (1) INCH MINIMUM CLEARANCE FROM EDGE OF BAR TO FACE OF GIRDER.
6. CAMBER SHOWN ELSEWHERE IN THE PLANS IS APPROXIMATE AND ASSUMES DECK PLACEMENT 90 DAYS AFTER STRAND RELEASE. CAST GIRDERS NO MORE THAN 90 DAYS BEFORE DECK PLACEMENT. ANY ADJUSTMENTS REQUIRED DUE TO AN INCREASE IN CAMBER FROM THE VALUES SHOWN SHALL BE MADE AT NO ADDITIONAL COST OR TIME TO THE DEPARTMENT.
7. MEASUREMENT WILL BE LINEAR FOOT OF PRECAST-PRESTRESSED CONCRETE GIRDER IN PLACE. THE FOLLOWING MATERIALS WILL BE PAID FOR IN THE PRICE BID PER LINEAR FOOT OF GIRDER:

   CLASS P2 CONCRETE, REINFORCING STEEL AND PRESTRESSING STRANDS, ANCHOR BOLTS, NUTS, AND WASHERS FOR END DAM ANCHORAGE, THREADED INSERTS, COIL INSERTS, WASHERS, CAP SCREWS, S.I.P. METAL FORM INSERTS, OVERHANG FORMWORK HANGERS, STEEL PIPE FOR SAFETY CABLE, AND L 5x5x½ AT BEARING ASSEMBLY.

▲ 8. ⅜" ø PRESTRESSING STRANDS STRESSED TO A MAXIMUM OF 2,000 POUNDS MAY BE SUBSTITUTED FOR BARS 303.

FOR INFORMATIONAL USE

DETAIL SCALE: 1" = 1'-0"

SHEET NUMBER		
PARISH	CONTROL SECTION	STATE PROJECT
DESIGN A.LANCASTER	DETAIL A. WILLIAMS	REVIEW K. KEMP
CHECK K. KEMP	CHECK X. WANG	SERIES # 2 OF 3

APPROVED BY CHIEF ENGINEER: DATE: 12/07/2025

NO.	DATE	REVISION OR CHANGE ORDER DESCRIPTION	BY

STATE OF LOUISIANA DEPARTMENT OF TRANSPORTATION & DEVELOPMENT

AASHTO GIRDER DETAILS

MILD STEEL REINFORCEMENT

AASHTO GIRDERS

DOTD LOUISIANA DEPARTMENT OF TRANSPORTATION & DEVELOPMENT

STANDARD PLAN

IP_PWP:d1243944\BD.2.2.2.0.02 - AASHTO Girders 02.dgn

07:4
12/8/2025

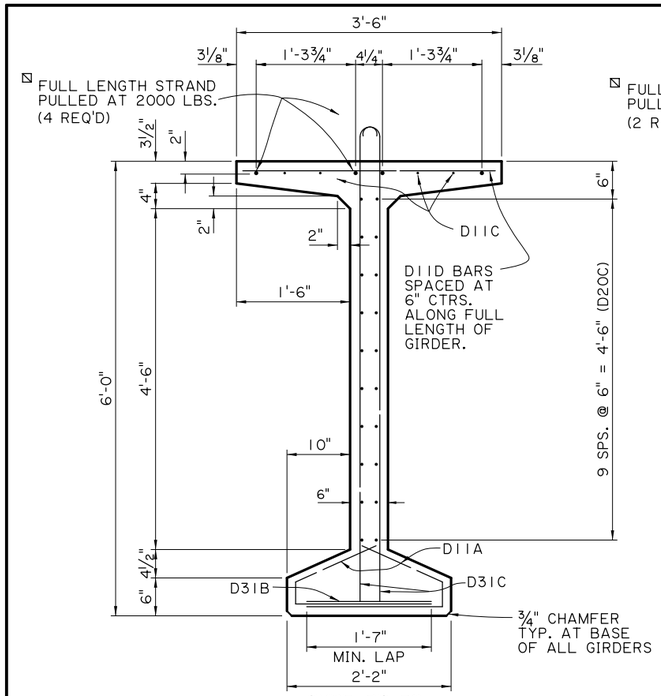

TYPE BT-72
SHOWING END REINFORCEMENT

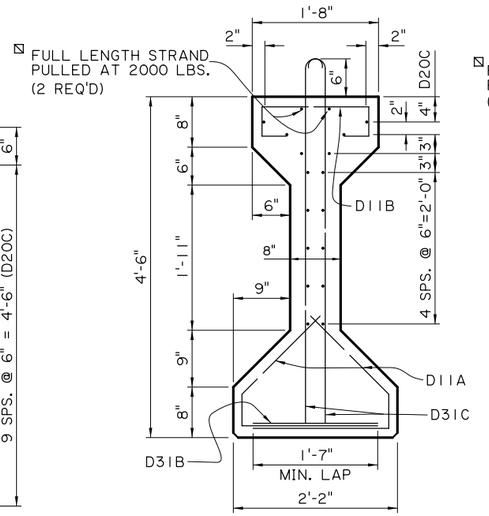

TYPE IV
SHOWING END REINFORCEMENT

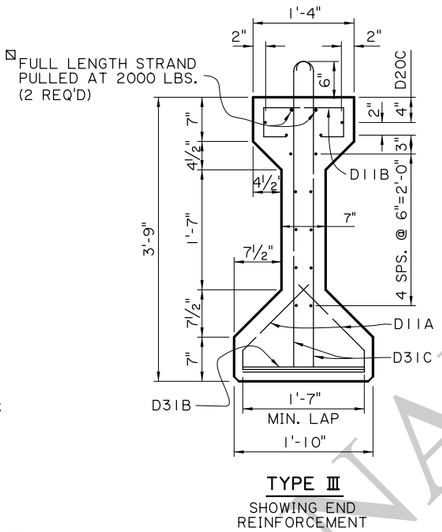

TYPE III
SHOWING END REINFORCEMENT

PRESTRESSED GIRDER NOTES

1. FABRICATE IN ACCORDANCE WITH THE SPECIFICATIONS.
2. UNLESS OTHERWISE NOTED IN THE PLANS, PRESTRESSING STEEL SHALL BE 0.6"ø NOMINAL DIAMETER, UNCOATED, SEVEN-WIRE STRANDS, GRADE 270, CONFORMING TO ASTM DESIGNATION A 416M, AND SHALL BE LOW-RELAXATION WITH AN INITIAL APPLIED FORCE OF 43,950 POUNDS.
3. CONCRETE IN PRECAST-PRESTRESSED CONCRETE GIRDERS SHALL BE CLASS P2 CONCRETE WITH A MINIMUM COMPRESSIVE STRENGTH OF 6,500 P.S.I. AT RELEASE OF STRANDS AND 8,500 P.S.I. AT 28 DAYS, OR AS CALLED FOR IN THE PROJECT PLANS.
4. SHOW METHOD OF HOLDING DRAPED STRANDS IN PLACE AND SCHEDULE FOR RELEASE OF HOLD-DOWNS AND STRANDS ON THE SHOP DRAWINGS. PRESTRESSED GIRDERS SHALL BE MAINTAINED IN AN UPRIGHT POSITION AT ALL TIMES DURING STORAGE AND HANDLING AND SUPPORTED FROM POINTS WITHIN 3'-0" OF GIRDER ENDS. DISREGARDING THIS REQUIREMENT MAY LEAD TO COLLAPSE OF THE MEMBER.
5. WELDED WIRE FABRIC FOR PRECAST PRE-STRESSED CONCRETE GIRDERS SHALL CONFORM TO ASTM DESIGNATIONS A496 & A497. WWF SHALL BE FABRICATED TO CLOSE DIMENSIONAL TOLERANCES TO PROVIDE ONE (1) INCH MINIMUM CLEARANCE FROM EDGE OF BAR TO FACE OF GIRDER. DIMENSIONS SHOWN ON WELDED WIRE DIMENSIONS ARE OUT-TO-OUT OF BAR.
6. CAMBER SHOWN ELSEWHERE IN THE PLANS IS APPROXIMATE AND ASSUMES DECK PLACEMENT 90 DAYS AFTER STRAND RELEASE. CAST GIRDERS NO MORE THAN 90 DAYS BEFORE DECK PLACEMENT. ANY ADJUSTMENTS REQUIRED DUE TO AN INCREASE IN CAMBER FROM THE VALUES SHOWN SHALL BE MADE AT NO ADDITIONAL COST OR TIME TO THE DEPARTMENT.
7. MEASUREMENT WILL BE LINEAR FOOT OF PRECAST-PRESTRESSED CONCRETE GIRDER IN PLACE. THE FOLLOWING MATERIALS WILL BE PAID FOR IN THE PRICE BID PER LINEAR FOOT OF GIRDER:

   CLASS P2 CONCRETE, REINFORCING STEEL AND PRESTRESSING STRANDS, ANCHOR BOLTS, NUTS, AND WASHERS FOR END DAM ANCHORAGE, THREADED INSERTS, COIL INSERTS, WASHERS, CAP SCREWS S.I.P. METAL FORM INSERTS, OVERHANG FORMWORK HANGERS, STEEL PIPE FOR SAFETY CABLE, AND L 5x5x½ AT BEARING ASSEMBLY.

☒ 8. ⅜" ø PRESTRESSING STRANDS STRESSED TO A MAXIMUM OF 2,000 POUNDS MAY BE SUBSTITUTED FOR WWF BARS D11C.

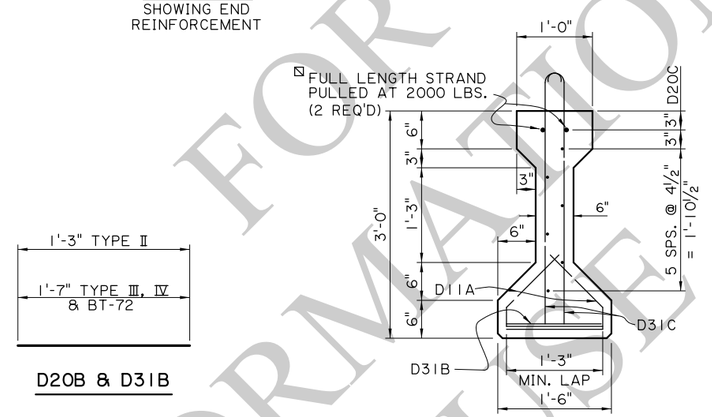

TYPE II
SHOWING END REINFORCEMENT

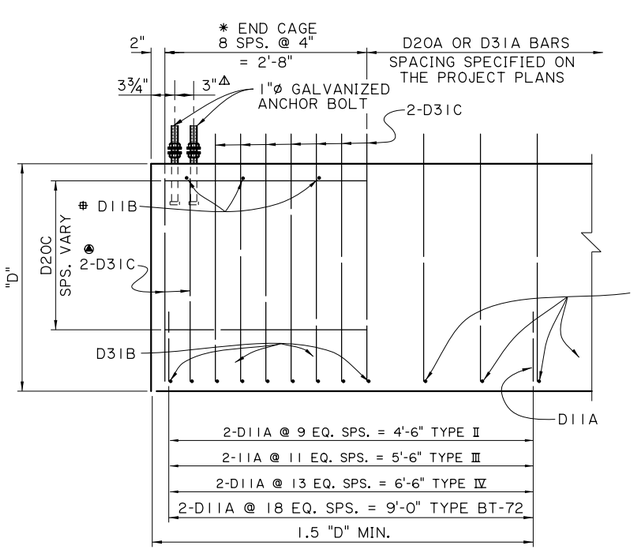

TYPICAL GIRDER END

D20B & D31B

D20C

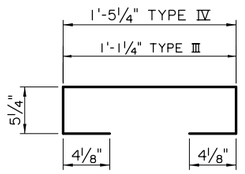

D11B
1½" ø PIN

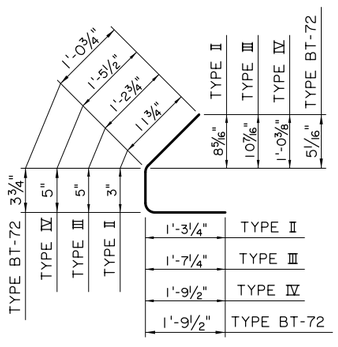

D11A
1½"ø PIN

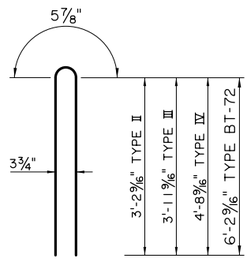

D20A
2¾"ø PIN

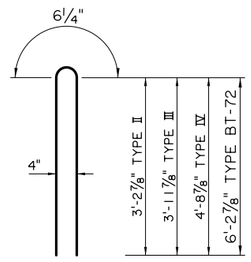

D31A
2¾"ø PIN

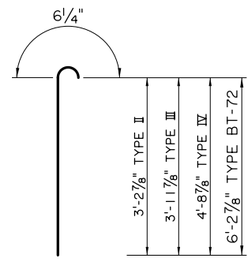

D31C
2¾"ø PIN

- ✱ END CAGE
- ⚠ 3" DIMENSION MAY BE ADJUSTED SLIGHTLY TO AVOID CONFLICT WITH STEEL REINFORCEMENT.
- ⊕ D11B BARS REQUIRED AT EACH END OF GIRDER FOR TYPE III & IV.
- ✪ D31C BARS SHORTENED BY 7" AT ANCHOR BOLT LOCATIONS.

DETAIL SCALE: 1" = 1'-0"

FOR INFORMATIONAL USE

SHEET NUMBER		
PARISH	CONTROL SECTION	STATE PROJECT
DESIGN A.L.LANCASTER	DETAIL A. WILLIAMS	REVIEW K. KEMP
CHECK K. KEMP	CHECK X. WANG	SERIES # 3 OF 3

APPROVED BY CHIEF ENGINEER: DATE: 12/01/2025

NO.	DATE	REVISION OR CHANGE ORDER DESCRIPTION	BY

STATE OF LOUISIANA
JOHN BEL EDWARDS
GOVERNOR

AASHTO GIRDER DETAILS

WELDED WIRE FABRIC REINFORCEMENT

AASHTO GIRDERS

DOTD
LOUISIANA DEPARTMENT OF TRANSPORTATION & DEVELOPMENT

STANDARD PLAN

IP_PWP:d1243944\BD.2.2.2.0.03 - AASHTO Girders 03.dgn

Ø MINIMUM TRENCH CLEARANCE		
TYPE OF STRUCTURE	INSIDE DIAMETER	MIN. CLEARANCE
REINFORCED CONCRETE	ALL	18"
FLEXIBLE PIPE	<48"	18"
FLEXIBLE PIPE	≥48"	24"

⊗ MINIMUM BEDDING MATERIAL THICKNESS UNDER STRUCTURE IS 6 INCHES UNLESS OTHERWISE SHOWN ON PLANS OR AS DIRECTED BY THE PE.

⚠ NO BEDDING MATERIAL REQUIRED UNLESS OTHERWISE SPECIFIED ON THE PLANS OR AS DIRECTED BY THE PE.

✪ REFER TO NOTE 3 ON SHEET 1 OF THIS SERIES.

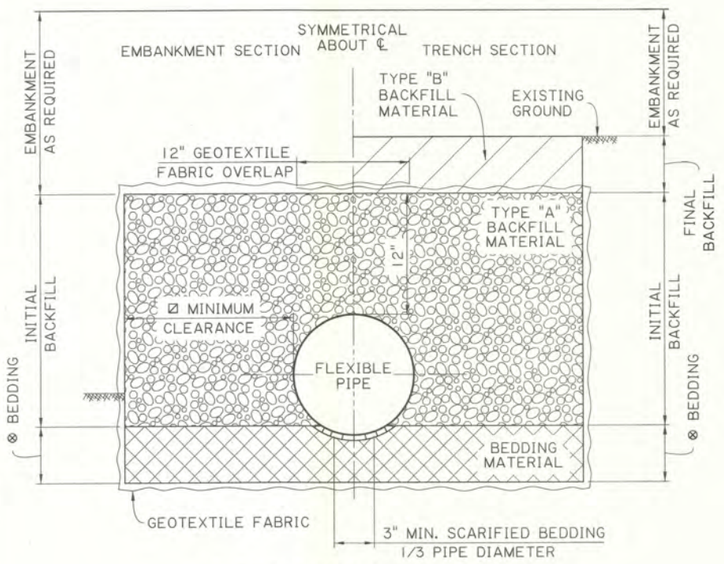

FLEXIBLE PIPE CROSS DRAIN

TRENCH AND EMBANKMENT INSTALLATIONS
SCALE: 1½"=1'-0"

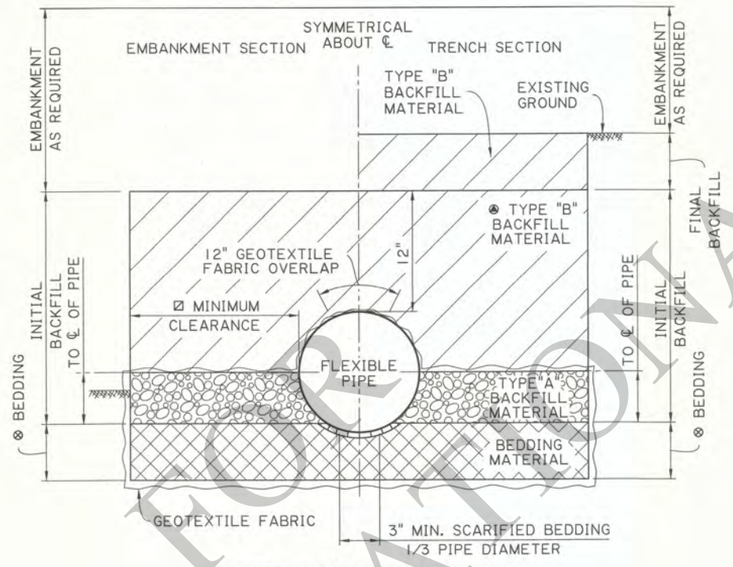

FLEXIBLE PIPE STORM DRAIN

TRENCH AND EMBANKMENT INSTALLATIONS
SCALE: 1½"=1'-0"

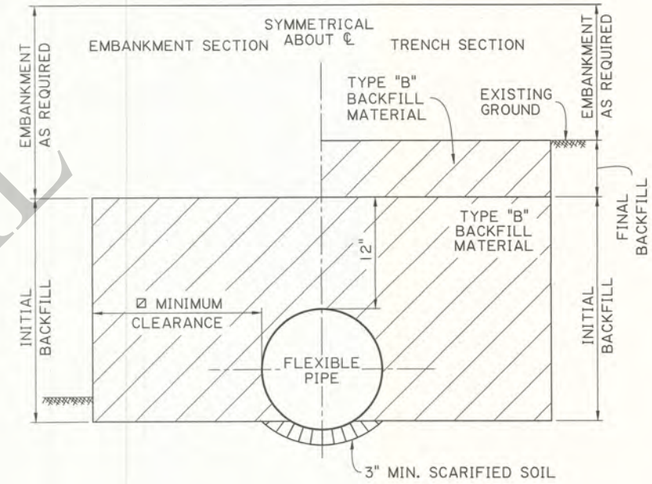

⚠ FLEXIBLE PIPE SIDE DRAIN

TRENCH AND EMBANKMENT INSTALLATIONS
SCALE: 1½"=1'-0"

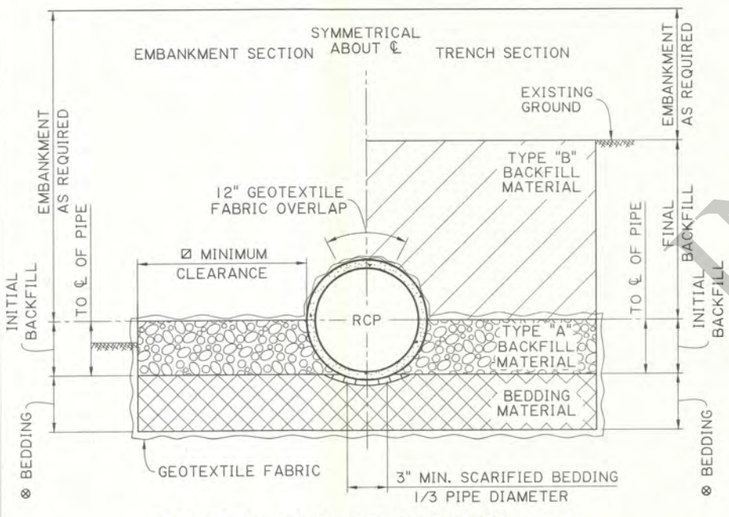

REINFORCED CONCRETE PIPE CROSS DRAIN

TRENCH AND EMBANKMENT INSTALLATIONS
SCALE: 1½"=1'-0"

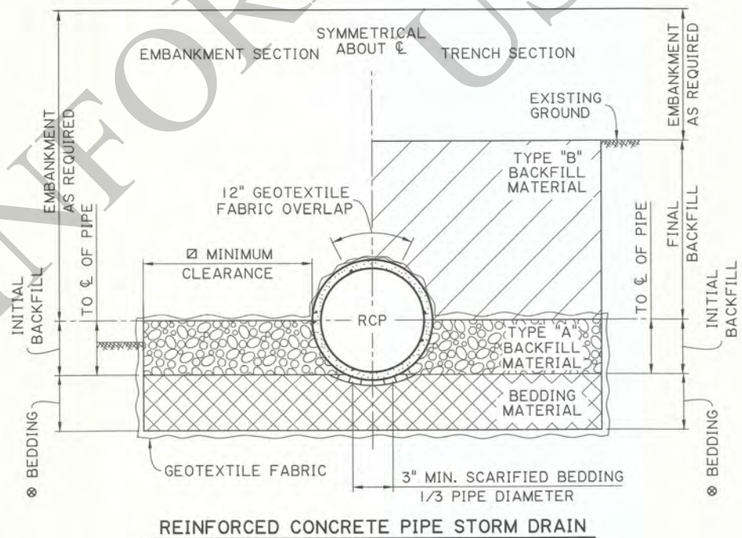

REINFORCED CONCRETE PIPE STORM DRAIN

TRENCH AND EMBANKMENT INSTALLATIONS
SCALE: 1½"=1'-0"

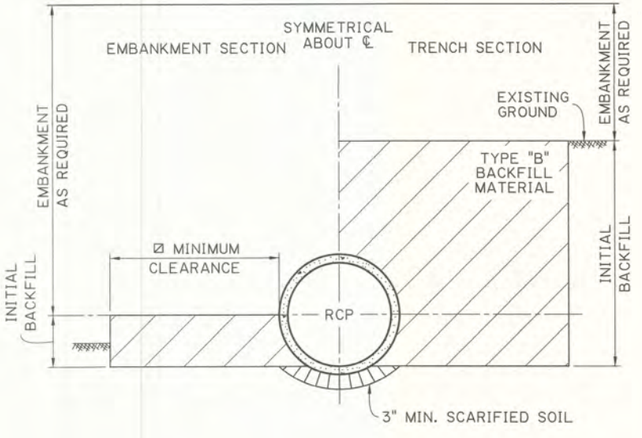

⚠ REINFORCED CONCRETE PIPE SIDE DRAIN

TRENCH AND EMBANKMENT INSTALLATIONS
SCALE: 1½"=1'-0"

FOR INFORMATIONAL USE

SHEET NUMBER

PARISH | CONTROL SECTION | STATE PROJECT

DESIGN C. NICKEL
CHECK J. RAUSER
DETAIL L. HASTINGS
CHECK A.NICKEL
REVIEW C. NICKEL
SERIES # 2 OF 2

APPROVED BY CHIEF ENGINEER:

DATE: 6/1/2026

NO. | DATE | REVISION OR CHANGE ORDER DESCRIPTION | BY

STATE OF LOUISIANA DEPARTMENT OF TRANSPORTATION AND DEVELOPMENT

DRAINAGE STRUCTURES

TYPICAL SECTIONS FOR CROSS DRAINS & SIDE DRAINS

BM-01

DOTD LOUISIANA DEPARTMENT OF TRANSPORTATION & DEVELOPMENT

STANDARD PLAN

GENERAL NOTES :

1. REINFORCED CONCRETE PIPE AND FLEXIBLE PIPE ARE SHOWN AS TYPICAL STRUCTURES. DETAILS ALSO APPLY TO REINFORCED CONCRETE BOX CULVERT, REINFORCED CONCRETE PIPE ARCH, CORRUGATED METAL PIPE ARCH, AND CORRUGATED STRUCTURAL PLATE STRUCTURES.
2. CONSTRUCTION COVER REQUIREMENTS MAY EXCEED FINAL COVER.
3. CROSS DRAIN DETAILS APPLY TO ALL REACHES OF PIPE UNDER RIGID OR FLEXIBLE ROADWAYS.
4. FOR STRUCTURES INSTALLED OUTSIDE THE LIMITS OF THE ROADWAY, THE 12" OF FINAL BACKFILL ABOVE TYPE B BACKFILL UP TO THE EXISTING GROUND SHALL BE PLASTIC SOIL BLANKET MATERIAL. IF THE EMBANKMENT TO BE INSTALLED IS GREATER THAN 12" ABOVE EXISTING GROUND IN THE AREA OVER THE STRUCTURE, THEN THE PLASTIC SOIL BLANKET IS NOT REQUIRED AND TYPE B BACKFILL MAY EXTEND TO EXISTING GROUND.

Ø MINIMUM TRENCH CLEARANCE		
TYPE OF STRUCTURE	INSIDE DIAMETER	MIN. CLEARANCE
REINFORCED CONCRETE	ALL	18"
FLEXIBLE PIPE	<48"	18"
FLEXIBLE PIPE	≥48"	24"

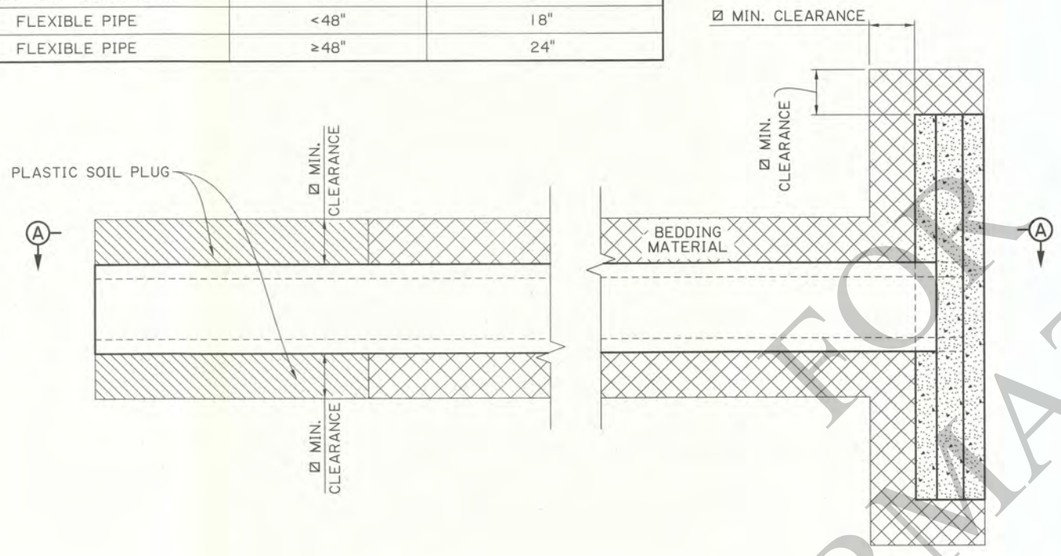

TYPICAL CROSS DRAIN INSTALLATION
WITH AND WITHOUT HEADWALL
(EMBANKMENT MATERIAL NOT SHOWN FOR CLARITY)
NTS

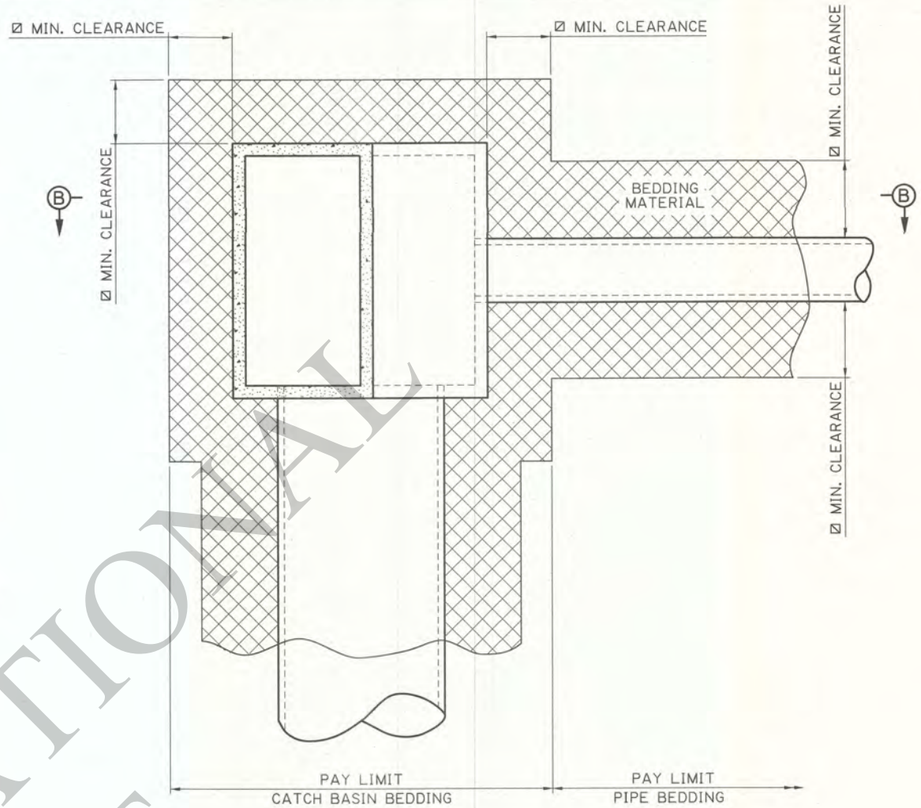

TYPICAL CATCH BASIN AND STORM DRAIN INSTALLATION
NTS

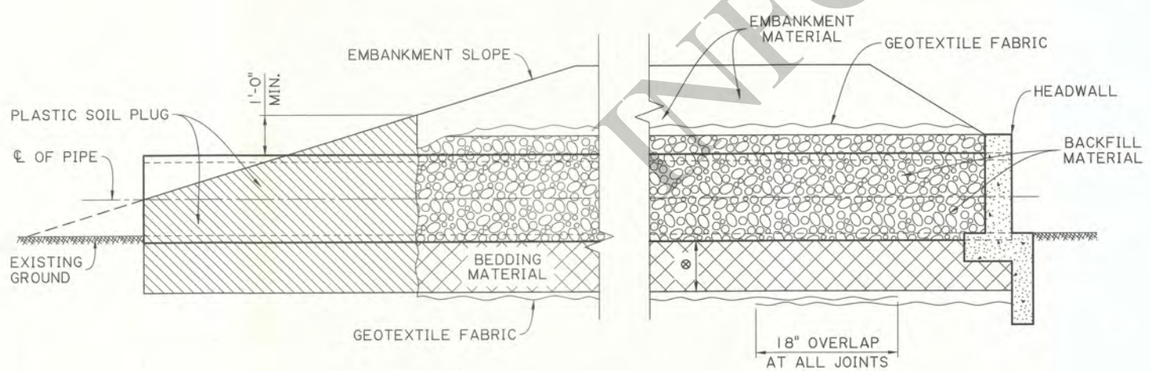

SECTION A-A
WITH AND WITHOUT HEADWALL
NTS

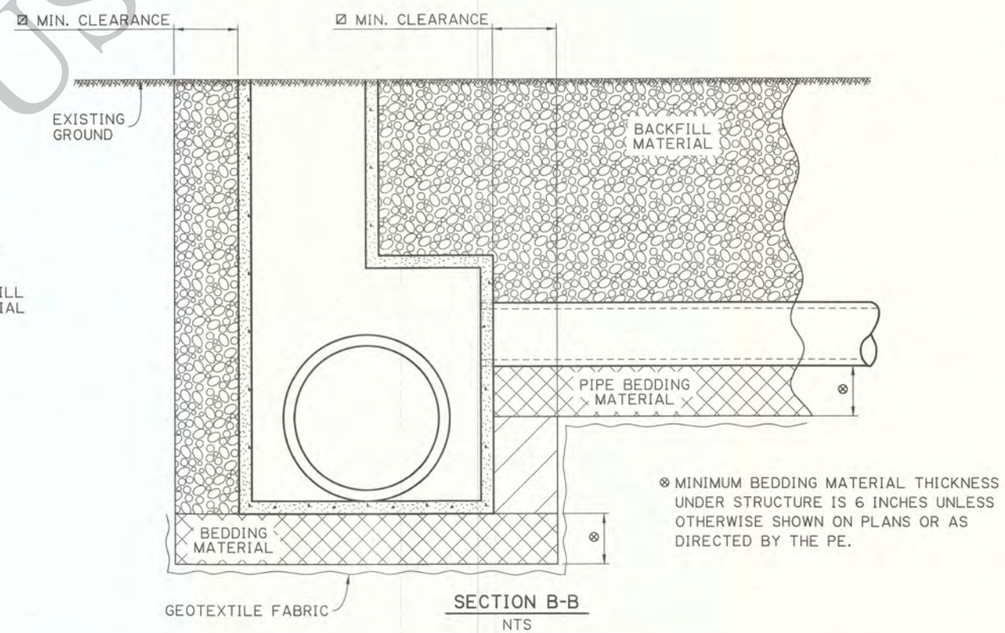

SECTION B-B
NTS

⊗ MINIMUM BEDDING MATERIAL THICKNESS UNDER STRUCTURE IS 6 INCHES UNLESS OTHERWISE SHOWN ON PLANS OR AS DIRECTED BY THE PE.

FOR INFORMATIONAL USE

SHEET NUMBER

PARISH | CONTROL SECTION | STATE PROJECT

DESIGN C. NICKEL
CHECK J. RAUSER
DETAIL L. HASTINGS
CHECK A. NICKEL
REVIEW C. NICKEL
SERIES # 1 OF 2

APPROVED BY CHIEF ENGINEER:
DATE: 6/1/2026

NO.	DATE	REVISION OR CHANGE ORDER DESCRIPTION	BY

STATE OF LOUISIANA

DRAINAGE STRUCTURES
BEDDING & BACKFILL
BM-01

DOTD
LOUISIANA DEPARTMENT OF TRANSPORTATION & DEVELOPMENT

STANDARD PLAN

11/25/2025 10:2:

BRIDGE BARRIER GENERAL NOTES

1. CONSTRUCTION SPECIFICATIONS: CONSTRUCTION SHALL BE IN ACCORDANCE WITH THE LOUISIANA DEPARTMENT OF TRANSPORTATION AND DEVELOPMENT STANDARD SPECIFICATIONS FOR ROADS AND BRIDGES , LATEST APPROVED EDITION, EXCEPT AS SUPPLEMENTED OR AMENDED BY THE PLANS, SUPPLEMENTAL SPECIFICATIONS, AND/OR SPECIAL PROVISIONS.

2. CONCRETE: BRIDGE BARRIER RAILING CONCRETE, INCLUDING ANY BARRIER RAILING TRANSITIONS, SHALL CONFORM WITH THE SPECIFICATIONS. UNLESS NOTED OTHERWISE, ALL EXPOSED EDGES OF BARRIER RAILING CONCRETE SHALL BE CHAMFERED $^{3}/_{4}$".

3. BASIS OF PAYMENT: ALL CONCRETE AND REINFORCING STEEL IN BRIDGE BARRIER RAILING AND BARRIER RAILING TRANSITIONS SHALL BE PAID FOR PER LINEAR FOOT OF RAILING, INCLUDING BARS THAT PROJECT INTO THE BARRIER RAILING OR TRANSITIONS FROM THE WINGWALL OR DECK. BARRIER RAILING TO BE MEASURED FROM CENTERLINE TO CENTERLINE OF JOINTS. SEE GENERAL PLAN OR SUMMARY OF ESTIMATED QUANTITIES SHEETS FOR BARRIER RAILING TYPES AND PAY ITEM NUMBERS.

4. CONSTRUCTION JOINT: REQUIRED CONSTRUCTION JOINT BETWEEN BRIDGE BARRIER RAILING AND DECK SLAB SHALL BE POURED IN ACCORDANCE WITH THE SPECIFICATIONS.

5. FINISH OF CONCRETE: ALL CONCRETE SURFACES SHALL BE FINISHED IN ACCORDANCE WITH THE SPECIFICATIONS.

6. REINFORCING STEEL: REINFORCING STEEL SHALL CONFORM TO THE SPECIFICATIONS. THE FIRST DIGIT(S) OF THE REINFORCING BAR NUMBER INDICATE(S) BAR SIZE. UNLESS NOTED OTHERWISE, DIMENSIONS RELATING TO REINFORCING STEEL FABRICATION ARE OUT-TO-OUT OF BARS AND DIMENSIONS RELATED TO REINFORCING STEEL SPACING ARE CENTER-TO-CENTER OF BARS.

   THE MINIMUM COVERING FROM THE SURFACE OF THE BARRIER RAILING CONCRETE TO THE FACE OF ANY DEFORMED REINFORCING BAR SHALL NOT BE LESS THAN $1^{1}/_{2}$". WHEN GALVANIZED OR STAINLESS REINFORCING STEEL IS REQUIRED IN THE BRIDGE DECK, LONGITUIDINAL BARS AND STIRRUPS IN THE BARRIER RAIL SHALL HAVE THE SAME PROTECTION.

7. BARRIER JOINTS: ALL BARRIER JOINTS SHALL CONFORM TO THE SPECIFICATIONS. SEE BRIDGE GENERAL PLAN FOR SPACING OF OPEN JOINTS.

   AT SPAN EXPANSION JOINTS, GAPS BETWEEN ADJACENT SECTIONS OF BARRIERS SHALL NOT EXCEED 4" UNLESS A SLIDING ARMORED PLATE IS EMPLOYED TO SHIELD THE OPENING.

8. DECK DRAINAGE: SEE PROJECT PLANS AND DRAIN DETAILS FOR LOCATIONS AND TYPE OF DECK DRAINAGE.

9. GUARD RAIL: FOR ADDITIONAL GUARD RAIL DETAILS AND INFORMATION, SEE THE BRIDGE GENERAL PLAN AND THE APPLICABLE GUARD RAIL STANDARD PLANS.

10. YEAR PLATE: THE DATE OF CONSTRUCTION IS REQUIRED ON THE OUTSIDE SHOULDER BRIDGE BARRIER TRANSITION FOR ONCOMING LANES OF TRAFFIC, SEE THE YEAR PLATE SPECIAL DETAIL FOR ADDITIONAL INFORMATION. FOR TAPERED DOWN BARRIER TRANSITIONS, THE YEAR PLATE SHALL BE PLACED ON THE OUTSIDE SHOULDER BRIDGE BARRIER.

FOR INFORMATIONAL USE

IP_PWP:d1226615\BD.7.1.1.01 - Bridge Barrier Common

SHEET NUMBER

PARISH	CONTROL SECTION	STATE PROJECT

DESIGN	C. GAUDRY	DETAIL	C. GAUDRY	REVIEW K. BRAUNER
CHECK	S. MAZUR	CHECK	S. MAZUR	SERIES # 1 OF 1

APPROVED BY CHIEF ENGINEER: DATE: 11/26/2025

NO.	DATE	REVISION OR CHANGE ORDER DESCRIPTION	BY

STATE OF LOUISIANA

GENERAL NOTES & INDEX

BRIDGE BARRIER COMMON DETAILS

BR-COMMON

DOTD LOUISIANA DEPARTMENT OF TRANSPORTATION & DEVELOPMENT

STANDARD PLAN

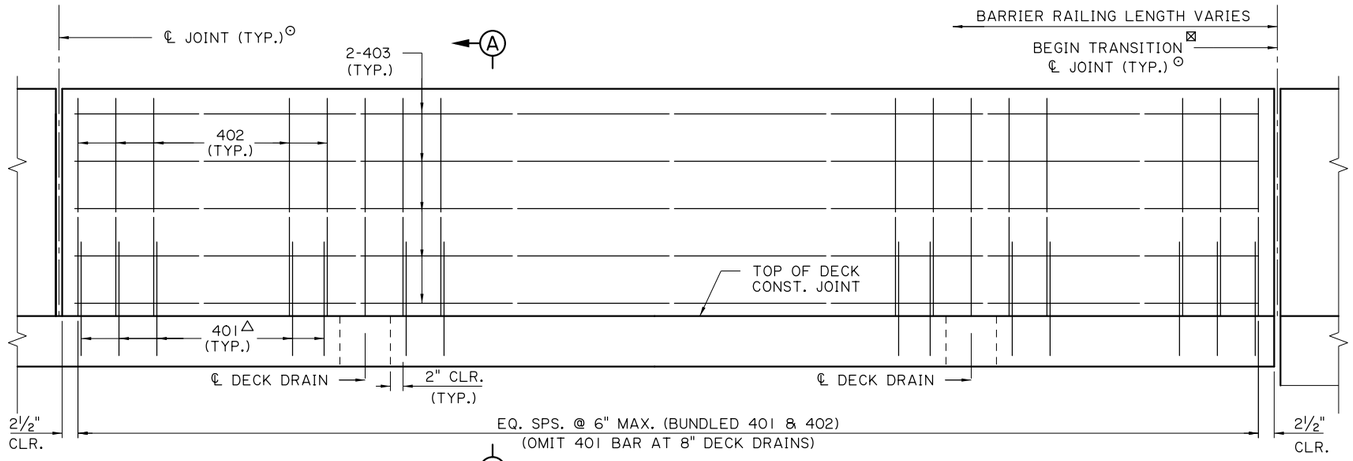

ELEVATION

STANDARD BRIDGE BARRIER RAILING
(WITH 8"ø DECK DRAIN SHOWN)

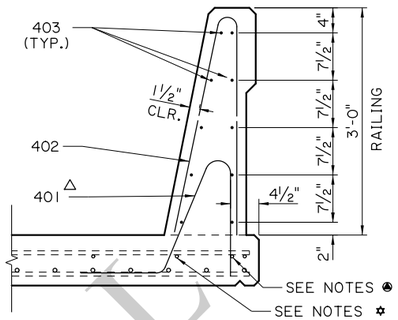

SECTION A-A

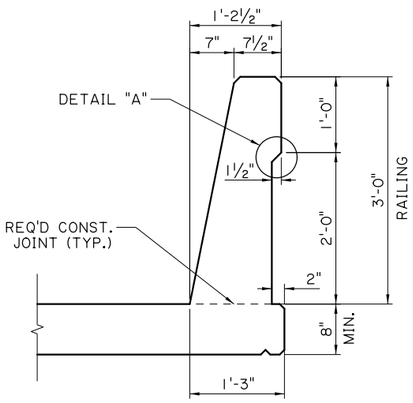

TYPICAL SECTION

SHOWING BARRIER DIMENSIONS
(SURFACE AREA = 6.72 SQFT/FT)

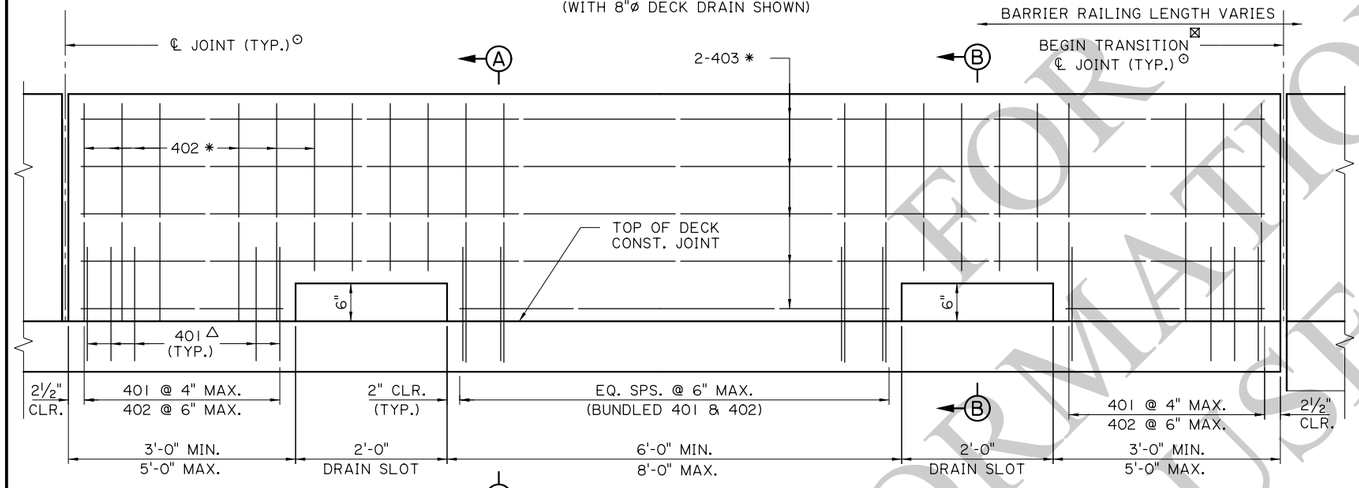

ELEVATION

SLOTTED BRIDGE BARRIER RAILING
WITH HORIZONTAL DRAIN SLOTS

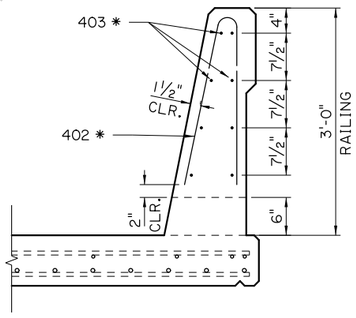

SECTION B-B

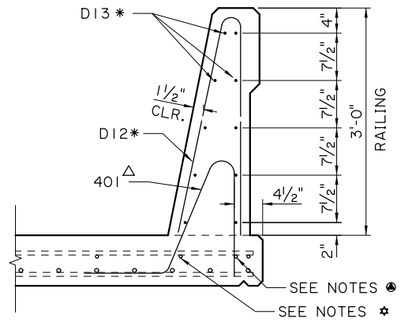

OPTIONAL WELDED WIRE REINFORCMENT (WWR)

NOTES:

1. SEE "BRIDGE BARRIER COMMON - GENERAL NOTES & INDEX" SHEET FOR GENERAL BRIDGE BARRIER NOTES.
2. THIS RAIL HAS BEEN SUCCESSFULLY EVALUATED BY FULL-SCALE CRASH TESTING TO MEET MASH TL-4 CRITERIA.
3. REINFORCING STEEL DIMENSIONS SHOWN ARE APPLICABLE FOR DECK THICKNESSES SHOWN IN TABLE. ADJUSTMENTS SHALL BE MADE FOR DECKS WITH OTHER THICKNESSES. SEE SPAN DETAILS FOR DECK THICKNESS.
4. DEFORMED WELDED WIRE REINFORCEMENT (WWR) SHALL BE GRADE 70 AND MEET SECTION 1009 WHEN SUBSTITUTED FOR BARS 402 AND 403, AS SHOWN.

△ 5. OMIT 401 BAR AT 8" DECK DRAINS AND AT BARRIER DRAIN SLOTS.

⊠ 6. REFER TO BRIDGE GENERAL PLAN FOR BARRIER RAILING TRANSITION TYPE. SEE TRANSITION DETAILS FOR MORE INFORMATION.

⊙ 7. 1" MINIMUM BARRIER JOINT. WHEN COINCIDENT TO SPAN EXPANSION JOINTS, JOINT SHALL BE EQUAL TO SPAN JOINT WIDTH.

✱ 8. CUT WHERE REQUIRED TO CLEAR DRAIN SLOTS, MAINTAIN 6" MAX. SPACING OF 402 BAR OVER DRAIN SLOTS.

✪ 9. AT THE CONTRACTOR'S OPTION, AN ADDITIONAL BAR CAN BE PLACED IN THE DECK TO AID REBAR PLACEMENT.

✲ 10. TOP LONGITUDINAL SLAB BAR MAY BE ADJUSTED LATERALLY ±3" TO TIE REINFORCING.

401 BAR DIMENSIONS		
DIMENSION	A	B
8" DECK	1'-4¼"	1'-5¼"
8½" DECK	1'-4¾"	1'-5⅞"
9" DECK	1'-5¼"	1'-6⅜"
9½" DECK	1'-5¾"	1'-7"
13" SLAB SPAN	1'-8¾"	1'-10¼"
14½" SLAB SPAN	1'-9⅝"	1'-11¼"

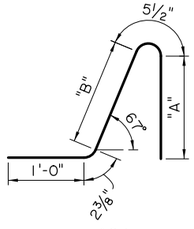

401
(3" ø PIN)

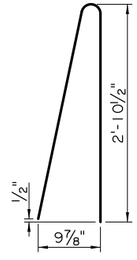

402
(2" ø PIN)

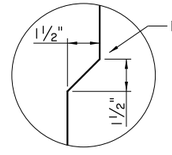

DETAIL "A"

FOR INFORMATIONAL USE

SHEET NUMBER

PARISH | CONTROL SECTION | STATE PROJECT

DESIGN S. MAZUR | DETAIL S. MAZUR | REVIEW K. BRAUNER
CHECK C. GAUDRY | CHECK C. GAUDRY | SERIES # 1 OF 1

APPROVED BY CHIEF ENGINEER: DATE: 11/26/2025

NO.	DATE	REVISION OR CHANGE ORDER DESCRIPTION	BY

STATE OF LOUISIANA — DEPARTMENT OF TRANSPORTATION AND DEVELOPMENT

DOTD — LOUISIANA DEPARTMENT OF TRANSPORTATION & DEVELOPMENT

STANDARD PLAN

BRIDGE BARRIER DETAILS

36" SINGLE SLOPE

BR-36SS

10:2
11/25/2025
IP_PWP:d1226615\BD.7.1.3.01 - 36in Single Slope Bridge Barrier

IP_PWP:d1226615\BD.7.1.3.02 - 36in Single Slope Barrier Transition (Wingwall)
11/25/2025 10:2

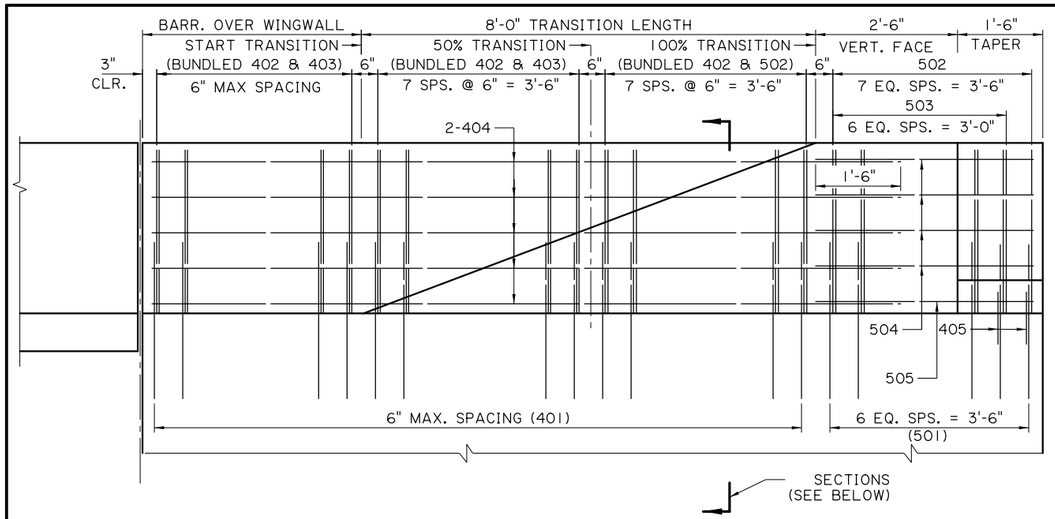

BARRIER RAILING TRANSITION ELEVATION

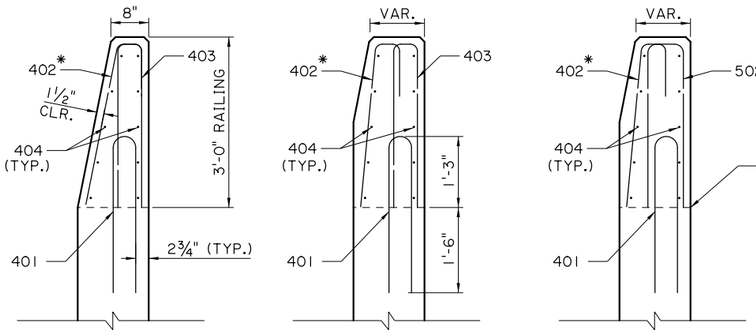

BARRIER OVER WINGWALL AND START OF TRANSITION

BEFORE 50% TRANSITION

AFTER 50% TRANSITION

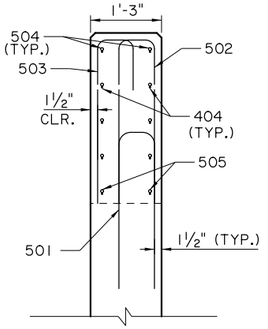

VERTICAL FACE

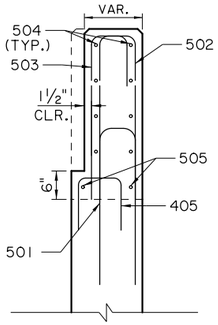

TAPER

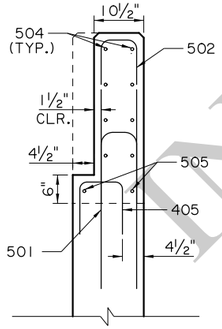

END OF BARRIER

NOTES:

1. SEE "BRIDGE BARRIER COMMON - GENERAL NOTES & INDEX" SHEET FOR GENERAL BRIDGE BARRIER NOTES.
2. CURB SHALL BE POURED MONOLITHIC WITH BARRIER.
3. * ADJUST ANGLE OF LEG AS NEEDED TO MAINTAIN MIN. COVER AT FACE OF BARRIER.

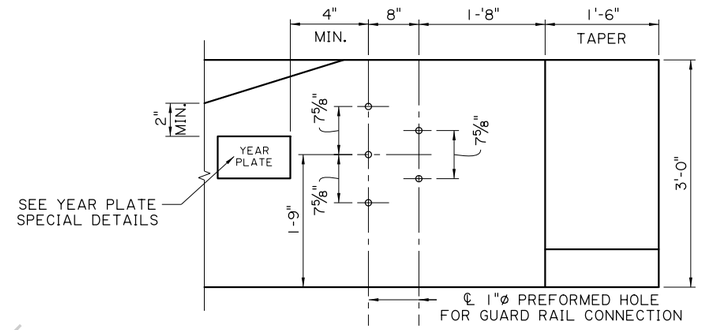

GUARD RAIL CONNECTION DETAIL

SEE HIGHWAY GUARD RAIL (MASH) STANDARD PLANS FOR MORE INFORMATION

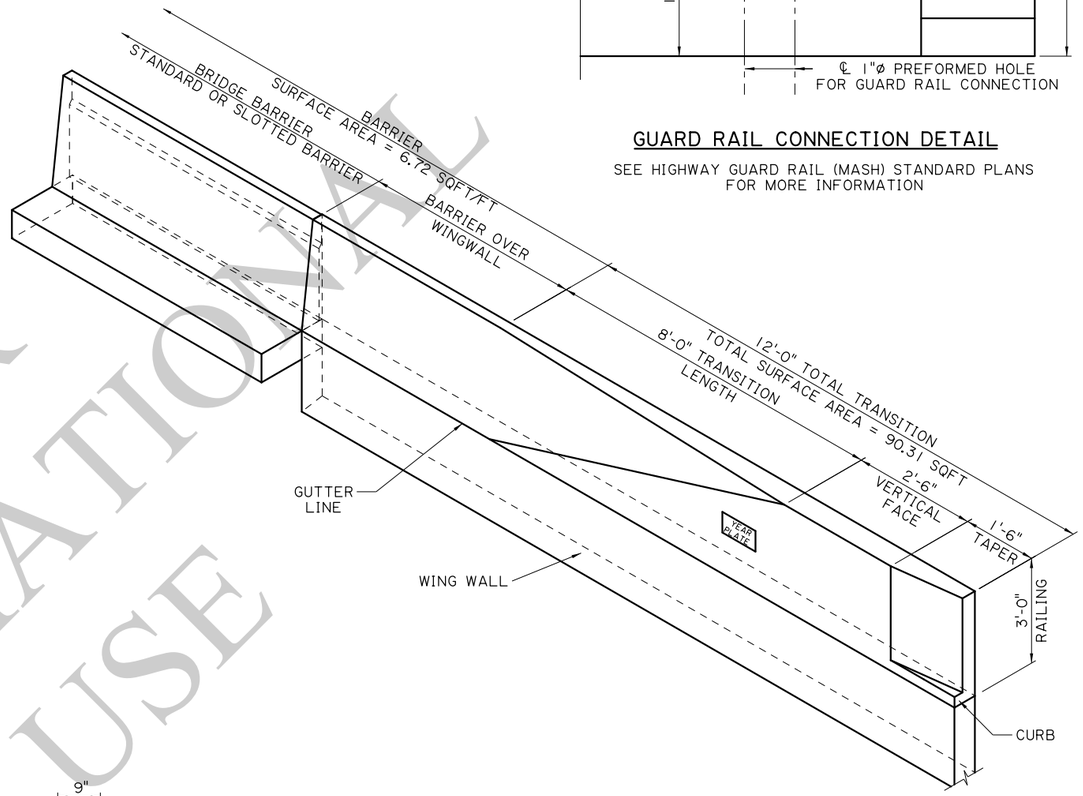

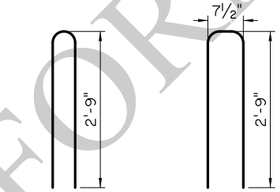

BAR 401 (3¾" ø PIN)

BAR 501 (3¾" ø PIN)

BAR 405 (2" ø PIN)

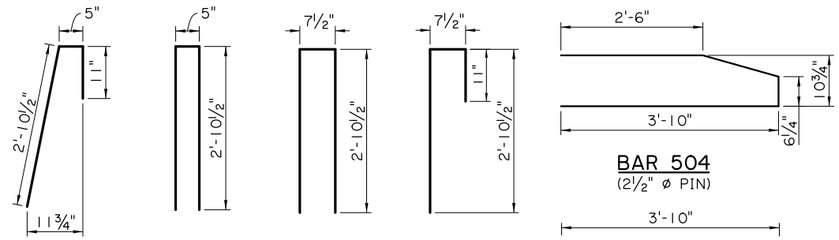

BAR 402 (2" ø PIN)

BAR 403 (2" ø PIN)

BAR 502 (2½" ø PIN)

BAR 503 (2½" ø PIN)

BAR 504 (2½" ø PIN)

BAR 505 (2½" ø PIN)

FOR INFORMATIONAL USE

SHEET NUMBER	PARISH	CONTROL SECTION	STATE PROJECT

DESIGN	S. MAZUR	DETAIL	S. MAZUR	REVIEW	K. BRAUNER
CHECK	C. GAUDRY	CHECK	C. GAUDRY	SERIES #	1 OF 1

APPROVED BY CHIEF ENGINEER: DATE: 11/26/2025

NO.	DATE	REVISION OR CHANGE ORDER DESCRIPTION	BY

STATE OF LOUISIANA

TRANSITION ON WING WALL

36" SINGLE SLOPE BRIDGE BARRIER

BR-36SS-TR1

DOTD LOUISIANA DEPARTMENT OF TRANSPORTATION & DEVELOPMENT

STANDARD PLAN

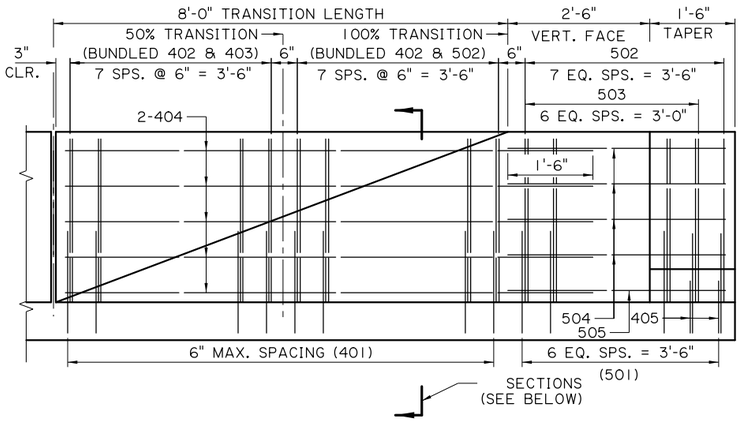

BARRIER RAILING TRANSITION ELEVATION

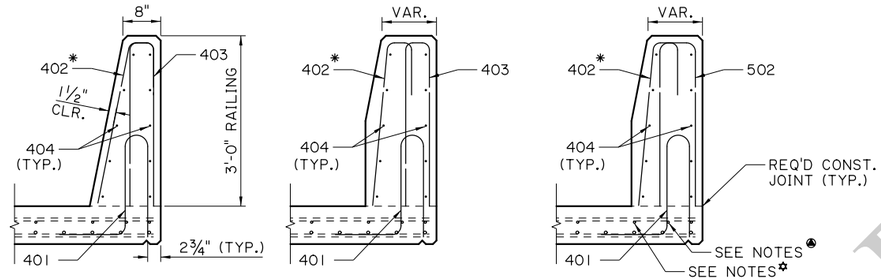

BEGINNING OF TRANSITION | BEFORE 50% TRANSITION | AFTER 50% TRANSITION

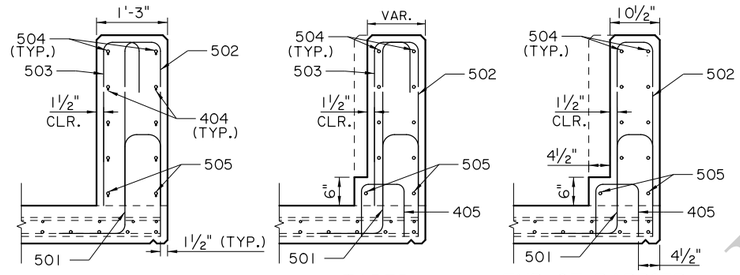

VERTICAL FACE | TAPER | END OF BARRIER

NOTES:

1. SEE "BRIDGE BARRIER COMMON - GENERAL NOTES & INDEX" SHEET FOR GENERAL BRIDGE BARRIER NOTES.
2. REINFORCING STEEL DIMENSIONS SHOWN ARE APPLICABLE FOR DECK THICKNESSES SHOWN IN TABLE. ADJUSTMENTS SHALL BE MADE FOR DECKS AND SPANS WITH OTHER THICKNESSES. SEE SPAN DETAILS FOR DECK THICKNESS.
3. CURB SHALL BE POURED MONOLITHIC WITH BARRIER.
◉ 4. AT THE CONTRACTORS OPTION, AN ADDITIONAL BAR CAN BE PLACED IN THE DECK TO AID REBAR PLACEMENT.
✿ 5. TOP LONGITUDINAL SLAB BAR MAY BE ADJUSTED LATERALLY ±3" TO TIE REINFORCING.
* 6. ADJUST ANGLE OF LEG AS NEEDED TO MAINTAIN MIN. COVER AT FACE OF BARRIER.

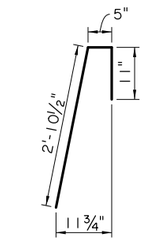

BAR 402 (2" ø PIN)

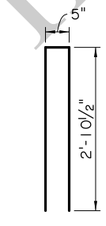

BAR 403 (2" ø PIN)

BAR 502 (2½" ø PIN)

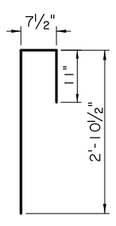

BAR 503 (2½" ø PIN)

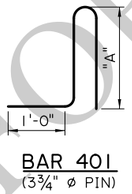

BAR 401 (3¾" ø PIN)

BAR 501 (3¾" ø PIN)

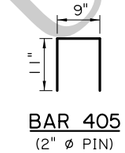

BAR 405 (2" ø PIN)

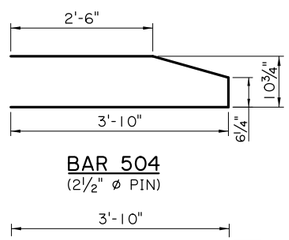

BAR 504 (2½" ø PIN)

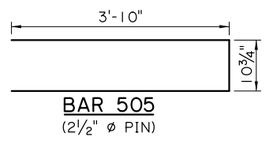

BAR 505 (2½" ø PIN)

401 & 501 BAR DIMENSIONS	
DIMENSION	"A"
8" DECK	1'-9½"
8½" DECK	1'-10"
9" DECK	1'-10½"
9½" DECK	1'-11"
13 " SLAB SPAN	2'-2"
14½" SLAB SPAN	2'-3"

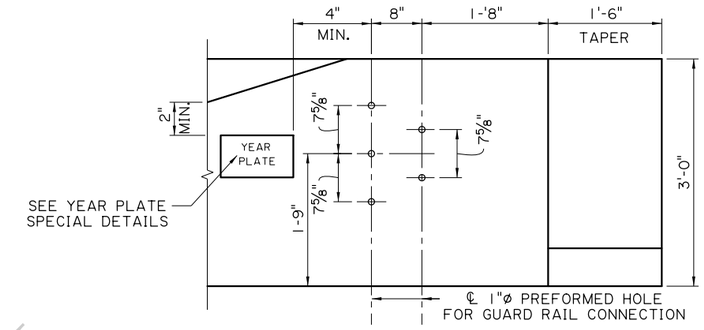

GUARD RAIL CONNECTION DETAIL

SEE HIGHWAY GUARD RAIL (MASH) STANDARD PLANS FOR MORE INFORMATION

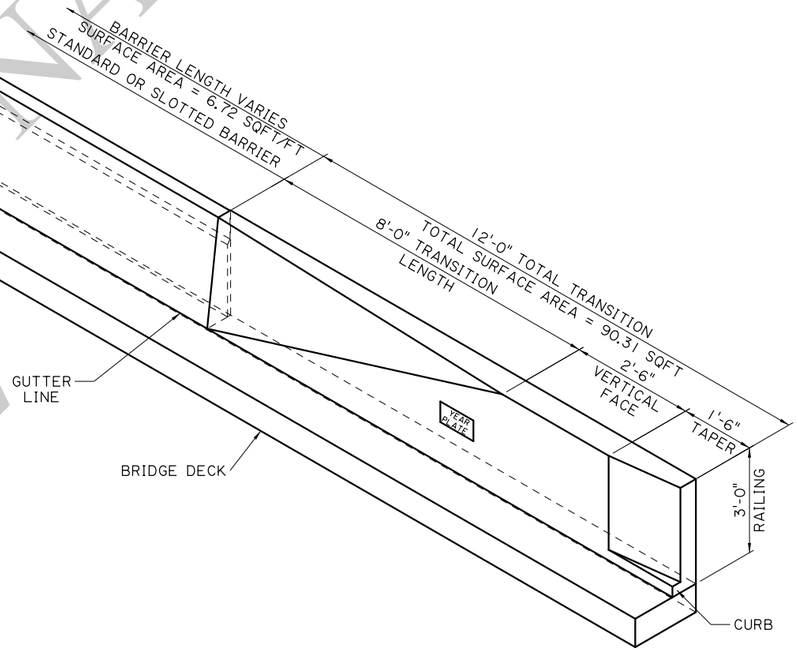

FOR INFORMATIONAL USE

SHEET NUMBER		
PARISH	CONTROL SECTION	STATE PROJECT
DESIGN S. MAZUR	DETAIL S. MAZUR	REVIEW K. BRAUNER
CHECK C. GAUDRY	CHECK C. GAUDRY	SERIES # 1 OF 1

APPROVED BY CHIEF ENGINEER: DATE: 11/26/2025

NO.	DATE	REVISION OR CHANGE ORDER DESCRIPTION	BY

STATE OF LOUISIANA DEPARTMENT OF TRANSPORTATION AND DEVELOPMENT

TRANSITION ON BRIDGE SPAN

36" SINGLE SLOPE BRIDGE BARRIER

BR-36SS-TR2

DOTD LOUISIANA DEPARTMENT OF TRANSPORTATION & DEVELOPMENT

STANDARD PLAN

IP_PWP:d1226615\BD.7.1.3.03 - 36in Single Slope Barrier Transition (Span)
11/25/2025 10:2

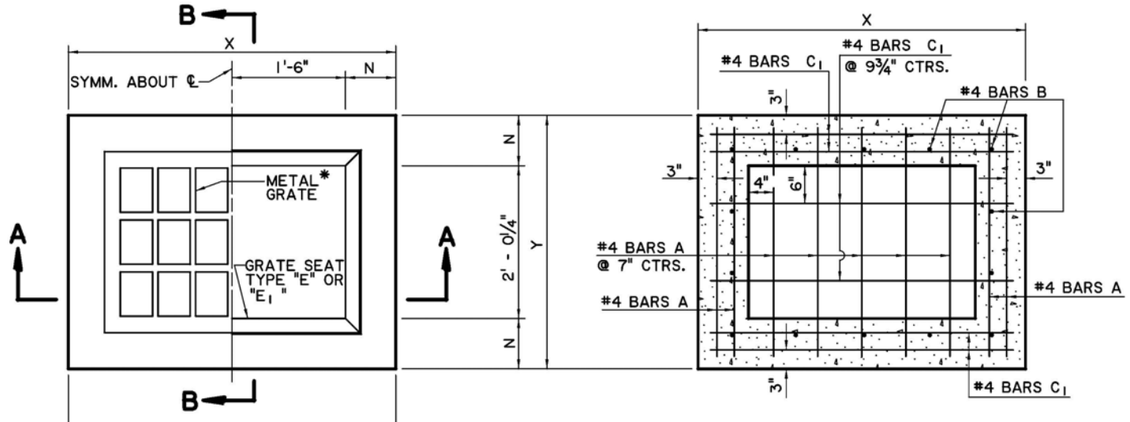

PLAN

* GRATE TO BE TYPE "B" OR "C"
TYPE "B" SHOWN.

HORIZONTAL SECTION

SHOWING BOTTOM SLAB REINFORCING STEEL

NOTE: TYPE "B" GRATE TO BE USED WHERE NO PEDESTRIAN TRAFFIC IS EXPECTED.

TYPE "C" GRATE TO BE USED WHERE PEDESTRIAN TRAFFIC IS EXPECTED.

DIMENSIONS			
DEPTH OF BASIN	N	X	Y
FT.	IN.	FT.- IN.	FT.- IN.
0 - 8	7	4-2	3-2¼
8.1 - 12	8	4-4	3-4¼

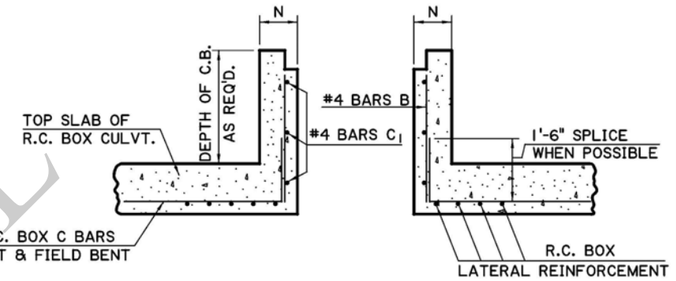

LONGITUDINAL SECTION

SHOWING CATCH BASIN
USED WITH R.C. BOX CULVERT.

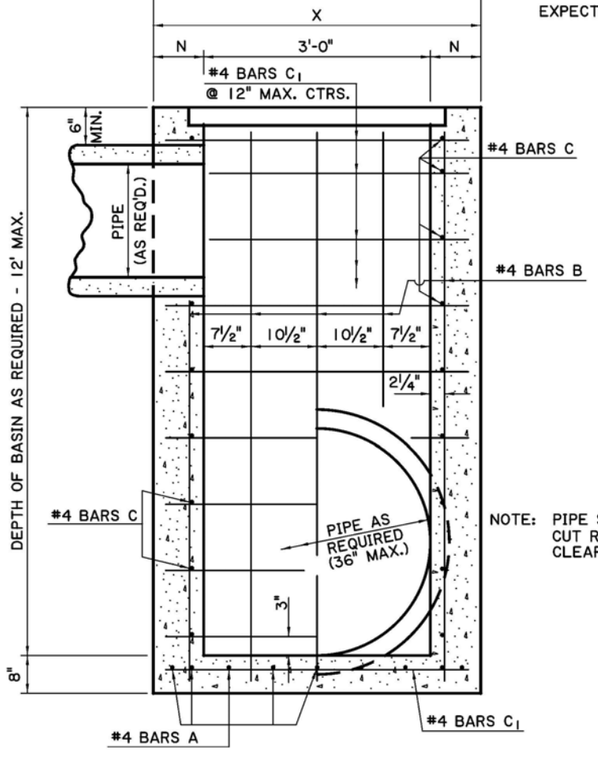

SECTION A-A

NOTE: PIPE SIZE & LOCATION VARIES. CUT REINFORCING STEEL TO CLEAR, AS REQUIRED.

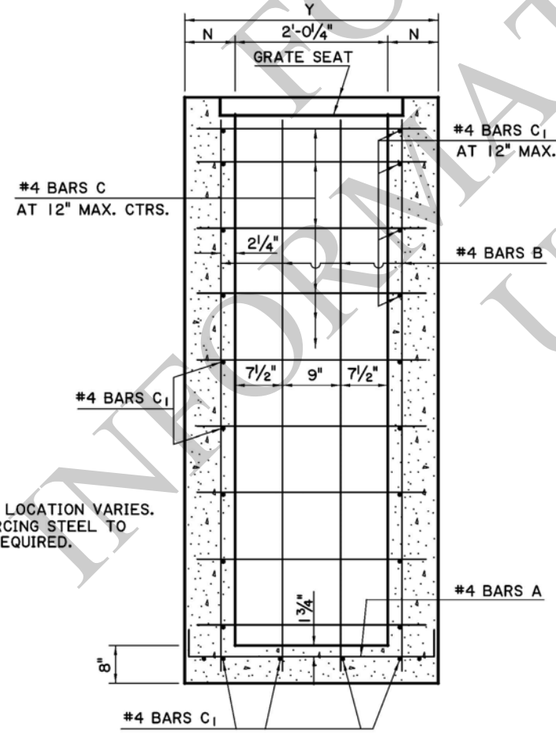

SECTION B-B

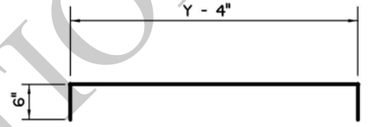

#4 BARS A

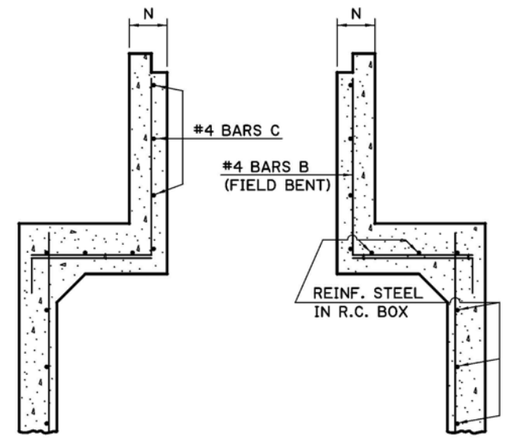

TRANSVERSE SECTION

SHOWING CATCH BASIN
USED WITH R.C. BOX CULVERT.

GENERAL NOTES:

SECTION 702 OF THE CURRENT DOTD STANDARD SPECIFICATIONS SHALL APPLY.

DIMENSIONS RELATING TO REINFORCING STEEL ARE TO BAR CENTERS.

VERTICAL REINFORCING STEEL MAY BE SPLICED. SPLICE LENGTH IS 35 DIAMETERS.

FOR DETAILS OF GRATE AND SEAT, SEE STD. PLAN MC-01 (TYPE B or C).

SEE PLANS FOR TYPE OF GRATE TO BE USED FOR EACH CATCH BASIN.

FOR INFORMATIONAL USE

SHEET NUMBER

PARISH | CONTROL SECTION | STATE PROJECT

DESIGN PAA | DETAIL KAJ | REVIEW WMR | SERIES # 1 OF 1

CHECK | CHECK

APPROVED BY CHIEF ENGINEER: DATE: 6/1/2026

NO. | DATE | REVISION OR CHANGE ORDER DESCRIPTION | BY

CONCRETE OPEN TOP CATCH BASIN
Max. Pipe: 36" x 24"
Max. Depth: 12'
To be used with Std. Plan MC-01

CB-01

DOTD LOUISIANA DEPARTMENT OF TRANSPORTATION & DEVELOPMENT

STANDARD PLAN

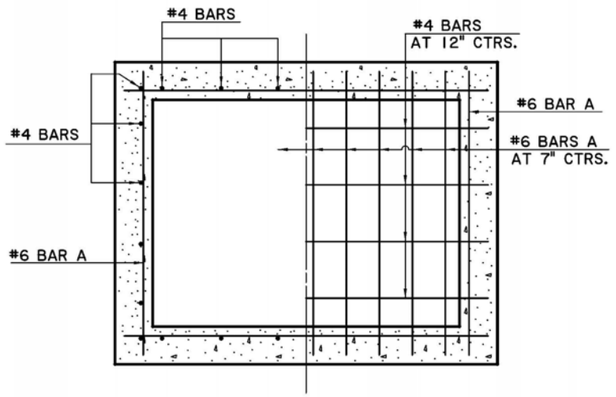

SECTIONAL PLAN

(SHOWING BOTTOM SLAB & WALLS)

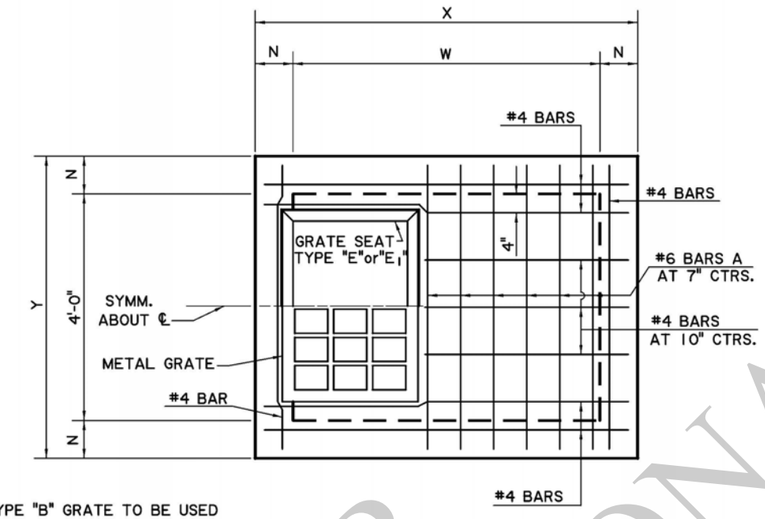

NOTE: TYPE "B" GRATE TO BE USED WHERE NO PEDESTRIAN TRAFFIC IS EXPECTED.

TYPE "C" GRATE TO BE USED WHERE PEDESTRIAN TRAFFIC IS EXPECTED.

PLAN

GRATE TO BE TYPE "B" or "C".
TYPE "B" SHOWN.

DIMENSIONS

TRUNK PIPE	DEPTH TO 8'					DEPTH 8' TO 12'				
	N	T	W	X	Y	N	T	W	X	Y
INCH	INCH	INCH	FT-IN	FT-IN	FT-IN	INCH	INCH	FT-IN	FT-IN	FT-IN
42	7	9	4-3	5-5	5-2	8	9	4-3	5-7	5-4
48	7	9	4-10	6-0	5-2	8	9	4-10	6-2	5-4
54	7	9	5-5	6-7	5-2	8	9	5-5	6-9	5-4
60	7	10	6-0	7-2	5-2	8	10	6-0	7-4	5-4
66	7	10	6-7	7-9	5-2	8	10	6-7	7-11	5-4
72	7	10	7-2	8-4	5-2	8	10	7-2	8-6	5-4

NOTE: X AND W DIMENSIONS MAY BE VARIED FOR SKEWED PIPE, BUT W SHALL NOT EXCEED 7'-2".

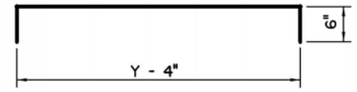

#6 BARS A

(4½" Diam. Pin)

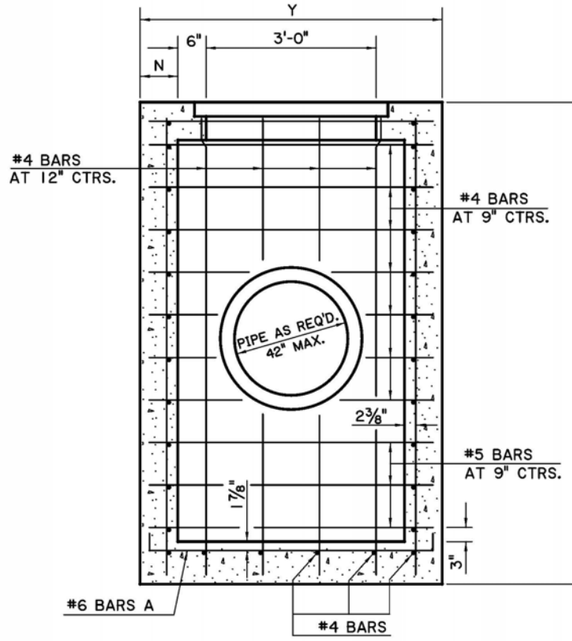

SECTION A-A

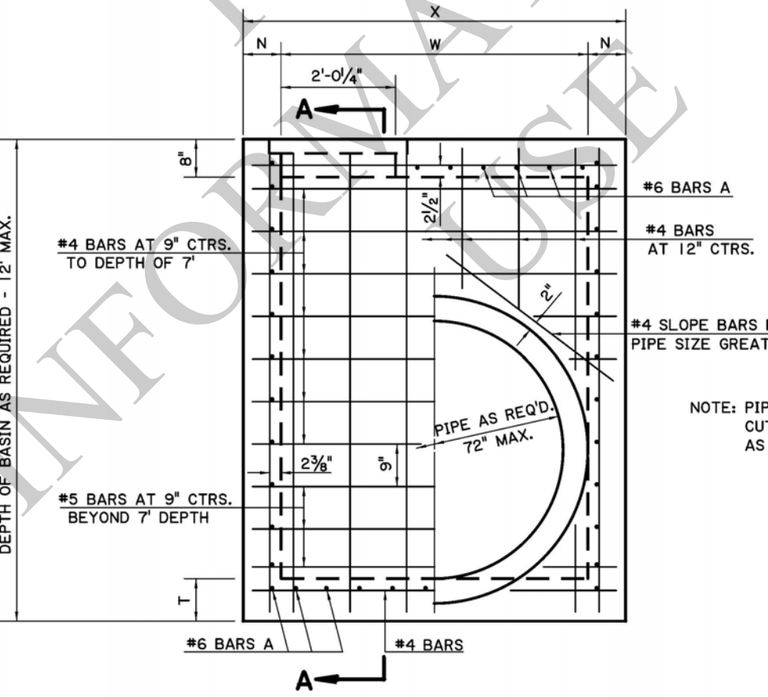

ELEVATION

NOTE: PIPE SIZE & LOCATION VARIES. CUT REINFORCING STEEL TO CLEAR, AS REQUIRED.

GENERAL NOTES:

SECTION 702 OF THE CURRENT DOTD STANDARD SPECIFICATIONS SHALL APPLY.

DIMENSIONS RELATING TO REINFORCING STEEL ARE TO BAR CENTERS.

VERTICAL REINFORCING STEEL MAY BE SPLICED. SPLICE LENGTH IS 35 DIAMETERS.

FOR DETAILS OF GRATE AND SEAT, SEE STD. PLAN MC-01 (TYPE B or C).

SEE PLANS FOR TYPE OF GRATE TO BE USED FOR EACH CATCH BASIN.

FOR INFORMATIONAL USE

SHEET NUMBER

PARISH | CONTROL SECTION | STATE PROJECT

DESIGN PAA | DETAIL KAJ | REVIEW WMR | SERIES # 1 OF 1

CHECK | CHECK

APPROVED BY CHIEF ENGINEER:

DATE: 6/1/2026

NO. | DATE | REVISION OR CHANGE ORDER DESCRIPTION | BY

CONCRETE OPEN TOP CATCH BASIN
Max. Pipe: 72" x 42"
Max. Depth: 12'
To be used with Std. Plan MC-01

CB-02

DOTD
LOUISIANA DEPARTMENT OF TRANSPORTATION & DEVELOPMENT

STANDARD PLAN

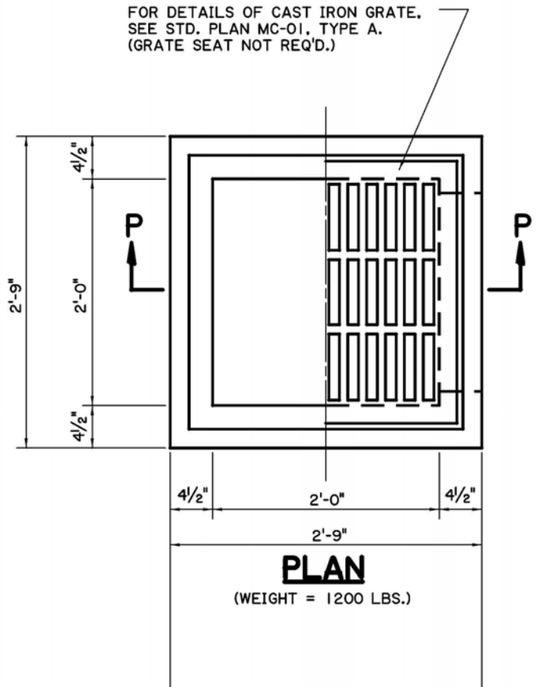

PLAN

(WEIGHT = 1200 LBS.)

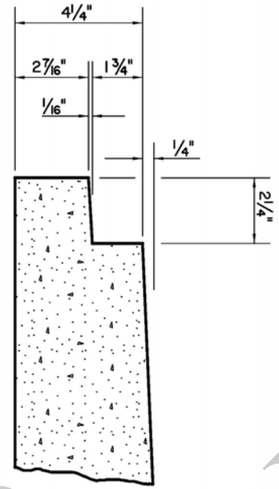

DETAIL A

ALL DIMENSIONS TYPICAL

GENERAL NOTES:

ALL CONCRETE TO BE CLASS "P".

SETTING TOLERANCE TO BE +0 & -1".

WELDED WIRE MESH TO BE OVERLAPPED A MINIMUM 3" FOR SPLICE.

OPENING TO MATCH TYPE OF PIPE SPECIFIED ON PLAN/PROFILE OR SUMMARY OF DRAINAGE STRUCTURES.

THE MANUFACTURER SHALL BE RESPONSIBLE FOR THE PLACEMENT OF ALL PICK-UP AND HANDLING DEVICES.

AFTER PLACEMENT OF PIPE, THE OPENING AROUND PIPE SHALL BE FILLED WITH FLEXIBLE PLASTIC JOINT MATERIAL.

DIMENSIONS RELATING TO REINFORCED STEEL ARE TO BAR CENTERS.

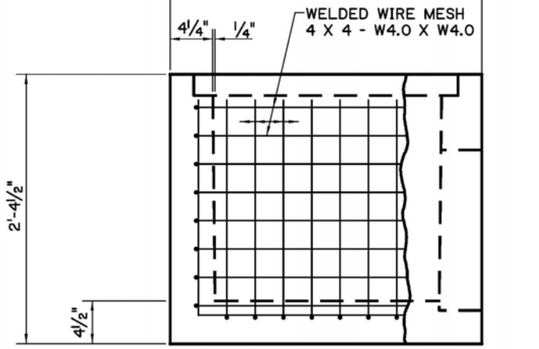

ELEVATION

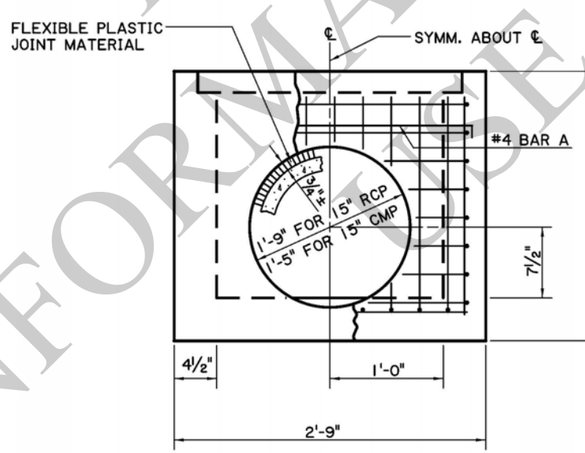

END ELEVATION

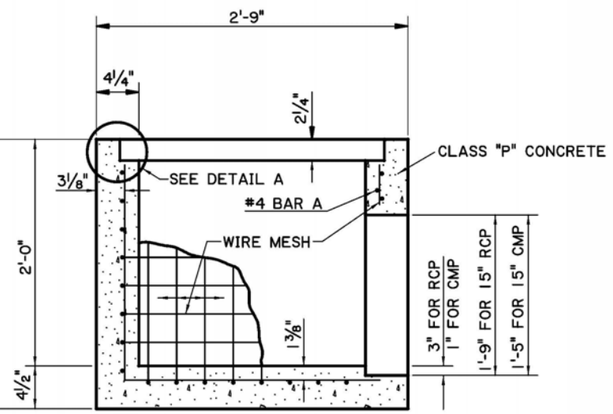

SECTION P-P

NOTE: 4½" UNIFORM WALLS MAY BE USED AT SUPPLIER'S OPTION.

NOT TO BE USED WHERE SUBJECT TO VEHICULAR TRAFFIC.

NOTE: STANDARD PLAN MC-01 (DETAILS OF GRATES, FRAMES, SEATS, LIDS, ETC.) MAY BE OBTAINED FROM:

HYDRAULICS SECTION
DEPARTMENT OF TRANSPORTATION
AND DEVELOPMENT
P.O. BOX 94245
CAPITOL STATION
BATON ROUGE, LA 70804

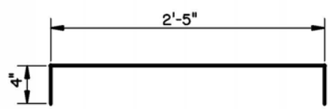

#4 BAR A

FOR INFORMATIONAL USE

SHEET NUMBER

PARISH | CONTROL SECTION | STATE PROJECT

DESIGN CDJ | DETAIL KAJ | REVIEW WMR | SERIES # 1 OF 1

CHECK | CHECK

APPROVED BY CHIEF ENGINEER:

DATE: 6/1/2026

NO. | DATE | REVISION OR CHANGE ORDER DESCRIPTION | BY

STATE OF LOUISIANA

PRECAST OPEN TOP CATCH BASIN
Max. Pipe: 15"
Depth: Minimum
To be used with Std. Plan MC-01

CB-04

DOTD
LOUISIANA DEPARTMENT OF TRANSPORTATION & DEVELOPMENT

STANDARD PLAN

FOR DETAILS OF CAST IRON GRATE, SEE STD. PLAN MC-01, TYPE D.

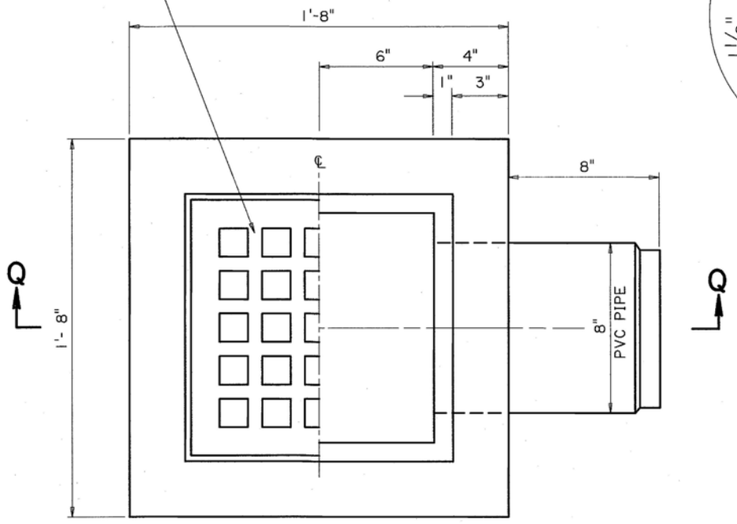

PLAN

WEIGHT APPROX. 460 LBS PLUS GRATE
RIGHT HALF OF GRATE NOT SHOWN FOR CLARITY

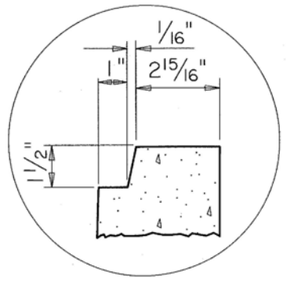

INSET A

(TYPICAL)

NOTE:

STANDARD PLAN MC-01 (DETAILS OF GRATES, FRAMES, SEATS LIDS, ETC.), MAY BE OBTAINED FROM:

HYDRAULICS & STANDARD PLANS
DEPARTMENT OF TRANSPORTION
AND DEVELOPMENT
P.O. BOX 94245
CAPITOL STATION
BATON ROUGE, LA 70804

PRECAST OPTION

NOTES:

CONCRETE TO BE CLASS A1.

CATCH BASIN TO BE SUPPLIED COMPLETE, INCLUDING C.I. GRATE.

THE CATCH BASIN SUPPLIER SHALL BE RESPONSIBLE FOR SELECTION AND PLACEMENT OF ANY PICK-UP AND HANDLING DEVICES. SETTING TOLERANCE TO BE +0 & -1".

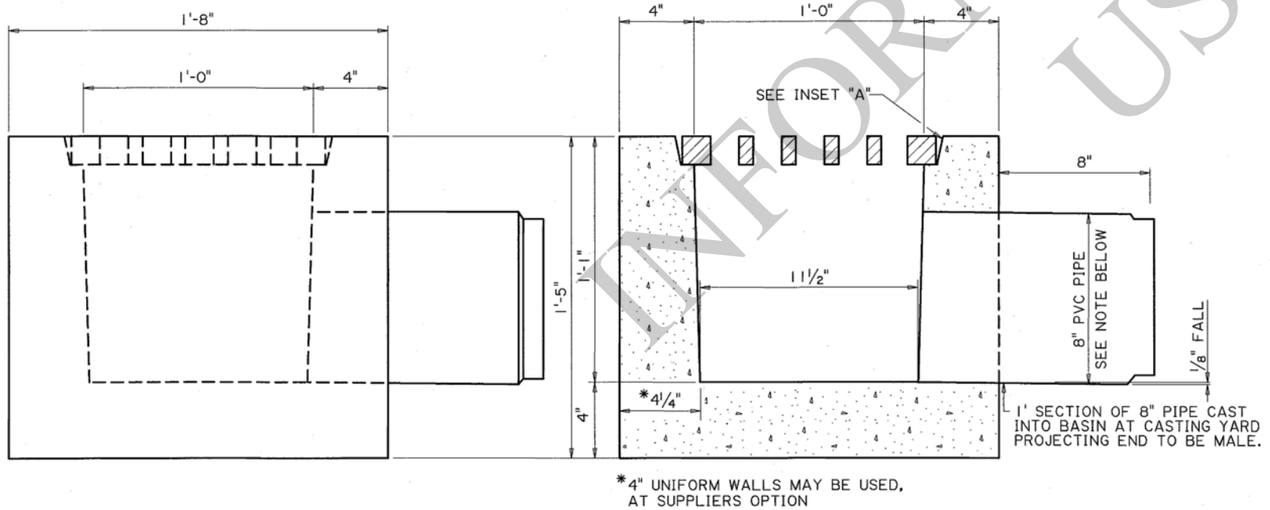

ELEVATION

*4" UNIFORM WALLS MAY BE USED, AT SUPPLIERS OPTION

SECTION Q-Q

NOT TO BE USED WHERE SUBJECT TO VEHICULAR TRAFFIC

AN 8" RESILIENT BOOT CONNECTOR (SUCH AS A-LOK, Z-LOK OR QUIK-LOK) IS ALLOWED AS AN ALTERNATE TO CAST-IN-PLACE PIPE DETAIL

CAST-IN-PLACE OPTION

CLASS "M" CONCRETE

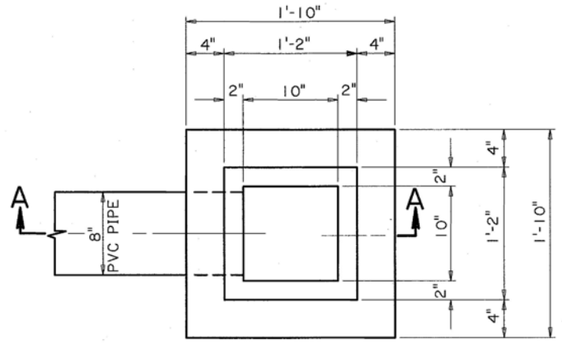

PLAN

GRATE NOT SHOWN

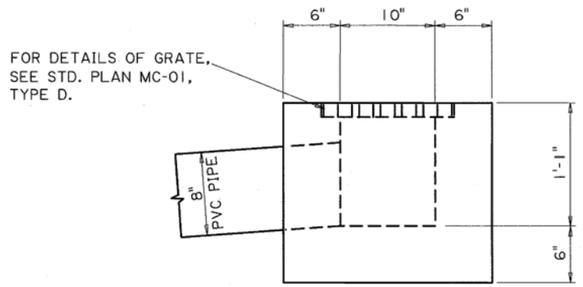

ELEVATION

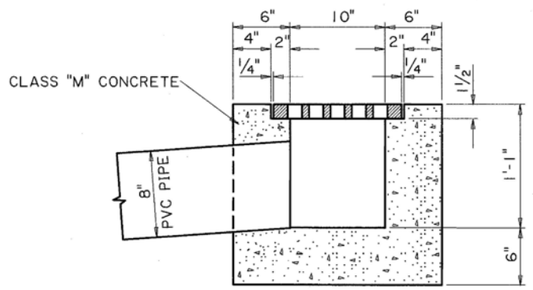

SECTION A-A

NOT TO BE USED WHERE SUBJECT TO VEHICULAR TRAFFIC

FOR INFORMATIONAL USE

SHEET NUMBER

PARISH | CONTROL SECTION | STATE PROJECT

DESIGN CDJ | CHECK JCM | DETAIL TL | CHECK MH | REVIEW | SERIES # 1 OF 1

APPROVED BY CHIEF ENGINEER: DATE: 6/1/2026

NO. | DATE | REVISION OR CHANGE ORDER DESCRIPTION | BY

STATE OF LOUISIANA DEPARTMENT OF TRANSPORTATION AND DEVELOPMENT

CONCRETE CATCH BASIN

YARD DRAIN TYPE - PRECAST OR CAST-IN-PLACE MAX. PIPE 8"
To be used with Std. Plan MC-01

CB-05

DOTD LOUISIANA DEPARTMENT OF TRANSPORTATION & DEVELOPMENT

STANDARD PLAN

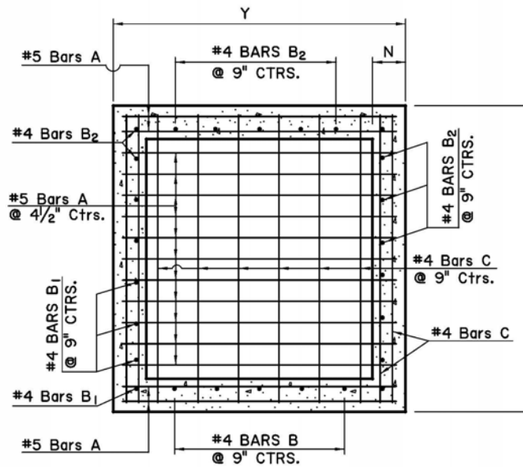

SECTION

SHOWING BOTTOM SLAB REINFORCING STEEL

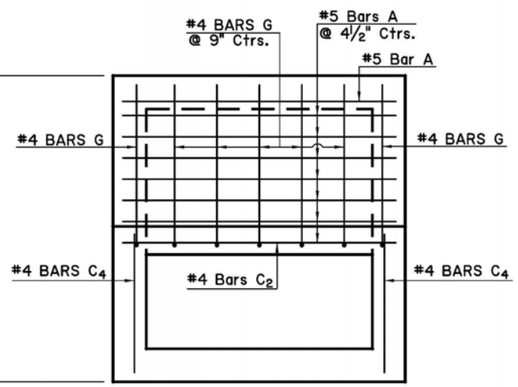

PLAN

SHOWING TOP SLAB REINFORCING STEEL

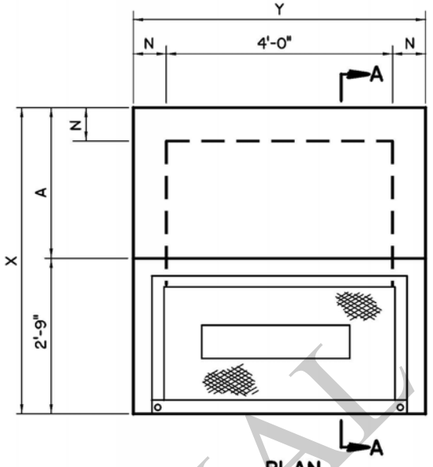

PLAN

FOR DETAILS OF METAL GRATE AND COVER, SEE STD. PLAN MC-01, TYPE "H".

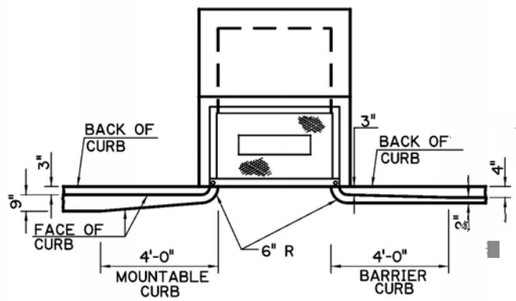

TRANSITION IN CURB WIDTH

(TYPICAL)

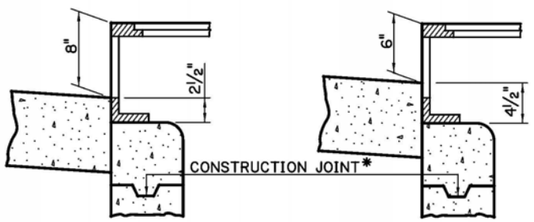

INLET CONFIGURATION

WHEN USED WITH 6" BARRIER CURB

WHEN USED WITH 4" MOUNTABLE CURB

*NOTE:
THE BASIN SHALL NOT BE CONSTRUCTED ABOVE BOTTOM OF PAVEMENT ELEVATION UNTIL THE PAVING ADJACENT TO THE BASIN IS IN PLACE.

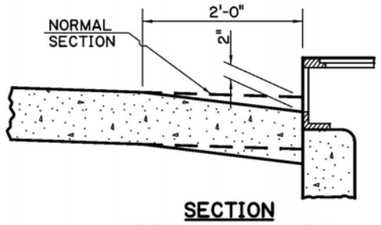

SECTION

SHOWING PAVEMENT SUMP TYPICAL

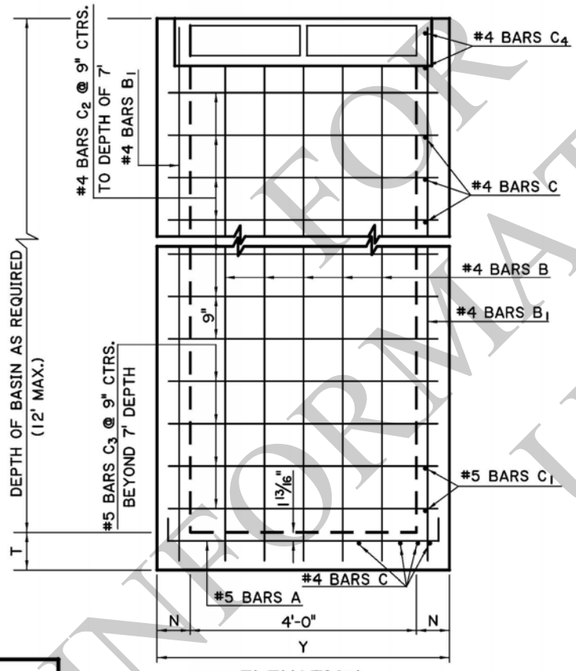

ELEVATION

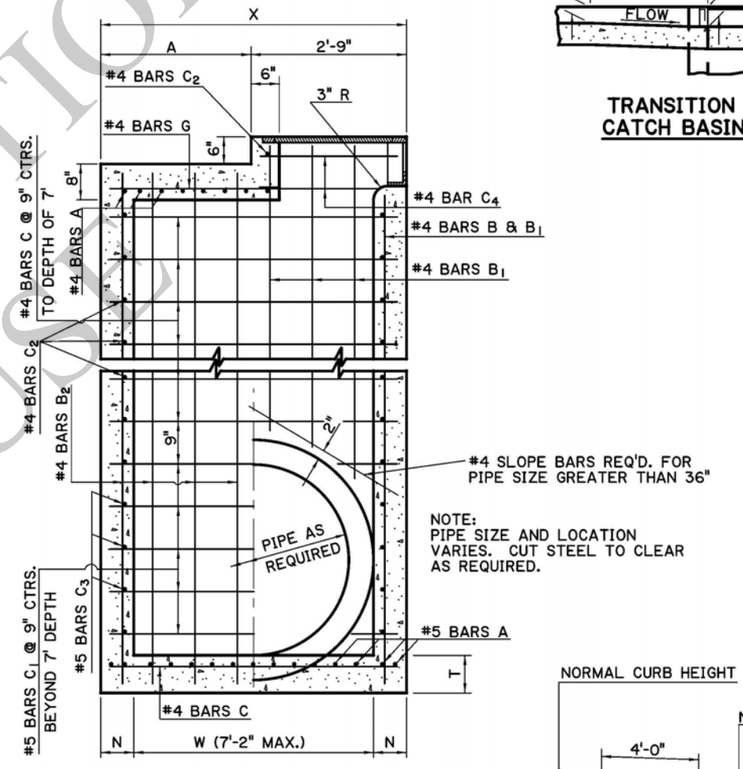

SECTION A-A

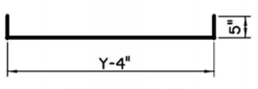

#5 BARS A

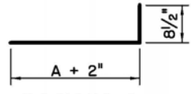

#4 BARS G

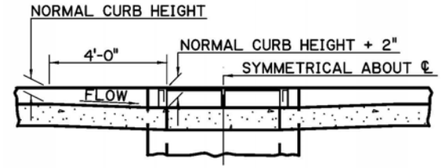

TRANSITION IN CURB HEIGHT CATCH BASIN AT LOW POINT

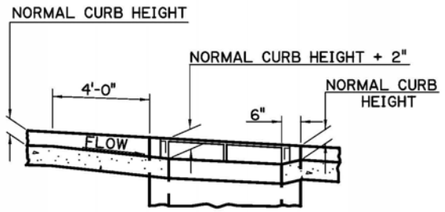

TRANSITION IN CURB HEIGHT CATCH BASIN ON A GRADE

CONCRETE CATCH BASIN

PIPE DIA. ①	W ②	T	DEPTH LESS THAN 8'				DEPTH FROM 8' TO 12'			
			X	Y	N	A	X	Y	N	A
In	Ft-In	In	Ft-In	Ft-In	In	Ft-In	Ft-In	Ft-In	In	Ft-In
15 to 24	2-6	8	3-8	5-2	7	0-11	3-10	5-4	8	1-1
30	3-1	8	4-3	5-2	7	1-6	4-5	5-4	8	1-8
36	3-8	8	4-10	5-2	7	2-1	5-0	5-4	8	2-3
42	4-3	8	5-5	5-2	7	2-8	5-7	5-4	8	2-10
48	4-10	8	6-0	5-2	7	3-3	6-2	5-4	8	3-5
54	5-5	9	6-7	5-2	7	3-10	6-9	5-4	8	4-0
60	6-0	9	7-2	5-2	7	4-5	7-4	5-4	8	4-7
72	7-2	9	8-4	5-2	7	5-7	8-6	5-4	8	5-9

① REFERS TO SIDEWALL PIPE OR "TRUNKLINE". FRONTWALL OR "CROSSING PIPE" MAY NOT EXCEED 42".

② W AND X DIMENSIONS MAY BE VARIED FOR SKEWED PIPE, BUT W SHALL NOT EXCEED 7'-2".

FOR INFORMATIONAL USE

SHEET NUMBER

PARISH | CONTROL SECTION | STATE PROJECT

DESIGN CDJ | CHECK HJB | DETAIL KAJ | CHECK WMR | REVIEW | SERIES # 1 OF 1

APPROVED BY CHIEF ENGINEER:

DATE: 6/1/2026

NO.	DATE	REVISION OR CHANGE ORDER DESCRIPTION	BY

STATE OF LOUISIANA DEPARTMENT OF TRANSPORTATION AND DEVELOPMENT

CONCRETE CATCH BASIN
CURB OPENING
4" MOUNTABLE OR 6" BARRIER CURB
MAX. PIPE: 42" X 72" MAX. DEPTH: 12'

CB-06

DOTD
LOUISIANA DEPARTMENT OF TRANSPORTATION & DEVELOPMENT

STANDARD PLAN

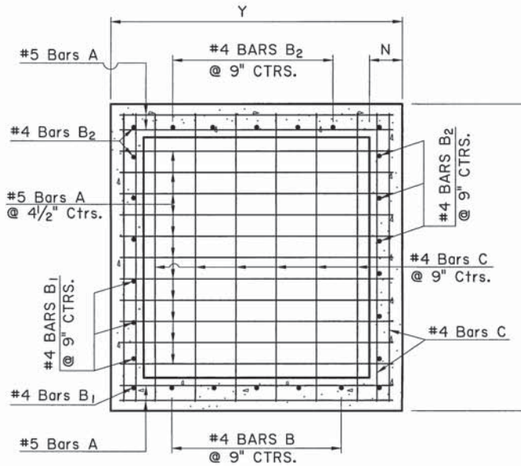

SECTION

SHOWING BOTTOM SLAB REINFORCING STEEL

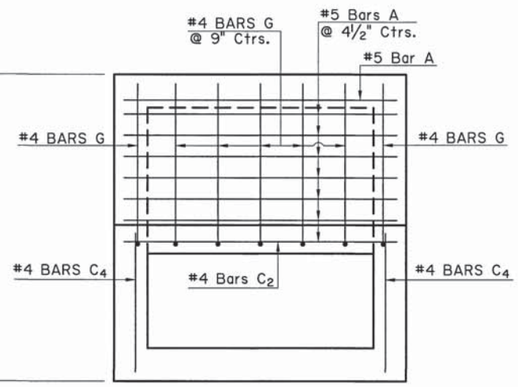

PLAN

SHOWING TOP SLAB REINFORCING STEEL

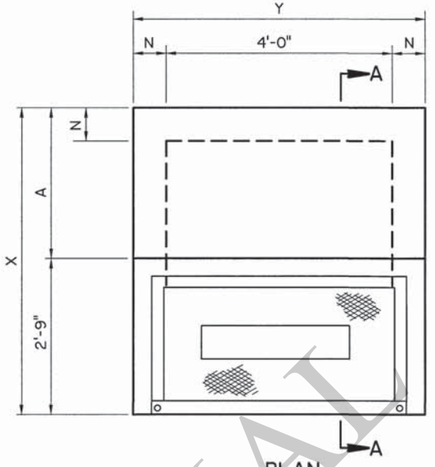

PLAN

FOR DETAILS OF METAL GRATE AND COVER, SEE STD. PLAN MC-01, TYPE "H".

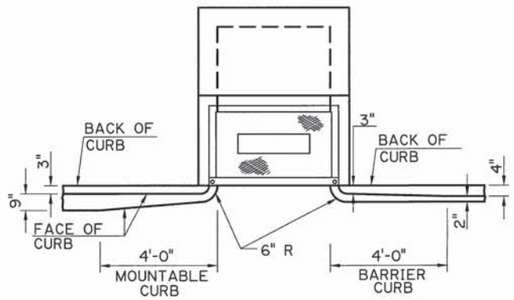

TRANSITION IN CURB WIDTH

(TYPICAL)

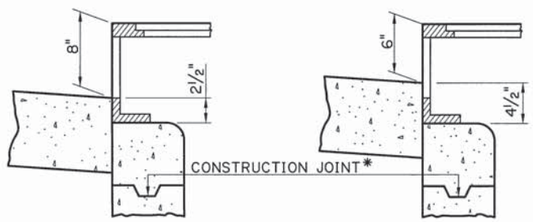

INLET CONFIGURATION

WHEN USED WITH 6" BARRIER CURB

WHEN USED WITH 4" MOUNTABLE CURB

*NOTE:
THE BASIN SHALL NOT BE CONSTRUCTED ABOVE BOTTOM OF PAVEMENT ELEVATION UNTIL THE PAVING ADJACENT TO THE BASIN IS IN PLACE.

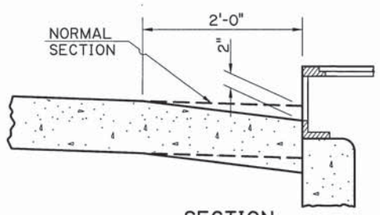

SECTION

SHOWING PAVEMENT SUMP TYPICAL

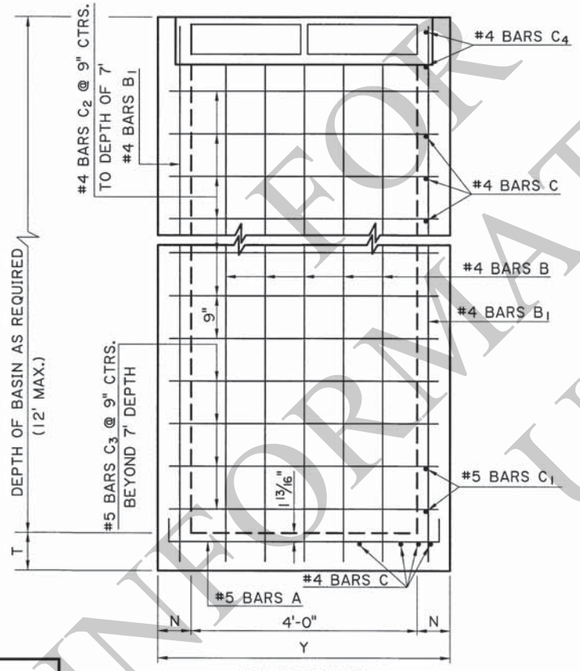

ELEVATION

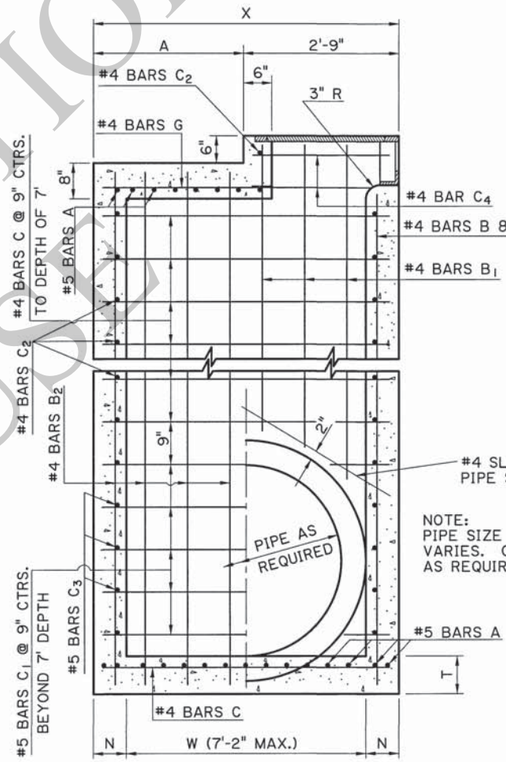

SECTION A-A

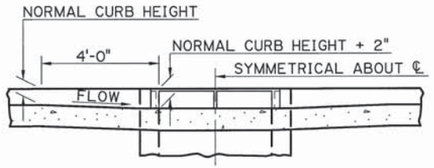

TRANSITION IN CURB HEIGHT
CATCH BASIN AT LOW POINT

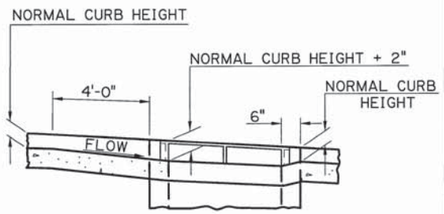

TRANSITION IN CURB HEIGHT
CATCH BASIN ON A GRADE

CONCRETE CATCH BASIN

PIPE DIA. ①	W ②	T	DEPTH LESS THAN 8'				DEPTH FROM 8' TO 12'			
			X	Y	N	A	X	Y	N	A
In	Ft-In	In	Ft-In	Ft-In	In	Ft-In	Ft-In	Ft-In	In	Ft-In
15 to 24	2-6	8	3-8	5-2	7	0-11	3-10	5-4	8	1-1
30	3-1	8	4-3	5-2	7	1-6	4-5	5-4	8	1-8
36	3-8	8	4-10	5-2	7	2-1	5-0	5-4	8	2-3
42	4-3	8	5-5	5-2	7	2-8	5-7	5-4	8	2-10
48	4-10	8	6-0	5-2	7	3-3	6-2	5-4	8	3-5
54	5-5	9	6-7	5-2	7	3-10	6-9	5-4	8	4-0
60	6-0	9	7-2	5-2	7	4-5	7-4	5-4	8	4-7
72	7-2	9	8-4	5-2	7	5-7	8-6	5-4	8	5-9

① REFERS TO SIDEWALL PIPE OR "TRUNKLINE". FRONTWALL OR "CROSSING PIPE" MAY NOT EXCEED 42".

② W AND X DIMENSIONS MAY BE VARIED FOR SKEWED PIPE, BUT W SHALL NOT EXCEED 7'-2".

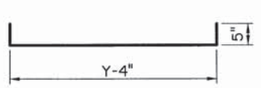

#5 BARS A

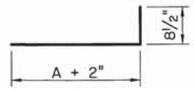

#4 BARS G

INFORMATIONAL USE ONLY

SHEET NUMBER

PARISH	CONTROL SECTION	STATE PROJECT

DESIGN	CHECK	DETAIL	CHECK	REVIEW	SERIES #
CDJ	HJB	KAJ	WMR		1 OF 1

APPROVED BY CHIEF ENGINEER: DATE: 08/19/2026

NO.	DATE	REVISION OR CHANGE ORDER DESCRIPTION	BY

CONCRETE CATCH BASIN
CURB OPENING
4" MOUNTABLE OR 6" BARRIER CURB
MAX. PIPES: 42" X 72", MAX. DEPTH: 12'

CB-06

DOTD
LOUISIANA DEPARTMENT OF TRANSPORTATION & DEVELOPMENT

STANDARD PLAN

6/11/2026 13:0

C:\Users\00267398\Desktop\New Borders\CB-06.dgn

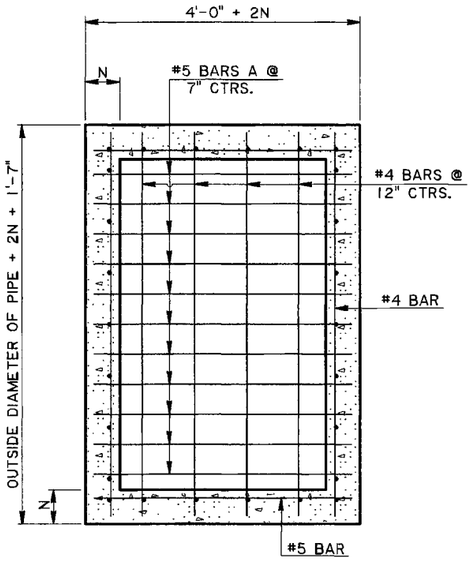

SECTION

SHOWING BOTTOM SLAB REINFORCING STEEL

NOTE:
THE BASIN SHALL NOT BE CONSTRUCTED ABOVE BOTTOM OF PAVEMENT ELEVATION UNTIL PAVEMENT ADJACENT TO THE BASIN IS IN PLACE.

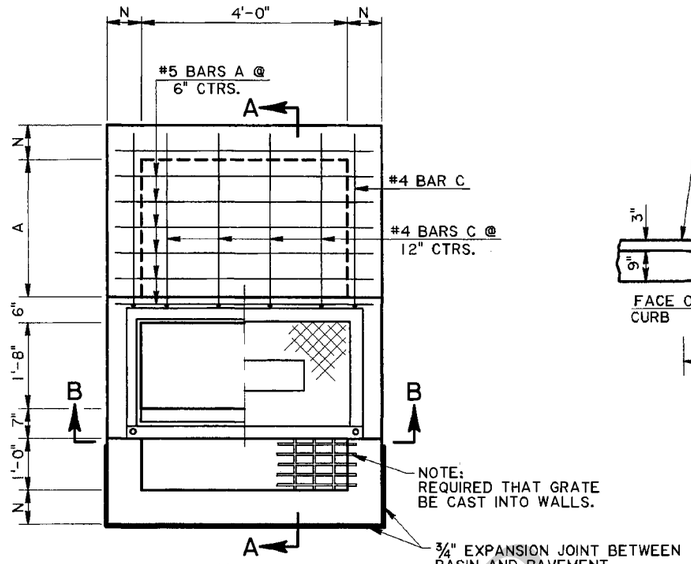

PLAN

FOR DETAILS OF METAL COVER, FRAME AND GRATE, SEE STD. PLAN MC-01, TYPE H & TYPE I.

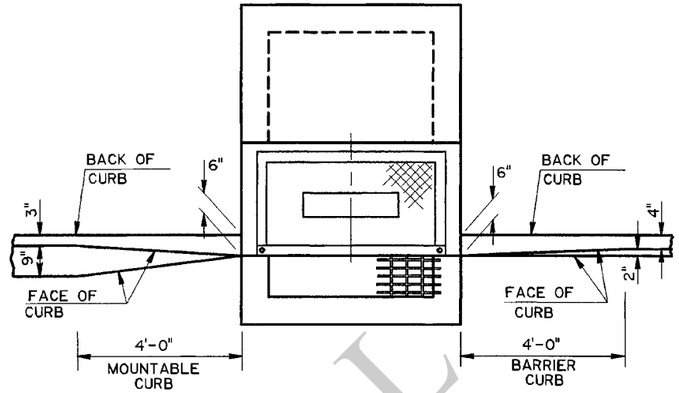

TRANSITION IN CURB WIDTH

(TYPICAL)

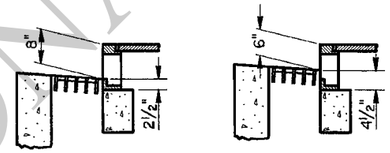

INLET CONFIGURATION

WHEN USED WITH 6" BARRIER CURB

WHEN USED WITH 4" MOUNTABLE CURB

DEPTH OF BASIN	N
FT	IN
LESS THAN 8	7
8 TO 12	8

PIPE DIAMETER	A	T
IN	FT-IN	IN
15 TO 24	0-4	8
30	0-11	8
36	1-6	8
42	2-1	8
48	2-8	8
54	3-3	9
60	3-10	9
72	5-0	10

NOTE:
DIMENSION "A" MAY BE VARIED FOR SKEWED PIPE, BUT MAY NOT EXCEED 5'-0".

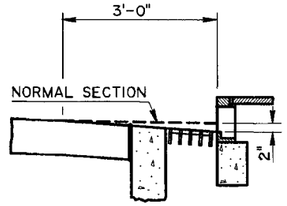

SECTION

(SHOWING PAVEMENT SUMP TYPICAL)

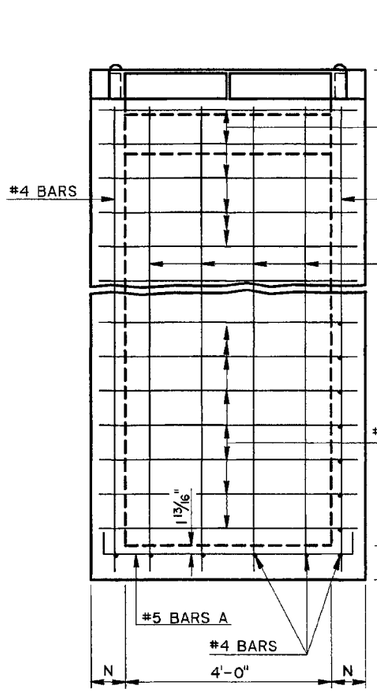

ELEVATION

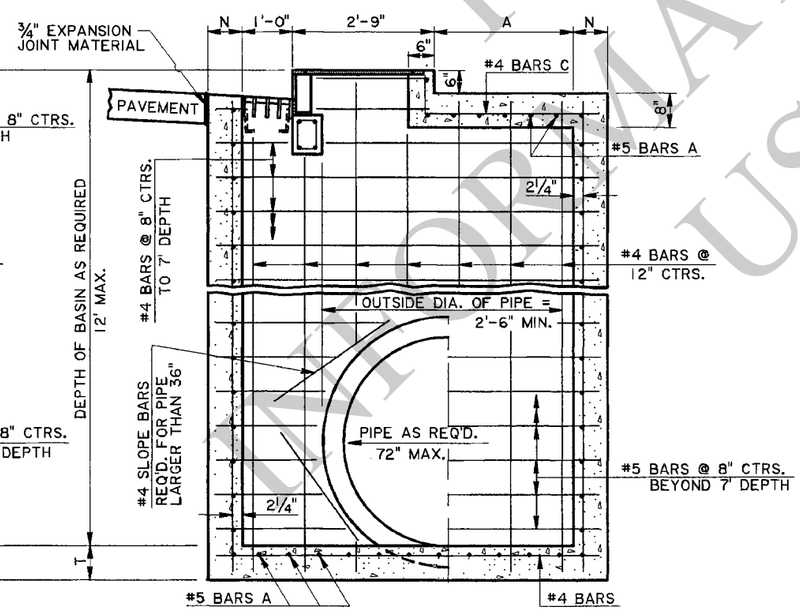

SECTION A-A

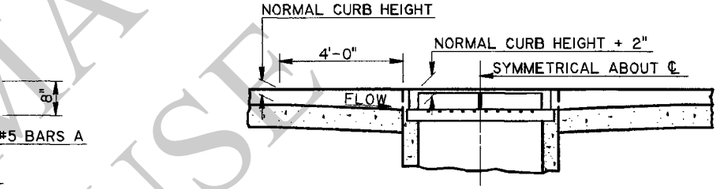

TRANSITION IN CURB HEIGHT CATCH BASIN AT LOW POINT

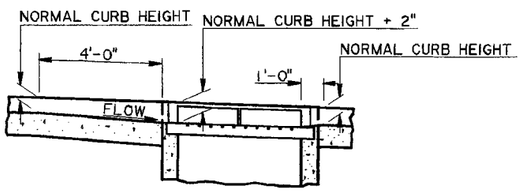

TRANSITION IN CURB HEIGHT CATCH BASIN ON A GRADE

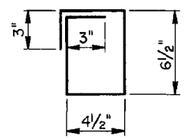

#3 BARS S

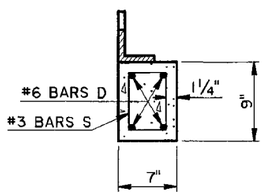

SECTION C-C

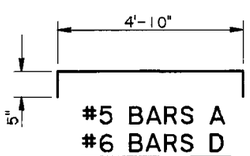

#5 BARS A
#6 BARS D

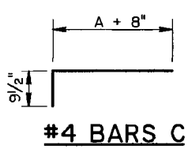

#4 BARS C

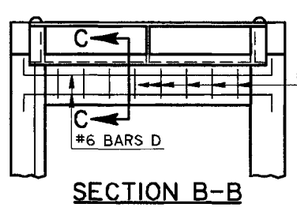

SECTION B-B

FOR INFORMATIONAL USE

SHEET NUMBER

PARISH | CONTROL SECTION | STATE PROJECT

DESIGN CDJ | DETAIL KAJ | REVIEW WMR | SERIES # 1 OF 1

CHECK | CHECK

APPROVED BY CHIEF ENGINEER:

DATE: 6/1/2026

NO. | DATE | REVISION OR CHANGE ORDER DESCRIPTION | BY

STATE OF LOUISIANA

CONCRETE CATCH BASIN

CURB AND GUTTER OPENING
4" Mountable or 6" Barrier Curb
Max. Pipes: 42" x 72", Max. Depth: 12'

CB-07

DOTD
LOUISIANA DEPARTMENT OF TRANSPORTATION & DEVELOPMENT

STANDARD PLAN

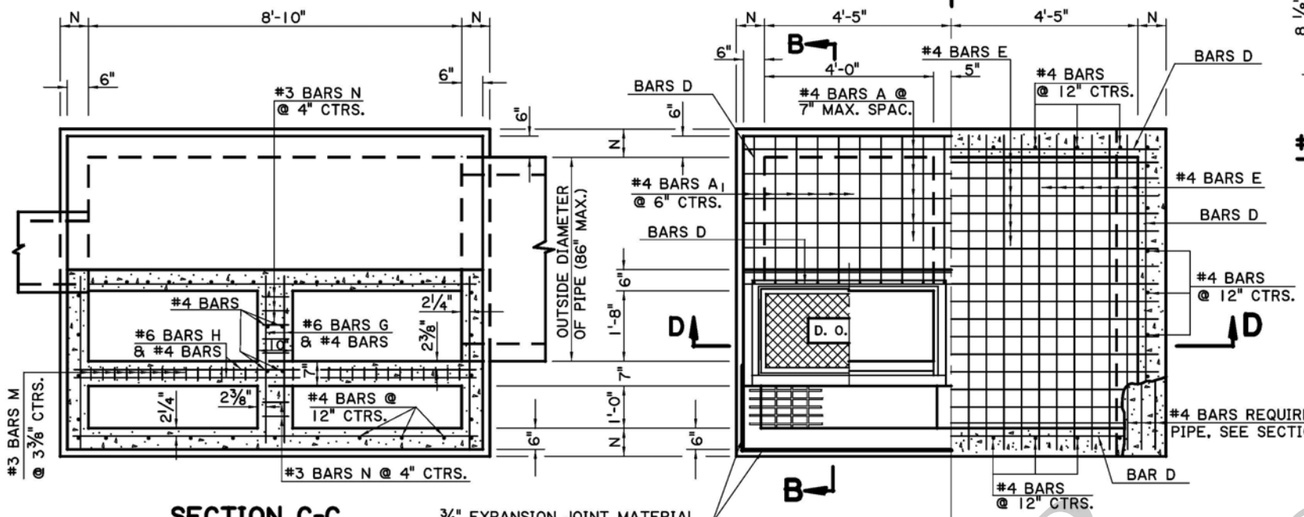

SECTION C-C

¾" EXPANSION JOINT MATERIAL BETWEEN BASIN AND PAVEMENT

PART PLAN
(SHOWING TOP SLAB)

PART SECTIONAL PLAN
(SHOWING REINFORCING IN BOTTOM SLAB AND WALLS)

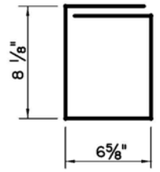

#3 BARS N

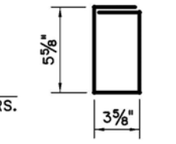

#3 BARS M

GENERAL NOTES:

1. CATCH BASIN IS DESIGNED ACCORDING TO 4TH ED. 2007 AASHTO LRFD PROCEDURES. SECTION 702 OF THE DOTD STANDARD SPECIFICATIONS SHALL APPLY.
2. CONCRETE: ALL CONCRETE SHALL BE CLASS "M" MINOR STRUCTURE. ALL EXPOSED EDGES SHALL BE CHAMFERED ¾ IN. EXCEPT AS NOTED.
3. REINFORCING STEEL: REINFORCING STEEL SHALL BE GRADE 60. DIMENSIONS ARE TO BAR CENTERS. MINIMUM COVER FOR REINFORCING BARS SHALL BE 2 IN. CLEAR UNLESS SHOWN OTHERWISE.
4. AS DEPTH INCREASES THE WALL AND SLAB THICKNESSES AND REINFORCEMENT SHOULD BE INCREASED AS SHOWN IN THE TABLE BELOW. THE CONTRACTOR HAS THE OPTION TO PROVIDE THE MAXIMUM REQUIRED WALL THICKNESS FOR THE FULL DEPTH OF THE STRUCTURE.

DEPTH RANGE	WALLS			BOTTOM SLAB		
	N	D BARS		T	E BARS	
	IN.	SIZE	SPAC.,IN.	IN.	SIZE	SPAC.,IN.
0' TO 7'	6.0	4	4.5	6.0	4	7.5
7'-1" TO 11'	7.0	4	5.0	6.5	4	5.5
11'-1" TO 18'	8.0	5	5.5	7.5	4	4.5
18'-1" TO 20'	8.5	5	5.5	8.0	4	4.0

5. FOR DETAILS OF METAL COVER, FRAME, AND GRATE, SEE STD. PLAN MC-01, TYPE H & TYPE I.
6. THE CONTRACTOR WILL NOT POUR ABOVE THE BOTTOM OF THE SLAB UNTIL THE PAVING ADJACENT TO THE CATCH BASIN HAS BEEN COMPLETED.

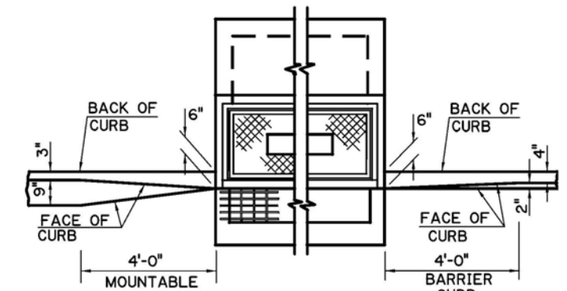

TRANSITION IN CURB WIDTH
(TYPICAL)

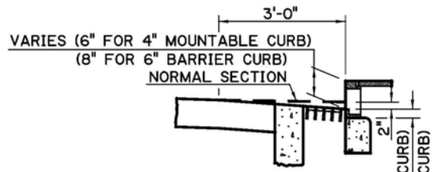

SECTION
(SHOWING PAVEMENT SUMP TYPICAL)

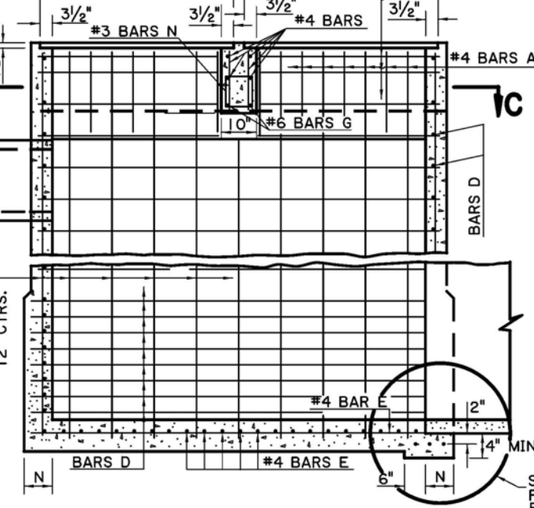

SECTION D-D

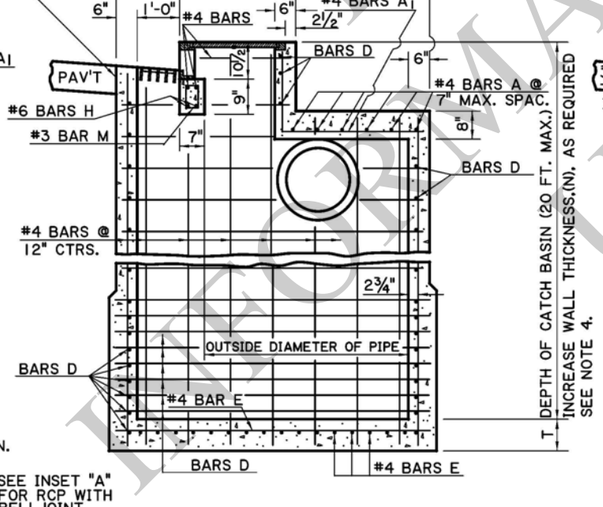

SECTION B-B

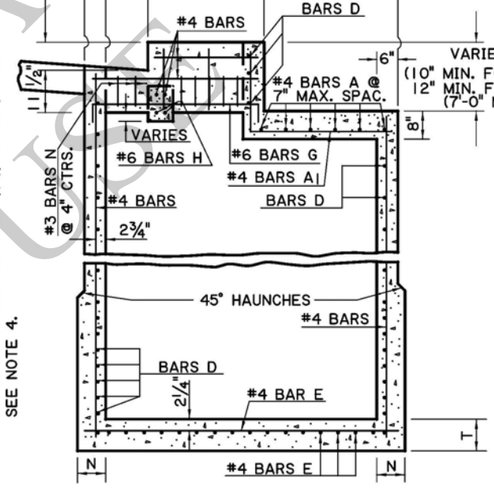

SECTION A-A
SHOWING MOUNTABLE CURB

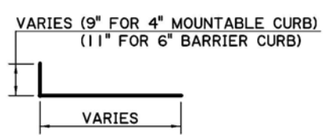

#4 BARS A1

INSET "A"
RCP WITH BELLJOINT

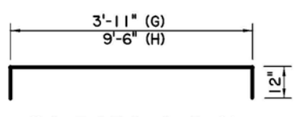

#6 BARS G & H

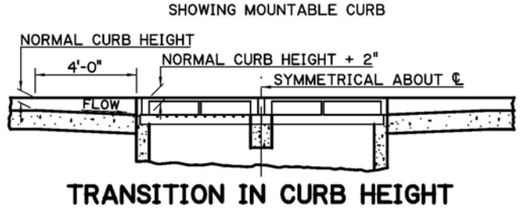

TRANSITION IN CURB HEIGHT CATCH BASIN AT LOW POINT

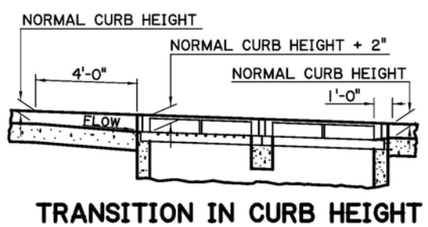

TRANSITION IN CURB HEIGHT CATCH BASIN ON A GRADE

FOR INFORMATIONAL USE

SHEET NUMBER

PARISH | CONTROL SECTION | STATE PROJECT

DESIGN PAA | DETAIL KAJ | REVIEW WMR | SERIES # 1 OF 1

CHECK | CHECK

APPROVED BY CHIEF ENGINEER: DATE: 6/1/2026

NO. | DATE | REVISION OR CHANGE ORDER DESCRIPTION | BY

CONCRETE CATCH BASIN
DOUBLE COMBINATION TYPE
4' MOUNTABLE OR 6" BARRIER CURB
MAX. PIPE: 72" X 84," MAX. DEPTH: 20'

CB-08

DOTD
LOUISIANA DEPARTMENT OF TRANSPORTATION & DEVELOPMENT

STANDARD PLAN

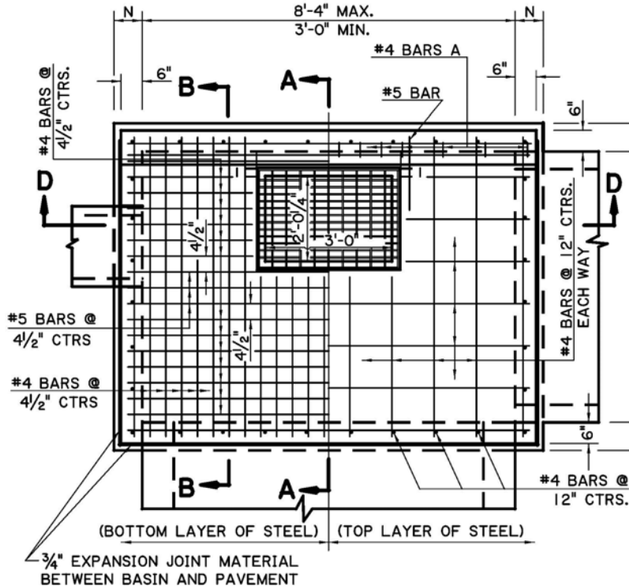

TOP SLAB PLAN

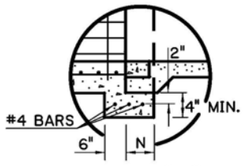

INSET "A"

RCP WITH BELLJOINT

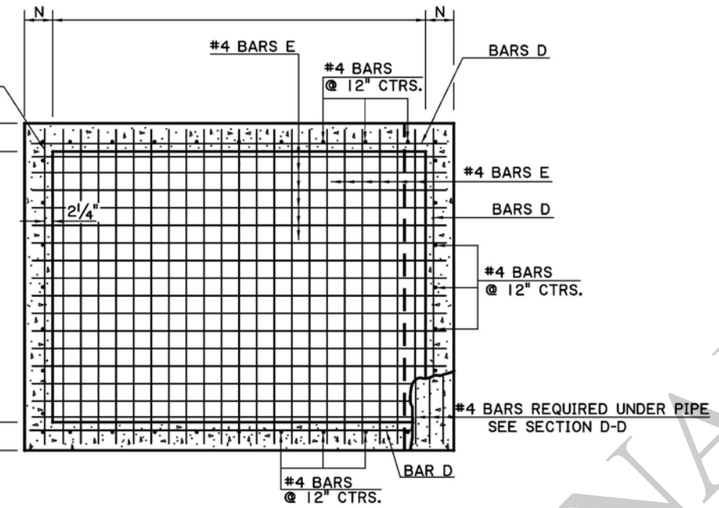

SECTIONAL PLAN

(SHOWING REINFORCING IN BOTTOM SLAB AND WALLS)

GENERAL NOTES:

1. CATCH BASIN IS DESIGNED ACCORDING TO 4TH ED. 2007 AASHTO LRFD PROCEDURES. SECTION 702 OF THE DOTD STANDARD SPECIFICATIONS SHALL APPLY.
2. CONCRETE: ALL CONCRETE SHALL BE CLASS "M" MINOR STRUCTURE. ALL EXPOSED EDGES SHALL BE CHAMFERED ¾ IN. EXCEPT AS NOTED.
3. REINFORCING STEEL: REINFORCING STEEL SHALL BE GRADE 60. DIMENSIONS ARE TO BAR CENTERS. MINIMUM COVER FOR REINFORCING BARS SHALL BE 2 IN. CLEAR UNLESS SHOWN OTHERWISE.
4. AS DEPTH INCREASES THE WALL AND SLAB THICKNESSES AND REINFORCEMENT SHOULD BE INCREASED AS SHOWN IN THE TABLE BELOW. THE CONTRACTOR HAS THE OPTION TO PROVIDE THE MAXIMUM REQUIRED WALL THICKNESS FOR THE FULL DEPTH OF THE STRUCTURE.

DEPTH RANGE	WALLS			BOTTOM SLAB		
	N	D BARS		T	E BARS	
	IN.	SIZE	SPAC.,IN.	IN.	SIZE	SPAC.,IN.
0' TO 9'	6.0	4	5.0	6.0	4	6.5
9'-1" TO 12'	6.5	4	4.5	6.5	4	6.0
12'-1" TO 16'	7.0	5	5.5	7.0	4	5.0
16'-1" TO 20'	7.5	5	5.0	7.5	4	4.5

5. FOR DETAILS OF METAL GRATE AND GRATE SEAT, SEE STD. PLAN MC-01, TYPE C & TYPE F.
6. THE CONTRACTOR WILL NOT POUR ABOVE THE BOTTOM OF THE SLAB UNTIL THE PAVING ADJACENT TO THE CATCH BASIN HAS BEEN COMPLETED.

#4 BARS A

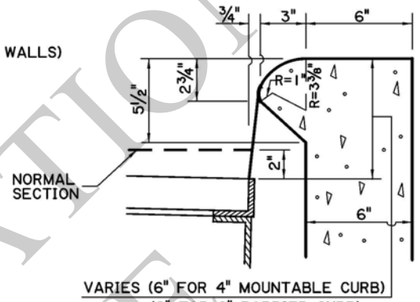

DETAIL OF OPENING IN CURB

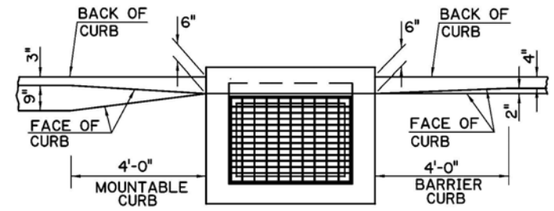

TRANSITION IN CURB WIDTH

(TYPICAL)

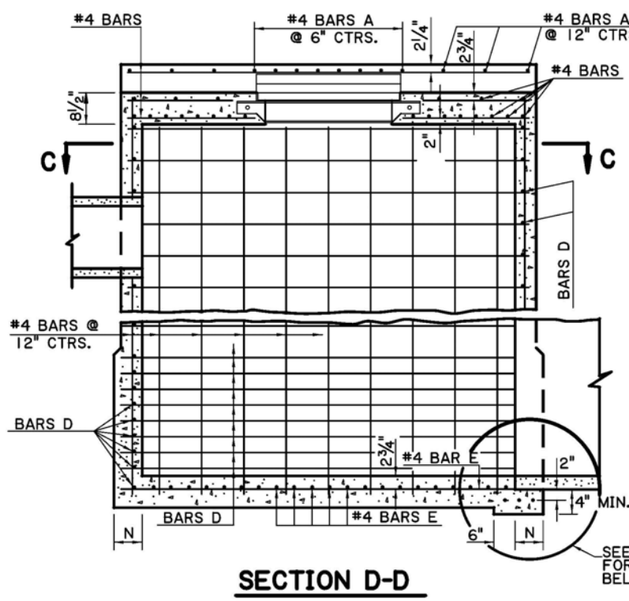

SECTION D-D

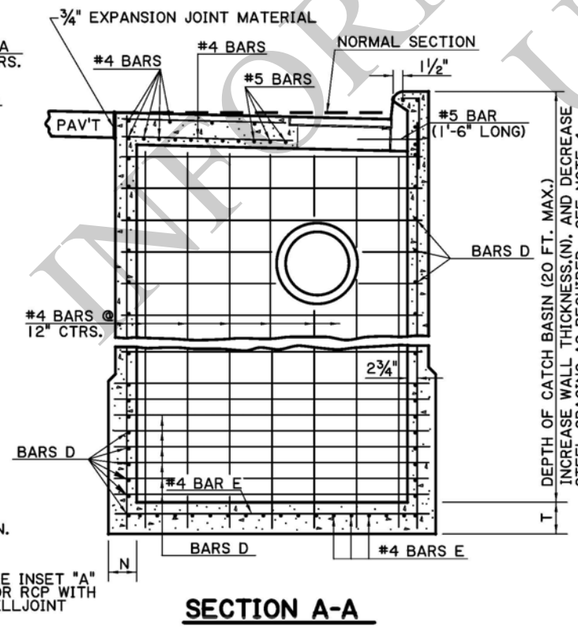

SECTION A-A

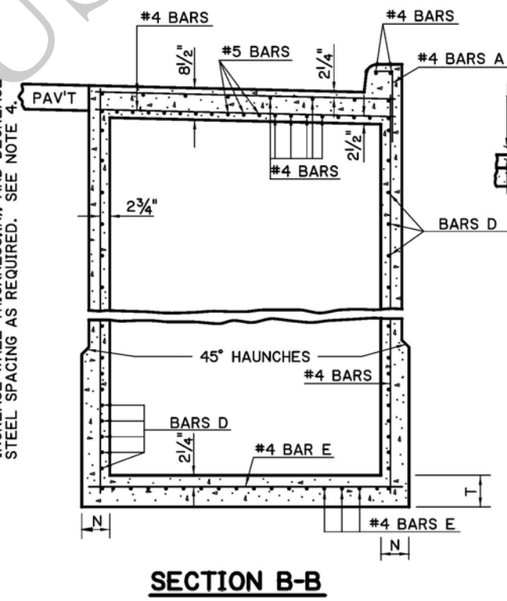

SECTION B-B

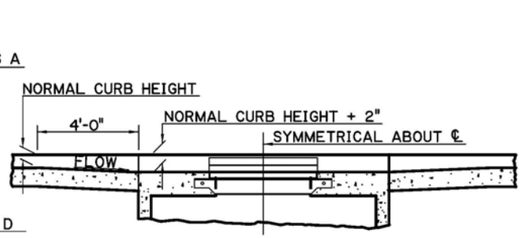

TRANSITION IN CURB HEIGHT CATCH BASIN AT LOW POINT

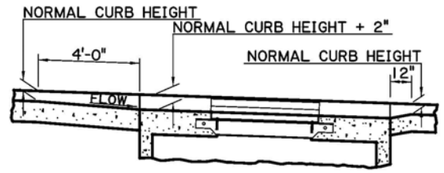

TRANSITION IN CURB HEIGHT CATCH BASIN ON A GRADE

FOR INFORMATIONAL USE ONLY

SHEET NUMBER

PARISH | CONTROL SECTION | STATE PROJECT

DESIGN PAA | DETAIL KAJ | SERIES # 1 OF 1
CHECK | CHECK WMR | REVIEW

APPROVED BY CHIEF ENGINEER:

DATE: 6/1/2026

NO.	DATE	REVISION OR CHANGE ORDER DESCRIPTION	BY

COMBINATION TYPE CATCH BASIN
(TRUNKLINE UNDER PAVEMENT)
4" MOUNTABLE OR 6" BARRIER CURB
MAX. PIPE: 84" X 84" RCP, MAX. DEPTH: 20'

CB-09

DOTD
LOUISIANA DEPARTMENT OF TRANSPORTATION & DEVELOPMENT

STANDARD PLAN

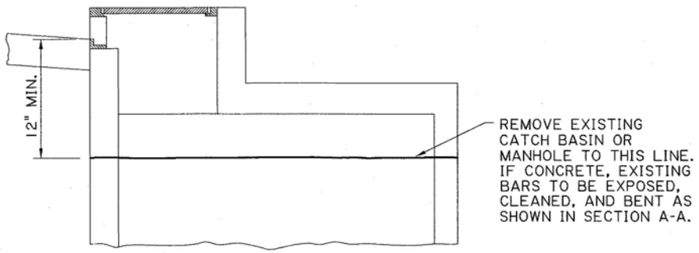

SECTION
EXISTING STRUCTURE

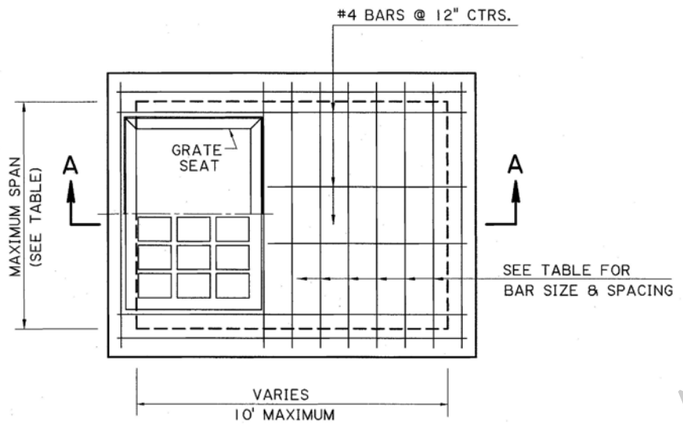

CATCH BASIN PLAN
SHOWING NEW CONSTRUCTION
GRATE TO BE TYPE "B" OR "C".
TYPE "B" SHOWN.*

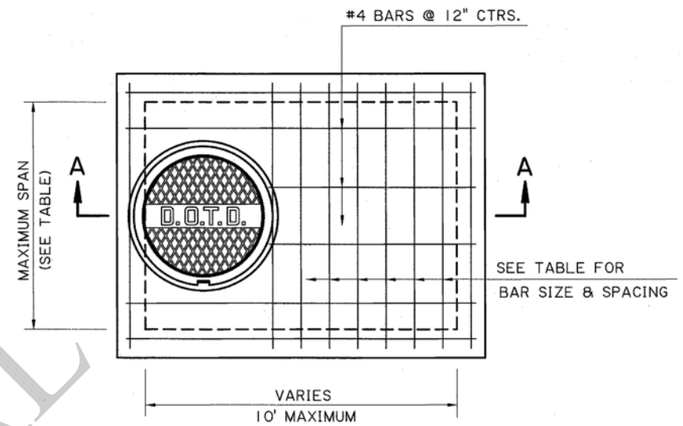

MANHOLE PLAN
SHOWING NEW CONSTRUCTION

* TYPE "B" AND "C" GRATES SHOULD NOT BE USED IN THE TRAVEL LANE.

TYPE "B" GRATE IS TO BE USED WHERE NO PEDESTRIAN TRAFFIC AND NO VEHICULAR TRAFFIC IS EXPECTED. (DITCHES, ETC.)

TYPE "C" GRATE IS TO BE USED WHERE PEDESTRIAN TRAFFIC AND/OR LIGHT VEHICULAR TRAFFIC IS EXPECTED. (DRIVEWAYS, SHOULDERS, ETC.)

GENERAL NOTES:

DIMENSIONS RELATING TO REINFORCED STEEL ARE TO BARS CENTERS.

FOR DETAILS OF CATCH BASIN GRATE AND SEAT, SEE STD. PLAN MC-01 (TYPE B OR C).

FOR DETAILS OF MANHOLE CAST IRON COVER AND SEAT, SEE STD. PLAN MC-01 (TYPE K OR K_1).

PROJECT SPECIFICATIONS FOR MANHOLES, JUNCTION BOXES AND CATCH BASINS SHALL APPLY.

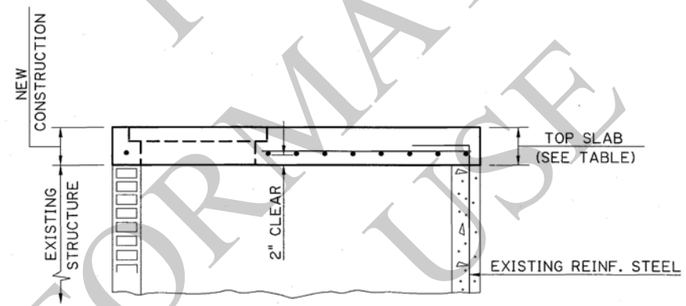

SECTION A-A
SHOWING NEW CONSTRUCTION FOR CATCH BASIN OR MANHOLE
(FOR CONCRETE OR BRICK WALL)

MAXIMUM SPAN	TOP SLAB	BAR SIZE	BAR SPACING
4'	8"	#5	8"
6'	8½"	#5	6"
8'	9½"	#5	5"
9'	10½"	#5	4"

ADJUSTMENT/CONVERSION OF EXISTING CATCH BASINS OR MANHOLES

NOTE: 1) FOR ALL CATCH BASIN ADJUSTMENTS, THIS DETAIL SHOULD BE INCLUDED IN THE PLANS AND PAID FOR WITH APPROPRIATE PAY ITEMS.

2) FOR ALL CATCH BASIN AND MANHOLE CONVERSIONS (CATCH BASIN TOP TO MANHOLE TOP OR MANHOLE TOP TO CATCH BASIN TOP), THIS DETAIL SHOULD BE INCLUDED IN THE PLANS ALONG WITH THE APPROPRIATE STANDARD PLAN/SPECIAL DETAIL TO CONSTRUCT THE NEW TOP. IF NO STANDARD PLAN/SPECIAL DETAIL IS INCLUDED, THE TOP IS TO BE BUILT AS SHOWN ON THIS DETAIL. ALL CONVERSIONS SHOULD BE PAID FOR WITH APPROPRIATE PAY ITEMS.

3) FOR ALL MANHOLE ADJUSTMENTS GREATER THAN 7", THIS DETAIL SHOULD BE INCLUDED IN THE PLANS AND PAID FOR WITH APPROPRIATE PAY ITEMS.

4) FOR ALL MANHOLE ADJUSTMENTS LESS THAN OR EQUAL TO 7", MANHOLE ADJUSTMENT RINGS MAY BE USED. SHOULD BE PAID FOR WITH APPROPRIATE PAY ITEMS AND NO DETAIL IS NEEDED IN THE PLANS. REFER TO STANDARD PLAN MC-01.

5) FOR ALL CATCH BASIN/MANHOLE ADJUSTMENTS, CLEAN EXISTING GRATES/FRAMES AS PER PROJECT SPECIFICATIONS FOR MANHOLES, JUNCTION BOXES AND AND CATCH BASINS.

FOR INFORMATIONAL USE

SHEET NUMBER

PARISH | CONTROL SECTION | STATE PROJECT

DESIGN PAA | CHECK MH | DETAIL KAJ | CHECK MH | REVIEW | SERIES # 1 OF 1

APPROVED BY CHIEF ENGINEER: DATE: 6/1/2026

NO.	DATE	REVISION OR CHANGE ORDER DESCRIPTION	BY

STATE OF LOUISIANA DEPARTMENT OF TRANSPORTATION AND DEVELOPMENT

ADJUSTMENT/CONVERSION OF EXISTING CATCH BASINS OR MANHOLES

CB-ADJUST

DOTD LOUISIANA DEPARTMENT OF TRANSPORTATION & DEVELOPMENT

STANDARD PLAN

2/26/2019 09:20

F.A.P.	STATE PROJECT	PARISH	SHEET NO.

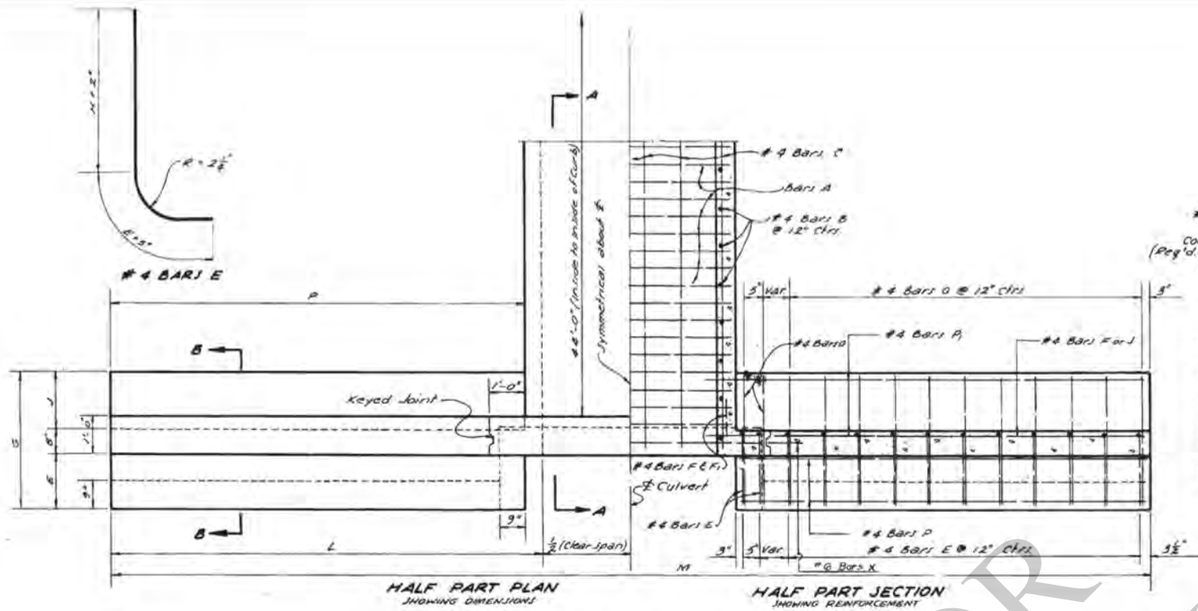

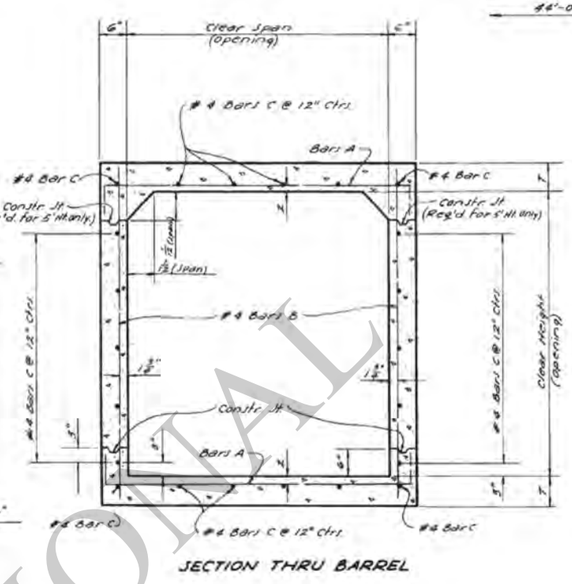

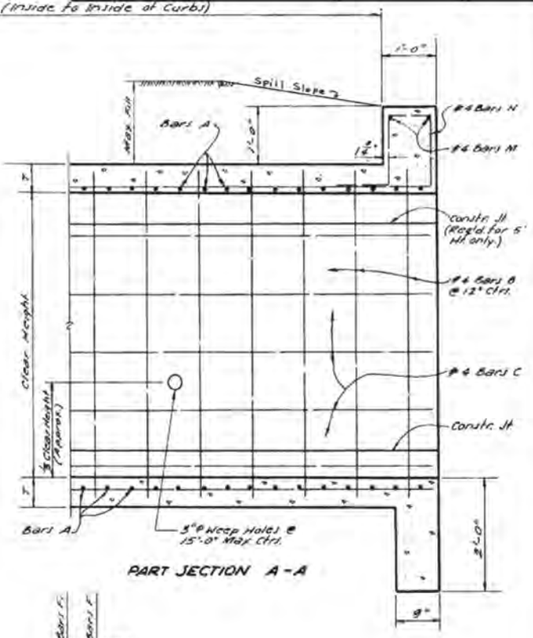

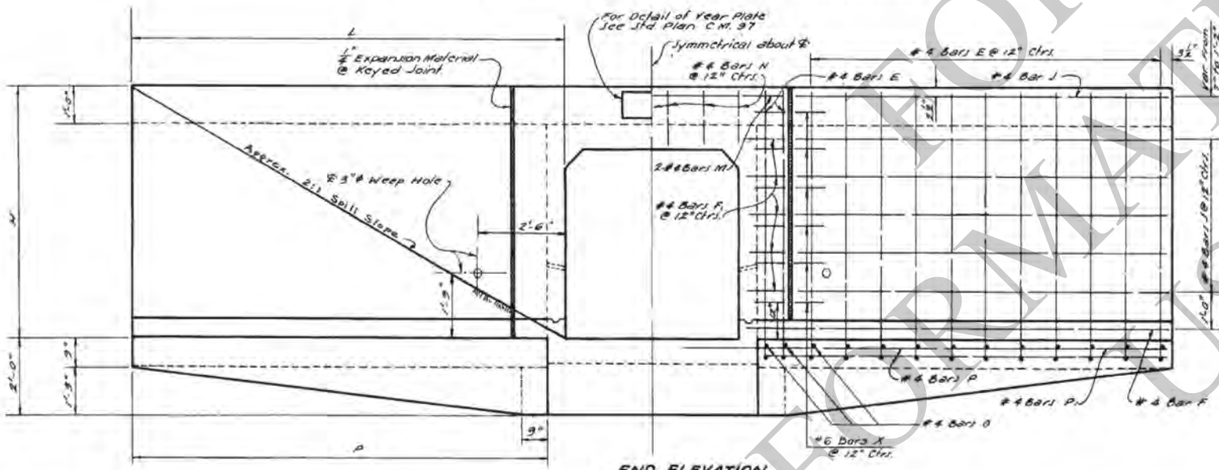

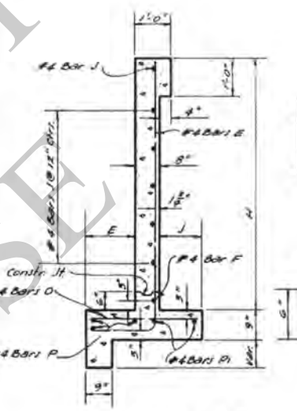

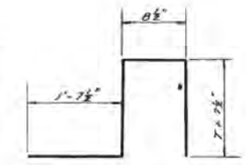

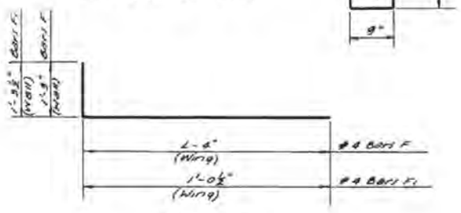

GENERAL NOTES:

CONSTRUCTION SPECIFICATIONS: Latest Approved La. Dept. of Highways Std. Specs.
DESIGN SPECIFICATIONS: A.A.S.H.O. 1957 as amended to Dec. 31, 1958.
LIVE LOAD: H20-S16-44.
All Exposed Corners to have ¾" Chamfer unless otherwise noted.
Reinforcement shall be Billet-Steel A.S.T.M. A615 or Rail-Steel A.S.T.M. A616 or Axle-Steel A.S.T.M. A617.

Dimensions relating to Reinforcing Steel are to Bar Centers.
Concrete to be class "A".
A 1'-6" Square of Plastic Filter Cloth (See Qualified Products List) shall be placed in contact with Concrete behind each Weep Hole, in addition to approx. 2 Cu. Ft. of Concrete Sand.
For Details of Joints, See Std. Plan C.M.-48.

DIMENSIONS

OPENINGS			MAX. FILL		BARREL		WINGS & CURBS						
CLEAR SPAN	CLEAR HEIGHT	AREA	TOP SLAB	BOTT. SLAB	WALLS	T	Z	E	J	G	H	L	P	M
FEET	FT.-IN.	SQ. FT.	FEET	FEET	FEET	IN.	IN.	FT.-IN.	FT.-IN.	FT.-IN.	FT.-IN.	FT.-IN.	FT.-IN.	FT.-IN.
2	2-0	4	44	42	54	6	1⅜	0-9	0-8	2-1	3-6	6-0	5-6	16-0
3	2-0	6	28	27	51	6½	1 13/16	0-9	0-8	2-1	3-6½	6-1	5-7	15-2
	2-6	7.5	28	27	35	6½	1 13/16	0-9	0-8	2-1	4-0½	7-1	6-7	17-2
	3-0	9	28	27	24	6½	1 13/16	1-0	0-8	2-4	4-6½	8-1	7-7	19-2
4	2-0	8	21	20	50	7	1 13/16	0-9	0-8	2-1	3-7	6-2	5-8	16-4
	2-6	10	21	20	34	7	1 13/16	0-9	0-8	2-1	4-1	7-2	6-8	18-4
	3-0	12	21	20	24	7	1 13/16	1-0	0-8	2-4	4-7	8-2	7-8	20-4
	4-0	16	21	20	13	7	1 13/16	1-3	0-10	2-9	5-7	10-2	9-8	26-4
5	2-0	10	17	15	46	7½	1 13/16	0-9	0-8	2-1	3-9½	6-9	5-10	17-8
	2-6	12.5	17	15	33	7½	1 13/16	0-9	0-8	2-1	4-1½	7-4	6-10	19-8
	3-0	15	17	15	23	7½	1 13/16	1-0	0-8	2-4	4-7½	8-4	7-10	21-8
	4-0	20	17	15	13	7½	1 13/16	1-3	0-10	2-9	5-7½	10-4	9-10	25-8
	5-0	25	17	15	7	7½	1 13/16	1-5	1-2	3-5	6-7½	12-4	11-10	29-8

BILL OF REINFORCING STEEL FOR 44'-0" CULVERT

| BARREL REINFORCEMENT | | | | | |

10/18/2018 15:25

APPROVED BY: Dongan D. White 1-11-78
CHIEF ENGINEER DATE

CC·S·M·4-6·S·45°·1

F.A.P.	STATE PROJECT	PARISH	SHEET NO.

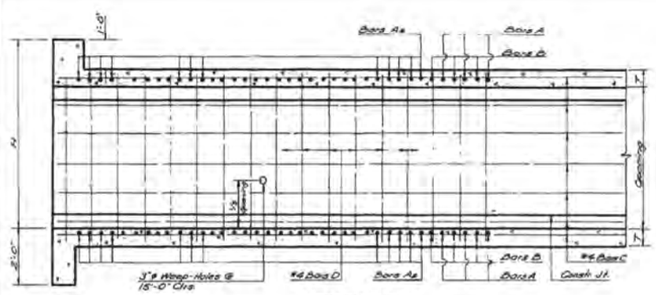

SECTION A-A

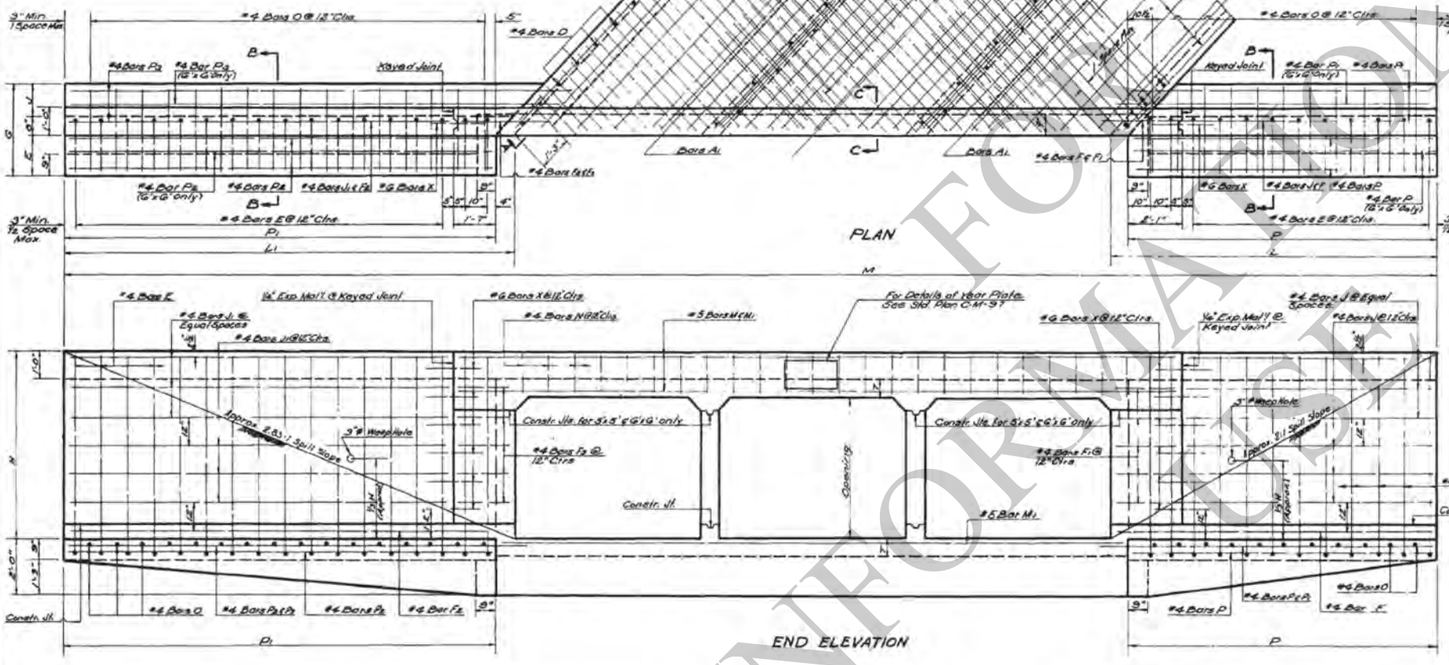

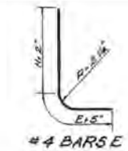

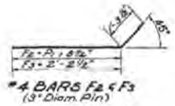

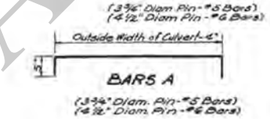

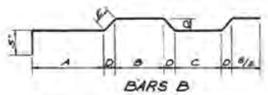

DIMENSIONS FOR BARS B							
SIZE	PW DIAM	A	B	C	D	E	
4x4	3 5/8"	3'-1 7/8"	2'-2 3/8"	1'-0 3/8"	3 5/8"	4 1/2"	
5x5	3 5/8"	3'-1 7/8"	2'-0 7/8"	2'-2 3/8"	3 5/8"	5 1/8"	
6x6	4 1/2"	4'-1 3/8"	3'-1 3/8"	2'-7 1/8"	4 1/2"	6"	

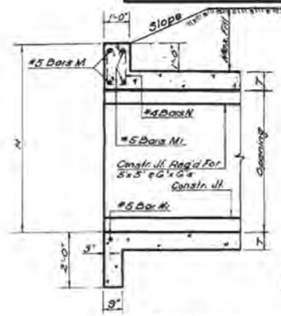

SECTION C-C

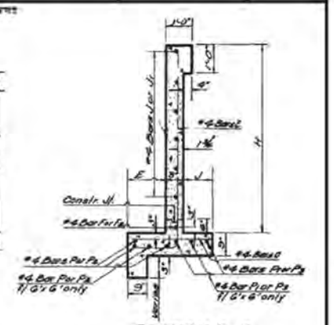

SECTION B-B

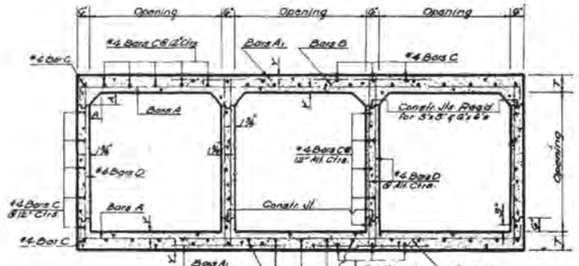

SECTION THRU BARREL

DIMENSIONS																				QUANTITIES				OPENINGS	
OPENINGS			MAX. FILL		BARREL			WINGS AND CURBS												PER LIN. FT. OF BARREL		44'-0" CULVERT			
SIZE	No.	AREA	SLAB	WALLS	T	A	Y	E	J	G	H	L	Li	P	Pi	M				STEEL	CONCRETE	STEEL	CONCRETE	No.	SIZE
Feet		Sq. Ft.	Ft	Ft	In.	In.	In.	Ft-In.	Ft-In.	Ft-In.	Ft-In.	Ft-In.	Ft-In.	Ft-In.	Ft-In.	Ft-In.				Pounds	Cu. Yds.	Pounds	Cu. Yds.		
4x4	E	32	25	13	7	4	1 3/16	1'-3	0'-10	2'-9	5'-7	10'-5 1/2	14'-1 1/2	9'-9	13'-5	36'-7 1/4				85.26	0.6409	4393	43.60	E	
	3	48														42'-11 5/8				127.77	0.9139	7117	57.34	3	
	4	64	32													49'-3 3/4				170.27	1.1862	9355	71.09	4	4x4
	5	80														55'-8 5/8				212.99	1.4588	11652	84.82	5	
	G	96														62'-0 3/8				255.27	1.7315	14015	98.55	G	
5x5	E	50	31	17	7 1/8	5	1 3/16	1'-5	1'-2	3'-3	6'-7 1/2	12'-8 1/8	17'-1 1/2	11'-9	16'-5	44'-5 1/4				113.32	0.8231	6378	57.21	E	
	3	75														52'-2 1/2				170.56	1.1767	9504	74.84	3	
	4	100	37													59'-11 3/4				227.60	1.5303	12517	93.68	4	5x5
	5	125														67'-9 3/4				284.64	1.8840	15726	116.40	5	
	G	150														75'-6 1/2				341.68	2.2377	18930	138.14	G	
G x G	E	72	45	20	8	6	1 7/16	1'-7	1'-6	3'-9	7'-8	14'-5 1/2	20'-1 3/8	13'-9	19'-5	52'-3 7/8				137.72	1.0185	8156	78.23	E	
	3	108														61'-5 3/16				206.69	1.4659	11750	94.26	3	
	4	144														70'-7 7/16				276.06	1.8012	15468	116.29	4	G x G
	5	180														79'-10				345.23	2.3426	19398	138.32	5	
	G	216														89'-0 5/8				414.40	2.7839	23403	160.35	G	

BILL OF REINFORCING STEEL FOR 44'-0" CULVERT

| OPENINGS | | BARREL REINFORCEMENT | | | | | | | | | | | | | | | | | | | | | | | | | | | | | | CURB AND WING REINFORCEMENT | | | | | | | | | | | | | | | | | | |

F.A.P.	STATE PROJECT	PARISH	SHEET NO.

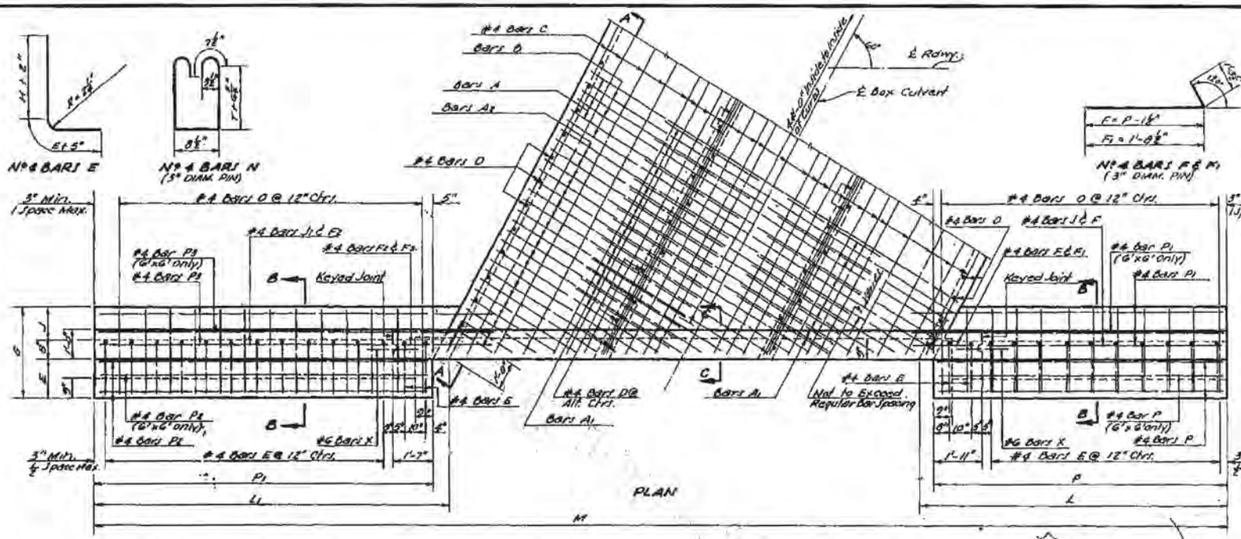
#4 Bars C
Bars B
Bars A
Bars A1
#4 Bars D
Bars E
Bars F
Bars G
Bars H
Bars I
Bars J
Bars K
Bars L
Bars M
Bars N
Bars O
Bars P
Bars Q
Bars R
Bars S
Bars T
Bars U
Bars V
Bars W
Bars X
Bars Y
Bars Z
Bars A1
Bars A2
Bars AA
Bars AB
Bars AC
Bars AD
Bars AE
Bars AF
Bars AG
Bars AH
Bars AI
Bars AJ
Bars AK
Bars AL
Bars AM
Bars AN
Bars AO
Bars AP
Bars AQ
Bars AR
Bars AS
Bars AT
Bars AU
Bars AV
Bars AW
Bars AX
Bars AY
Bars AZ
Bars BA
Bars BB
Bars BC
Bars BD
Bars BE
Bars BF
Bars BG
Bars BH
Bars BI
Bars BJ
Bars BK
Bars BL
Bars BM
Bars BN
Bars BO
Bars BP
Bars BQ
Bars BR
Bars BS
Bars BT
Bars BU
Bars BV
Bars BW
Bars BX
Bars BY
Bars BZ
Bars CA
Bars CB
Bars CC
Bars CD
Bars CE
Bars CF
Bars CG
Bars CH
Bars CI
Bars CJ
Bars CK
Bars CL
Bars CM
Bars CN
Bars CO
Bars CP
Bars CQ
Bars CR
Bars CS
Bars CT
Bars CU
Bars CV
Bars CW
Bars CX
Bars CY
Bars CZ
Bars DA
Bars DB
Bars DC
Bars DD
Bars DE
Bars DF
Bars DG
Bars DH
Bars DI
Bars DJ
Bars DK
Bars DL
Bars DM
Bars DN
Bars DO
Bars DP
Bars DQ
Bars DR
Bars DS
Bars DT
Bars DU
Bars DV
Bars DW
Bars DX
Bars DY
Bars DZ
Bars EA
Bars EB
Bars EC
Bars ED
Bars EE
Bars EF
Bars EG
Bars EH
Bars EI
Bars EJ
Bars EK
Bars EL
Bars EM
Bars EN
Bars EO
Bars EP
Bars EQ
Bars ER
Bars ES
Bars ET
Bars EU
Bars EV
Bars EW
Bars EX
Bars EY
Bars EZ
Bars FA
Bars FB
Bars FC
Bars FD
Bars FE
Bars FF
Bars FG
Bars FH
Bars FI
Bars FJ
Bars FK
Bars FL
Bars FM
Bars FN
Bars FO
Bars FP
Bars FQ
Bars FR
Bars FS
Bars FT
Bars FU
Bars FV
Bars FW
Bars FX
Bars FY
Bars FZ
Bars GA
Bars GB
Bars GC
Bars GD
Bars GE
Bars GF
Bars GG
Bars GH
Bars GI
Bars GJ
Bars GK
Bars GL
Bars GM
Bars GN
Bars GO
Bars GP
Bars GQ
Bars GR
Bars GS
Bars GT
Bars GU
Bars GV
Bars GW
Bars GX
Bars GY
Bars GZ
Bars HA
Bars HB
Bars HC
Bars HD
Bars HE
Bars HF
Bars HG
Bars HH
Bars HI
Bars HJ
Bars HK
Bars HL
Bars HM
Bars HN
Bars HO
Bars HP
Bars HQ
Bars HR
Bars HS
Bars HT
Bars HU
Bars HV
Bars HW
Bars HX
Bars HY
Bars HZ
Bars IA
Bars IB
Bars IC
Bars ID
Bars IE
Bars IF
Bars IG
Bars IH
Bars II
Bars IJ
Bars IK
Bars IL
Bars IM
Bars IN
Bars IO
Bars IP
Bars IQ
Bars IR
Bars IS
Bars IT
Bars IU
Bars IV
Bars IW
Bars IX
Bars IY
Bars IZ
Bars JA
Bars JB
Bars JC
Bars JD
Bars JE
Bars JF
Bars JG
Bars JH
Bars JI
Bars JJ
Bars JK
Bars JL
Bars JM
Bars JN
Bars JO
Bars JP
Bars JQ
Bars JR
Bars JS
Bars JT
Bars JU
Bars JV
Bars JW
Bars JX
Bars JY
Bars JZ
Bars KA
Bars KB
Bars KC
Bars KD
Bars KE
Bars KF
Bars KG
Bars KH
Bars KI
Bars KJ
Bars KK
Bars KL
Bars KM
Bars KN
Bars KO
Bars KP
Bars KQ
Bars KR
Bars KS
Bars KT
Bars KU
Bars KV
Bars KW
Bars KX
Bars KY
Bars KZ
Bars LA
Bars LB
Bars LC
Bars LD
Bars LE
Bars LF
Bars LG
Bars LH
Bars LI
Bars LJ
Bars LK
Bars LL
Bars LM
Bars LN
Bars LO
Bars LP
Bars LQ
Bars LR
Bars LS
Bars LT
Bars LU
Bars LV
Bars LW
Bars LX
Bars LY
Bars LZ
Bars MA
Bars MB
Bars MC
Bars MD
Bars ME
Bars MF
Bars MG
Bars MH
Bars MI
Bars MJ
Bars MK
Bars ML
Bars MM
Bars MN
Bars MO
Bars MP
Bars MQ
Bars MR
Bars MS
Bars MT
Bars MU
Bars MV
Bars MW
Bars MX
Bars MY
Bars MZ
Bars NA
Bars NB
Bars NC
Bars ND
Bars NE
Bars NF
Bars NG
Bars NH
Bars NI
Bars NJ
Bars NK
Bars NL
Bars NM
Bars NN
Bars NO
Bars NP
Bars NQ
Bars NR
Bars NS
Bars NT
Bars NU
Bars NV
Bars NW
Bars NX
Bars NY
Bars NZ
Bars OA
Bars OB
Bars OC
Bars OD
Bars OE
Bars OF
Bars OG
Bars OH
Bars OI
Bars OJ
Bars OK
Bars OL
Bars OM
Bars ON
Bars OO
Bars OP
Bars OQ
Bars OR
Bars OS
Bars OT
Bars OU
Bars OV
Bars OW
Bars OX
Bars OY
Bars OZ
Bars PA
Bars PB
Bars PC
Bars PD
Bars PE
Bars PF
Bars PG
Bars PH
Bars PI
Bars PJ
Bars PK
Bars PL
Bars PM
Bars PN
Bars PO
Bars PP
Bars PQ
Bars PR
Bars PS
Bars PT
Bars PU
Bars PV
Bars PW
Bars PX
Bars PY
Bars PZ
Bars QA
Bars QB
Bars QC
Bars QD
Bars QE
Bars QF
Bars QG
Bars QH
Bars QI
Bars QJ
Bars QK
Bars QL
Bars QM
Bars QN
Bars QO
Bars QP
Bars QQ
Bars QR
Bars QS
Bars QT
Bars QU
Bars QV
Bars QW
Bars QX
Bars QY
Bars QZ
Bars RA
Bars RB
Bars RC
Bars RD
Bars RE
Bars RF
Bars RG
Bars RH
Bars RI
Bars RJ
Bars RK
Bars RL
Bars RM
Bars RN
Bars RO
Bars RP
Bars RQ
Bars RR
Bars RS
Bars RT
Bars RU
Bars RV
Bars RW
Bars RX
Bars RY
Bars RZ
Bars SA
Bars SB
Bars SC
Bars SD
Bars SE
Bars SF
Bars SG
Bars SH
Bars SI
Bars SJ
Bars SK
Bars SL
Bars SM
Bars SN
Bars SO
Bars SP
Bars SQ
Bars SR
Bars SS
Bars ST
Bars SU
Bars SV
Bars SW
Bars SX
Bars SY
Bars SZ
Bars TA
Bars TB
Bars TC
Bars TD
Bars TE
Bars TF
Bars TG
Bars TH
Bars TI
Bars TJ
Bars TK
Bars TL
Bars TM
Bars TN
Bars TO
Bars TP
Bars TQ
Bars TR
Bars TS
Bars TT
Bars TU
Bars TV
Bars TW
Bars TX
Bars TY
Bars TZ
Bars UA
Bars UB
Bars UC
Bars UD
Bars UE
Bars UF
Bars UG
Bars UH
Bars UI
Bars UJ
Bars UK
Bars UL
Bars UM
Bars UN
Bars UO
Bars UP
Bars UQ
Bars UR
Bars US
Bars UT
Bars UU
Bars UV
Bars UW
Bars UX
Bars UY
Bars UZ
Bars VA
Bars VB
Bars VC
Bars VD
Bars VE
Bars VF
Bars VG
Bars VH
Bars VI
Bars VJ
Bars VK
Bars VL
Bars VM
Bars VN
Bars VO
Bars VP
Bars VQ
Bars VR
Bars VS
Bars VT
Bars VU
Bars VV
Bars VW
Bars VX
Bars VY
Bars VZ
Bars WA
Bars WB
Bars WC
Bars WD
Bars WE
Bars WF
Bars WG
Bars WH
Bars WI
Bars WJ
Bars WK
Bars WL
Bars WM
Bars WN
Bars WO
Bars WP
Bars WQ
Bars WR
Bars WS
Bars WT
Bars WU
Bars WV
Bars WW
Bars WX
Bars WY
Bars WZ
Bars XA
Bars XB
Bars XC
Bars XD
Bars XE
Bars XF
Bars XG
Bars XH
Bars XI
Bars XJ
Bars XK
Bars XL
Bars XM
Bars XN
Bars XO
Bars XP
Bars XQ
Bars XR
Bars XS
Bars XT
Bars XU
Bars XV
Bars XW
Bars XX
Bars XY
Bars XZ
Bars YA
Bars YB
Bars YC
Bars YD
Bars YE
Bars YF
Bars YG
Bars YH
Bars YI
Bars YJ
Bars YK
Bars YL
Bars YM
Bars YN
Bars YO
Bars YP
Bars YQ
Bars YR
Bars YS
Bars YT
Bars YU
Bars YV
Bars YW
Bars YX
Bars YY
Bars YZ
Bars ZA
Bars ZB
Bars ZC
Bars ZD
Bars ZE
Bars ZF
Bars ZG
Bars ZH
Bars ZI
Bars ZJ
Bars ZK
Bars ZL
Bars ZM
Bars ZN
Bars ZO
Bars ZP
Bars ZQ
Bars ZR
Bars ZS
Bars ZT
Bars ZU
Bars ZV
Bars ZW
Bars ZX
Bars ZY
Bars ZZ
#4 Bars C @ 12" Ctrs.
#4 Bars D @ 12" Ctrs.
#4 Bars E @ 12" Ctrs.
#4 Bars F @ 12" Ctrs.
#4 Bars G @ 12" Ctrs.
#4 Bars H @ 12" Ctrs.
#4 Bars I @ 12" Ctrs.
#4 Bars J @ 12" Ctrs.
#4 Bars K @ 12" Ctrs.
#4 Bars L @ 12" Ctrs.
#4 Bars M @ 12" Ctrs.
#4 Bars N @ 12" Ctrs.
#4 Bars O @ 12" Ctrs.
#4 Bars P @ 12" Ctrs.
#4 Bars Q @ 12" Ctrs.
#4 Bars R @ 12" Ctrs.
#4 Bars S @ 12" Ctrs.
#4 Bars T @ 12" Ctrs.
#4 Bars U @ 12" Ctrs.
#4 Bars V @ 12" Ctrs.
#4 Bars W @ 12" Ctrs.
#4 Bars X @ 12" Ctrs.
#4 Bars Y @ 12" Ctrs.
#4 Bars Z @ 12" Ctrs.
#4 Bars AA @ 12" Ctrs.
#4 Bars AB @ 12" Ctrs.
#4 Bars AC @ 12" Ctrs.
#4 Bars AD @ 12" Ctrs.
#4 Bars AE @ 12" Ctrs.
#4 Bars AF @ 12" Ctrs.
#4 Bars AG @ 12" Ctrs.
#4 Bars AH @ 12" Ctrs.
#4 Bars AI @ 12" Ctrs.
#4 Bars AJ @ 12" Ctrs.
#4 Bars AK @ 12" Ctrs.
#4 Bars AL @ 12" Ctrs.
#4 Bars AM @ 12" Ctrs.
#4 Bars AN @ 12" Ctrs.
#4 Bars AO @ 12" Ctrs.
#4 Bars AP @ 12" Ctrs.
#4 Bars AQ @ 12" Ctrs.
#4 Bars AR @ 12" Ctrs.
#4 Bars AS @ 12" Ctrs.
#4 Bars AT @ 12" Ctrs.
#4 Bars AU @ 12" Ctrs.
#4 Bars AV @ 12" Ctrs.
#4 Bars AW @ 12" Ctrs.
#4 Bars AX @ 12" Ctrs.
#4 Bars AY @ 12" Ctrs.
#4 Bars AZ @ 12" Ctrs.
#4 Bars BA @ 12" Ctrs.
#4 Bars BB @ 12" Ctrs.
#4 Bars BC @ 12" Ctrs.
#4 Bars BD @ 12" Ctrs.
#4 Bars BE @ 12" Ctrs.
#4 Bars BF @ 12" Ctrs.
#4 Bars BG @ 12" Ctrs.
#4 Bars BH @ 12" Ctrs.
#4 Bars BI @ 12" Ctrs.
#4 Bars BJ @ 12" Ctrs.
#4 Bars BK @ 12" Ctrs.
#4 Bars BL @ 12" Ctrs.
#4 Bars BM @ 12" Ctrs.
#4 Bars BN @ 12" Ctrs.
#4 Bars BO @ 12" Ctrs.
#4 Bars BP @ 12" Ctrs.
#4 Bars BQ @ 12" Ctrs.
#4 Bars BR @ 12" Ctrs.
#4 Bars BS @ 12" Ctrs.
#4 Bars BT @ 12" Ctrs.
#4 Bars BU @ 12" Ctrs.
#4 Bars BV @ 12" Ctrs.
#4 Bars BW @ 12" Ctrs.
#4 Bars BX @ 12" Ctrs.
#4 Bars BY @ 12" Ctrs.
#4 Bars BZ @ 12" Ctrs.
#4 Bars CA @ 12" Ctrs.
#4 Bars CB @ 12" Ctrs.
#4 Bars CC @ 12" Ctrs.
#4 Bars CD @ 12" Ctrs.
#4 Bars CE @ 12" Ctrs.
#4 Bars CF @ 12" Ctrs.
#4 Bars CG @ 12" Ctrs.
#4 Bars CH @ 12" Ctrs.
#4 Bars CI @ 12" Ctrs.
#4 Bars CJ @ 12" Ctrs.
#4 Bars CK @ 12" Ctrs.
#4 Bars CL @ 12" Ctrs.
#4 Bars CM @ 12" Ctrs.
#4 Bars CN @ 12" Ctrs.
#4 Bars CO @ 12" Ctrs.
#4 Bars CP @ 12" Ctrs.
#4 Bars CQ @ 12" Ctrs.
#4 Bars CR @ 12" Ctrs.
#4 Bars CS @ 12" Ctrs.
#4 Bars CT @ 12" Ctrs.
#4 Bars CU @ 12" Ctrs.
#4 Bars CV @ 12" Ctrs.
#4 Bars CW @ 12" Ctrs.
#4 Bars CX @ 12" Ctrs.
#4 Bars CY @ 12" Ctrs.
#4 Bars CZ @ 12" Ctrs.
#4 Bars DA @ 12" Ctrs.
#4 Bars DB @ 12" Ctrs.
#4 Bars DC @ 12" Ctrs.
#4 Bars DD @ 12" Ctrs.
#4 Bars DE @ 12" Ctrs.
#4 Bars DF @ 12" Ctrs.
#4 Bars DG @ 12" Ctrs.
#4 Bars DH @ 12" Ctrs.
#4 Bars DI @ 12" Ctrs.
#4 Bars DJ @ 12" Ctrs.
#4 Bars DK @ 12" Ctrs.
#4 Bars DL @ 12" Ctrs.
#4 Bars DM @ 12" Ctrs.
#4 Bars DN @ 12" Ctrs.
#4 Bars DO @ 12" Ctrs.
#4 Bars DP @ 12" Ctrs.
#4 Bars DQ @ 12" Ctrs.
#4 Bars DR @ 12" Ctrs.
#4 Bars DS @ 12" Ctrs.
#4 Bars DT @ 12" Ctrs.
#4 Bars DU @ 12" Ctrs.
#4 Bars DV @ 12" Ctrs.
#4 Bars DW @ 12" Ctrs.
#4 Bars DX @ 12" Ctrs.
#4 Bars DY @ 12" Ctrs.
#4 Bars DZ @ 12" Ctrs.
#4 Bars EA @ 12" Ctrs.
#4 Bars EB @ 12" Ctrs.
#4 Bars EC @ 12" Ctrs.
#4 Bars ED @ 12" Ctrs.
#4 Bars EE @ 12" Ctrs.
#4 Bars EF @ 12" Ctrs.
#4 Bars EG @ 12" Ctrs.
#4 Bars EH @ 12" Ctrs.
#4 Bars EI @ 12" Ctrs.
#4 Bars EJ @ 12" Ctrs.
#4 Bars EK @ 12" Ctrs.
#4 Bars EL @ 12" Ctrs.
#4 Bars EM @ 12" Ctrs.
#4 Bars EN @ 12" Ctrs.
#4 Bars EO @ 12" Ctrs.
#4 Bars EP @ 12" Ctrs.
#4 Bars EQ @ 12" Ctrs.
#4 Bars ER @ 12" Ctrs.
#4 Bars ES @ 12" Ctrs.
#4 Bars ET @ 12" Ctrs.
#4 Bars EU @ 12" Ctrs.
#4 Bars EV @ 12" Ctrs.
#4 Bars EW @ 12" Ctrs.
#4 Bars EX @ 12" Ctrs.
#4 Bars EY @ 12" Ctrs.
#4 Bars EZ @ 12" Ctrs.
#4 Bars FA @ 12" Ctrs.
#4 Bars FB @ 12" Ctrs.
#4 Bars FC @ 12" Ctrs.
#4 Bars FD @ 12" Ctrs.
#4 Bars FE @ 12" Ctrs.
#4 Bars FF @ 12" Ctrs.
#4 Bars FG @ 12" Ctrs.
#4 Bars FH @ 12" Ctrs.
#4 Bars FI @ 12" Ctrs.
#4 Bars FJ @ 12" Ctrs.
#4 Bars FK @ 12" Ctrs.
#4 Bars FL @ 12" Ctrs.
#4 Bars FM @ 12" Ctrs.
#4 Bars FN @ 12" Ctrs.
#4 Bars FO @ 12" Ctrs.
#4 Bars FP @ 12" Ctrs.
#4 Bars FQ @ 12" Ctrs.
#4 Bars FR @ 12" Ctrs.
#4 Bars FS @ 12" Ctrs.
#4 Bars FT @ 12" Ctrs.
#4 Bars FU @ 12" Ctrs.
#4 Bars FV @ 12" Ctrs.
#4 Bars FW @ 12" Ctrs.
#4 Bars FX @ 12" Ctrs.
#4 Bars FY @ 12" Ctrs.
#4 Bars FZ @ 12" Ctrs.
#4 Bars GA @ 12" Ctrs.
#4 Bars GB @ 12" Ctrs.
#4 Bars GC @ 12" Ctrs.
#4 Bars GD @ 12" Ctrs.
#4 Bars GE @ 12" Ctrs.
#4 Bars GF @ 12" Ctrs.
#4 Bars GG @ 12" Ctrs.
#4 Bars GH @ 12" Ctrs.
#4 Bars GI @ 12" Ctrs.
#4 Bars GJ @ 12" Ctrs.
#4 Bars GK @ 12" Ctrs.
#4 Bars GL @ 12" Ctrs.
#4 Bars GM @ 12" Ctrs.
#4 Bars GN @ 12" Ctrs.
#4 Bars GO @ 12" Ctrs.
#4 Bars GP @ 12" Ctrs.
#4 Bars GQ @ 12" Ctrs.
#4 Bars GR @ 12" Ctrs.
#4 Bars GS @ 12" Ctrs.
#4 Bars GT @ 12" Ctrs.
#4 Bars GU @ 12" Ctrs.
#4 Bars GV @ 12" Ctrs.
#4 Bars GW @ 12" Ctrs.
#4 Bars GX @ 12" Ctrs.
#4 Bars GY @ 12" Ctrs.
#4 Bars GZ @ 12" Ctrs.
#4 Bars HA @ 12" Ctrs.
#4 Bars HB @ 12" Ctrs.
#4 Bars HC @ 12" Ctrs.
#4 Bars HD @ 12" Ctrs.
#4 Bars HE @ 12" Ctrs.
#4 Bars HF @ 12" Ctrs.
#4 Bars HG @ 12" Ctrs.
#4 Bars HH @ 12" Ctrs.
#4 Bars HI @ 12" Ctrs.
#4 Bars HJ @ 12" Ctrs.
#4 Bars HK @ 12" Ctrs.
#4 Bars HL @ 12" Ctrs.
#4 Bars HM @ 12" Ctrs.
#4 Bars HN @ 12" Ctrs.
#4 Bars HO @ 12" Ctrs.
#4 Bars HP @ 12" Ctrs.
#4 Bars HQ @ 12" Ctrs.
#4 Bars HR @ 12" Ctrs.
#4 Bars HS @ 12" Ctrs.
#4 Bars HT @ 12" Ctrs.
#4 Bars HU @ 12" Ctrs.
#4 Bars HV @ 12" Ctrs.
#4 Bars HW @ 12" Ctrs.
#4 Bars HX @ 12" Ctrs.
#4 Bars HY @ 12" Ctrs.
#4 Bars HZ @ 12" Ctrs.
#4 Bars IA @ 12" Ctrs.
#4 Bars IB @ 12" Ctrs.
#4 Bars IC @ 12" Ctrs.
#4 Bars ID @ 12" Ctrs.
#4 Bars IE @ 12" Ctrs.
#4 Bars IF @ 12" Ctrs.
#4 Bars IG @ 12" Ctrs.
#4 Bars IH @ 12" Ctrs.
#4 Bars II @ 12" Ctrs.
#4 Bars IJ @ 12" Ctrs.
#4 Bars IK @ 12" Ctrs.
#4 Bars IL @ 12" Ctrs.
#4 Bars IM @ 12" Ctrs.
#4 Bars IN @ 12" Ctrs.
#4 Bars IO @ 12" Ctrs.
#4 Bars IP @ 12" Ctrs.
#4 Bars IQ @ 12" Ctrs.
#4 Bars IR @ 12" Ctrs.
#4 Bars IS @ 12" Ctrs.
#4 Bars IT @ 12" Ctrs.
#4 Bars IU @ 12" Ctrs.
#4 Bars IV @ 12" Ctrs.
#4 Bars IW @ 12" Ctrs.
#4 Bars IX @ 12" Ctrs.
#4 Bars IY @ 12" Ctrs.
#4 Bars IZ @ 12" Ctrs.
#4 Bars JA @ 12" Ctrs.
#4 Bars JB @ 12" Ctrs.
#4 Bars JC @ 12" Ctrs.
#4 Bars JD @ 12" Ctrs.
#4 Bars JE @ 12" Ctrs.
#4 Bars JF @ 12" Ctrs.
#4 Bars JG @ 12" Ctrs.
#4 Bars JH @ 12" Ctrs.
#4 Bars JI @ 12" Ctrs.
#4 Bars JJ @ 12" Ctrs.
#4 Bars JK @ 12" Ctrs.
#4 Bars JL @ 12" Ctrs.
#4 Bars JM @ 12" Ctrs.
#4 Bars JN @ 12" Ctrs.
#4 Bars JO @ 12" Ctrs.
#4 Bars JP @ 12" Ctrs.
#4 Bars JQ @ 12" Ctrs.
#4 Bars JR @ 12" Ctrs.
#4 Bars JS @ 12" Ctrs.
#4 Bars JT @ 12" Ctrs.
#4 Bars JU @ 12" Ctrs.
#4 Bars JV @ 12" Ctrs.
#4 Bars JW @ 12" Ctrs.
#4 Bars JX @ 12" Ctrs.
#4 Bars JY @ 12" Ctrs.
#4 Bars JZ @ 12" Ctrs.
#4 Bars KA @ 12" Ctrs.
#4 Bars KB @ 12" Ctrs.
#4 Bars KC @ 12" Ctrs.
#4 Bars KD @ 12" Ctrs.
#4 Bars KE @ 12" Ctrs.
#4 Bars KF @ 12" Ctrs.
#4 Bars KG @ 12" Ctrs.
#4 Bars KH @ 12" Ctrs.
#4 Bars KI @ 12" Ctrs.
#4 Bars KJ @ 12" Ctrs.
#4 Bars KK @ 12" Ctrs.
#4 Bars KL @ 12" Ctrs.
#4 Bars KM @ 12" Ctrs.
#4 Bars KN @ 12" Ctrs.
#4 Bars KO @ 12" Ctrs.
#4 Bars KP @ 12" Ctrs.
#4 Bars KQ @ 12" Ctrs.
#4 Bars KR @ 12" Ctrs.
#4 Bars KS @ 12" Ctrs.
#4 Bars KT @ 12" Ctrs.
#4 Bars KU @ 12" Ctrs.
#4 Bars KV @ 12" Ctrs.
#4 Bars KW @ 12" Ctrs.
#4 Bars KX @ 12" Ctrs.
#4 Bars KY @ 12" Ctrs.
#4 Bars KZ @ 12" Ctrs.
#4 Bars LA @ 12" Ctrs.
#4 Bars LB @ 12" Ctrs.
#4 Bars LC @ 12" Ctrs.
#4 Bars LD @ 12" Ctrs.
#4 Bars LE @ 12" Ctrs.
#4 Bars LF @ 12" Ctrs.
#4 Bars LG @ 12" Ctrs.
#4 Bars LH @ 12" Ctrs.
#4 Bars LI @ 12" Ctrs.
#4 Bars LJ @ 12" Ctrs.
#4 Bars LK @ 12" Ctrs.
#4 Bars LL @ 12" Ctrs.
#4 Bars LM @ 12" Ctrs.
#4 Bars LN @ 12" Ctrs.
#4 Bars LO @ 12" Ctrs.
#4 Bars LP @ 12" Ctrs.
#4 Bars LQ @ 12" Ctrs.
#4 Bars LR @ 12" Ctrs.
#4 Bars LS @ 12" Ctrs.
#4 Bars LT @ 12" Ctrs.
#4 Bars LU @ 12" Ctrs.
#4 Bars LV @ 12" Ctrs.
#4 Bars LW @ 12" Ctrs.
#4 Bars LX @ 12" Ctrs.
#4 Bars LY @ 12" Ctrs.
#4 Bars LZ @ 12" Ctrs.
#4 Bars MA @ 12" Ctrs.
#4 Bars MB @ 12" Ctrs.
#4 Bars MC @ 12" Ctrs.
#4 Bars MD @ 12" Ctrs.
#4 Bars ME @ 12" Ctrs.
#4 Bars MF @ 12" Ctrs.
#4 Bars MG @ 12" Ctrs.
#4 Bars MH @ 12" Ctrs.
#4 Bars MI @ 12" Ctrs.
#4 Bars MJ @ 12" Ctrs.
#4 Bars MK @ 12" Ctrs.
#4 Bars ML @ 12" Ctrs.
#4 Bars MM @ 12" Ctrs.
#4 Bars MN @ 12" Ctrs.
#4 Bars MO @ 12" Ctrs.
#4 Bars MP @ 12" Ctrs.
#4 Bars MQ @ 12" Ctrs.
#4 Bars MR @ 12" Ctrs.
#4 Bars MS @ 12" Ctrs.
#4 Bars MT @ 12" Ctrs.
#4 Bars MU @ 12" Ctrs.
#4 Bars MV @ 12" Ctrs.
#4 Bars MW @ 12" Ctrs.
#4 Bars MX @ 12" Ctrs.
#4 Bars MY @ 12" Ctrs.
#4 Bars MZ @ 12" Ctrs.
#4 Bars NA @ 12" Ctrs.
#4 Bars NB @ 12" Ctrs.
#4 Bars NC @ 12" Ctrs.
#4 Bars ND @ 12" Ctrs.
#4 Bars NE @ 12" Ctrs.
#4 Bars NF @ 12" Ctrs.
#4 Bars NG @ 12" Ctrs.
#4 Bars NH @ 12" Ctrs.
#4 Bars NI @ 12" Ctrs.
#4 Bars NJ @ 12" Ctrs.
#4 Bars NK @ 12" Ctrs.
#4 Bars NL @ 12" Ctrs.
#4 Bars NM @ 12" Ctrs.
#4 Bars NN @ 12" Ctrs.
#4 Bars NO @ 12" Ctrs.
#4 Bars NP @ 12" Ctrs.
#4 Bars NQ @ 12" Ctrs.
#4 Bars NR @ 12" Ctrs.
#4 Bars NS @ 12" Ctrs.
#4 Bars NT @ 12" Ctrs.
#4 Bars NU @ 12" Ctrs.
#4 Bars NV @ 12" Ctrs.
#4 Bars NW @ 12" Ctrs.
#4 Bars NX @ 12" Ctrs.
#4 Bars NY @ 12" Ctrs.
#4 Bars NZ @ 12" Ctrs.
#4 Bars OA @ 12" Ctrs.
#4 Bars OB @ 12" Ctrs.
#4 Bars OC @ 12" Ctrs.
#4 Bars OD @ 12" Ctrs.
#4 Bars OE @ 12" Ctrs.
#4 Bars OF @ 12" Ctrs.
#4 Bars OG @ 12" Ctrs.
#4 Bars OH @ 12" Ctrs.
#4 Bars OI @ 12" Ctrs.
#4 Bars OJ @ 12" Ctrs.
#4 Bars OK @ 12" Ctrs.
#4 Bars OL @ 12" Ctrs.
#4 Bars OM @ 12" Ctrs.
#4 Bars ON @ 12" Ctrs.
#4 Bars OO @ 12" Ctrs.
#4 Bars OP @ 12" Ctrs.
#4 Bars OQ @ 12" Ctrs.
#4 Bars OR @ 12" Ctrs.
#4 Bars OS @ 12" Ctrs.
#4 Bars OT @ 12" Ctrs.
#4 Bars OU @ 12" Ctrs.
#4 Bars OV @ 12" Ctrs.
#4 Bars OW @ 12" Ctrs.
#4 Bars OX @ 12" Ctrs.
#4 Bars OY @ 12" Ctrs.
#4 Bars OZ @ 12" Ctrs.
#4 Bars PA @ 12" Ctrs.
#4 Bars PB @ 12" Ctrs.
#4 Bars PC @ 12" Ctrs.
#4 Bars PD @ 12" Ctrs.
#4 Bars PE @ 12" Ctrs.
#4 Bars PF @ 12" Ctrs.
#4 Bars PG @ 12" Ctrs.
#4 Bars PH @ 12" Ctrs.
#4 Bars PI @ 12" Ctrs.
#4 Bars PJ @ 12" Ctrs.
#4 Bars PK @ 12" Ctrs.
#4 Bars PL @ 12" Ctrs.
#4 Bars PM @ 12" Ctrs.
#4 Bars PN @ 12" Ctrs.
#4 Bars PO @ 12" Ctrs.
#4 Bars PP @ 12" Ctrs.
#4 Bars PQ @ 12" Ctrs.
#4 Bars PR @ 12" Ctrs.
#4 Bars PS @ 12" Ctrs.
#4 Bars PT @ 12" Ctrs.
#4 Bars PU @ 12" Ctrs.
#4 Bars PV @ 12" Ctrs.
#4 Bars PW @ 12" Ctrs.
#4 Bars PX @ 12" Ctrs.
#4 Bars PY @ 12" Ctrs.
#4 Bars PZ @ 12" Ctrs.
#4 Bars QA @ 12" Ctrs.
#4 Bars QB @ 12" Ctrs.
#4 Bars QC @ 12" Ctrs.
#4 Bars QD @ 12" Ctrs.
#4 Bars QE @ 12" Ctrs.
#4 Bars QF @ 12" Ctrs.
#4 Bars QG @ 12" Ctrs.
#4 Bars QH @ 12" Ctrs.
#4 Bars QI @ 12" Ctrs.
#4 Bars QJ @ 12" Ctrs.
#4 Bars QK @ 12" Ctrs.
#4 Bars QL @ 12" Ctrs.
#4 Bars QM @ 12" Ctrs.
#4 Bars QN @ 12" Ctrs.
#4 Bars QO @ 12" Ctrs.
#4 Bars QP @ 12" Ctrs.
#4 Bars QQ @ 12" Ctrs.
#4 Bars QR @ 12" Ctrs.
#4 Bars QS @ 12" Ctrs.
#4 Bars QT @ 12" Ctrs.
#4 Bars QU @ 12" Ctrs.
#4 Bars QV @ 12" Ctrs.
#4 Bars QW @ 12" Ctrs.
#4 Bars QX @ 12" Ctrs.
#4 Bars QY @ 12" Ctrs.
#4 Bars QZ @ 12" Ctrs.
#4 Bars RA @ 12" Ctrs.
#4 Bars RB @ 12" Ctrs.
#4 Bars RC @ 12" Ctrs.
#4 Bars RD @ 12" Ctrs.
#4 Bars RE @ 12" Ctrs.
#4 Bars RF @ 12" Ctrs.
#4 Bars RG @ 12" Ctrs.
#4 Bars RH @ 12" Ctrs.
#4 Bars RI @ 12" Ctrs.
#4 Bars RJ @ 12" Ctrs.
#4 Bars RK @ 12" Ctrs.
#4 Bars RL @ 12" Ctrs.
#4 Bars RM @ 12" Ctrs.
#4 Bars RN @ 12" Ctrs.
#4 Bars RO @ 12" Ctrs.
#4 Bars RP @ 12" Ctrs.
#4 Bars RQ @ 12" Ctrs.
#4 Bars RR @ 12" Ctrs.
#4 Bars RS @ 12" Ctrs.
#4 Bars RT @ 12" Ctrs.
#4 Bars RU @ 12" Ctrs.
#4 Bars RV @ 12" Ctrs.
#4 Bars RW @ 12" Ctrs.
#4 Bars RX @ 12" Ctrs.
#4 Bars RY @ 12" Ctrs.
#4 Bars RZ @ 12" Ctrs.
#4 Bars SA @ 12" Ctrs.
#4 Bars SB @ 12" Ctrs.
#4 Bars SC @ 12" Ctrs.
#4 Bars SD @ 12" Ctrs.
#4 Bars SE @ 12" Ctrs.
#4 Bars SF @ 12" Ctrs.
#4 Bars SG @ 12" Ctrs.
#4 Bars SH @ 12" Ctrs.
#4 Bars SI @ 12" Ctrs.
#4 Bars SJ @ 12" Ctrs.
#4 Bars SK @ 12" Ctrs.
#4 Bars SL @ 12" Ctrs.
#4 Bars SM @ 12" Ctrs.
#4 Bars SN @ 12" Ctrs.
#4 Bars SO @ 12" Ctrs.
#4 Bars SP @ 12" Ctrs.
#4 Bars SQ @ 12" Ctrs.
#4 Bars SR @ 12" Ctrs.
#4 Bars SS @ 12" Ctrs.
#4 Bars ST @ 12" Ctrs.
#4 Bars SU @ 12" Ctrs.
#4 Bars SV @ 12" Ctrs.
#4 Bars SW @ 12" Ctrs.
#4 Bars SX @ 12" Ctrs.
#4 Bars SY @ 12" Ctrs.
#4 Bars SZ @ 12" Ctrs.
#4 Bars TA @ 12" Ctrs.
#4 Bars TB @ 12" Ctrs.
#4 Bars TC @ 12" Ctrs.
#4 Bars TD @ 12" Ctrs.
#4 Bars TE @ 12" Ctrs.
#4 Bars TF @ 12" Ctrs.
#4 Bars TG @ 12" Ctrs.
#4 Bars TH @ 12" Ctrs.
#4 Bars TI @ 12" Ctrs.
#4 Bars TJ @ 12" Ctrs.
#4 Bars TK @ 12" Ctrs.
#4 Bars TL @ 12" Ctrs.
#4 Bars TM @ 12" Ctrs.
#4 Bars TN @ 12" Ctrs.
#4 Bars TO @ 12" Ctrs.
#4 Bars TP @ 12" Ctrs.
#4 Bars TQ @ 12" Ctrs.
#4 Bars TR @ 12" Ctrs.
#4 Bars TS @ 12" Ctrs.
#4 Bars TT @ 12" Ctrs.
#4 Bars TU @ 12" Ctrs.
#4 Bars TV @ 12" Ctrs.
#4 Bars TW @ 12" Ctrs.
#4 Bars TX @ 12" Ctrs.
#4 Bars TY @ 12" Ctrs.
#4 Bars TZ @ 12" Ctrs.
#4 Bars UA @ 12" Ctrs.
#4 Bars UB @ 12" Ctrs.
#4 Bars UC @ 12" Ctrs.
#4 Bars UD @ 12" Ctrs.
#4 Bars UE @ 12" Ctrs.
#4 Bars UF @ 12" Ctrs.
#4 Bars UG @ 12" Ctrs.
#4 Bars UH @ 12" Ctrs.
#4 Bars UI @ 12" Ctrs.
#4 Bars UJ @ 12" Ctrs.
#4 Bars UK @ 12" Ctrs.
#4 Bars UL @ 12" Ctrs.
#4 Bars UM @ 12" Ctrs.
#4 Bars UN @ 12" Ctrs.
#4 Bars UO @ 12" Ctrs.
#4 Bars UP @ 12" Ctrs.
#4 Bars UQ @ 12" Ctrs.
#4 Bars UR @ 12" Ctrs.
#4 Bars US @ 12" Ctrs.
#4 Bars UT @ 12" Ctrs.
#4 Bars UU @ 12" Ctrs.
#4 Bars UV @ 12" Ctrs.
#4 Bars UW @ 12" Ctrs.
#4 Bars UX @ 12" Ctrs.
#4 Bars UY @ 12" Ctrs.
#4 Bars UZ @ 12" Ctrs.
#4 Bars VA @ 12" Ctrs.
#4 Bars VB @ 12" Ctrs.
#4 Bars VC @ 12" Ctrs.
#4 Bars VD @ 12" Ctrs.
#4 Bars VE @ 12" Ctrs.
#4 Bars VF @ 12" Ctrs.
#4 Bars VG @ 12" Ctrs.
#4 Bars VH @ 12"

10/18/2018 15:25

IP_PWP:dms09544\CCSM4-6S75_1.dgn

F.A.P.	STATE PROJECT	PARISH	SHEET NO.

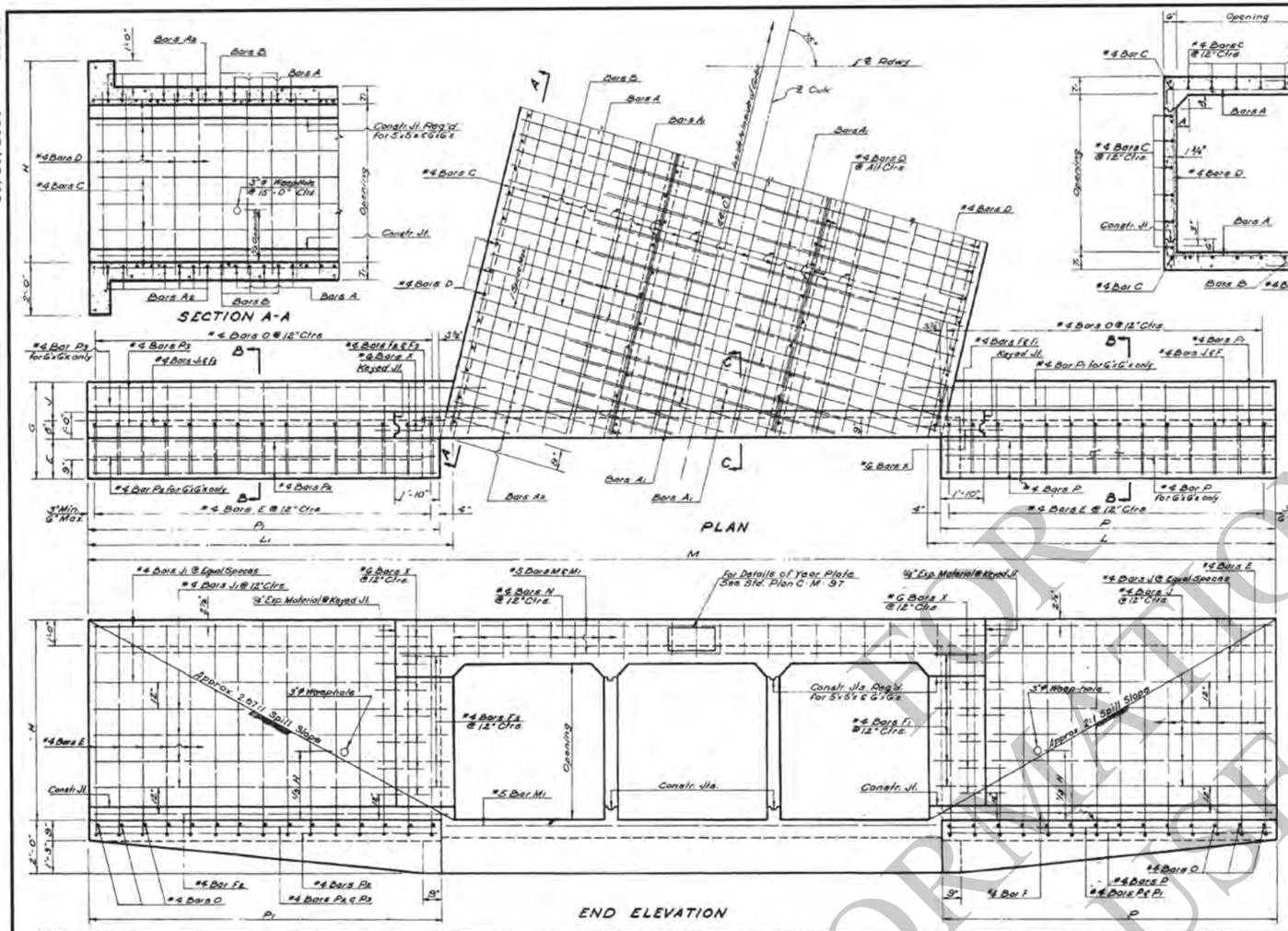

DIMENSIONS FOR BARS B						
SIZE	PIN DIAM.	A	B	C	D	E
#4 & #5	5⅜"	5'-2⅝"	2'-2⅝"	1'-0⅝"	3⅜"	4½"
#5 & #6	5⅞"	5'-11½"	2'-8⅛"	2'-2⅝"	5⅜"	5½"
G1 & G5	6⅜"	6'-7⅞"	3'-1¾"	2'-7¾"	4¾"	6"

DIMENSIONS

OPENINGS SIZE FEET	OPENINGS NO.	OPENINGS AREA SQ. FT.	MAX. FILL SLAB FEET	MAX. FILL WALL FEET	BARREL T1 IN.	BARREL A IN.	BARREL Y IN.	WINGS AND CURB E FT-IN.	J FT-IN.	G FT-IN.	H FT-IN.	L FT-IN.	L1 FT-IN.	P FT-IN.	P1 FT-IN.	M FT.-IN.
4x4	2	32	25	13	7	4	1⅛	1'-5	0'-10	2'-9	5'-7	10'-1½	10'-4½	9'-7	9'-10	19'-6⅛
	3	48														33'-10⅝
	4	64														38'-6⅛
	5	80														43'-2⅝
	6	96														47'-10⅝
5x5	2	50	21	7	7½	5	1⅛	1'-5	1'-2	3'-3	6'-7½	12'-2⅝	13'-1⅝	11'-8	12'-7	36'-1⅞
	3	75														41'-10⅜
	4	100														47'-6⅝
	5	125														53'-2⅞
	6	150														58'-11⅛
G1G	2	72	15	8	8	6	1⅜	1'-7	1'-6	3'-9	7'-8	14'-4⅞	15'-1⅜	13'-10	14'-7	42'-4 7/16
	3	108														49'-1 7/16
	4	144	20	5	8	6	1⅜									55'-10 7/16
	5	180														62'-6 7/16
	6	216														69'-3 7/16

QUANTITIES

OPENINGS SIZE FEET	OPENINGS NO.	PER LIN. FT OF BARREL STEEL LBS.	PER LIN. FT OF BARREL CONC. CU.YDS.	44'-0" CULVERT (ALONG ℄) STEEL LBS.	44'-0" CULVERT (ALONG ℄) CONC. CU.YDS.	OPENINGS NO.	OPENINGS SIZE FEET
4x4	2	88.96	0.6409	4,755	40.73	2	4x4
	3	128.46	0.9136	6,853	54.01	3	
	4	170.96	1.1862	8,917	67.28	4	
	5	213.46	1.4559	10,979	80.55	5	
	6	255.96	1.7315	13,145	93.82	6	
5x5	2	114.35	0.8231	6,340	53.71	2	5x5
	3	171.39	1.1767	9,135	70.67	3	
	4	228.43	1.5303	11,901	88.02	4	
	5	285.48	1.8840	14,777	105.16	5	
	6	342.52	2.2377	17,547	122.31	6	
G1G	2	138.68	1.0165	7866	67.63	2	G1G
	3	207.75	1.4599	11264	88.96	3	
	4	276.82	1.9012	14712	110'28	4	
	5	346.09	2.3426	18158	131.62	5	
	6	415.26	2.7833	21720	152.96	6	

BILL OF REINFORCING STEEL FOR 44'-0" CULVERT

BARREL REINFORCEMENT

OPENINGS SIZE FEET	NO.	BARS A SIZE	BARS A NO	BARS A LGTH FT-IN	BARS A SPAC IN.	BARS A1 SIZE	BARS A1 NO	BARS A1 LGTH FT-IN	BARS A1 SPAC IN.	BARS A2 SIZE	BARS A2 NO	BARS A2 SHORT BAR FT-IN	BARS A2 VAR IN.	BARS A2 LONG BAR FT-IN	BARS A2 SPAC IN.	BARS B SIZE	BARS B NO	BARS B LGTH FT-IN	BARS B SPAC IN.	#4 BARS D NO	#4 BARS D LGTH FT-IN	#4 BARS C NO	#4 BARS C LGTH FT-IN
4x4	2	#5	86	10-2	12	#5	90	3-10	6 12	#5	16	3-0	22 3333	8-7	6	#5	85	10-8½	12	138	4-10	12	38	47-2
	3	#5	64	16-8	12	#5	192	3-10	6 12	#5	28	3-0	22 3333	14-2	6	#5	84	15-11½	12	186	4-10	12	56	47-2
	4	#5	82	19-2	12	#5	294	3-10	6 12	#5	36	3-0	22 3750	17-11	6	#5	82	19-10⅝	12	230	4-10	12	74	47-2
	5	#5	80	23-8	12	#5	396	3-10	6 12	#5	44	3-0	22 4000	21-6	6	#5	80	24-7	12	276	4-10	12	92	47-2
	6	#5	76	28-2	12	#5	512	3-10	6 12	#5	56	3-0	22 3846	27-3	6	#5	78	29-3⅜	12	322	4-10	12	110	47-2
5x5	2	#5	102	12-2	10	#5	110	4-4	5 10	#5	20	3-0	18 6000	10-9	5	#5	104	12-5⅝	10	138	5-11	12	45	47-2
	3	#5	98	17-8	10	#5	252	4-4	5 10	#5	40	3-0	18 6667	17-0	5	#5	100	18-2½	10	184	5-11	12	66	47-2
	4	#5	96	23-2	10	#5	336	4-4	5 10	#5	52	3-0	18 6667	21-8	5	#5	96	23-11⅜	10	230	5-11	12	87	47-2
	5	#5	92	28-8	10	#5	496	4-4	5 10	#5	68	3-0	18 6976	27-11	5	#5	92	29-9	10	276	5-11	12	108	47-2
	6	#5	88	34-2	10	#5	629	4-4	5 10	#5	80	3-0	18 6842	32-7	5	#5	90	33-6⅝	10	322	5-11	12	129	47-2
G4G	2	#6	74	14-2	14	#6	82	5-2	7½ 14	#6	20	3-0	26 2500	11-8	7	#6	74	14-5⅞	14	166	7-0	10	52	47-2
	3	#6	70	20-8	14	#6	168	5-2	7½ 14	#6	32	3-0	26 1429	18-3	7	#6	72	21-3	14	224	7-0	10	76	47-2
	4	#6	68	27-2	14	#6	254	5-2	7½ 14	#6	44	3-0	26 1000	24-9	7	#6	68	28-0½	14	280	7-0	10	100	47-2
	5	#6	64	33-8	14	#6	360	5-2	7½ 14	#6	56	3-0	26 1538	31-4	7	#6	66	34-10	14	336	7-0	10	124	47-2
	6	#6	62	40-2	14	#6	470	5-2	7½ 14	#6	68	3-0	26 1250	37-10	7	#6	62	41-1⅞	14	392	7-0	10	148	47-2

WINGS AND CURBS REINFORCEMENT

OPENINGS SIZE FEET	NO.	#4 BARS E NO	#4 BARS E LGTH FT-IN	#4 BARS F NO	#4 BARS F LGTH FT-IN	#4 BARS F1 NO	#4 BARS F1 LGTH FT-IN	#4 BARS F2 NO	#4 BARS F2 LGTH FT-IN	#4 BARS F3 NO	#4 BARS F3 LGTH FT-IN	#4 BARS J NO	#4 BARS J LGTH FT-IN	#4 BARS J1 NO	#4 BARS J1 LGTH FT-IN	#4 BARS O NO	#4 BARS O LGTH FT-IN	#4 BARS P NO	#4 BARS P LGTH FT-IN	#4 BARS P1 NO	#4 BARS P1 LGTH FT-IN	#4 BARS P2 NO	#4 BARS P2 LGTH FT-IN	#4 BARS P3 NO	#4 BARS P3 LGTH FT-IN	#4 BARS N NO	#4 BARS N LGTH FT-IN	#5 BARS M NO	#5 BARS M LGTH FT-IN	#5 BARS M1 NO	#5 BARS M1 LGTH FT-IN	#6 BARS X NO	#6 BARS X LGTH FT-IN
4x4	2	40	7-5	2	12-11	10	3-0	2	14-1½	10	3-3	12	9-6	12	10-5	50	2-10	6	11-4	4	12-11	6	12-3	4	14-4	20	4-3	4	12-11	6	5-5	20	2-0
	3																									30	4-3	4	17-7	6	14-1	20	2-0
	4																									38	4-3	4	22-3	6	18-9	20	2-0
	5																									48	4-3	4	26-11	6	23-5	20	2-0
	6																									58	4-3	4	31-7	6	28-1	20	2-0
5x5	2	50	8-7½	2	12-11	10	3-0	2	14-1½	10	3-3	12	9-6	12	10-5	50	2-10	6	11-4	4	12-11	6	12-3	4	14-4	24	4-4	4	15-0	6	11-6	24	2-0
	3																									36	4-4	4	20-8	6	17-3	24	2-0
	4																									48	4-4	4	26-5	6	22-11	24	2-0
	5																									58	4-4	4	32-1	6	28-7	24	2-0
	6																									70	4-4	4	37-9	6	34-4	24	2-0
G4G	2	58	9-10	2	15-1	12	3-0	2	16-1½	12	3-3	14	11-8	14	12-5	58	3-4	8	13-6	6	16-1	8	14-3	6	16-5	28	4-5	4	17-1	6	13-7	28	2-0
	3																									42	4-5	4	23-10	6	20-4	28	2-0
	4																									56	4-5	4	30-6	6	27-1	28	2-0
	5																									68	4-5	4	37-3	6	33-9	28	2-0
	6																									82	4-5	4	45-10	6	42-4	28	2-0

① Includes 1'-6" Lap Splice
② Includes 1'-10" Lap Splice

(A) 6 Bars X To be ¾" ℄ Smooth and Greased for 1'-0" of Length

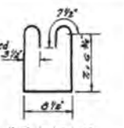

GENERAL NOTES:

Construction Specifications: Latest Approved La. Dept. of Highways Standard Specifications
Design Specifications: A.A.S.H.O. 1961 as amended by Int. Spec. 1964
Live Load: HS 20-44, or Military Loading, whichever is greater.
All Concrete to be Class "A"
All exposed Corners to have ¾" Chamfer, unless otherwise noted.
Reinforcement Shall be Billet-Steel A.S.T.M. A615 or Rail-Steel A.S.T.M. A616 or Axle-Steel A.S.T.M. A 617.
Dimensions relating to Reinforcing Steel are to bar Centers.
A 1½" Square of Plastic Filter Cloth (See Qualified Products List) shall be placed in contact with Concrete behind each Weep Hole. In addition, to apron, & Cliff, of Concrete Bands.
For Detail of Joints, See Std. Plan C.M.-68.

5-30-78	Revised Spill Slope	W.J.J.
3-5-75	New General Notes & Steel	W.E.R.
12-1-69	Added Note "STEEL"	W.E.R.
DATE	DESCRIPTION	BY

8/22/2017 09:04

IP_PWP:dms09544\CCSM4-6590_1.dgn

F.A.P.	STATE PROJECT	PARISH	SHEET NO.

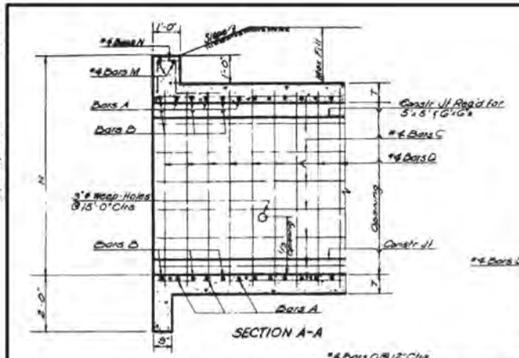

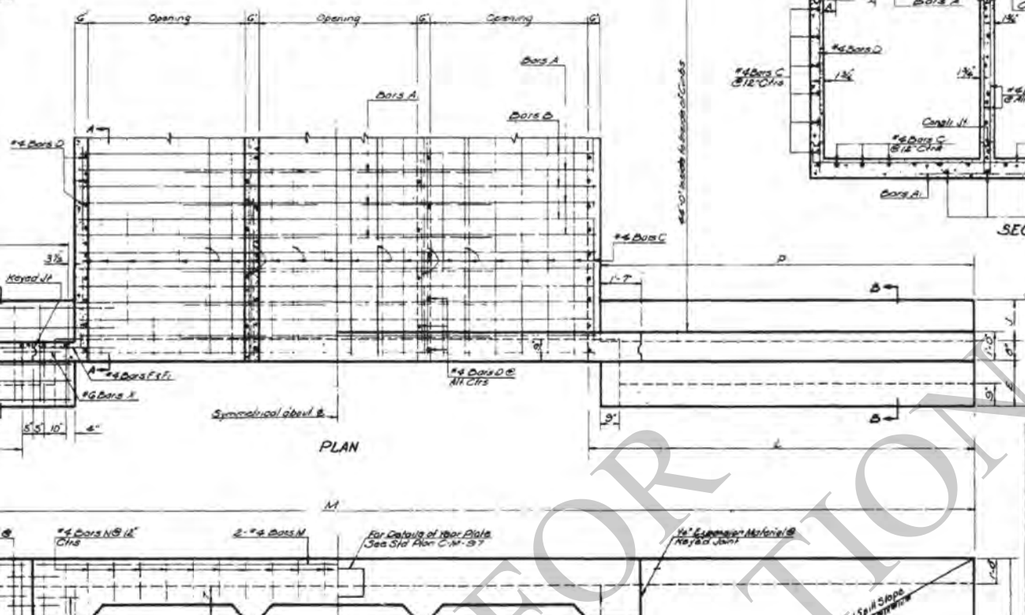

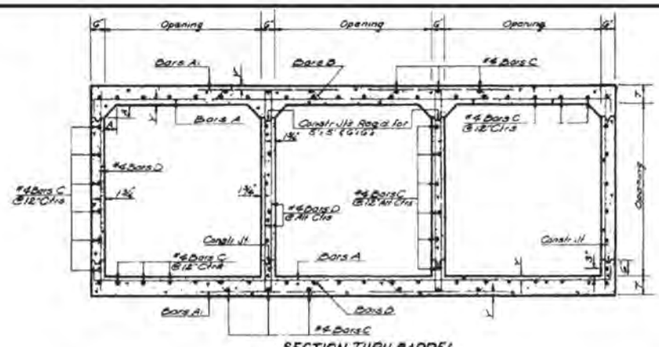

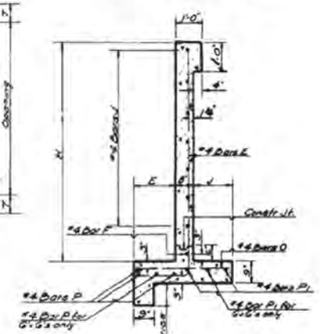

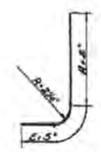

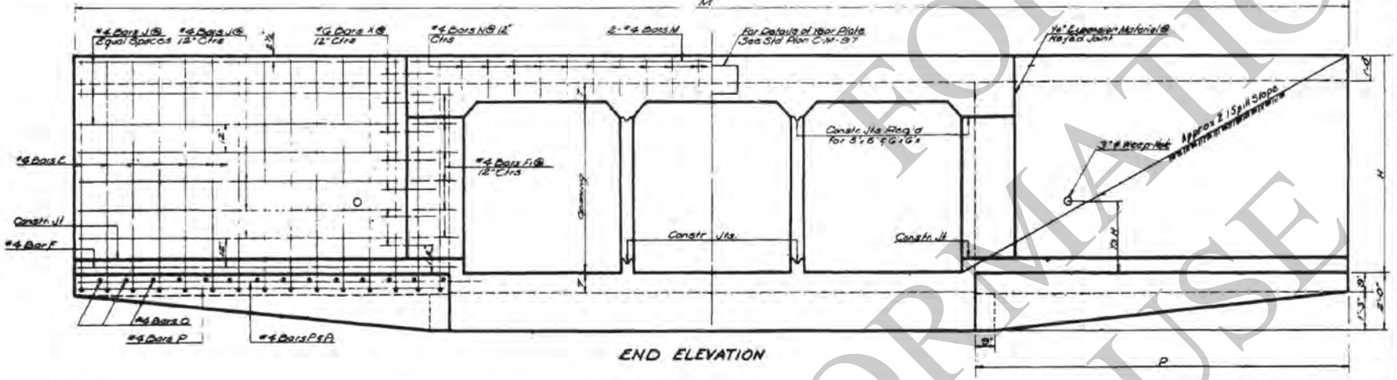

DIMENSIONS																QUANTITIES				OPENINGS	
OPENINGS			MAX FILL		BARREL			WINGS & CURBS								PER LINEAL FT OF BARREL		FOR 0'-0" OF CHANNEL			
SIZE	NO	AREA	SLAB	WALL	T	A	Y	E	J	G	H	L	P	M		STEEL	CONCRETE	STEEL	CONCRETE	NO	SIZE
FEET		SQ FT	FEET	FEET	IN	IN	IN	FT-IN	FT-IN	FT-IN	FT-IN	FT-IN	FT-IN	FT-IN		LBS.	CU. YDS.	LBS	CU. YDS.		FEET
4x4	2	32	25												28'-0	85.26	0.8609	4660	40.18	2	4'x4'
	3	48													32'-6	127.77	0.9139	6654	53.41	3	
	4	64	32	13	7	4	1 13/16	1'-3	0'-10	2'-8	3'-7	3'-9	3'-3		37'-0	170.27	1.1662	8867	66.64	4	
	5	80													41'-6	212.77	1.4569	10873	79.87	5	
	6	96													46'-0	255.27	1.7315	12856	93.10	6	
5x5	2	50	21												34'-0	113.52	0.8231	6,169	52.60	2	5'x5'
	3	75													39'-6	170.56	1.1767	8,850	69.69	3	
	4	100	27	7	7½	5	1 15/16	1'-5	1'-2	3'-3	3'-7½	3'-9	3'-3		45'-0	227.60	1.5303	11,537	86.79	4	
	5	125													50'-6	284.64	1.8840	14,218	103.89	5	
	6	150													56'-0	341.68	2.2377	16,905	120.98	6	
6x6	2	72	15												42'-0	137.72	1.0185	7,704	67.54	2	6'x6'
	3	108													48'-6	206.89	1.4589	10,957	88.81	3	
	4	144	20	5	8	6	1¾	1'-7	1'-6	3'-9	3'-8	4'-2	4'-3		55'-0	276.06	1.8612	14,216	110.08	4	
	5	180													61'-6	345.23	2.3426	17,469	131.34	5	
	6	216													68'-0	414.40	2.7839	20,733	152.61	6	

BILL OF REINFORCING STEEL FOR 44'-0" CULVERT

OPENINGS		BARREL REINFORCEMENT																WING AND CURB REINFORCEMENT																				OPENINGS	
		BARS A				BARS A'				BARS B				*4 BARS C		*4 BARS D		*4 BARS E		*4 BARS F		*4 BARS F'		*4 BARS J		*4 BARS M		*4 BARS N		*4 BARS O		*4 BARS P		*4 BARS P'		*4 BARS X			
SIZE	NO.	SIZE	NO.	LENGTH	SPAC.	SIZE	NO	LENGTH	SPAC.	SIZE	NO	LENGTH	SPAC	NO	@ LENGTH	NO.	LENGTH	NO.	LENGTH	NO.	LENGTH	NO.	LENGTH	NO.	LENGTH	NO.	LENGTH	NO.	LENGTH	NO.	LENGTH	NO.	LENGTH	NO.	LENGTH	NO.	LENGTH	NO	SIZE
FEET				FT-IN.	IN.			FT-IN.	IN			FT-IN.	IN		FT-IN		FT-IN.		FT-IN.		FT-IN.		FT-IN.		FT-IN.		FT-IN.		FT-IN.		FT-IN.		FT-IN.		FT-IN.		FEET
4x4	2	*5	82	10'-0	12	*5	92	3'-10	12	*5	92	10'-2½	12	36	47'-2	138	4'-10	12	40	7'-5	4	10'-8	16	2'-11	20	3'-4	4	12'-1	20	4'-8	36	2'-4	12	8'-11	8	10'-7	20	2'-0	2	4x4
	3	*5	82	16'-6	12	*5	184	3'-10	12	*5	92	16'-1½	12	50	47'-2	184	4'-10	12	40	7'-5	4	10'-8	16	2'-11	20	3'-6	4	16'-7	28	4'-8	36	2'-4	12	8'-11	8	10'-7	20	2'-0	3	
	4	*5	82	13'-0	12	*5	276	3'-10	12	*5	92	13'-8½	12	74	47'-2	230	4'-10	12	40	7'-5	4	10'-8	16	2'-11	20	3'-8	4	21'-1	38	4'-9	36	2'-4	12	8'-11	8	10'-7	20	2'-0	4	
	5	*5	82	23'-6	12	*5	368	3'-10	12	*5	92	24'-5	12	92	47'-2	276	4'-10	12	40	7'-5	4	10'-8	16	2'-11	20	3'-8	4	25'-7	46	4'-9	36	2'-4	12	8'-11	8	10'-7	20	2'-0	5	
	6	*5	82	28'-0	12	*5	460	3'-10	12	*5	92	29'-1½	12	110	47'-2	322	4'-10	12	40	7'-5	4	10'-8	16	2'-11	20	3'-8	4	30'-1	55	4'-9	36	2'-4	12	8'-11	8	10'-7	20	2'-0	6	
5x5	2	*5	110	12'-0	10	*5	110	4'-6	10	*5	110	12'-3½	10	45	47'-2	138	5'-11	12	48	8'-7½	4	12'-8	20	2'-11	24	3'-9	4	14'-1	24	4'-10	44	2'-10	12	10'-11	8	12'-7	24	2'-0	2	5x5
	3	*5	110	17'-6	10	*5	220	4'-6	10	*5	110	18'-0½	10	66	47'-2	184	5'-11	12	48	8'-7½	4	12'-8	20	2'-11	24	3'-9	4	19'-7	34	4'-10	44	2'-10	12	10'-11	8	12'-7	24	2'-0	3	
	4	*5	110	23'-0	10	*5	330	4'-6	10	*5	110	23'-9½	10	87	47'-2	230	5'-11	12	48	8'-7½	4	12'-8	20	2'-11	24	3'-9	4	25'-1	46	4'-10	44	2'-10	12	10'-11	8	12'-7	24	2'-0	4	
	5	*5	110	28'-6	10	*5	440	4'-6	10	*5	110	29'-7	10	108	47'-2	276	5'-11	12	48	8'-7½	4	12'-8	20	2'-11	24	3'-9	4	30'-7	56	4'-10	44	2'-10	12	10'-11	8	12'-7	24	2'-0	5	
	6	*5	110	34'-0	10	*5	550	4'-6	10	*5	110	35'-4½	10	129	47'-2	322	5'-11	12	48	8'-7½	4	12'-8	20	2'-11	24	3'-9	4	36'-1	68	4'-10	44	2'-10	12	10'-11	8	12'-7	24	2'-0	6	
6x6	2	*6	78	14'-0	14	*6	78	5'-2	14	*6	80	14'-3½	14	52	47'-2	165	7'-0	10	60	9'-10	4	15'-8	24	2'-11	28	12'-6	4	16'-1	28	6'-11	56	3'-4	16	13'-11	12	15'-7	28	2'-0	2	6x6
	3	*6	78	20'-6	14	*6	156	5'-2	14	*6	80	21'-1	14	76	47'-2	230	7'-0	10	60	9'-10	4	15'-8	24	2'-11	28	12'-4	4	22'-7	40	6'-11	56	3'-4	16	13'-11	12	15'-7	28	2'-0	3	
	4	*6	78	27'-0	14	*6	234	5'-2	14	*6	80	27'-10½	14	100	47'-2	275	7'-0	10	60	9'-10	4	15'-8	24	2'-11	28	12'-4	4	29'-1	54	6'-11	56	3'-4	16	13'-11	12	15'-7	28	2'-0	4	
	5	*6	78	33'-6	14	*6	312	5'-2	14	*6	80	34'-8	14	126	47'-2	330	7'-0	10	60	9'-10	4	15'-8	24	2'-11	28	12'-4	4	35'-7	66	6'-11	56	3'-4	16	13'-11	12	15'-7	28	2'-0	5	
	6	*6	78	40'-0	14	*6	390	5'-2	14	*6	80	41'-5½	14	148	47'-2	385	7'-0	10	60	9'-10	4	15'-8	24	2'-11	28	12'-4	4	43'-7	80	6'-11	56	3'-4	16	13'-11	12	15'-7	28	2'-0	6	

① Includes 1'-1"-G" Lap Splice.

Ⓐ *6 Bars X to be ¾"ϕ Smooth and Greased for 1'-0" of Length.

DIMENSIONS FOR BARS B

SIZE	DIM	A	B	C	D	E
4'x4'	3½	3'-2 3/16"	2'-2 5/8"	1'-0 5/8"	3 3/8"	4 5/8"
5'x5'	3½	3'-11 1/16"	2'-8 1/8"	2'-2 1/8"	3 3/8"	5 5/8"
6'x6'	4½	4'-7 7/8"	3'-3 7/8"	2'-7 7/8"	4 1/8"	6"

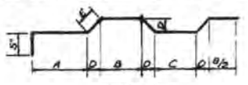

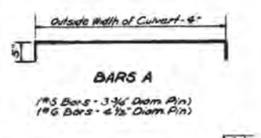

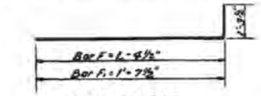

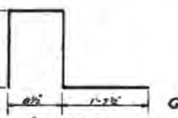

GENERAL NOTES:

Construction Specifications: Latest Approved La. Dept of Highways Standard Specifications.
Design Specifications: A.A.S.H.O 1961 as amended by Int Spec. 1964
Live Load H S 20-44 or Military Loading, whichever is Greater
All Concrete to be Class "A"
All Exposed Corners to have ¾" Chamfer, unless otherwise noted.
Reinforcement shall be Billet - Steel A.S.T.M. A615 or Rail - Steel A.S.T.M. A616 or Axle - Steel A.S.T.M. A617
Dimensions relating to Reinforcing Steel are to Bar Centers.
A 1'-6" Square of Plastic Filter Cloth (See Qualified Products List) shall be placed in contact with Concrete behind each Weep Hole, in addition to approx. 2 Cu. Ft. of Concrete Sand.
For Detail of Joints, See Std. Plan C.M.-48.

Approved by

Chief Engineer — Date 1-11-78

C·C·S·M·4-6·S·90·1

1-11-78	Rev. Weep Hole Details	W.E.M.
11-20-75	Rev. Wearing Surface Detail	W.E.M.
6-8-72	Rev. General Notes & Steel	W.E.M.
8-27-69	Added Rail Steel	W.E.M.
8-17-66	Revised Details	A.L.B.G.
12-8-64	Revised Details	A.L.B.G.
4-8-64	Revised Details	A.L.B.G.

STANDARD PLAN
MULTIPLE OPENINGS
REINF CONCRETE BOX CULVERT
STRAIGHT HDWLS. 2:1 SPILL SLOPE
4'x4' 5'x5' 6'x6'
DATED MAY 15 1962

STATE OF LOUISIANA
DEPARTMENT OF HIGHWAYS

FOR INFORMATIONAL USE

28-NOV-2007 09:52
R:\Standard Plans\English\Old Sheets\CCSM5R45_1.dgn

F.A.P.	STATE PROJECT	PARISH	SHEET NO.

SECTION A-A

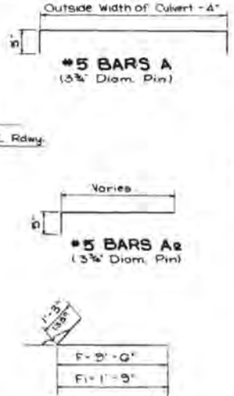

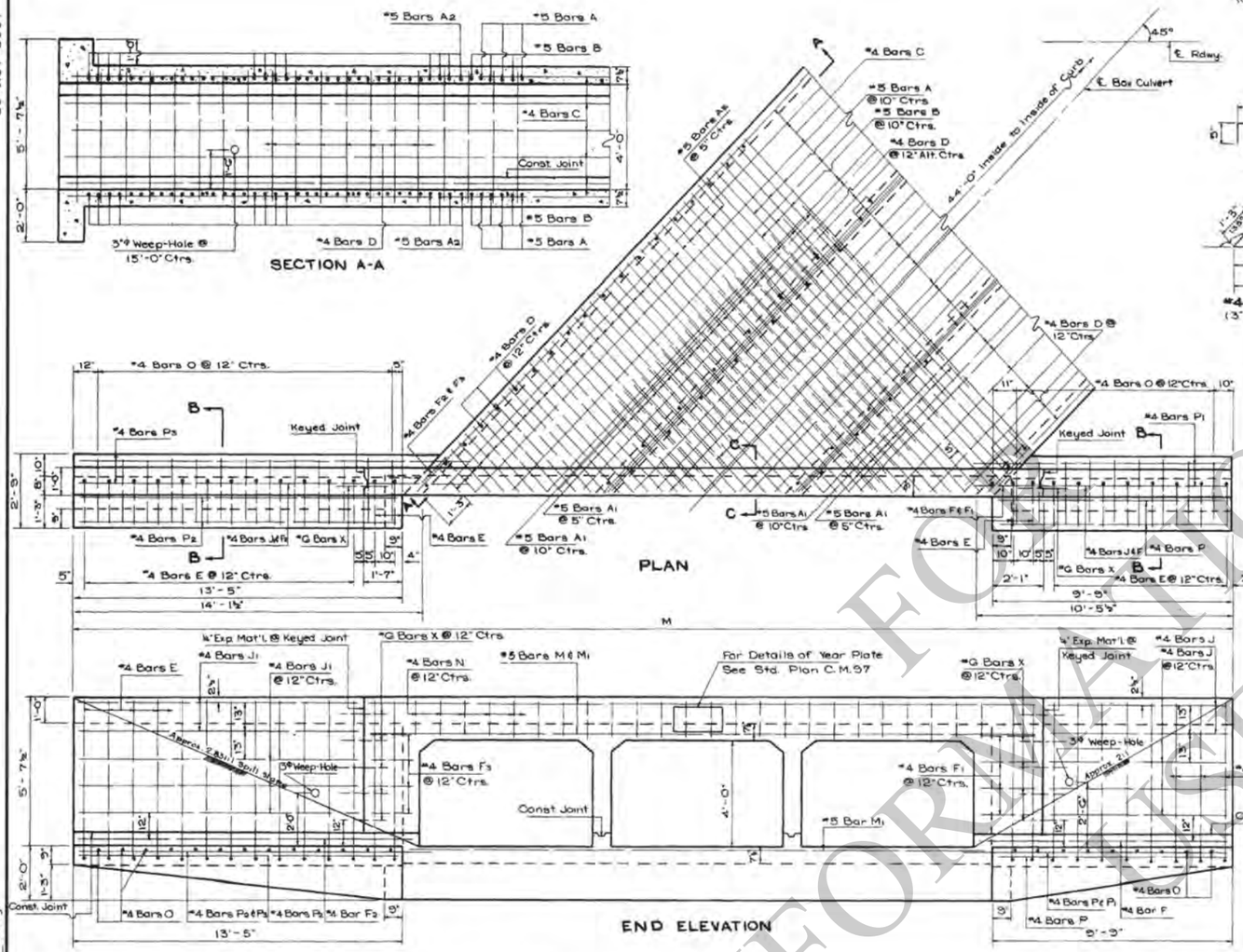

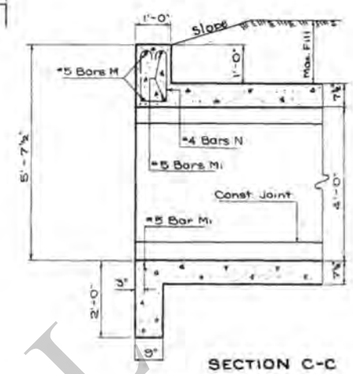

SECTION C-C

SECTION B-B

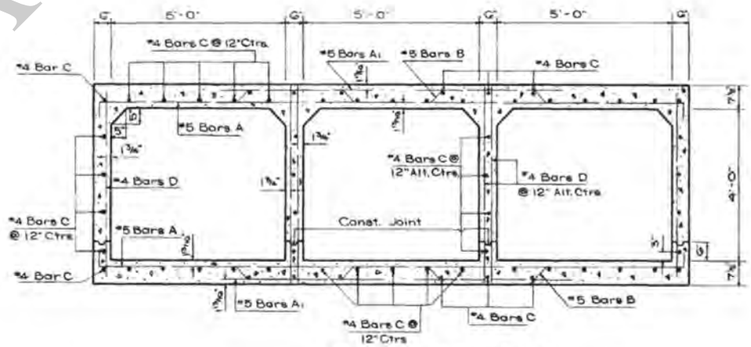

SECTION THRU BARREL

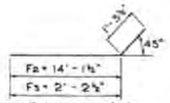

*4 BARS F2 & F3
(3" Diam. Pin)

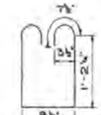

*4 BARS N
(3" Diam. Pin)

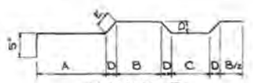

*5 BARS B

DIMENSIONS FOR BARS B						
Size	Pin Diam	A	B	C	D	E
5×4	3⅝"	3'-11½"	2'-8½"	2'-2½"	3½"	5½"

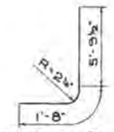

*4 BARS E

GENERAL NOTES

Construction Specifications: Latest Approved La. Dept. of Hwy. Standard Specifications.
Design Specifications: A.A.S.H.O. 1961 as Amended by Int. Spec., 1964.
Live Load: HS 20-44 or Military Loading, Whichever is Greater.
All Concrete to be Class "A".
All Exposed Corners to Have ¾" Chamfer, Unless Otherwise Noted.
Reinforcement Shall be Billet-Steel A.S.T.M.A 615 or Rail-Steel A.S.T.M.A 616 or Axle-Steel A.S.T.M.A 617.

Dimensions Relating to Reinforcing Steel are to Bar Centers.
A 1'-6" Square of Plastic Filter Cloth (See Qualified Products List) Shall be placed in contact with Concrete behind each Weep Hole, in addition to approx. 2 Cu. Ft. of Concrete Sand. For Detail of Joints, See Std. Plan C.M.-48.

DIMENSIONS								QUANTITIES							
OPENINGS			MAX. FILL		WINGS & CURBS			PER LINEAR FT. OF BARREL		FOR 44'-0" OF CULVERT		OPENINGS			
Size	No.	Area	Slab	Wall	M			Steel	Concrete	Steel	Concrete	No.	Size		
Feet		Sq. Ft.	Feet	Feet	Ft.-In.			Lbs.	Cu. Yds.	Lbs.	Cu. Yds.		Feet		
5×4	2	40	21	13	38-5¾			109.51	0.7675	6133	49.97	2	5×4		
	3	60			47-2½			165.22	1.1020	8995	66.83	3			
	4	80	27		56-11¾			220.92	1.4378	11945	83.69	4			
	5	100			66-9¾			276.62	1.7729	15090	100.52	5			
	6	120			76-6½			332.33	2.1080	18291	117.42	6			

BILL OF REINFORCING STEEL FOR 44'-0" CULVERT

OPENINGS	BARREL REINFORCEMENT																																		OPENINGS	
	*5 Bars A		*5 Bars A1		*5 Bars A2				*5 Bars B		*4 Bars C		*4 Bars D		WINGS AND CURBS REINFORCEMENT																							
							Short Bar	Var.	Long Bar						*4 Bars E		*4 Bars F		*4 Bars F1		*4 Bars F2		*4 Bars F3		*4 Bars J		*4 Bars J1		*4 Bars J1		*4 Bars O		*4 Bars P		*4 Bars P1		*4 Bars P2	
Size	No.	Length	No.	Length	No.	Length	Ft.-In.	In.	Ft.-In.	No.	Length	No.	Length	No.	Length	No.	Length	No.	Length	No.	Length	No.	Length	No.	Length	No.	Length	No.	Length	No.	Length	No.	Length	No.	Length	No.	Length	No.	Length
Feet		Ft.-In.		Ft.-In.		Ft.-In.					Ft.-In.		Ft.-In.		Ft.-In.		Ft.-In.		Ft.-In.		Ft.-In.		Ft.-In.		Ft.-In.		Ft.-In.		Ft.-In.		Ft.-In.		Ft.-In.		Ft.-In.		Ft.-In.
5×4	2	84 12'-0	116	4-4	56	1'-9	50000	11'-4	86	12'-3½	42	47'-10	141	4'-11	48	7'-5½	2	10'-9	8	3'-0	2	15'-5	8	3'-6	10	7'-4	10	11'-6	44	2'-4	6	9'-5	4	10'-7	6	13'-1	4	10'-0
	3	72 17'-6	200	4-4	48	1'-9	50000	16'-9	72	18'-0½	62	47'-10	188	4'-11	48	7'-5½	2	10'-9	8	3'-0	2	15'-5	8	3'-6	10	7'-4	10	11'-6	44	2'-4	6	9'-5	4	10'-7	6	13'-1	4	10'-0
	4	68 23'-0	428	4-4	200	1'-9	50000	22'-2	60	23'-5¾	82	47'-10	235	4'-11	48	7'-5½	2	10'-9	8	3'-0	2	15'-5	8	3'-6	10	7'-4	10	11'-6	44	2'-4	6	9'-5	4	10'-7	6	13'-1	4	10'-0
	5	46 28'-6	224	4-4	252	1'-9	50000	27'-7	48	29'-7	102	47'-10	282	4'-11	48	7'-5½	2	10'-9	8	3'-0	2	15'-5	8	3'-6	10	7'-4	10	11'-6	44	2'-4	6	9'-5	4	10'-7	6	13'-1	4	10'-0
	6	34 34'-0	144	4-4	304	1'-9	50000	33'-0	34	35'-4½	122	47'-10	329	4'-11	48	7'-5½	2	10'-9	8	3'-0	2	15'-5	8	3'-6	10	7'-4	10	11'-6	44	2'-4	6	9'-5	4	10'-7	6	13'-1	4	10'-0

OPENINGS	BARREL REINFORCEMENT																																		OPENINGS	
	WINGS AND CURBS REINFORCEMENT																																			
	*4 Bars P3		*4 Bars Pa		*4 Bars Pb		*4 Bars Pc		*4 Bars R		*4 Bars N		*5 Bars M		*5 Bars M1		*G Bars X																			
Size	No.	Length	No.	Length	No.	Length	No.	Length	No.	Length	No.	Length	No.	Length	No.	Length	No.	Length																		
Feet		Ft.-In.		Ft.-In.		Ft.-In.		Ft.-In.		Ft.-In.		Ft.-In.		Ft.-In.		Ft.-In.		Ft.-In.																		
5×4	2	10'-0	32	4'-4	4	19'-4	6	15'-9	20	2'-0	2																									
	3	10'-0	48	4'-4	4	27'-2	6	23'-7	20	2'-0	3																									
	4	10'-0	64	4'-4	4	34'-11	6	31'-4	20	2'-0	4																									
	5	10'-0	78	4'-4	4	44'-7 ③	6	39'-1	20	2'-0	5																									
	6	10'-0	94	4'-4	4	52'-4 ③	6	46'-9 ③	20	2'-0	6																									

① Includes 1'-1'-6" Lap Splice

② Includes 1'-1'-10" Lap Splice

Ⓐ *G Bars X to be ¾"ø Smooth and Greased for 1'-0" of Length

C.C.S.M.5.R.45°-1

APPROVED BY:
Dwayne D. Webb 1-5-78
CHIEF ENGINEER DATE

STANDARD PLAN
MULTIPLE OPENINGS
REINFORCED CONCRETE BOX CULVERTS
STRAIGHT WINGS 45° CROSSING
2:1 SPILL SLOPE NORMAL TO CHANNEL
DATED Aug. 28, 1967 2 THRU 6 - 5'×4'

STATE OF LOUISIANA
DEPARTMENT OF HIGHWAYS

DESIGNED W. E. M.	DETAILED A. P. Booz	TRACED E. S. Johnson, Jr.
CHECKED N. K. B.	CHECKED B. L. Burke	CHECKED W. E. Marcum
IN CHARGE OF		

DATE	DESCRIPTION	BY
1-5-78	Rev. Weep Hole Note	W.T.J.
5-30-75	Revised Spill Slope	W.T.J.
6-8-72	Rev. Gen. Notes for Steel	W.E.M.

REVISIONS

INFORMATIONAL PURPOSE

28-NOV-2007 09:53

R:\Standard Plans\English\Old Sheets\CCSM5R60_1.dgn

F.A.P.	STATE PROJECT	PARISH	SHEET NO.

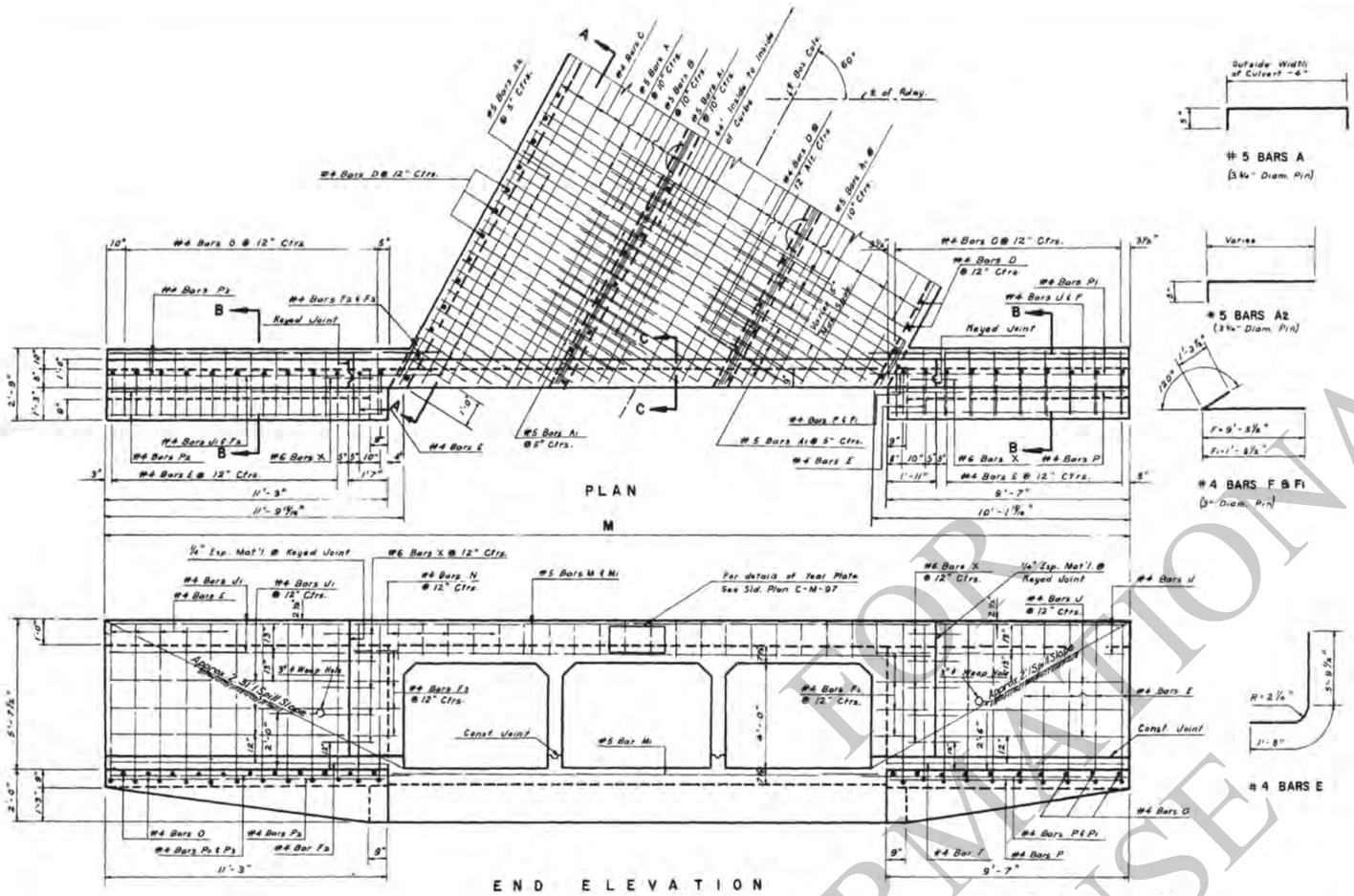

DIMENSIONS						QUANTITIES				OPENINGS	
OPENINGS			MAX. FILL		WINGS & CURBS	PER LINEAR FT OF BARREL		FOR 44'-0" OF CULVERT		OPENINGS	
SIZE FEET	NO.	AREA SQ. FT.	SLAB FEET	WALL FEET	M FT. - IN.	STEEL LBS	CONCRETE CU. YDS.	STEEL LBS.	CONCRETE CU. YDS	NO.	SIZE FEET
5x4	2	40	27	13	34 - 1⅜	109.51	0.7675	5967	47.97	2	5x4
	3	60			40 - 5⅝	165.22	1.1026	8745	64.45	3	
	4	80			46 - 9⅜	220.92	1.4378	11610	80.92	4	
	5	100			53 - 2	276.62	1.7729	14421	97.40	5	
	6	120			59 - 6⅛	332.33	2.1080	17429	113.88	6	

BILL OF REINFORCING STEEL FOR 44'-0" CULVERT

| SIZE | BARREL REINFORCEMENT | | | | | | | | | | | | | | | | | | | | | | WINGS AND CURBS REINFORCEMENT | | | | | | | | | | | | | | | | | | |

F.A.P.	STATE PROJECT	PARISH	SHEET NO.

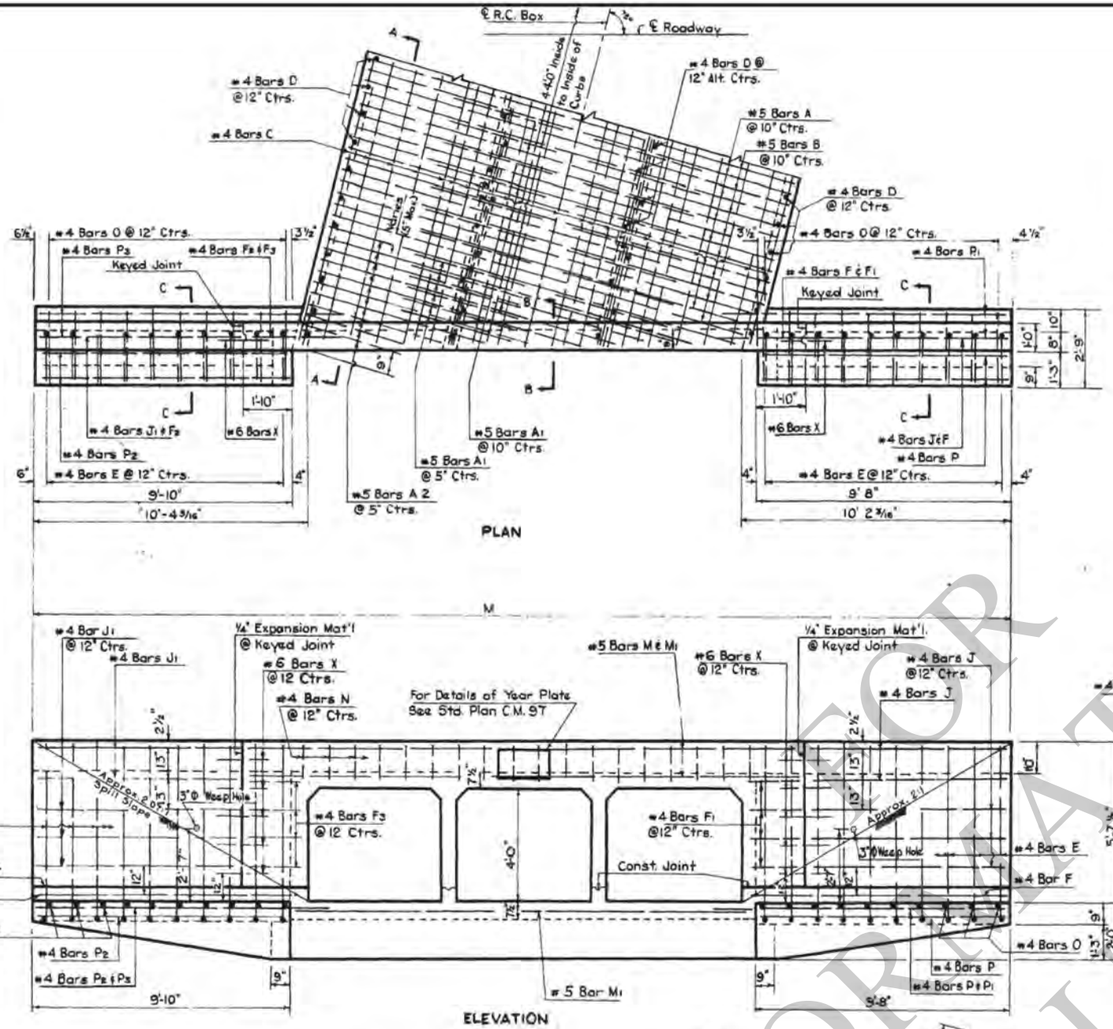

DIMENSIONS						QUANTITIES					
OPENINGS			MAX. FILL		WINGS & CURBS	PER LINEAR FOOT OF BARREL		FOR 44'-0" OF CULVERT		OPENINGS	
SIZE	NO.	AREA	SLAB	WALL	M	STEEL	CONCRETE	STEEL	CONCRETE	NO.	SIZE
FEET		SQ. FT.	FEET	FEET	FEET - INCHES	LBS.	CU. YDS.	LBS.	CU. YDS.		FEET
5x4	2	40	21	13	31 - 4⅞	109.51	0.7675	5877	46.93	2	5x4
	3	60			37 - 1³⁄₁₆	165.22	1.1026	8610	63.23	3	
	4	80			42 - 9½	220.92	1.4378	11314	79.52	4	
	5	100			48 - 5⅞	276.62	1.7729	14125	95.82	5	
	6	120			54 - 2³⁄₁₆	332.33	2.1080	16832	112.12	6	

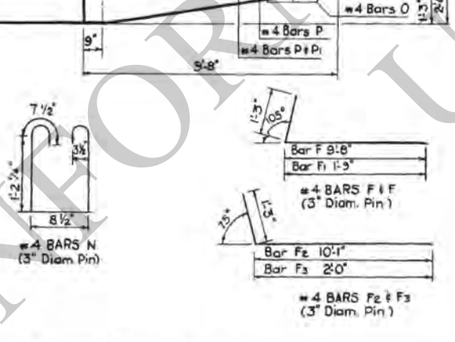

GENERAL NOTES

Construction Specifications: Latest Approved La. Dept. of Hwy. Standard Specifications.
Design Specifications: A.A.S.H.O. 1969 as Amended by Int. Specs., 1972.
Live Load: H S 20-44 or Military Loading, Whichever is Greater.
All Concrete to be Class "A".
All Exposed Corners to have ¾" Chamfer, Unless Otherwise Noted.
Reinforcement Shall be Billet-Steel A.S.T.M. A615 or Rail-Steel A.S.T.M.A. 616 or Axle-Steel A.S.T.M.A. 617.
Dimensions relating to Reinforcing Steel are to Bar Centers.
A 1'-0" Square of Plastic Filter Cloth (See Qualified Products List) shall be placed in contact with Concrete behind each Weep Hole, in addition to approx. 2 Cu. Ft. of Concrete Sand. For Detail of Joints, See Std. Plan C.M.-49.

DIMENSIONS FOR BARS B						
Size	Pin Diam.	A	B	C	D	E
5' x 4'	3¾"	3'-11⁷⁄₁₆"	2'-8⅛"	2'-2⅛"	3⅞"	5½"

BILL OF REINFORCING STEEL FOR 44'-0" CULVERT

| SIZE | BARREL REINFORCEMENT | | | | | | | | | | | | | | | | WINGS AND CURBS REINFORCEMENT | | | | | | | | | | | | | | | |

10/29/2015 14:39

F.A.P.	STATE PROJECT	PARISH	SHEET NO.

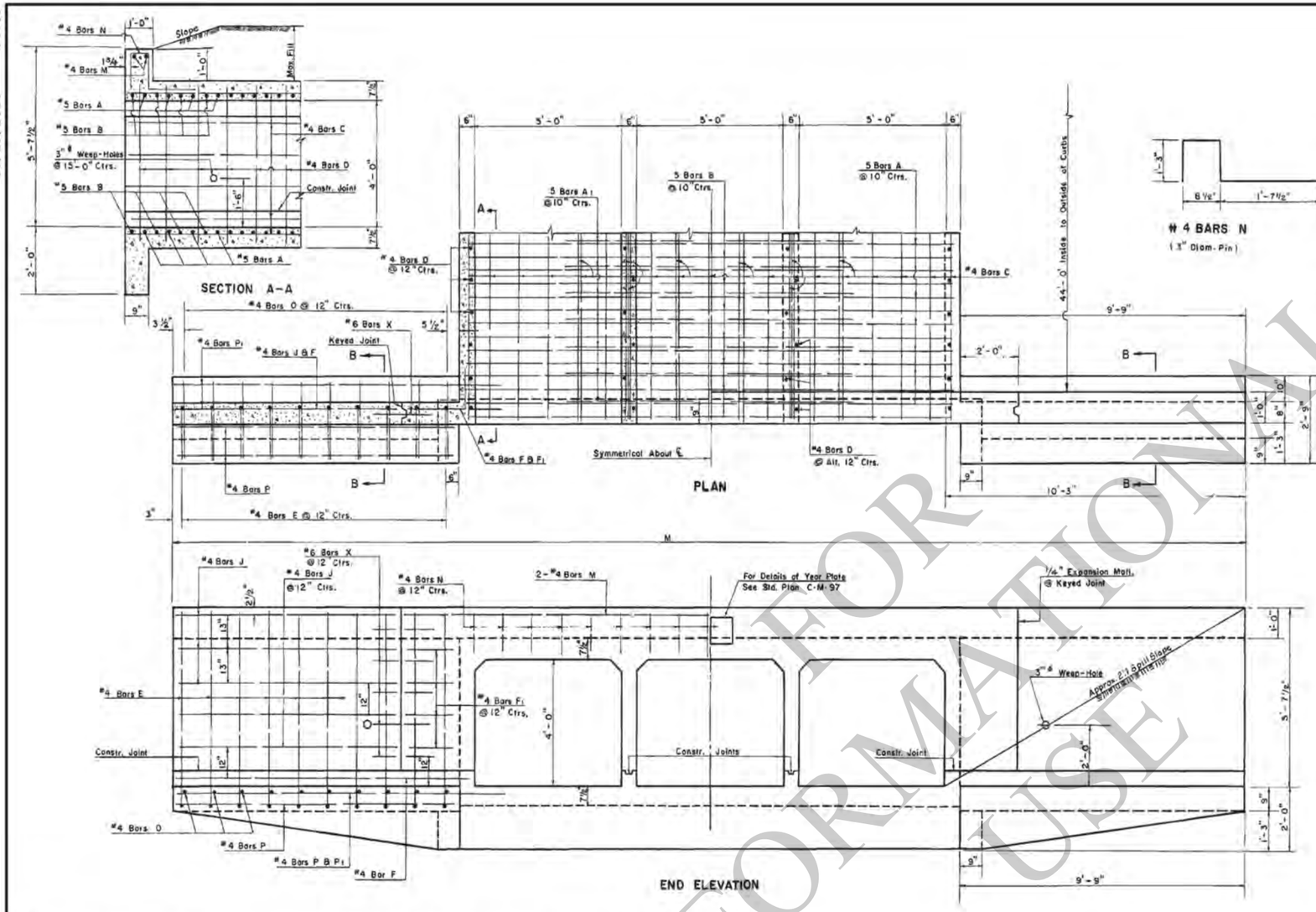

DIMENSIONS							QUANTITIES				OPENINGS	
OPENINGS			MAX. FILL		WINGS & CURBS		PER LINEAR FT. OF BARREL		FOR 44'-0" OF CULVERT			
SIZE	NO.	AREA	SLAB	WALL	M		STEEL	CONCRETE	STEEL	CONCRETE	NO.	SIZE
FEET		SQ.FT.	FEET	FEET	FT.-IN.		LBS.	CU.YDS.	LBS.	CU.YDS.		FEET
5X4	2	40	21	13	31-0		110.35	0.7675	5835	46.81	2	5X4
	3	60	27		36-6		166.05	1.1026	8453	63.06	3	
	4	80			42-0		221.75	1.4377	11078	79.30	4	
	5	100			47-6		277.46	1.7729	13697	95.55	5	
	6	120			53-0		333.16	2.1080	16322	111.79	6	

BILL OF REINFORCING STEEL FOR 44'-0" CULVERT

OPENINGS		BARREL REINFORCEMENT										WINGS AND CURBS REINFORCEMENT																				OPENINGS	
		#5 BAR A		#5 BARS A1		#5 BARS B		#4 BARS C		#4 BARS D		#4 BARS E		#4 BARS F		#4 BARS F1		#4 BARS J		#4 BARS M		#4 BARS N		#4 BARS O		#4 BARS P		#4 BARS P1		#6 BARS X Ⓐ			
SIZE	NO.	NO.	LENGTH	NO.	LENGTH	NO.	LENGTH	NO.	LENGTH ①	NO.	LENGTH	NO.	LENGTH	NO.	LENGTH	NO.	LENGTH	NO.	LENGTH	NO.	LENGTH	NO.	LENGTH	NO.	LENGTH	NO.	LENGTH	NO.	LENGTH	NO.	LENGTH	NO.	SIZE
FEET			FT.-IN.		FT.-IN.		FT.-IN.		FT.-IN.		FT.-IN.		FT.-IN.		FT.-IN.		FT.-IN.		FT.-IN.		FT.-IN.		FT.-IN.		FT.-IN.		FT.-IN.		FT.-IN.		FEET
5X4	2	110	12-2	110	4-4	110	12-5¼	42	47-2	138	4-11	40	7-5½	4	11-2	16	3-4	20	7-5	4	14-11	24	4-10	40	2-4	12	9-5	8	11-1	20	2-0	2	5X4
	3	110	17-8	220	4-4	110	18-2½	62	47-2	184	4-11	40	7-5½	4	11-2	16	3-4	20	7-5	4	20-5	34	4-10	40	2-4	12	9-5	8	11-1	20	2-0	3	
	4	110	23-2	330	4-4	110	23-11¾	82	47-2	230	4-11	40	7-5½	4	11-2	16	3-4	20	7-5	4	25-11	46	4-10	40	2-4	12	9-5	8	11-1	20	2-0	4	
	5	110	28-8	440	4-4	110	29-9	102	47-2	276	4-11	40	7-5½	4	11-2	16	3-4	20	7-5	4	31-5	56	4-10	40	2-4	12	9-5	8	11-1	20	2-0	5	
	6	110	34-2	550	4-4	110	35-6¼	122	47-2	322	4-11	40	7-5½	4	11-2	16	3-4	20	7-5	4	36-11	68	4-10	40	2-4	12	9-5	8	11-1	20	2-0	6	

① Includes One 1'-6" Lap Splice.

Ⓐ #6 Bars X to be ¾" ø Smooth and Greased for 1'-0" of Length.

General Notes:
Construction Specifications: Latest Approved La. Dept. of Highways Standard Specifications.
Design Specifications: A. A. S. H. O. 1961 as Amended by Int. Spec. 1964.
Live Load: HS 20-44 or Military Loading, Whichever is Greater.
All Concrete to be Class "A".
All Exposed Corners to Have ¾" Chamfer, Unless Otherwise Noted.
Reinforcement Shall be Billet-Steel A.S.T.M. A615 or Rail-Steel A.S.T.M. A616 or Axle-Steel A.S.T.M. A617
Dimensions Relating to Reinforcing Steel are to Bar Centers.
A 1'-6" Square of Plastic Filter Cloth (See Qualified Products List) shall be placed in contact with Concrete behind each Weep Hole, in addition to approx. 2 Cu. Ft. of Concrete Sand.
For Detail of Joints, See Std. Plan C.M.-49.

APPROVED BY:
Dongey D. White
CHIEF ENGINEER
1-11-78
DATE

C·C·S·M· 5·R·90-1

STANDARD PLAN
MULTIPLE OPENINGS
REINFORCED CONCRETE BOX CULVERTS
STRAIGHT WINGS 2:1 SPILL SLOPE
2 THRU 6-5'X4'

DATED Sept. 7, 1965

DATE	DESCRIPTION	BY
1-11-78	Rev. Weep Hole Note	W.T.J.
1-28-76	Rev. Slope Intercept	W.T.J.
6-8-72	Rev. General Notes for Steel	W.E.M.
9-5-67	Steel & Conc. Quant. Rev.	W.E.M.
5-2-67	Added Axle Steel	W.E.M.

REVISIONS

STATE OF LOUISIANA
DEPARTMENT OF HIGHWAYS

DESIGNED W.E. Marcum	DETAILED Earl J. Martel	TRACED E.P. Eichmeier
CHECKED N.K. Brown	CHECKED W.E. Marcum	CHECKED Al Shows
IN CHARGE OF		

FOR INFORMATIONAL USE

IP_PWP:dms09544\CCSM5R90_1.dgn

F.A.P.	STATE PROJECT	PARISH	SHEET NO.

28-NOV-2007 09:54

R:\Standard Plans\English\Old Sheets\CCSM6-7845_1.dgn

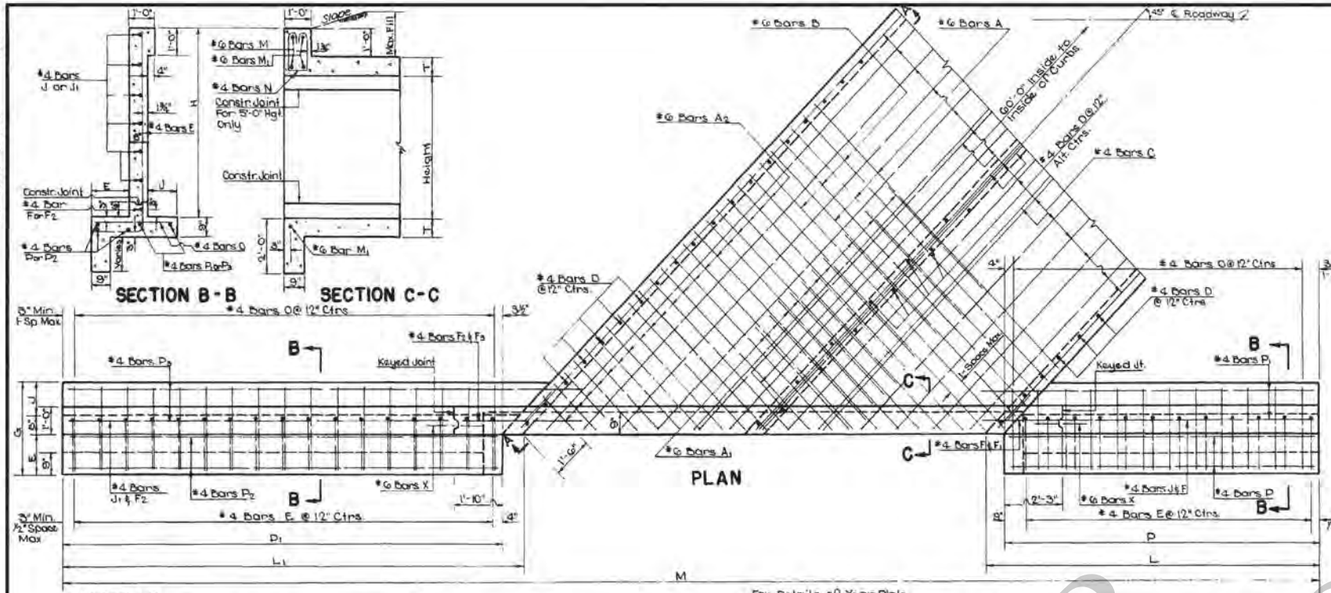

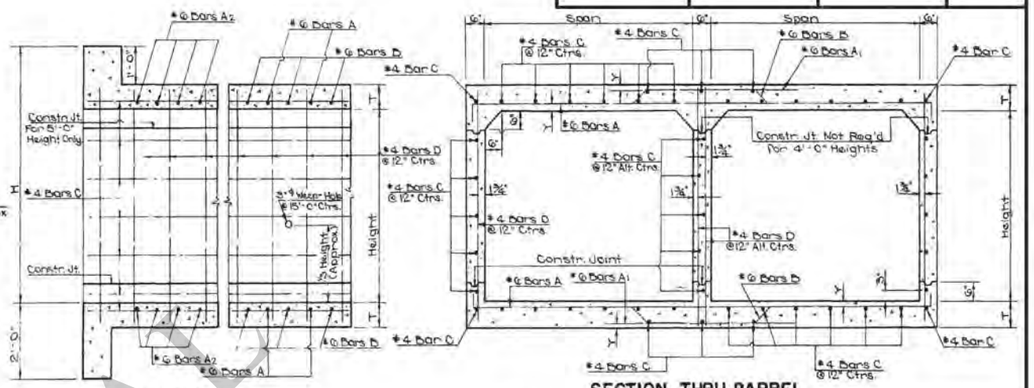

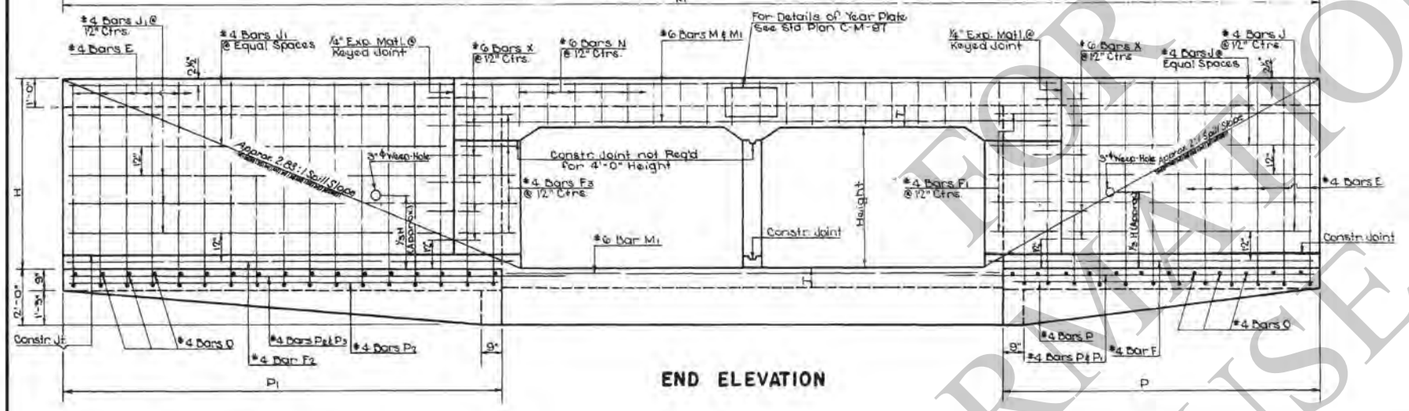

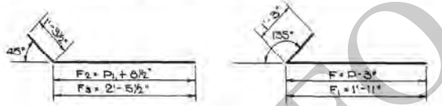

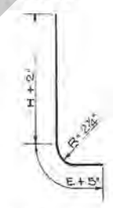

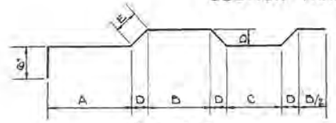

DIMENSIONS FOR BARS B						
SIZE	DIAM. PIN	A	B	C	D	E
6'-0"	4½"	4'-7⅞"	3'-1⅜"	2'-7⅜"	4¼"	0"
7'-0"	4½"	5'-4⅝"	3'-7⅛"	3'-1⅛"	4¾"	6¾"

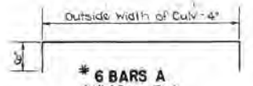

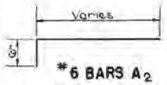

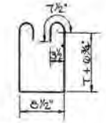

DIMENSIONS																				QUANTITIES				OPENINGS	
OPENINGS		MAX. FILL		BARREL		WINGS AND CURBS														PER LIN. FT OF BARREL		60'-0" CULVERT			
SIZE	NO.	AREA	SLABS	WALLS	T	Y	E	J	G	H	L	L_1	P	P_1	M	STEEL	CONCRETE	STEEL	CONCRETE	NO.	SIZE
FEET		Sq.FT.	FT.	FT.	IN.	IN.	FT-IN.	FT-IN.	FT-IN.	FT-IN.	FT-IN.	FT-IN.	FT-IN.	FT-IN.	FT-IN.	POUNDS	CU.YDS.	POUNDS	CU.YDS.		
6x4	2	48	10												42-11⅞	127.76	0.9074	9,190	71.79	2	
	3	72													52-1⅞	193.32	1.3117	13,734	98.56	3	
	4	96	20	12	8	1⅞	1-3	10	2-8	5-8	10-8½	14-6½	10-0	13-10	61-3⅝	258.68	1.7161	18,451	125.92	4	6x4
	5	120													70-6⅛	324.45	2.1204	23,242	152.09	5	
	6	144													79-8⅜	401.17	2.5247	28,373	178.65	6	
6x5	2	60	15												47-10⅛	131.76	0.9630	9,701	79.94	2	
	3	90													51-0⅛	196.66	1.3856	14,520	107.81	3	
	4	120	20	7	8	1⅞	1-5	1-2	3-3	6-8	12-0½	17-5½	12-0	16-9	66-2⅜	265.56	1.8087	19,117	135.60	4	6x5
	5	150													75-5⅝	332.46	2.2315	24,007	163.73	5	
	6	180													84-7⅞	410.52	2.6544	29,223	191.66	6	
7x4	2	56	12												45-9⅛	149.66	1.0540	10,682	81.42	2	
	3	84													50-4⅜	227.84	1.5309	14,640	112.93	3	
	4	112	16	12	8½	1⅞	1-3	10	2-8	5-8½	10-8½	14-6½	10-0	13-10	64-11⅝	305.20	2.0077	21,616	144.44	4	7x4
	5	140													77-6⅛	382.66	2.4648	27,450	176.94	5	
	6	168													86-2⅜	472.54	2.8814	33,672	207.45	6	

BILL OF REINFORCING STEEL FOR 60'-0" CULVERT

BARREL REINFORCEMENT

OPENINGS Size	No.	*6 BARS A No	*6 BARS A Length	*6 BARS A Spac	*6 BARS A_1 No	*6 BARS A_1 Length	*6 BARS A_1 Spac	*6 BARS A_2 No	*6 BARS A_2 Short Bar	*6 BARS A_2 Var.	*6 BARS A_2 Long Bar	*6 BARS A_2 Spac	*6 BARS B No	*6 BARS B Length	*6 BARS B Spac	*4 BARS C No	*4 BARS C Length	*4 BARS D No	*4 BARS D Length
Feet			Ft-In.	In.		Ft-In.	In.		Ft-In.	In.	Ft-In.	In.		Ft-In.	In.		Ft-In.		Ft-In.
6x4	2	64	14-2	14	112	5-2	14	80	2-1	7.0000	13-2	7	86	14-5⅜	14	46	63-10	168	5-0
	3	74	20-5	14	264	5-2	14	124	2-1	7.0000	19-7	7	76	21-3	14	66	63-10	252	5-0
	4	62	27-2	14	408	5-2	14	172	2-1	7.0000	26-1	7	62	26-0⅝	14	90	63-10	315	5-0
	5	50	33-8	14	550	5-2	14	216	2-1	7.0000	33-0	7	52	34-10	14	112	63-10	378	5-0
	6	40	40-2	14	694	5-2	14	260	2-1	7.0000	39-5	7	40	②45-9⅜	14	134	63-10	441	5-0
6x5	2	64	14-2	14	112	5-2	14	80	2-1	7.0000	13-2	7	86	14-5⅜	14	49	63-10	169	6-0
	3	74	20-5	14	244	5-2	14	124	2-1	7.0000	19-7	7	76	21-3	14	72	63-10	252	6-0
	4	62	27-2	14	408	5-2	14	172	2-1	7.0000	26-1	7	62	26-0⅝	14	95	63-10	315	6-0
	5	50	33-8	14	550	5-2	14	216	2-1	7.0000	33-0	7	52	34-10	14	118	63-10	378	6-0
	6	40	40-2	14	694	5-2	14	260	2-1	7.0000	39-5	7	40	②45-9⅜	14	141	63-10	441	6-0
7x4	2	56	16-2	15	122	5-6	6⅜	104	2-1	6.4800	15-7	6½	86	10-6	15	50	63-10	189	5-1
	3	74	23-6	15	266	5-6	6⅜	156	2-1	6.5000	22-0	6½	76	24-4	15	74	63-10	252	5-1
	4	60	31-2	13	446	5-6	6⅜	212	2-1	6.5000	30-3	6½	60	32-2	13	96	63-10	315	5-1
	5	46	36-6	15	650	5-6	6⅜	260	2-1	6.5000	35-10	6½	46	40-0	15	122	63-10	378	5-1
	6	32	③46-6	15	802	5-6	6⅜	324	2-1	6.5000	③45-5	6½	32	③50-0	15	146	63-10	441	5-1

CURBS AND WINGS REINFORCEMENT

*4 BARS E No	*4 BARS E Length	*4 BARS F No	*4 BARS F Length	*4 BARS F_1 No	*4 BARS F_1 Length	*4 BARS F_2 No	*4 BARS F_2 Length	*4 BARS F_3 No	*4 BARS F_3 Length	*4 BARS J No	*4 BARS J Length	*4 BARS J_1 No	*4 BARS J_1 Length	*4 BARS O No	*4 BARS O Length	*4 BARS P No	*4 BARS P Length	*4 BARS P_1 No	*4 BARS P_1 Length	*4 BARS P_2 No	*4 BARS P_2 Length	*4 BARS P_3 No	*4 BARS P_3 Length	*4 BARS N No	*4 BARS N Length	*6 BARS M No	*6 BARS M Length	*6 BARS M_1 No	*6 BARS M_1 Length	*6 BARS X No	*6 BARS X Length
	Ft-In.		Ft-In.		Ft-In.		Ft-In.		Ft-In.		Ft-In.		Ft-In.		Ft-In.		Ft-In.		Ft-In.		Ft-In.		Ft-In.		Ft-In.		Ft-In.		Ft-In.		Ft-In.
46	7-6	2	11-0	8	3-2	2	15-10	6	3-9	10	7-5	10	11-8	46	2-4	6	9-8	4	10-10	6	13-6	4	10 5	36	4-5	4	22-7	6	18-7	20	2-0
																								56	4-5	4	31-10	6	27-10	20	2-0
																								74	4-5	4	⑤43-2	6	37-0	24	2-0
																								92	4-5	4	⑤52-4	6	⑤46-4	20	2-0
																								110	4-5	4	⑤61-7	6	⑤57-7	20	2-0
58	8-8	2	13-0	10	3-2	2	18-9	10	3-9	12	9-5	12	14-7	58	2-10	6	11-8	4	12-10	6	16-5	4	18-8	36	4-5	4	22-7	6	18-7	24	2-0
																								56	4-5	4	31-10	6	27-10	24	2-0
																								74	4-5	4	⑤43-2	6	37-0	24	2-0
																								92	4-5	4	⑤52-4	6	⑤46-4	20	2-0
																								110	4-5	4	⑤61-7	6	⑤57-7	24	2-0
46	7-0½	2	11-0	8	3-2	2	15-10	6	3-9	10	7-5	10	11-8	46	2-4	6	9-8	4	10-10	6	13-6	4	16-5	44	4-6	4	25-5	6	21-5	20	2-0
																								64	4-6	4	36-1	6	32-0	20	2-0
																								85	4-6	4	⑤46-10	6	⑤44-10	20	2-0
																								106	4-6	4	⑤59-5	6	⑤55-5	20	2-0
																								126	4-6	4	⑤70-0	6	⑤66-0	20	2-0

① Incl. One 1'-6" Lap Splice.
② Incl. One 2'-2" Lap Splice.
③ Does Not Incl. Lap Splice. When Bar Length Exceeds 40'-0" Add One 2'-2" Lap Splice.

Ⓐ *6 Bars X to be ⅜" ϕ Smooth and Greased For 1'-0" of Length.

APPROVED BY:
Dempsey D. Wilds 1-5-78
CHIEF ENGINEER DATE

General Notes:

Construction Specifications: Latest Approved La. Dept. of Hwys. Standard Specifications.
Design Specifications: A.A.S.H.O. 1961 as Amended by Int. Specs. 1964.
Live Load: HS 20-44 or Military, Whichever is Greater.
All Concrete to be Class "A".
All Exposed Corners to Have ¾" Chamfer, Unless Otherwise Noted.
Reinforcement Shall Be Billet-Steel A.S.T.M. A615 or Rail-Steel A.S.T.M. A616 or Axle-Steel A.S.T.M. A617.
Dimensions Relating to Reinforcing Steel are to Bar Centers.
A 1'-6" Square of Plastic Filter Cloth (See Qualified Products List) shall be placed in contact with Concrete behind each Weep Hole, in addition to approx. 2 Cu.Ft. of Concrete Sand.
For Detail of Joints, See Std. Plan C.M.-49.

C·C·S·M·6-7·R-45°·1

STANDARD PLAN
MULTIPLE OPENINGS
REINF. CONCRETE BOX CULVERT
STRAIGHT WINGS 45° CROSSING
2:1 SPILL SLOPE NORMAL TO CHANNEL
DATED Dec. 29, 1964 — 6'x4' 6'x5' 7'x4'

STATE OF LOUISIANA
DEPARTMENT OF HIGHWAYS

DESIGNED	DETAILED Earl J. Martel	TRACED J.L. Read
CHECKED	CHECKED W.E. Grice	CHECKED W.E. Grice
IN CHARGE OF		

DATE	DESCRIPTION	BY
1-5-78	Rev. Weep Hole Note	W.T.J.
6-10-75	Rev. Slope Intercept	W.T.J.
6-8-72	Rev. General Notes For Steel	W.E.M.
4-27-64	Added Axle Steel	W.E.M.

REVISIONS

FOR INFORMATIONAL USE

F.A.P.	STATE PROJECT	PARISH	SHEET NO.

#4 Bars E

#4 Bars N (3" Diam. Pin)

#4 Bars F_2 & F_3 (3" Diam. Pin)

#4 Bars F & F_1 (3" Diam. Pin)

PLAN

SECTION C-C

SECTION A-A

SECTION B-B

SECTION THROUGH BARREL

#6 Bars A_2 (4½" Diam. Pin)

#6 Bars A (4½" Diam. Pin)

#6 Bars B (4½" Diam. Pin)

DIMENSIONS FOR BARS B					
SPAN	A	B	C	D	E
6'-0"	4'-7⅞	3'-1½	0'-7⅝	6⅝"	0"
7'-0"	5'-4⅝	3'-7⅛	3'-1½	4⅝"	0⅝"

END ELEVATION

DIMENSIONS																		QUANTITIES				OPENINGS	
OPENINGS			MAX. FILL		BBL.	WINGS AND CURBS												PER LINEAR FOOT OF BARREL		44'-0" CULVERT			
SIZE	Nº	AREA	SLAB	WALLS	T	E	J	G	H	L	L_1	P	P_1	M				STEEL	CONC.	STEEL	CONC.	Nº	SIZE
FT.		Sq. Ft	Ft	Ft.	In.	Ft.-In.	Ft.-In.	Ft.-In.	Ft.-In.	Ft.-In.	Ft.-In.	Ft.-In.	Ft.-In.	Ft.-In.				Pounds	Cu.Yds.	Pounds	CuYds.		
G x 4	2	48	16	20	8	1-3	0-10	2-0	5-8	10-3 5/16	12-1 1/2	0-0	11-7	36-11¼				127.76	0.9074	6868	56.05	2	G x 4
	3	72												44-5¾				193.80	1.3117	10146	74.65	3	
	4	96												51-11¾				256.68	1.7161	13560	94.72	4	
	5	120												58-5¾				324.45	2.1204	16965	114.56	5	
	6	144												66-11¾				401.17	2.5247	20346	134.40	6	
G x 5	2	60	15	20	7	1-5	1-2	3-3	6-8	12-3 5/16	14-0 3/8	11-9	13-8	41-0½				131.76	0.9650	7305	61.02	2	G x 5
	3	90												48-6⅛				198.66	1.3858	10617	82.31	3	
	4	120												56-0¾				265.56	1.8067	14080	103.01	4	
	5	150												63-6⅛				332.46	2.2315	17556	123.70	5	
	6	180												71-0⅝				410.52	2.6544	21002	144.39	6	
7 x 4	2	56	19	20	8½	1-3	0-10	2-0	5-8½	10-4 15/16	12-1 3/8	0-10	11-7	39-5¾				140.88	1.0540	7966	62.25	2	T x 4
	3	84												47-11⅛				227.54	1.7309	11665	85.57	3	
	4	112												56-7⅝				305.90	2.0077	15887	108.92	4	
	5	140												65-3½				382.86	2.4849	20092	132.26	5	
	6	168												73-11⅜				472.54	2.9016	24665	155.61	6	

BILL OF REINFORCING STEEL FOR 44'-0" CULVERT

| OPENINGS | BARREL REINFORCEMENT | | | | | | | | | | | | | | | | | |

APPROVED BY: Dempsey D. Wilds — CHIEF ENGINEER — 1-5-18 DATE

F.A.P.	STATE PROJECT	PARISH	SHEET NO.

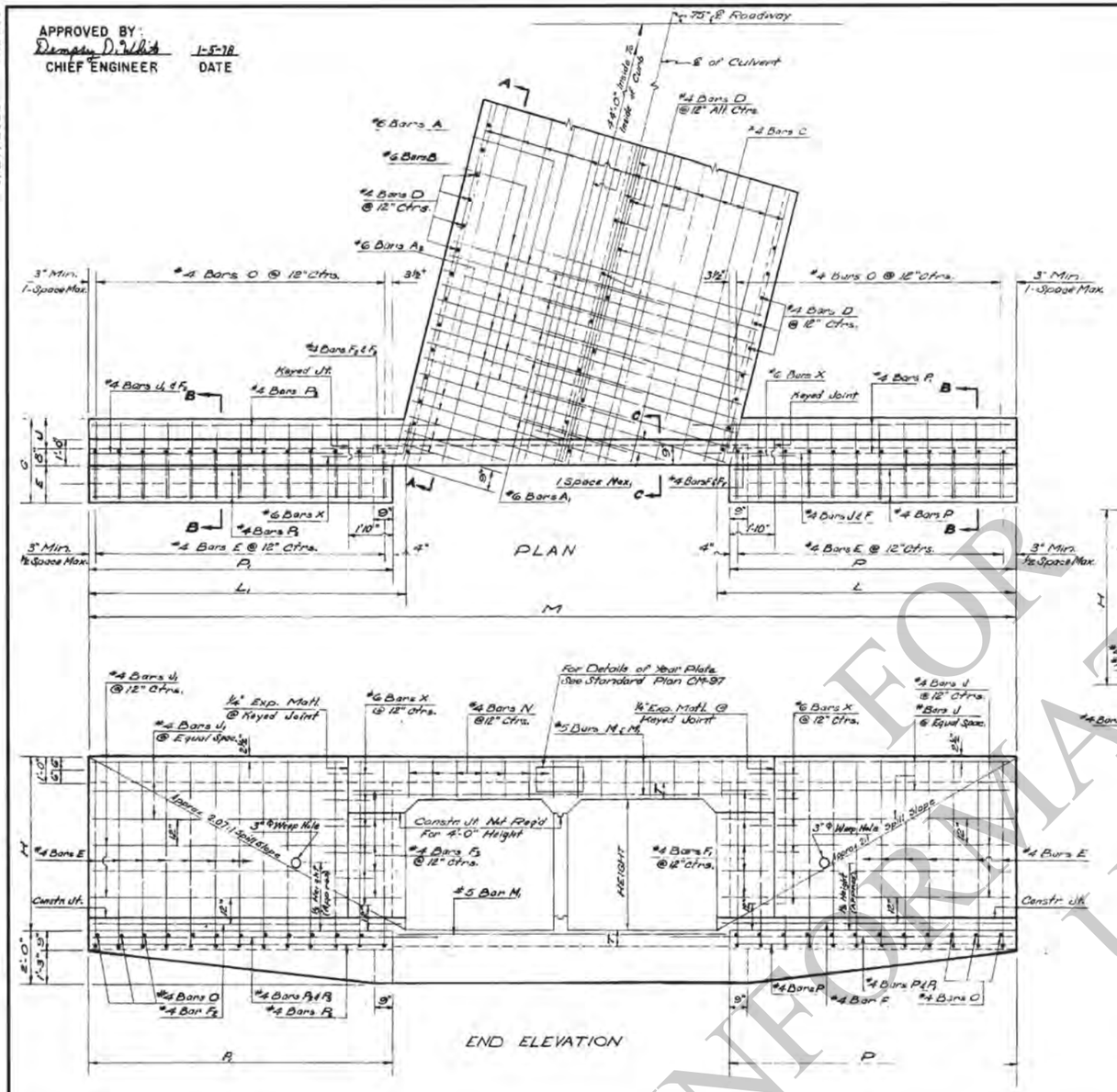

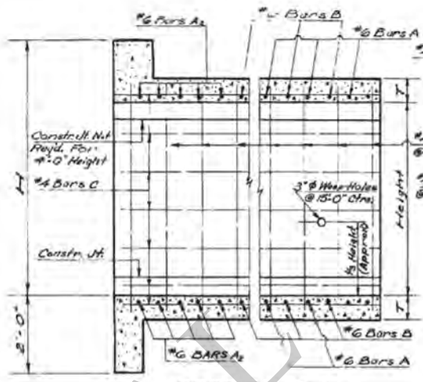

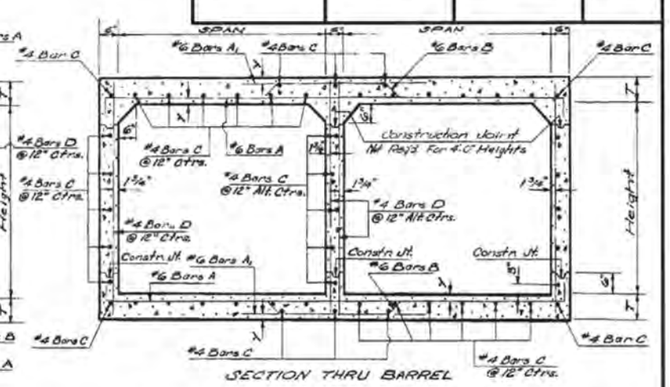

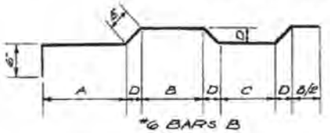

DIMENSIONS FOR BARS B						
SPAN	DIAM PIN	A	B	C	D	E
6'-0"	4½"	4'-7⅝"	3'-1⅝"	2'-7½"	4¼"	6"
7'-0"	4½"	5'-4⅝"	3'-7½"	3'-1⅛"	4⅝"	6½"

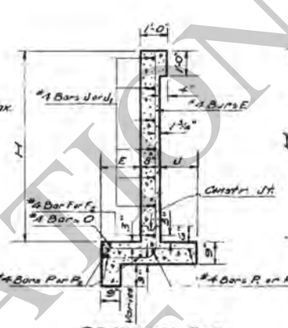

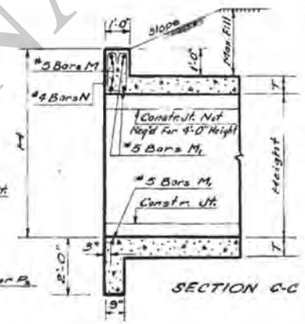

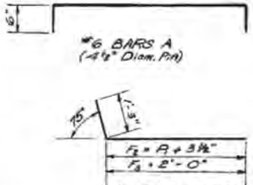

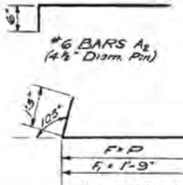

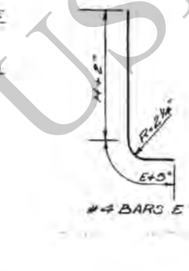

DIMENSIONS																				QUANTITIES				OPENING	
OPENINGS			MAX FILL	BARREL			WINGS AND CURBS													PER LIN FT OF BARREL		44'0" CULVERT			
SIZE FEET	NO.	AREA SQ.FT.	GLASS WALLS FEET	T IN.	Y IN.	E Ft-In.	J Ft-In.	G Ft-In.	H Ft-In.	L Ft-In.	L_1 Ft-In.	P Ft-In.	P_1 Ft-In.	M Ft-In.	STEEL POUNDS	CONCRETE CU.YDS.	STEEL POUNDS	CONCRETE CU.YDS.	NO.	SIZE FEET
6x4	2	48	16											34-4 5/16	127.76	6.3074	6858	34.15	2	
	3	72												41-1 5/16	193.32	1.5117	10042	73.77	3	
	4	96	20	12	8	1 7/8	1-3	0-10	2-9	5-8	10-4 5/16	11-1 3/16	9-10	10-7	47-10 5/16	268.88	1.7161	13520	85.39	4	6x4
	5	120													54-6 5/16	324.45	2.1804	16596	113.02	5	
	6	144													61-3 5/16	401.17	2.3247	20398	132.64	6	
6x5	2	60	15												38-4 5/16	131.76	0.9650	7295	60.58	2	
	3	90													45-1 7/16	198.66	1.5856	10506	81.06	3	
	4	120	20	7	8	1 7/8	1-5	1-2	3-3	6-8	12-4 5/16	13-1 5/16	11-10	12-7	51-10 5/16	265.56	1.8087	13845	101.54	4	6x5
	5	150													58-6 5/16	332.46	2.2315	17182	122.02	5	
	6	180													65-3 5/16	410.52	2.6544	21068	142.49	6	
7x4	2	56	12												36-5 5/16	149.86	1.0540	7878	61.21	2	
	3	84													44-2 1/16	227.54	1.5509	11670	84.31	3	
	4	112	16	12	8½	1 7/8	1-3	0-10	2-9	5-8½	10-4 5/16	11-1 3/16	9-10	10-7	51-10 5/16	305.20	2.0077	15466	107.41	4	7x4
	5	140													59-5 5/16	382.86	2.4846	19417	130.52	5	
	6	168													67-0 5/16	472.54	2.9614	23919	153.62	6	

General Notes:
Construction Specifications: Latest Approved La. Dept. of Highway Standard Specifications.
Design Specifications: A.A.S.H.O. 1961 As Amended By Int. Spec. 1964.
Live Load: H.S. 20-44 or Military; Whichever is Greater.
All Concrete To Be Class "A".
All Exposed Corners To Have ¾" Chamfer Unless Otherwise Noted.
Reinforcement Shall Be Billet Steel A.S.T.M. A615 or Rail Steel A.S.T.M. A 616 or Axle Steel A.S.T.M. A 617
Dimensions Relating To Reinforcing Steel Are To Bar Centers.
A 1'-6" Square of Plastic Filter Cloth (See Qualified Products List) shall be placed in contact with Concrete behind each Weep Hole, in addition to approx. 2 Cu. Ft. of Concrete Sand.
For Detail of Joints, See Std. Plan C.M.-99.

BILL OF REINFORCING STEEL FOR 44'-0" CULVERT

BARREL REINFORCEMENT

OPENINGS		#6 BARS A		#6 BARS A_1		#6 BARS A_2				#6 BARS B		#4 BARS C		#4 BARS D	
SIZE FEET	NO.	NO.	Length Ft.-In.	Spac. In.	NO.	Length Ft.-In.	Spac. In.	NO.	SHORT BAR Ft.-In.	VAR. Ft.-In.	LONG BAR Ft.-In.	SPAC. In.	NO.	Length Ft.-In.	Spac. In.	NO.	Length Ft.-In.
6x4	2	74	14-2	14	38	5-2	14	20	3-0	26.2500	11-9	7	74	14-5½	14	46	47-2
	3	70	20-0	14	168	5-2	14	32	3-0	26.1429	18.3	7	72	21-3	14	68	47-2
	4	68	27-2	14	264	5-2	14	44	3-0	26.1000	24-9	7	68	28-0½	14	90	47-2
	5	64	33-8	14	360	5-2	14	56	3-0	26.1538	31-4	7	66	34-10	14	112	47-2
	6	62	②42-4	14	470	5-2	14	68	3-0	26.1250	37.10	7	62	43-3½	14	134	47-2
6x5	2	74	14-2	14	52	5-2	14	20	3-0	26.2500	11-9	7	74	14-5½	14	49	47-2
	3	70	20-8	14	168	5-2	14	32	3-0	26.1429	18.3	7	72	21-3	14	72	47-2
	4	68	27-2	14	244	5-2	14	44	3-0	26.1000	24-9	7	68	28-0½	14	95	47-2
	5	64	33-8	14	360	5-2	14	56	3-0	26.1538	31-4	7	66	34-10	14	118	47-2
	6	62	②42-4	14	470	5-2	14	68	3-0	26.1250	37.10	7	62	43-3½	14	141	47-2
7x4	2	76	16-2	13	88	5-8	9/13	28	3-0	26.3333	15-2	6½	76	16-6	13	50	47-2
	3	74	23-8	13	150	5-8	9/13	40	3-0	26.2222	21-2	6½	76	24-8	13	74	47-2
	4	70	31-2	13	232	5-8	9/13	56	3-0	26.1500	29-3	6½	70	32-2	13	98	47-2
	5	66	38-8	13	332	5-8	9/13	72	3-0	26.2333	37.4	6½	66	40-0	13	122	47-2
	6	62	②48-4	13	514	5-8	9/13	88	3-0	26.2581	②45-5	6½	62	②50-0	13	146	47-2

CURBS AND WINGS REINFORCEMENT

#4 BARS E		#4 BARS F		#4 BARS F_1		#4 BARS F_2		#4 BARS F_3		#4 BARS J		#4 BARS J_1		#4 BARS O		#4 BARS P		#4 BARS P_1		#4 BARS P_2		#4 BARS P_3		#4 BARS N		#5 BARS M		#5 BARS M_1		#6 BARS X	
NO.	Length Ft.-In.	NO.	Length Ft.-In.	NO.	Length Ft.-In.	NO.	Length Ft.-In.	NO.	Length Ft.-In.	NO.	Length Ft.-In.	NO.	Length Ft.-In.	NO.	Length Ft.-In.	NO.	Length Ft.-In.	NO.	Length Ft.-In.	NO.	Length Ft.-In.	NO.	Length Ft.-In.	NO.	Length Ft.-In.	NO.	Length Ft.-In.	NO.	Length Ft.-In.	NO.	Length Ft.-In.
42	7-6	2	11-1	8	3-0	2	12-1½	8	3-3	10	7-8	10	8-5	42	2-4	6	9-6	4	11-1	6	10-3	4	12-3	28	4-5	4	17-1	6	15-7	20	2-0
																								42	4-5	4	23-10	6	20-4	20	2-0
50	8-8	2	18-1	10	3-0	2	14-1½	10	3-3	12	9-8	12	10-5	50	2-10	6	11-6	4	13-1	6	12-3	4	14-4	56	4-5	4	30-6	6	27-1	24	2-0
																								68	4-5	4	37-3	6	33-9	24	2-0
																								82	4-5	4	③45-10	6	③42-4	24	2-0
42	7-6½	2	11-1	8	3-0	2	12-1½	8	3-3	10	7-8	10	8-5	42	2-4	6	9-6	4	11-1	6	10-3	4	12-3	28	4-5	4	17-1	6	15-7	20	2-0
																								42	4-5	4	23-10	6	20-4	20	2-0
																								56	4-5	4	30-6	6	27-1	24	2-0
																								68	4-5	4	37-3	6	33-9	24	2-0
																								82	4-5	4	③45-10	6	③42-4	24	2-0
42	7-6½	2	11-1	8	3-0	2	12-1½	8	3-3	10	7-8	10	8-5	42	2-4	6	9-6	4	11-1	6	10-3	4	12-3	32	4-6	4	18-2	6	16-8	20	2-0
																								48	4-6	4	26-11	6	25-5	20	2-0
																								64	4-6	4	34-8	6	31-2	20	2-0
																								80	4-6	4	④44-4	6	39-0	20	2-0
																								94	4-6	4	⑤52-1	6	⑤46-7	20	2-0

① Includes One 1'-6" Lap Splice ② Incl. One 2'-2" Lap Splice ③ Does Not Include Lap Splice When Bar Length Exceeds 40'-0" Add One 2'-2" Lap Splice ④ Include One 1'-10" Lap Splice Ⓐ #6 Bars X To Be ¾" ℄ Smooth & Greased For 1'-0" of Length

REVISIONS		
DATE	DESCRIPTION	BY
1-5-18	Rev. Weep Hole Note	W.T.J.
5-30-75	Revised Spill Slope	W.T.J.
2-3-72	Rev. Specifications for Steel	W.E.M.
4-26-67	Axle Steel Added	W.E.M.

CC·S·M·6-7·R·75°-1

STANDARD PLAN
MULTIPLE OPENINGS
REINF. CONCRETE BOX CULVERT
STRAIGHT WINGS 75° CROSSING
2:1 SPILL SLOPE, NORMAL TO CHANNEL
DATED 2-4-68 GS 4' 6'×5' 7'×4'

STATE OF LOUISIANA
DEPARTMENT OF HIGHWAYS

DESIGNED W.E.M. | DETAILED C.W.J. | TRACED R.C.B. | CHECKED W.E.M. | CHECKED E.P.M. | CHECKED D.D.W. | IN CHARGE OF

INFORMATIONAL USE

IP_PWP:dms09544\CCSM6-7R75_1.dgn 4/27/2015 15:03

7/26/2018 14:19

IP_PWP:dms09544\CCSM6-8R90_1.dgn

F.A.P.	STATE PROJECT	PARISH	SHEET NO.

BILL OF REINFORCING STEEL FOR 44'-0" CULVERT

OPENINGS		BARREL														WINGS AND CURBS																											
SIZE	No.	#6 BARS A			#6 BARS A_1			#6 BARS B			#4 BARS C		#4 BARS D			#4 BARS E		#4 BARS F		#4 BARS F_1		#4 BARS J		#4 BARS M		#4 BARS N		#4 BARS O		#4 BARS P		#4 BARS P_1		#6 BARS X	
		No.	Length Ft-In.	Spa In.	No.	Length Ft-In.	Spa In.	No.	Length Ft-In.	Spa In.	No.	Length Ft-In.	No.	Length Ft-In.	Spa In.	No.	Length Ft-In.	No.	Length Ft-In.	No.	Length Ft-In.	No.	Length Ft-In.	No.	Length Ft-In.	No.	Length Ft-In.	No.	Length Ft-In.	No.	Length Ft-In.	No.	Length Ft-In.	No.	Length Ft-In.	No.	Length Ft-In.
FEET																																										
6×4	2	76	14-2	14	76	5-2	14	60	14-5½	14	46	47-2	136	5-0	12	40	7-6	4	11-3	16	3-2	20	7-8	4	16-7	28	4-11	40	2-4	12	9-6	8	11-2	20	2-0
	3	76	20-8	14	156	5-2	14	60	21-3	14	98	47-2	184	5-0	12									4	23-1	40	4-11								
	4	76	27-2	14	234	5-2	14	60	28-0½	14	90	47-2	230	5-0	12									4	29-7	54	4-11								
	5	76	33-8	14	312	5-2	14	60	34-10	14	112	47-2	276	5-0	12									4	36-1	66	4-11								
	6	76	[3]42-4	14	390	5-2	14	60	[3]43-8½	14	134	47-2	322	5-0	12									4	[3]44-1	80	4-11								
6×5	2	76	14-2	14	78	5-2	14	60	14-5½	14	49	47-2	138	6-0	12	48	8-8	4	13-3	20	3-2	24	9-8	4	16-7	28	4-11	48	2-10	12	11-6	8	13-2	24	2-0
	3	76	20-8	14	156	5-2	14	60	21-3	14	72	47-2	184	6-0	12									4	23-1	40	4-11								
	4	76	27-2	14	234	5-2	14	60	28-0½	14	96	47-2	230	6-0	12									4	29-7	54	4-11								
	5	76	33-8	14	312	5-2	14	60	34-10	14	118	47-2	276	6-0	12									4	36-1	66	4-11								
	6	76	[3]42-4	14	390	5-2	14	60	[3]43-8½	14	141	47-2	322	6-0	12									4	[3]44-1	80	4-11								
7×4	2	84	16-2	13	84	5-8	13	66	16-6	13	50	47-2	136	5-1	12	40	7-6½	4	11-3	16	3-2	20	7-8	4	18-7	32	5-0	40	2-4	12	9-6	8	11-2	20	2-0
	3	84	23-8	13	168	5-8	13	66	24-4	13	74	47-2	184	5-1	12									4	26-1	48	5-0								
	4	84	31-2	13	252	5-8	13	66	32-2	13	98	47-2	230	5-1	12									4	33-7	62	5-0								
	5	84	38-8	13	336	5-8	13	66	40-0	13	122	47-2	276	5-1	12									4	[3]42-7	78	5-0								
	6	84	[3]46-4	13	420	5-8	13	66	[3]50-0	13	146	47-2	322	5-1	12									4	[3]50-1	92	5-0								
7×5	2	84	16-2	13	84	5-8	13	66	16-6	13	53	47-2	136	6-1	12	48	8-8½	4	13-3	20	3-2	24	9-8	4	18-7	32	5-0	48	2-10	12	11-6	8	13-2	24	2-0
	3	84	23-8	13	168	5-8	13	66	24-4	13	78	47-2	184	6-1	12									4	26-1	48	5-0								
	4	84	31-2	13	252	5-8	13	66	32-2	13	103	47-2	230	6-1	12									4	33-7	62	5-0								
	5	84	38-8	13	336	5-8	13	66	40-0	13	128	47-2	276	6-1	12									4	[3]42-7	78	6-0								
	6	84	[3]46-4	13	420	5-8	13	66	[3]50-0	13	153	47-2	322	6-1	12									4	[3]50-1	96	5-0								
7×6	2	84	16-2	13	84	5-8	13	66	16-6	13	56	47-2	136	7-1	10	56	9-10½	4	15-3	24	3-2	28	11-8	4	18-7	32	5-0	56	3-4	16	13-6	12	15-2	28	2-0
	3	84	23-8	13	168	5-8	13	66	24-4	13	82	47-2	224	7-1	10									4	26-1	48	5-0								
	4	84	31-2	13	252	5-8	13	66	32-2	13	106	47-2	280	7-1	10									4	33-7	62	5-0								
	5	84	38-8	13	336	5-8	13	66	40-0	13	134	47-2	336	7-1	10									4	[3]42-7	78	5-0								
	6	84	[3]46-4	13	420	5-8	13	66	[3]50-0	13	160	47-2	392	7-1	10									4	[3]50-1	92	5-0								
8×5	2	92	18-5	12	92	6-2	12	92	18-9¼	12	57	47-2	138	6-2	12	48	8-9	4	13-4	20	3-3	24	9-8	4	20-10	36	5-1	48	2-10	12	11-6	8	13-2	24	2-0
	3	92	27-0	12	164	6-2	12	92	27-8½	12	84	47-2	184	6-2	12									4	29-5	54	5-1								
	4	92	35-7	12	276	6-2	12	92	36-7¾	12	111	47-2	230	6-2	12									4	38-0	72	5-1								
	5	92	[3]46-4	12	368	6-2	12	92	[3]47-9	12	138	47-2	276	6-2	12									4	[3]48-1	88	5-1								
	6	92	[3]54-11	12	460	6-2	12	92	[3]56-8¼	12	165	47-2	322	6-2	12									4	[3]56-8	106	5-1								
8×6	2	92	18-5	12	92	6-2	12	92	18-9¼	12	60	47-2	138	7-2	12	56	9-11	4	15-4	24	3-3	28	11-8	4	20-10	36	5-1	56	3-4	16	13-6	12	15-2	28	2-0
	3	92	27-0	12	164	6-2	12	92	27-8½	12	88	47-2	184	7-2	12									4	29-5	54	5-1								
	4	92	35-7	12	276	6-2	12	92	36-7¾	12	116	47-2	230	7-2	12									4	38-0	72	5-1								
	5	92	[3]46-4	12	368	6-2	12	92	[3]47-9	12	144	47-2	276	7-2	12									4	[3]48-1	88	5-1								
	6	92	[3]54-11	12	460	6-2	12	92	[3]56-8¼	12	172	47-2	322	7-2	12									4	[3]56-8	106	5-1								

[1] Includes One 1'-6" Lap Splice. [2] Includes One 2'-2" Lap Splice. [3] #6 Bars 'X' to be ¾" ⌀ Smooth & Greased for 1'-0" of Length.

DIMENSIONS														QUANTITIES				
OPENINGS			MAX. FILL	BARREL		WINGS AND CURBS								PER LIN FOOT OF BARREL		44'-0" CULVERT		OPENINGS
SIZE	No.	AREA	SLAB	WALL	T	N	E	J	G	H	L	P	M	STEEL	CONCRETE	STEEL	CONCRETE	No.
FEET		Sq Ft	Feet	Feet	In.	In.	Ft-In	Ft-In	Ft-In	Ft-In	Ft-In	Ft-In	Ft-In	Pounds	Cu Yds.	Pounds	Cu Yds.	
6×4	2	48	16	12	8	6	1-3	10	2-9	5-8	10-4	9-10	33-2	127.76	0.9074	6674	53.64	2
	3	72											39-8	195.32	1.3117	9760	73.20	3
	4	96	20										46-2	258.88	1.7161	12,853	92.77	4
	5	120											52-8	324.45	2.1204	15,940	112.33	5
	6	144											59-2	401.17	2.5247	19,551	131.89	6
6×5	2	60	15	12	8	6	1-5	1-2	3-3	6-8	12-4	11-10	37-2	131.76	0.9030	7072	60.02	2
	3	90											43-8	198.66	1.3858	10220	80.43	3
	4	120	20										50-2	265.56	1.8087	13,376	100.84	4
	5	150											56-8	332.46	2.2315	16,324	121.26	5
	6	180											63-2	410.52	2.6544	20,196	141.67	6
7×4	2	56	12	12	8½	6	1-3	10	2-9	5-8½	10-4	9-10	35-2	149.88	1.0540	7713	60.69	2
	3	84											42-8	227.54	1.5309	11,372	83.72	3
	4	112	16										50-2	305.20	2.0077	15,024	109.75	4
	5	140											57-8	382.86	2.4846	18,687	129.76	5
	6	168											65-2	472.54	2.9614	22,692	152.80	6
7×5	2	70	12	12	8½	6	1-5	1-2	3-3	6-8½	12-4	11-10	39-2	153.69	1.1096	8111	67.07	2
	3	105											46-8	232.88	1.6049	11,832	90.95	3
	4	140	16										54-2	311.58	2.1003	15,546	114.83	4
	5	175											61-8	390.88	2.5957	19,272	136.71	5
	6	210											69-2	481.69	3.0910	23,530	162.59	6
7×6	2	84	11	12	8½	6	1-7	1-6	3-9	7-8½	14-4	13-10	43-2	190.74	1.1651	8,756	74.07	2
	3	126											50-2	242.02	1.6790	12,566	98.80	3
	4	168	16										58-2	325.29	2.1929	16,410	123.53	4
	5	210											65-8	404.57	2.7068	20,245	148.27	5
	6	252											73-2	497.86	3.2207	24,622	173.00	6
8×5	2	80	10	12	9	7	1-5	1-2	3-3	6-9	12-5	11-10	41-5	180.67	1.3267	9873	77.46	2
	3	120											50-0	273.96	1.9226	13,771	108.05	3
	4	160	14										58-7	367.30	2.5170	18,165	134.61	4
	5	200											67-2	473.03	3.1111	23,162	163.17	5
	6	240											75-9	566.94	3.7053	27,558	191.73	6
8×6	2	96	9	12	9	7	1-7	1-6	3-9	7-9	14-5	13-10	45-8	184.66	1.3935	9,677	84.92	2
	3	144											54-0	279.33	2.0092	14,566	114.47	3
	4	192	13										62-7	373.96	2.6250	18,766	144.03	4
	5	240											71-2	481.64	3.2407	23,652	173.59	5
	6	288											79-8	576.29	3.8565	28,312	203.14	6

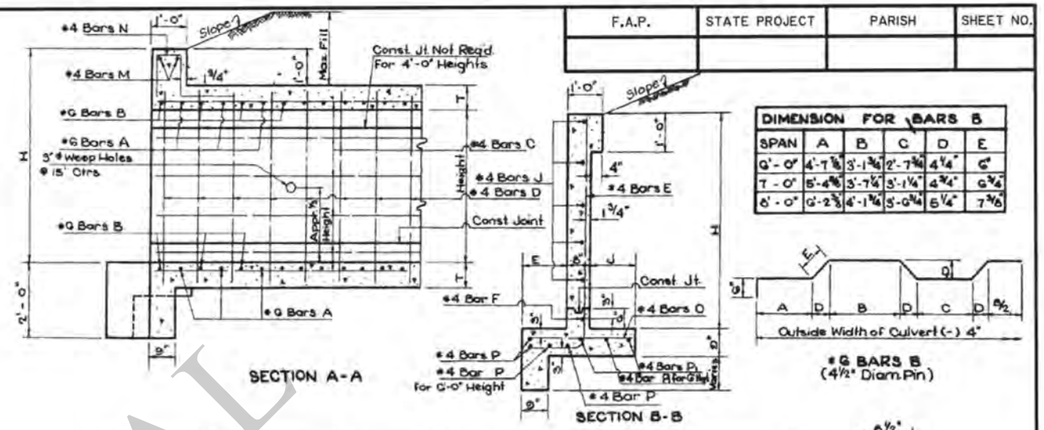

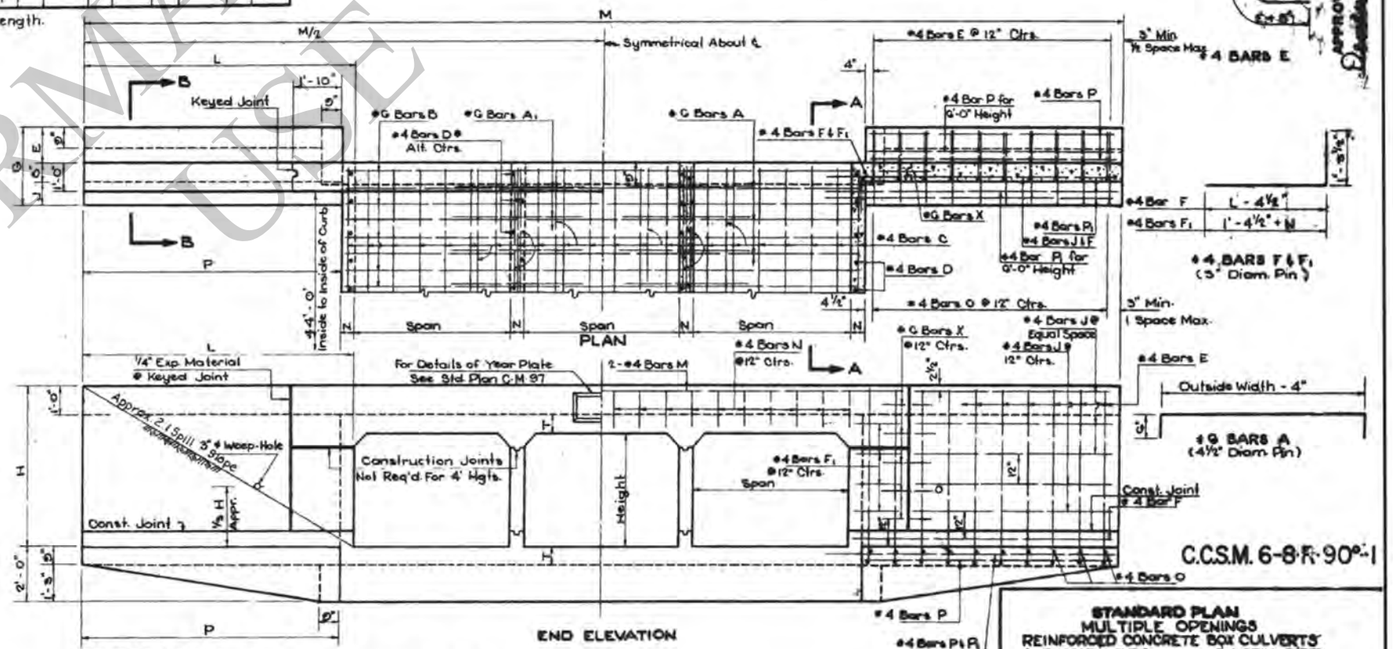

GENERAL NOTES:
Construction Specifications: Latest Approved La. Dept of Highways Standard Specifications.
Design Specifications: A.A.S.H.O. 1961 as amended by Int. Spec. 1964
Live Load H S 20-44 or Military Loading, whichever is greater.
All Concrete to be Class 'A'.
All Exposed Corners to Have ¾" Chamfer, Unless Otherwise Noted.
Reinforcement Shall be Billet A.S.T.M. A 615 or Rail Steel A.S.T.M. A 616 or Axle Steel A.S.T.M. A 617
Dimensions Relating to Reinforcing Steel are to Bar Centers.
A 1'-6" Square of Plastic Filter Cloth (See Qualified Products List) Shall be placed in contact with Concrete behind each Weep Hole, in addition to approx. 2 Cu. Ft. of Concrete Sand.
For Detail of Joints, See Std. Plan C.M.-48.

STANDARD PLAN
MULTIPLE OPENINGS
REINFORCED CONCRETE BOX CULVERTS
STRAIGHT WINGS 2:1 SPILL SLOPE
6×4, 6×5, 7×4, 7×5, 7×6, 8×5 & 8×6

DATED July 1, 1964

APPROVED BY: Chief Engineer DATE 1-22-64

REVISIONS			
1- 10-64	Rev. W.S.& Slope, Keyed Jt.	W.M.H.	
2- 6-65	Rev. Slope & Notes	W.M.H.	
3- 6-65	Rev. Dimensions & Notes to Bars	W.M.H.	
4- 8-67	Added Axle Steel	W.M.H.	
5- 12-68	Rev. Concrete Stress	W.M.H.	
DATE	DESCRIPTION	BY	

STATE OF LOUISIANA
DEPARTMENT OF HIGHWAYS

DESIGNED W.E. Morrison	APPROVED Stark J. Ruffo	TRACED Lou Bishop
CHECKED W.E. Brown	CHECKED L. Brownell	CHECKED W.E. Morrison

IN CHARGE OF

INFORMATIONAL USE

F.A.P.	STATE PROJECT	PARISH	SHEET NO.

5/21/2018 08:50

SECTION B-B

SECTION C-C

PLAN

END ELEVATION

SECTION THRU BARREL

SECTION A-A

6 BARS B

DIMENSION FOR BARS B							
Span	Dim. Pin	A	B	C	D	E
7'-0"	4½"	5'-4⅝"	5'-7¼"	3'-1⅛"	4 ¾"	6 ¾"
8'-0"	4½"	6'-2⅝"	4'-1¾"	3'-6¾"	5¼"	7 ⅞"

DIMENSIONS																QUANTITIES			
OPENINGS			MAX. FILL		BARREL		WINGS AND CURBS									PER LIN. FT. OF BARREL		60'-0" CULVERT	
SIZE	№	AREA	SLABS	WALLS	T	N	E	J	G	H	L	L_1	P	P_1	M	STEEL	CONCRETE	STEEL	CONCRETE
Feet		Sq. Ft	Feet	Feet	In.	In.	Ft.-In.	Ft.-In.	Ft.-In.	Ft.-In.	Ft.-In.	Ft.-In.	Ft.-In.	Ft.-In.	Ft.-In.	Pounds	Cu. Yds.	Pounds	Cu. Yds.
7x5	2	70	12												50-8½	153.89	1.1096	11104	89.63
	3	105													61-4½	232.85	1.6040	16637	122.30
	4	140	16	7	8½	6	1-5	1-2	3-3	6-8½	12-8½	17-6½	12-0	16-10	71-1½	311.84	2.1003	22295	154.97
	5	175													80-6½	390.86	2.8957	28225	187.64
	6	210													90-8½	461.89	3.0010	34724	220.31
7x6	2	84	11												55-8½	160.74	1.1681	12020	86.56
	3	126													66-3½	242.02	1.6700	17610	132.80
	4	168	16	5	8½	6	1-7	1-6	3-9	7-8½	14-8½	20-5½	14-0	19- 9	76-10½	323.25	2.1929	23416	166.92
	5	210													87-5½	404.57	2.7065	29487	200.06
	6	252													96-1½	497.86	3.2707	35135	233.89
8x5	2	80	10												53-11½	160.67	1.3287	12058	103.86
	3	120													66-0½	273.06	1.9228	19580	142.93
	4	160	14	9	9	7	1-5	1-2	3-3	6-9	12-9⅞	17-7⅞	12-0	16-10	78-6½	367.30	2.5170	26203	182.00
	5	200													90-4½	473.63	3.1111	33717	221.07
	6	240													102-5½	566.04	3.7053	41227	260.14
8x6	2	96	9												56 9½	184.68	1.3955	13576	113.33
	3	144													70-10½	279.33	2.0092	20114	153.75
	4	192	13	5	9	7	1-7	1-6	3-9	7-9	14-9⅞	20-5⅞	14-0	19- 8	83-0½	373.96	2.6250	27003	194.18
	5	240													95-1½	461.64	3.2407	34612	234.61
	6	288													107-5½	576.20	3.8565	42207	275.04

BILL OF REINFORCING STEEL FOR 60'-0" CULVERT

BARREL REINFORCEMENT

OPENING		#G BARS A		#G BARS A_1		#G BARS A_2			#G BARS D		#4 BARS C		#4 BARS D	
Size	№	№	Length	Spac.	№	Length	Spac.	№	Short Bar	Var.	Long Bar	Spac.	№	Length	Spac.	№	Length	Spac.	№	Length
Feet			Ft.-In.	In.		Ft.-In.	In.		Ft.-In.	In.	Ft.-In.	In.		Ft.-In.			Ft.-In.			Ft.-In.
7x5	2	86	16-2	13	122	5-8	⑤13	104	2-1	G.4500	15-7	G½	88	16-6	13	53	G3-10	189	G-1	12
	3	74	23-8	13	908	5-8	⑤13	156	2-1	G.5000	22-8	G½	76	24-4	13	76	G3-10	252	G-1	12
	4	60	31-2	13	448	5-8	⑤13	219	2-1	G.5000	30-3	G½	60	32-0	13	103	G3-10	315	G-1	12
	5	46	38-8	13	656	5-8	⑤13	263	2-1	G.5000	37-10	G½	46	40-0	13	128	G3-10	378	G-1	12
	6	32	②48-4	13	892	5-8	⑤13	324	2-1	G.5000	④5-5	G½	32	④50-0	13	153	G3-10	441	G-1	12
7x6	2	86	16-2	13	122	5-8	⑤13	104	2-1	G.6800	15-7	G½	88	16-6	13	50	G3-10	226	7-1	10
	3	74	23-8	13	908	5-8	⑤13	156	2-1	G.6800	22-8	G½	76	24-4	13	82	G3-10	304	7-1	10
	4	60	31-2	13	448	5-8	⑤13	219	2-1	G.5000	30-3	G½	60	32-0	13	100	G3-10	380	7-1	10
	5	46	38-8	13	656	5-8	⑤13	263	2-1	G.5000	37-10	G½	46	40-0	13	134	G3-10	454	7-1	10
	6	32	②48-4	13	892	5-8	⑤13	324	2-1	G.5000	④5-5	G½	32	④50-0	13	160	G3-10	530	7-1	10
8x5	2	90	18-5	12	134	G-2	⑥12	108	2-2	G.0000	17-8	G	90	18-5	12	57	G3-10	169	G-2	12
	3	72	27-0	12	500	G-2	⑥12	196	2-2	G.0000	26-9	G	74	27-8½	12	84	G3-10	252	G-2	12
	4	56	35-7	12	584	G-2	⑥12	264	2-2	G.0000	34-6	G	58	36-7½	12	111	G3-10	315	G-2	12
	5	40	②46-4	12	744	G-2	⑥12	332	2-2	G.0000	④3-3	G	40	④47-5	12	138	G3-10	378	G-2	12
	6	20	②54-11	12	1020	G-2	⑥12	404	2-2	G.0000	④52-1	G	22	④56-8½	12	165	G3-10	441	G-2	12
8x6	2	90	18-5	12	134	G-2	⑥12	128	2-2	G.0000	17-8	G	90	18-5	12	60	G3-10	169	7-2	12
	3	72	27-0	12	500	G-2	⑥12	196	2-2	G.0000	26-9	G	74	27-8½	12	88	G3-10	252	7-2	12
	4	56	35-7	12	584	G-2	⑥12	264	2-2	G.0000	34-6	G	58	36-7½	12	116	G3-10	315	7-2	12
	5	40	②46-4	12	744	G-2	⑥12	332	2-2	G.0000	④3-3	G	40	④47-5	12	144	G3-10	378	7-2	12
	6	20	②54-11	12	1020	G-2	⑥12	404	2-2	G.0000	④52-1	G	22	④56-8½	12	172	G3-10	441	7-2	12

CURBS AND WINGS REINFORCEMENT

OPENING		#4 BARS E		#4 BARS F		#4 BARS F_1		#4 BARS F_2		#4 BARS F_3		#4 BARS J		#4 BARS O		#4 BARS P		#4 BARS P_1		#4 BARS P_2		#4 BARS P_3		#4 BARS N		#G BARS M		#G BARS M_1		#G BARS X	
Size	№	№	Length	№	Length	№	Length	№	Length	№	Length	№	Length	№	Length	№	Length	№	Length	№	Length	№	Length	№	Length	№	Length	№	Length	№	Length
Feet			Ft.-In.		Ft.-In.		Ft.-In.		Ft.-In.		Ft.-In.		Ft.-In.		Ft.-In.		Ft.-In.		Ft.-In.		Ft.-In.		Ft.-In.		Ft.-In.		Ft.-In.		Ft.-In.		Ft.-In.
7x5	2	58	8-8½	2	13-0	10	3-2	2	18-10	10	3-9	12	9-5	12	14-8	58	2-10	6	11-8	4	12-10	6	16-6	4	19- 9	44	4-6	4	95- 5	6	21- 5	24	2-0
																										64	4-6	4	36- 1	6	32- 0	24	2-0
																										86	4-6	4	@48-10	6	@44-10	24	2-0
																										106	4-6	4	@50- 5	6	@55- 5	24	2-0
																										126	4-6	4	@70- 0	6	@66- 0	24	2-0
7x6	2	68	9-10½	2	15-0	12	3-2	2	21- 9	12	3-9	14	11-5	14	17-7	68	3- 4	8	13-8	6	14-10	8	19-5	6	23- 0	44	4-6	4	95- 5	6	21- 5	28	2-0
																										64	4-6	4	36- 1	6	32- 0	28	2-0
																										86	4-6	4	@48-10	6	@44-10	28	2-0
																										106	4-6	4	@50- 5	6	@55- 5	28	2-0
																										126	4-6	4	@70- 0	6	@66- 0	28	2-0
8x5	2	58	8- 9	2	13-2	10	3-3½	2	19- 0	10	3-10½	12	9-5	12	14-8	58	2-10	6	11-8	4	12-10	6	16-6	4	19- 9	50	4-7	4	28- 8	6	24- 7	24	2-0
																										76	4-7	4	@42-11	6	36- 9	24	2-0
																										98	4-7	4	@55- 1	6	@51- 1	24	2-0
																										122	4-7	4	@67- 2	6	@63- 2	24	2-0
																										146	4-7	4	@70- 4	6	@75- 4	24	2-0
8x6	2	68	9-11	2	15-2	12	3-3½	2	21-10	12	3-10½	14	11-5	14	17-6	68	3- 4	8	13-8	6	14-10	8	19-4	6	22-11	50	4-7	4	28- 8	6	24- 7	28	2-0
																										76	4-7	4	@42-11	6	36- 9	28	2-0
																										98	4-7	4	@55- 1	6	@51- 1	28	2-0
																										122	4-7	4	@67- 2	6	@63- 2	28	2-0
																										146	4-7	4	@70- 4	6	@75- 4	28	2-0

① Includes one 1'-6" Lap Splice ② Includes one 2'-2" Lap Splice ③ Does not Include Lap Splice. When Bar length exceeds 40'-0" add one 2'-2" Lap Splice. ④ #G Bars X to be ¾" ϕ Smooth and Greased For 1'-0" Length

GENERAL NOTES:

CONSTRUCTION SPECIFICATIONS: Latest Approved La. Dept. of Hwy. Standard Specifications.
DESIGN SPECIFICATIONS: A.A.S.H.O. 1961 as amended by INT. SPECIFICATIONS 1964.
LIVE LOAD: HS 20-44 or Military; Whichever is Greater.
All Concrete to be Class "A".
All Exposed Corners to have ¾" Chamfer, Unless Otherwise Noted.
Reinforcement Bars shall be Billet-Steel A.S.T.M. A615 or Rail-Steel A.S.T.M. A616 or Axle-Steel A.S.T.M. A617.
Dimensions Relating to Reinforcing Steel are to Bar Centers.
A 1'-6" Square of Plastic Filter Cloth (See Qualified Products List) Shall be Placed in contact with Concrete behind each Weep Hole, in addition to approx. 2 Cu. Ft. of Concrete Sand.
For Detail of Joints, See Std. Plan C.M. - 49.

STANDARD PLAN
MULTIPLE OPENINGS
REINFORCED CONCRETE BOX CULVERT
STRAIGHT WINGS 45° SKEW
2:1 SPILL SLOPE NORMAL TO CHANNEL
7'X5' 7'X6' 8'X5' 8'X6'

DATED JANUARY 20, 1966

APPROVED BY: Thomas D. Wallace — CHIEF ENGINEER — 1-11-28 DATE

CG-S-M-7-8-R-45²

STATE OF LOUISIANA
DEPARTMENT OF HIGHWAYS

DESIGNED W.E.M.	DETAILED EARL MARTEL	TRACED T. WILLIAMS
CHECKED N.K.B.	CHECKED W.E. MARCUM	CHECKED W.E. Marcum
IN CHARGE OF		

DATE	DESCRIPTION	BY
1-11-28	Rev. Weep Hole Note	W.T.J.
5-30-29	Revised Spill Slope	W.T.J.
6-8-32	Rev. Gen. Notes For Steel	W.E.M.
5-2-61	Added Axle Steel	W.E.M.

REVISIONS

IP_PWP:dms09544\CCSM7-8R45_1.dgn

FOR INFORMATION ONLY

F.A.P.	STATE PROJECT	PARISH	SHEET NO.

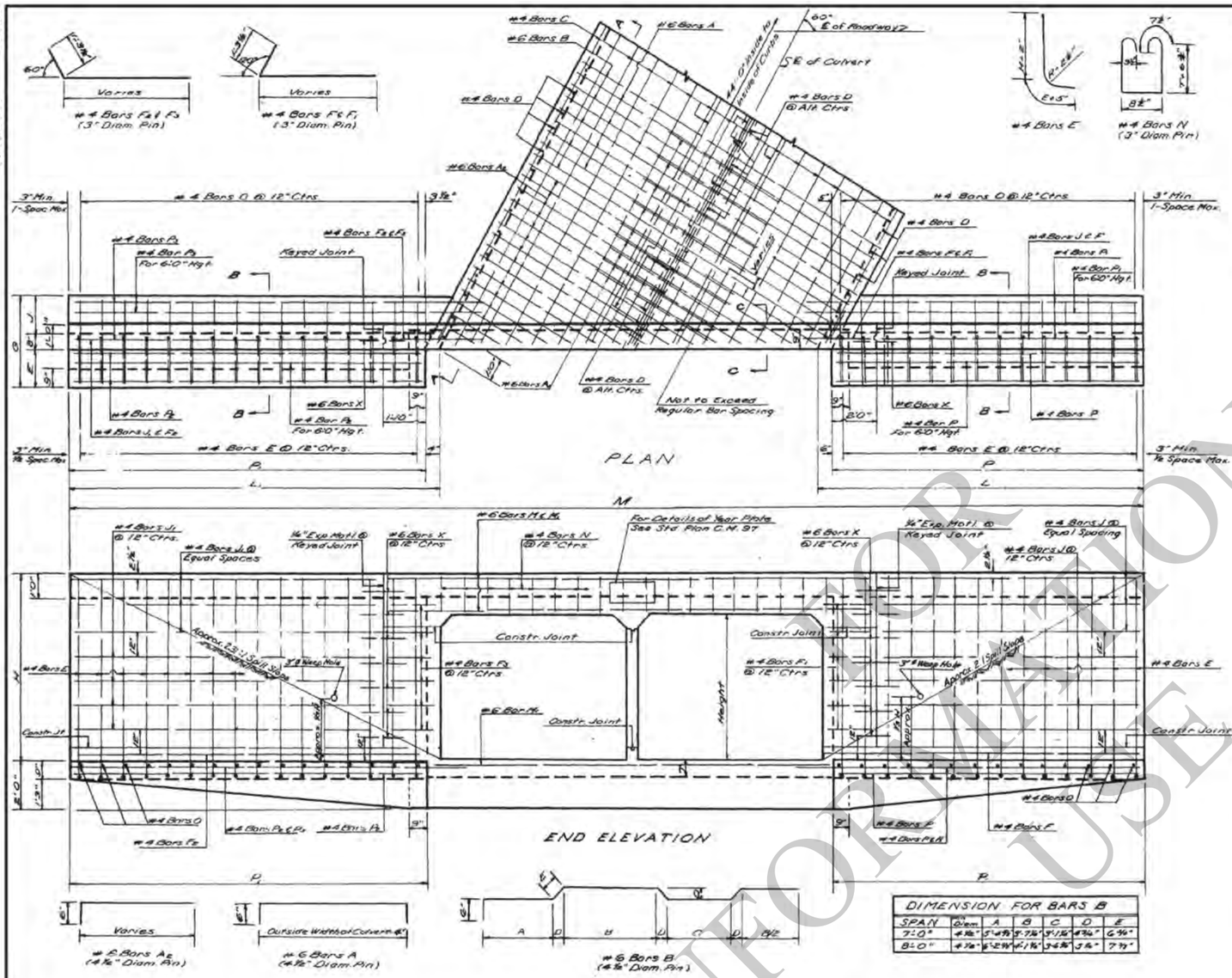

DIMENSIONS

OPENINGS SIZE FEET	NO.	AREA SQ. FT.	MAX. FILL SLAB FEET	MAX. FILL WALL FEET	BARREL T IN.	BARREL N IN.	WINGS AND CURBS E FT-IN	J FT-IN	G FT-IN	H FT-IN	L FT-IN	L1 FT-IN	P FT-IN	P1 FT-IN	M FT-IN	QUANTITIES PER LIN. FT. OF BARREL STEEL LBS.	CONC. CU. YDS.	44'-0" CULVERT (ALONG ℄) STEEL LBS.	CONC. CU. YDS.	OPENINGS NO.	OPENINGS SIZE FEET
7'x5'	2	70	12												13'-3 3/8"	153.89	1.1096	8,461	68.06	2	7'x5'
	3	105													32'-1 1/4"	292.89	1.6049	12,468	93.06	3	
	4	140	16	7	8 1/2	6	1'-5	1'-2	3'-3	6'-8 1/2"	12'-4 1/8"	14'-3 1/8"	11'-10	13'-9	60'-9 1/8"	311.88	2.1003	16,587	113.26	4	
	5	175													69'-3 1/8"	390.88	2.3957	20,816	141.47	5	
	6	210													78'-1 1/8"	481.89	3.0310	25,583	165.61	6	
7'x6'	2	84	11												47'-6 3/8"	160.74	1.1651	9,122	76.07	2	7'x6'
	3	126													56'-2 1/8"	242.02	1.6790	13,234	101.14	3	
	4	168	16	5	8 1/2	6	1'-7	1'-6	3'-9	7'-8 1/2"	14'-4 1/8"	16'-4 1/8"	13'-10	15'-10	64'-10 1/8"	323.23	2.1929	17,404	126.20	4	
	5	210													73'-6 1/8"	404.57	2.7068	21,868	151.26	5	
	6	252													82'-2 1/8"	497.86	3.2207	26,683	176.32	6	
8'x5'	2	80	10												46'-0 1/8"	180.67	1.3287	9,754	79.39	2	8'x5'
	3	120													55'-1 3/8"	273.96	1.9228	14,476	108.33	3	
	4	160	14	5	8	7	1'-5	1'-2	3'-3	6'-9	12'-6 1/2"	14'-5 1/2"	11'-10	13'-9	65'-10 1/2"	367.30	2.5170	19,407	137.86	4	
	5	200													75'-3 3/8"	473.63	3.1111	24,857	166.80	5	
	6	240													85'-8 1/8"	574.94	3.7059	30,800	195.13	6	
8'x6'	2	96	9												52'-1 5/8"	184.68	1.3935	10,293	87.04	2	8'x6'
	3	144													60'-0 3/8"	279.33	2.0092	15,057	116.98	3	
	4	192	13	5	9	7	1'-7	1'-6	3'-9	7'-9	14'-6 1/2"	16'-6 1/2"	13'-10	15'-10	69'-11 1/2"	373.98	2.6250	20,051	146.92	4	
	5	240													78'-10 3/8"	481.64	3.2401	25,364	176.85	5	
	6	288													88'-3 1/8"	576.29	3.8565	30,969	206.79	6	

BILL OF REINFORCING STEEL FOR 44'-0" CULVERT

BARREL REINFORCEMENT

OPENINGS SIZE FEET	No.	#6 BARS A NO.	#6 BARS A LENGTH FT-IN	#6 BARS A Spc. IN	#6 BARS A1 NO.	#6 BARS A1 LENGTH FT-IN	#6 BARS A1 Spc. IN	#6 BARS A2 NO.	#6 BARS A2 LENGTH UNDRP BAR FT-IN	#6 BARS A2 Van FT-IN	#6 BARS A2 LONG BAR FT-IN	#6 BARS A2 Spc. IN	#6 BARS B NO.	#6 BARS B LENGTH FT-IN	#6 BARS B Spc. IN	#4 BARS C NO.	#4 BARS C LENGTH FT-IN	#4 BARS D NO.	#4 BARS D LENGTH FT-IN	#4 BARS D Spc. IN
7'x5'	2	68	16'-2	13	88	5'-8	6 1/2	60	2'-3	11 2143	13'-4	6 1/2	70	16'-6	13	53	47'-5	138	6'-1	12
	3	60	23'-8	13	132	5'-8	6 1/2	52	2'-3	11 2213	22'-10	6 1/2	62	24'-4	13	78	47'-5	184	6'-1	12
	4	52	31'-2	13	176	5'-8	6 1/2	104	2'-3	11 2333	30'-4	6 1/2	54	32'-2	13	103	47'-5	230	6'-1	12
	5	44	38'-8	13	220	5'-8	6 1/2	156	2'-3	11 2346	37'-10	6 1/2	46	40'-0	13	128	47'-5	276	6'-1	12
	6	36	②48'-4	13	264	5'-8	6 1/2	188	2'-3	11 2391	②45'-4	6 1/2	38	③50'-0	13	153	47'-5	322	6'-1	12
7'x6'	2	80	16'-2	13	88	5'-8	6 1/2	60	2'-3	11 2143	15'-4	6 1/2	70	16'-6	13	58	47'-5	148	7'-1	10
	3	60	23'-8	13	132	5'-8	6 1/2	52	2'-3	11 2213	22'-10	6 1/2	62	24'-4	13	88	47'-5	204	7'-1	10
	4	120	31'-2	13	176	5'-8	6 1/2	104	2'-3	11 2333	30'-4	6 1/2	54	32'-2	13	118	47'-5	260	7'-1	10
	5	44	38'-8	13	220	5'-8	6 1/2	156	2'-3	11 2346	37'-10	6 1/2	46	40'-0	13	134	47'-5	316	7'-1	10
	6	36	②48'-4	13	264	5'-8	6 1/2	188	2'-3	11 2391	②45'-4	6 1/2	38	③50'-0	13	160	47'-5	372	7'-1	10
8'x5'	2	90	18'-5	12	98	6'-2	6 1/2	76	2'-4	10 3689	17'-11	6	72	18'-9 1/2	12	57	47'-5	138	6'-2	12
	3	62	27'-0	12	146	6'-2	6 1/2	112	2'-4	10 3704	25'-8	6	64	27'-0 1/2	12	84	47'-5	194	6'-2	12
	4	34	35'-7	12	194	6'-2	6 1/2	152	2'-4	10 3783	34'-4	6	56	36'-7 1/2	12	111	47'-5	250	6'-2	12
	5	46	②46'-4	12	244	6'-2	6 1/2	196	2'-4	10 3830	②43'-0	6	48	③47'-9	12	139	47'-5	306	6'-2	12
	6	32	②54'-11	12	290	6'-2	6 1/2	232	2'-4	10 3862	②51'-8	6	34	③55'-0 1/2	12	165	47'-5	362	6'-2	12
8'x6'	2	70	18'-5	12	98	6'-2	6 1/2	76	2'-4	10 3689	17'-11	6	72	18'-9 1/2	12	60	47'-5	138	7'-2	12
	3	66	27'-0	12	146	6'-2	6 1/2	112	2'-4	10 3704	25'-8	6	64	27'-0 1/2	12	88	47'-5	194	7'-2	12
	4	52	35'-7	12	194	6'-2	6 1/2	152	2'-4	10 3783	34'-4	6	56	36'-7 1/2	12	116	47'-5	250	7'-2	12
	5	42	②46'-4	12	244	6'-2	6 1/2	196	2'-4	10 3830	②43'-0	6	44	③47'-9	12	144	47'-5	306	7'-2	12
	6	34	②54'-11	12	290	6'-2	6 1/2	232	2'-4	10 3862	②51'-8	6	34	③55'-0 1/2	12	172	47'-5	362	7'-2	12

WINGS AND CURBS REINFORCEMENT

OPENINGS SIZE FEET	No.	#6 BARS E NO.	#6 BARS E LENGTH FT-IN	#4 BARS F NO.	#4 BARS F LENGTH FT-IN	#4 BARS F1 NO.	#4 BARS F1 LENGTH FT-IN	#4 BARS F2 NO.	#4 BARS F2 LENGTH FT-IN	#4 BARS F3 NO.	#4 BARS F3 LENGTH FT-IN	#4 BARS J NO.	#4 BARS J LENGTH FT-IN	#4 BARS J1 NO.	#4 BARS J1 LENGTH FT-IN	#4 BARS O NO.	#4 BARS O LENGTH FT-IN	#4 BARS P NO.	#4 BARS P LENGTH FT-IN	#4 BARS P4 NO.	#4 BARS P4 LENGTH FT-IN	#4 BARS P5 NO.	#4 BARS P5 LENGTH FT-IN	#4 BARS N NO.	#4 BARS N LENGTH FT-IN	#6 BARS M NO.	#6 BARS M LENGTH FT-IN	#6 BARS M1 NO.	#6 BARS M1 LENGTH FT-IN	#6 BARS X NO.	#6 BARS X LENGTH FT-IN
7'x5'	2	52	8'-8 1/2"	2	13'-0	10	3'-1	2	13'-6	10	3'-6	12	3'-6	12	11'-7	32	2'-10	6	11'-6	4	12'-11	6	13'-5	4	16'-0	36	4'-6	4	21'-2	6	17'-6
	3																									54	4'-6	4	29'-10	6	26'-2
	4																									70	4'-6	4	38'-6	6	34'-10
	5																									88	4'-6	4	②49'-6	6	②45'-8
	6																									106	4'-6	4	③50'-0	6	③54'-4
7'x6'	2	60	9'-10 1/2"	2	15'-0	12	3'-1	2	17'-7	12	3'-6	14	11'-6	14	13'-8	60	3'-4	8	13'-6	6	14'-11	8	15'-6	6	18'-3	36	4'-6	4	21'-2	6	17'-6
	3																									54	4'-6	4	29'-10	6	26'-2
	4																									70	4'-6	4	38'-6	6	34'-10
	5																									88	4'-6	4	②49'-6	6	②45'-8
	6																									106	4'-6	4	③50'-0	6	③54'-4
8'x5'	2	52	8'-8 1/2"	2	13'-0	10	3'-2	2	15'-7	10	3'-7	12	9'-6	12	11'-7	52	2'-10	6	11'-6	4	12'-11	6	13'-5	4	16'-0	40	4'-7	4	23'-9	6	20'-2
	3																									60	4'-7	4	33'-8	6	30'-0
	4																									80	4'-7	4	②45'-9	6	39'-11
	5																									100	4'-7	4	③55'-8	6	③52'-0
	6																									120	4'-7	4	③65'-7	6	③61'-11
8'x6'	2	60	9'-11	2	15'-1	12	3'-2	2	17'-8	12	3'-7	14	11'-6	14	13'-8	60	3'-4	8	13'-6	6	14'-11	8	15'-6	6	18'-3	40	4'-7	4	23'-9	6	20'-2
	3																									60	4'-7	4	33'-8	6	30'-0
	4																									80	4'-7	4	②45'-9	6	39'-11
	5																									100	4'-7	4	③55'-8	6	③52'-0
	6																									120	4'-7	4	③65'-7	6	③61'-11

② INCLUDES ONE 1'-6" LAP SPLICE. ② INCLUDES ONE 2'-6" LAP SPLICE. ③ DOES NOT INCLUDE LAP SPLICE, WHEN LENGTH OF BAR EXCEEDS 40'-0", ADD 2'-6" LAP SPLICE. Ⓐ #6 BARS "X" TO BE 3/4" Ø SMOOTH AND GREASED FOR 1'-10" OF LENGTH.

GENERAL NOTES:

CONSTRUCTION SPECIFICATIONS: LATEST APPROVED LA. DEPT OF HIGHWAYS STANDARD SPECIFICATIONS.
DESIGN SPECIFICATIONS: A.A.S.H.O. 1961 AS AMENDED BY INT. SPEC. 1964
LIVE LOAD: H.S. 20-44 OR MILITARY, WHICHEVER IS GREATER.
ALL CONCRETE TO BE CLASS "A".
ALL EXPOSED CORNERS TO HAVE 3/4" CHAMFER, UNLESS OTHERWISE NOTED.
REINFORCEMENT SHALL BE BILLET STEEL, A.S.T.M. A-615
OR RAIL STEEL A.S.T.M. A-616 OR AXLE STEEL A.S.T.M. A-617.
DIMENSIONS RELATING TO REINFORCING STEEL ARE TO BAR CENTERS.
A 1'-6" Square of Plastic Filter Cloth (See Qualified Products List) shall be placed in contact with the rate bottom of each Weep Hole, in addition to approx. 2 Cu. Ft. of Concrete Sand.
For Detail of Joints, See Std. Plan C.M.-48.

APPROVED BY:
Dempsey D. Stelly 1-5-78
CHIEF ENGINEER DATE

CC-S-M-7-8-R-60°-I

STANDARD PLAN
MULTIPLE OPENINGS
REINFORCED CONCRETE BOX CULVERT
STRAIGHT WINGS 60° CROSSING
7'x5' 7'x6' 8'x5' 8'x6'

DATED May 26, 1965

NO.	DESCRIPTION	BY
1-5-78	Rev. Weep Hole Note	W.T.J.
2-20-75	Rev. Slope Intercept	R.T.J.
6-8-72	Rev. Gen. Notes For Steel	W.E.M.
9-2-21	Added A-16 Sheet	W.E.M.

REVISIONS

STATE OF LOUISIANA
DEPARTMENT OF HIGHWAYS

DESIGNED Marcum	DETAILED E. Martel	TRACED J. Durnin
CHECKED Brown	CHECKED Brown	CHECKED A.F. Berg
IN CHARGE OF		

FOR INFORMATIONAL USE

9/5/2018 11:22
IP_PWP:dms09544\CCSM7-8R60_1.dgn

F.A.P.	STATE PROJECT	PARISH	SHEET NO.

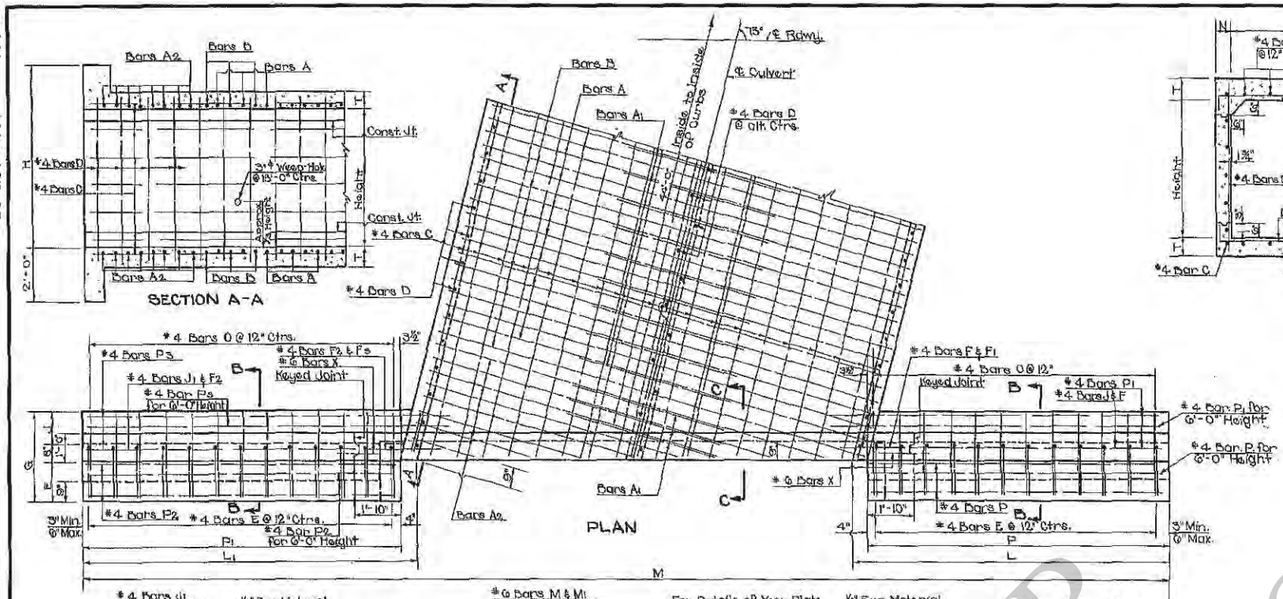

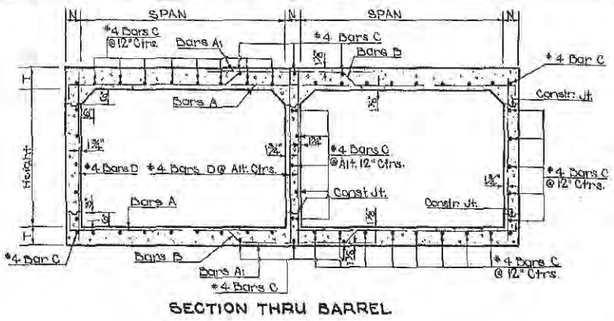

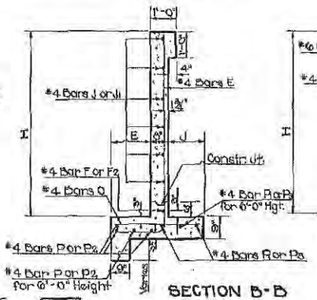

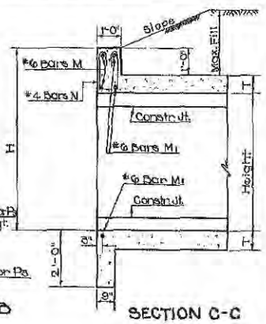

DIMENSIONS FOR BARS B						
Span	Pin Diam.	A	B	C	D	E
1'-0"	4½"	5'-4⅝"	3'-1⅛"	3'-1¼"	4⅜"	6¾"
0'-0"	4½"	0'-2⅝"	4'-1⅜"	3'-0⅜"	6⅝"	7⅜"

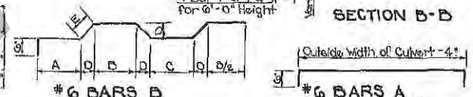

DIMENSIONS																		QUANTITIES					OPENINGS
OPENINGS			MAT'L FILL		BARREL		WINGS AND CURBS											PER LIN. FT. OF BARREL		44'-0" CULVERT (ALONG ℄)			
SIZE	NO.	AREA	SLAB	WALL	T	N	E	J	G	H	L	L1	P	P1	M	STEEL	CONC.	STEEL	CONC.		SIZE
FEET		SQ. FT.	FEET	FEET	IN.	IN.	FT.-IN.	FT.-IN.	FT.-IN.	FT.-IN.	FT.-IN.	FT.-IN.	FT.-IN.	FT.-IN.	FT.-IN.	LBS.	CU. YDS.	LBS.	CU. YDS.	NO.	FEET
7x5	2	70	12												40-5⅝	155.89	1.1030	6,356	67.66	2	7x5
	3	105													46-2¾	232.89	1.6049	12,264	91.61	3	
	4	140	18	7	6½	6	1-5	1-2	3-3	6-6½	12-4¾	13-1¼	11-10	12-7	55-11⅝	311.66	2.1003	16,142	115.56	4	
	5	175													65-9⅛	390.66	2.5957	20,196	139.81	5	
	6	210													71-6¼	481.89	3.0910	24,774	163.46	6	
7x6	2	84	11												44-5⅝	160.74	1.1651	9,009	74.72	2	7x6
	3	126													52-2¾	242.02	1.6190	13,014	99.53	3	
	4	168	16	8	6½	6	1-7	1-6	3-9	7-8½	14-4¾	15-1¼	13-10	14-7	59-11⅝	323.29	2.1929	16949	124.34	4	
	5	210													67-9⅛	404.87	2.7006	21,175	149.14	5	
	6	252													75-6¼	487.06	3.2207	25,863	178.85	6	
8x5	2	80	10												42-9½	160.67	1.3267	9,864	76.10	2	8x5
	3	120													51-6⅜	275.96	1.9228	14,240	106.75	3	
	4	160	14	9	9	7	1-5	1-2	3-3	6-9	12-5¾	13-2¼	11-10	12-7	60-0⅜	367.30	2.5170	18,954	135.99	4	
	5	200													68-5⅝	473.63	3.1111	24,079	164.04	5	
	6	240													76-4⅞	566.94	3.7053	29,028	192.09	6	
8x6	2	96	9												48-9¼	184.66	1.5935	10,194	85.60	2	8x6
	3	144													56-6⅜	279.33	2.0092	14,620	118.24	3	
	4	192	13	8	9	7	1-7	1-6	3-9	7-9	14-8¾	15-2¼	13-10	14-7	64-0¾	373.83	2.6250	18,857	144.66	4	
	5	240													73-5⅛	481.64	3.2407	24,775	174.83	5	
	6	288													82-4½	576.29	3.8565	29,767	204.17	6	

BILL OF REINFORCING STEEL FOR 44'-0" CULVERT

| OPENINGS | BARREL REINFORCEMENT | | | | | | | | | | | | | | | | | | | | | | | | | | | | WINGS AND CURBS REINFORCEMENT | | | | | | | | | | | | | | | | | | |

28-NOV-2007 09:56

R:\Standard Plans\English\Old Sheets\CCSM7-10S45 1.dgm

F.A.P.	STATE PROJECT	PARISH	SHEET NO.

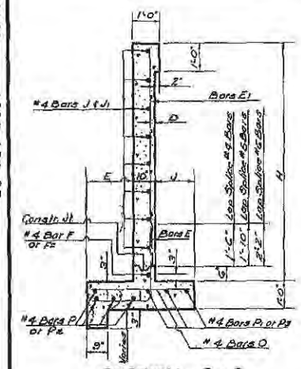

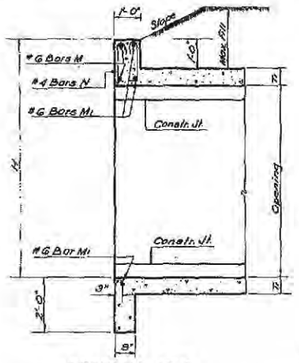

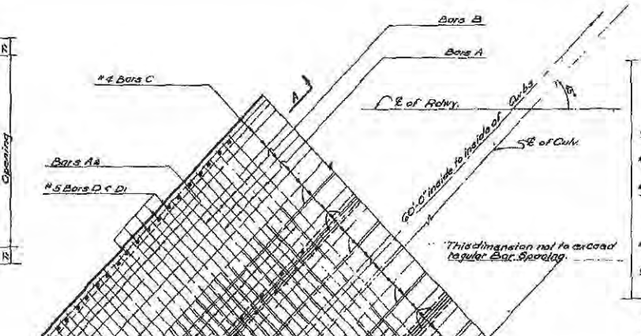

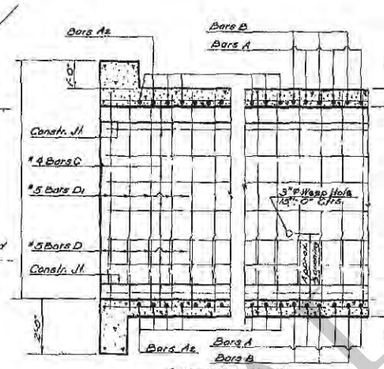

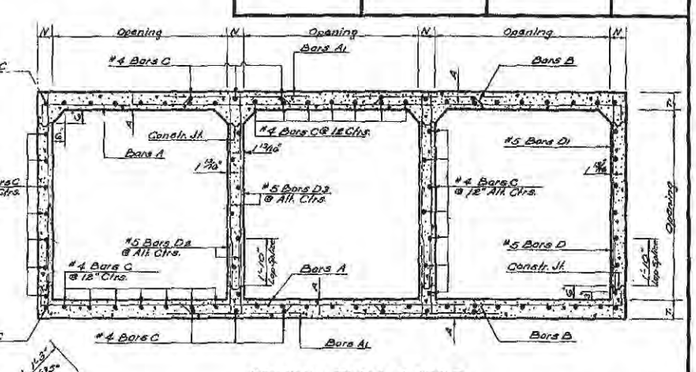

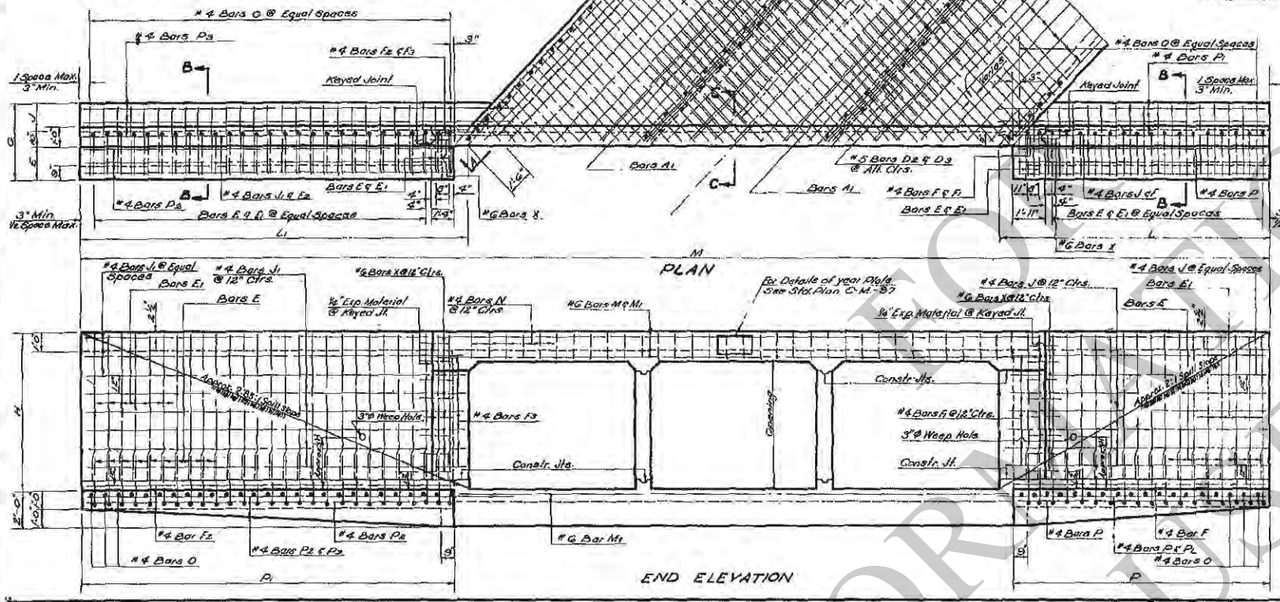

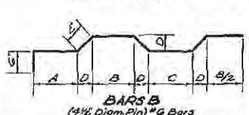

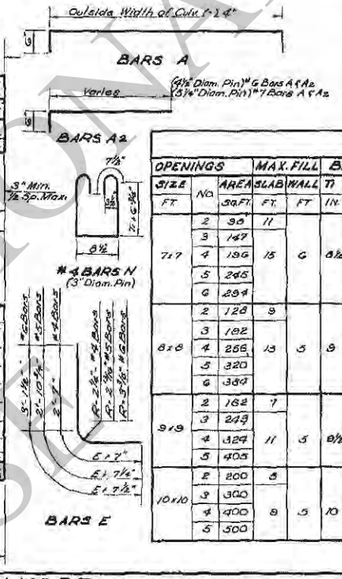

DIMENSIONS FOR BARS B					
SIZE	A	B	C	D	E
7'x7'	5'-5 5/8"	3'-8 1/8"	3'-1 7/8"	8 3/8"	6 3/16"
8'x8'	6'-3 3/8"	4'-2 5/8"	3'-6 3/4"	5 1/16"	7 3/16"
9'x9'	7'-1 1/8"	4'-8 1/8"	4'-0 1/4"	5 5/16"	8 1/16"
10'x10'	7'-10 7/8"	5'-3 7/8"	4'-5 1/8"	6 1/16"	8 7/16"

| DIMENSIONS | | | | |

F.A.P.	STATE PROJECT	PARISH	SHEET NO.

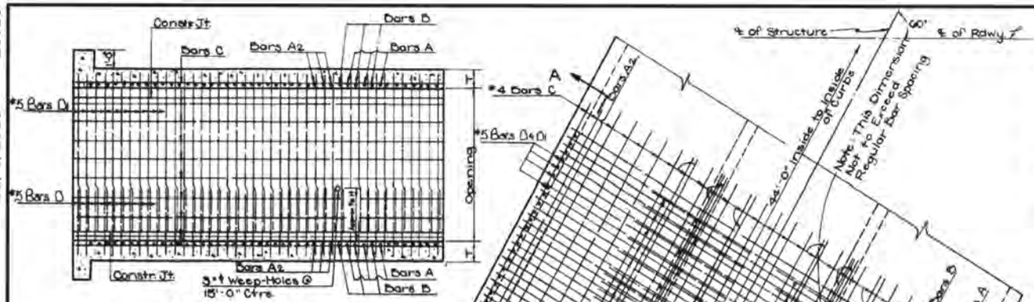

SECTION A-A

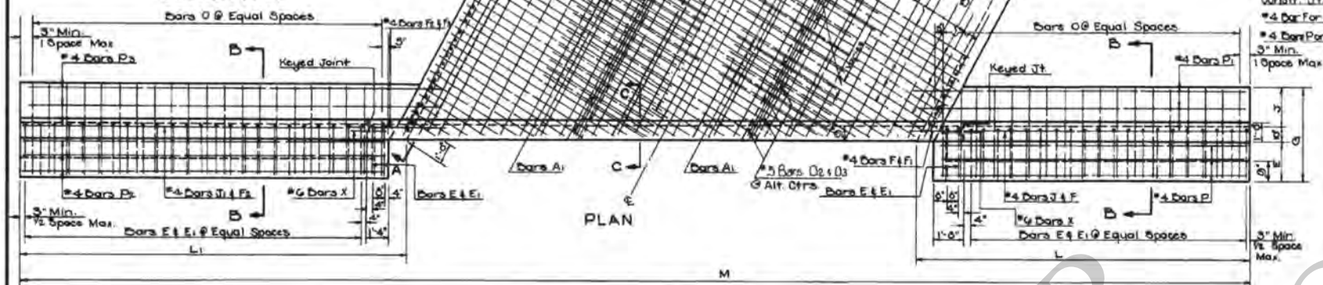

PLAN

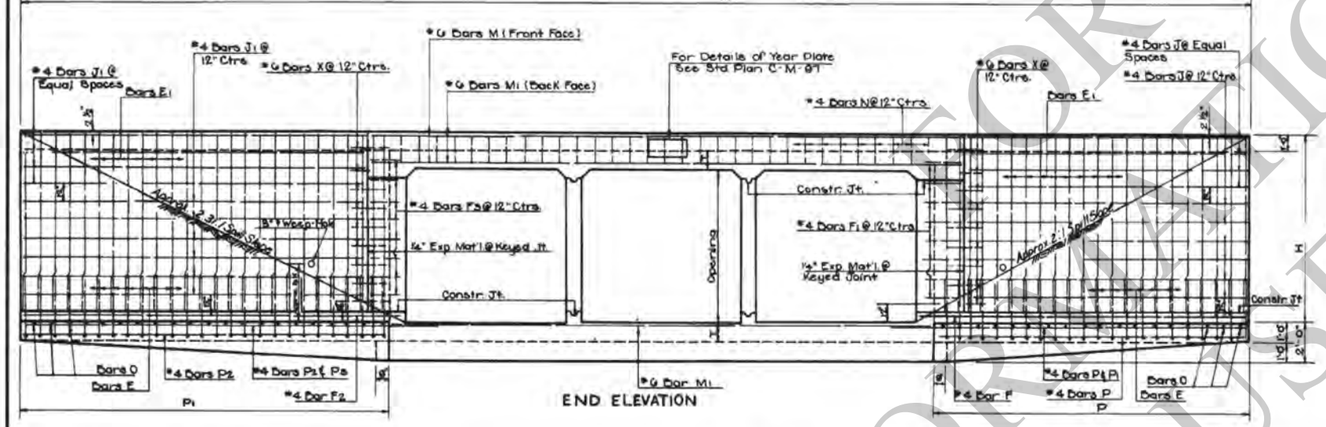

END ELEVATION

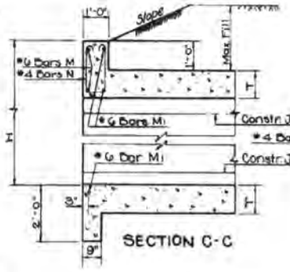

SECTION C-C

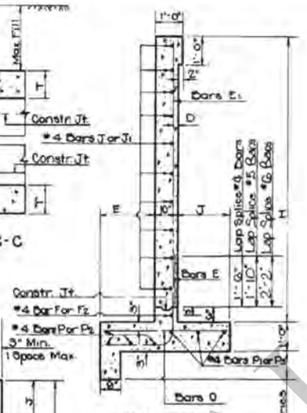

SECTION B-B

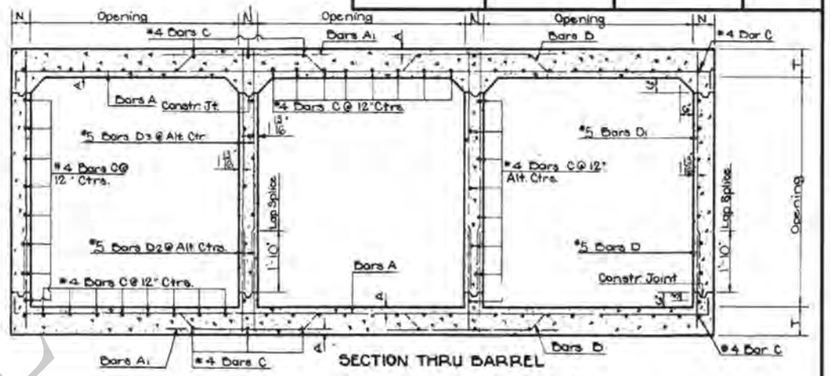

SECTION THRU BARREL

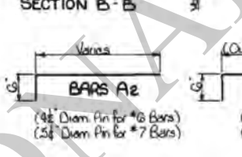

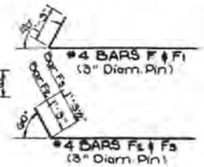

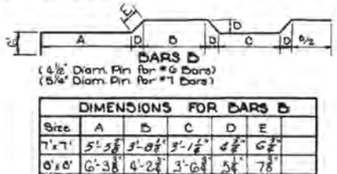

DIMENSIONS FOR BARS B

Size	A	B	C	D	E
7'x7'	5'-5⅜"	3'-8⅞"	3'-1⅛"	6⅝"	6½"
6'x6'	6'-3⅜"	4'-2⅞"	3'-0⅝"	5⅛"	7⅝"
8'x8'	7'-1⅜"	4'-9⅞"	4'-0⅝"	5⅝"	8⅛"
10'x10'	7'-10 9/16"	5'-3⅞"	4'-5⅞"	6⅝"	8⅛"

DIMENSIONS

Openings Size Feet	No	Area Sq. Ft.	MAX. Fill SLAB	MAX. Fill WALLS	BARREL T	BARREL N	BARREL A	Wings and Curbs E Ft-In.	J Ft-In.	G Ft-In.	D In.	H Ft-In.	L Ft-In.	L1 Ft-In.	P Ft-In.	P1 Ft-In.	M Ft-In.
7x7	2	98	11														52-7½
	3	147															61-4½
	4	196	13	6	8½	7	1⅛	1-10	1-7	4-3	1⅜	8-0½	16-0½	19-1⅛	16-0	18-5	70-1½
	5	245															78-10½
	6	294															87-7½
6x6	2	126	9														58-7⅛
	3	192															68-7½
	4	256	13	5	9	8	1⅛	2-0	2-0	4-10	1⅜	9-9	18-2½	21-2½	17-5	20-5	79-7½
	5	320															88-7½
	6	384															98-7½
9x9	2	162	7														65-7½
	3	243		5	8½	8	1⅜	2-2	2-4	5-4	1 3/16	10-3½	20-5½	23-6½	19-7	22-8	76-10½
	4	324	11														88-1½
	5	405															99-4½
10x10	2	200	5														72-3½
	3	300		5	10	10	1⅝	2-5	2-8	5-11	1⅝	11-10	22-8½	26-4½	21-5	28-5	85-3½
	4	400	9														97-10
	5	500															110-4⅜

QUANTITIES FOR 44'-0" ALONG ℄ OF CULVERT

Openings Size Feet	Per Linear Foot of Barrel Steel Lbs.	Per Linear Foot of Barrel Concrete Cu. Yds.	Total Quantities Steel Lbs.	Total Quantities Concrete Cu. Yds.
7x7	177.86	1.2986	10,458	93.75
	264.85	1.8870	14,830	120.89
	351.83	2.4754	19,331	168.02
	438.82	2.9738	13,383	178.16
	527.82	3.5322	29,051	202.30
6x6	210.50	1.6111	12,574	115.00
	313.92	2.2996	17,906	169.00
	417.34	2.9077	23,247	182.31
	533.76	3.6759	29,153	215.62
	637.20	4.3682	34,882	260.93
9x9	252.18	1.9560	15,491	140.70
	375.86	2.7870	21,683	180.77
	499.49	3.6181	28,232	220.86
	637.39	4.4991	35,443	260.92
10x10	298.08	2.3393	18,308	168.89
	445.65	3.3200	26,819	218.02
	610.35	4.3066	34,820	263.44
	756.34	5.2932	43,301	310.67

BILL OF REINFORCING STEEL FOR 44'-0" CULVERT

BARREL REINFORCEMENT

Openings Size Feet	No	Bars A Size	No	Length Ft.-In.	Spac. In.	Bars A1 Size	No	Length Ft.-In.	Spac. In.	Bars A2 Size	No	Short Bar Ft.-In.	Vertical In.	Long Bar Ft.-In.	Spac. In.	Bars B Size	No	Length Ft.-In.	Spac. In.	*5 BARS D1 & D4 No.	Length Bars D Ft.-In.	Length Bars D1 Ft.-In.	Spac. In.	*5 BARS D2 & D3 No.	Length Bars D2 Ft.-In.	Length Bars D3 Ft.-In.	Spac. In.	*4 Bars C Size	No	Length Ft.-In.	Spac. In.
7x7	2	#6	68	10'-5"	13	#6	80	2'-6	⑤12857	15'-6	6½	#6	70	16'-9	13	9½	5'-10	7'-0	12	87	2'-10	7'-0	12	89	4'-5						
	3	#6	60	28'-0	13	#6	192	5'-8	⑤1787	28'-0	6½	#6	62	28'-8	13	9½	2'-10	7'-0	12	86	2'-10	7'-0	12	86	6'-7½						
	4	#6	52	31'-7	13	#6	312	5'-8	⑤2667	30'-6	6½	#6	54	32'-7	13	9½	2'-10	7'-0	12	141	2'-10	7'-0	12	113	8'-7½						
	5	#6	44	39'-2	13	#6	448	5'-8	⑤2632	38'-0	6½	#6	46	40'-6	13	9½	2'-10	7'-0	12	188	2'-10	7'-0	12	140	10'-7½						
	6	#6	36	⑤48'-11	13	#6	600	5'-8	⑤2607	⑤48'-6	6½	#6	38	⑤50'-7	13	9½	2'-10	7'-0	12	235	2'-10	7'-0	12	167	12'-7½						
6x6	2	#6	70	18'-6	12	#6	840	6'-3	⑥1296	18'-10	6	#6	76	2'-5	10.9888	18'-10	6	#6	72	19'-0½	12	9½	2'-11	8'-1	12	82	2'-11	8'-1	12	66	41'-5
	3	#6	60	27'-8	12	#6	216	6'-3			6	#6	116	2'-5	10.3929	28'-8	6	#6	62	28'-0½	12	9½	2'-11	8'-1	12	84	2'-11	8'-1	12	96	41'-5
	4	#6	50	36'-0	12	#6	336	6'-3	⑥1296	35'-8	6	#6	52	37'-0½	10.3847	35'-8	6	#6	52	37'-0½	12	9½	2'-11	8'-1	12	101	2'-11	8'-1	12	126	41'-5
	5	#6	40	⑤42'-10	12	#6	512	6'-3	⑥1296	⑤41'-0	6	#6	42	⑤43'-3	10.3956	⑤41'-0	6	#6	42	⑤43'-3	12	9½	2'-11	8'-1	12	150	2'-11	8'-1	12	156	41'-5
	6	#6	30	⑤35'-6	12	#6	690	6'-3	⑥1296	⑤32'-8	6	#6	32	⑤37'-3½	10.3906	⑤32'-8	6	#6	32	⑤37'-3½	12	9½	2'-11	8'-1	12	255	2'-11	8'-1	12	186	41'-5
9x9	2	#6	76	20'-11	11	#6	108	6'-9	⑤5911	20'-0	5½	#6	82	2'-6	15.5855	20'-0	5½	#6	76	21'-3½	11	10¢	2'-11	9'-1	10½	53	2'-11	9'-1	10½	73	47'-5
	3	#6	64	30'-8	11	#6	864	6'-9	⑤5911	29'-6	5½	#6	64	31'-5½	11	10¢	2'-11	9'-1	10½	108	2'-11	9'-1	10½	106	9'-7						
	4	#6	50	40'-5	11	#6	400	6'-9	⑤5911	39'-10	5½	#6	50	41'-7½	11	10¢	2'-11	9'-1	10½	159	2'-11	9'-1	10½	139	47'-5
	5	#6	38	⑤52'-9	11	#6	580	6'-9	⑤5911	⑤49'-4	5½	#6	40	⑤53'-11	11	10¢	2'-11	9'-1	10½	212	2'-11	9'-1	10½	172	47'-5
10x10	2	#7	58	23'-2	14	#7	116	7'-8	⑦14	#7	80	2'-7	12.1833	21'-9	7	#7	58	23'-7	14	124	3'-0	10'-2	9	62	3'-0	10'-2	9	80	47'-5		
	3	#7	46	34'-0	14	#7	192	7'-8	⑦14	#7	124	2'-7	12.1333	32'-11	7	#7	48	34'-10	14	124	3'-0	10'-2	9	124	3'-0	10'-2	9	116	47'-5		
	4	#7	34	⑤47'-5	14	#7	368	7'-8	⑦14	#7	168	2'-7	12.1320	⑤44'-0	7	#7	36	⑤48'-8	14	124	3'-0	10'-2	9	186	3'-0	10'-2	9	152	47'-5		
	5	#7	24	⑤58'-3	14	#7	576	7'-8	⑦14	#7	212	2'-7	12.1154	⑤55'-1	7	#7	24	⑤59'-11	14	124	3'-0	10'-2	9	248	3'-0	10'-2	9	188	47'-5		

WINGS AND CURB REINFORCEMENT

Openings Size Feet	No	Bars E Size	No	Length Ft.-In.	Spac. In.	Bars E1 Size	No	Length Ft.-In.	Spac. In.	*4 Bars F No.	Length Ft.-In.	*4 Bars F1 No.	Length Ft.-In.	*4 Bars F2 No.	Length Ft.-In.	*4 Bars F3 No.	Length Ft.-In.	*4 Bars J No.	Length Ft.-In.	*4 Bars J1 No.	Length Ft.-In.	Bars O Size	No.	Length Ft.-In.	Spac. In.	*4 Bars P No.	Length Ft.-In.	*4 Bars P1 No.	Length Ft.-In.	*4 Bars P2 No.	Length Ft.-In.	*4 Bars P3 No.	Length Ft.-In.	*4 Bars N No.	Length Ft.-In.	*6 Bars M No.	Length Ft.-In.	*6 Bars M1 No.	Length Ft.-In.	*6 Bars X No.	Length Ft.-In.
7x7	2	#6	78	5'-0	11	#4	78	8'-0	11	2	17'-2	12	2'-8	2	20'-6	18	3'-2	18	14'-0	18	16'-9	#6	68	3'-10	12	8	15'-8	6	17'-0	8	18'-1	6	21'-0	36	4'-6	4	20'-8	6	17'-10	32	2'-0
	3																																		58	4'-6	4	29'-5	6	26'-7	32	2'-0
	4																																		78	4'-6	4	38'-2	6	35'-8	32	2'-0
	5																																		88	4'-6	4	⑤39'-1	6	⑤46'-3	32	2'-0
	6																																		106	4'-6	4	⑤51'-10	6	⑤53'-0	32	2'-0
6x6	2																																		42	4'-7	4	23'-3	6	20'-4	36	2'-0
	3																																		62	4'-7	4	33'-3	6	30'-4	36	2'-0
	4																																		82	4'-7	4	⑤25'-3	6	⑤42'-0	36	2'-0
	5																																		102	4'-7	4	⑤55'-3	6	⑤52'-7	36	2'-0
	6																																		122	4'-7	4	⑤63'-3	6	⑤62'-7	36	2'-0
9x9	2																																		46	4'-8	4	28'-10	6	23'-0	40	2'-0
	3																																		70	4'-8	4	39'-1	6	34'-3	40	2'-0
	4																																		92	4'-8	4	⑤50'-8	6	⑤47'-5	40	2'-0
	5																																		114	4'-8	4	⑤61'-8	6	⑤58'-11	40	2'-0
10x10	2																																		58	4'-8	4	28'-5	6	25'-7	44	2'-0
	3																																		76	4'-9	4	⑤43'-1	6	38'-1	44	2'-0
	4																																		102	4'-9	4	⑤55'-7	6	⑤52'-3	44	2'-0
	5																																		126	4'-9	4	⑤68'-2	6	⑤65'-3	44	2'-0

⑦ Includes 1- 1'-6" Lap Splice.
② Includes 1- 2'-2" Lap Splice.
⑤ Does not include Lap Splice.
When Bar Length Exceeds 40'-0" Add 1-2'-2" Lap Splice
⑥ Includes one 2'-7" Lap Splice

⑤ Does not include Lap Splice when Bar Length Exceeds 40'-0", Add 2'-7" Lap Splice.

General Notes Cont'd
For Detail of Joints, See Std. Plan C.M. - 48.

CC·S·M·7-10·S·60°·2

Ⓐ *6 Bars X to be ¾"ϕ Smooth and Greased for 1'-0" of Length

APPROVED BY:
Dwayne D. Walpole
CHIEF ENGINEER
1-5-78
DATE

1-5-78	Rev. Weep Hole Note	W.T.M.	
5-20-76	Rev. Steel Quan. (5)(6)	W.T.M.	
2-20-76	Rev. Slope Intercept	W.T.M.	
6-6-75	Rev. General Notes for Steel	W.E.M.	
5-2-07	Added Axle Steel	W.E.M.	

12-15-64	Rev. General Notes	W.E.M.	
9-1-64	Added 3½'s for 10'x10'	W.E.M.	
2-1-34	DOWELS 'X' TO SMOOTH	W.E.M.	
9-1-63	Added 5-Cpg. 8'x8'	W.E.M.	
5-19-63	7'x7' Added	W.E.M.	
DATE	DESCRIPTION	BY	
REVISIONS			

STATE OF LOUISIANA
DEPARTMENT OF HIGHWAYS

DESIGNED G.A.M./M.Y.Y.	DETAILED M.Y.Y.	TRACED C. Ford	
CHECKED W.C. Marcuse	CHECKED W.C. Marcuse	CHECKED W.C. Marcuse	

BRIDGE DESIGN SECTION

General Notes:
Construction Specifications: Latest Approved La Dept. of Highways Standard Specifications.
Design Specifications: A.A.S.H.O. 1961 as Amended by Int. Spec. 1964.
Live Load H S 20-44, or Military Loading, Whichever is Greater.
All Concrete to be Class "A".
All Exposed Corners to have ¾" Chamfer, Unless Otherwise Noted.
Reinforcement Shall Be Billet-Steel A.S.T.M. A 615 or Rail-Steel A.S.T.M. A 616 or Axle-Steel A.S.T.M. A 617
Dimensions Relating to Reinforcing Steel are to Bar Centers.
A 1'-6" Square of Plastic Filter Cloth (See Qualified Products List) shall be placed in Contact with Concrete, behind each Weep Hole, in addition to approx. 2 Cu. Ft. of Concrete Sand.

DIMENSIONS FOR BARS E

Opening	Bar Size	R	X	Y
7'x7'	#4	6⅝"	2'-7"	2'-5"
6'x6'	#5	2 13/16"	2'-10⅜"	2'-7½"
9'x9'	#5	8 11/16"	3'-4⅜"	3'-2⅝"
10'x10'	#6	3⅜"	3'-10⅝"	3'-8⅞"

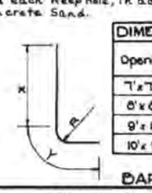

BARS E

STANDARD PLAN
MULTIPLE OPENINGS
REINFORCED CONCRETE BOX CULVERTS
STRAIGHT WINGS 60° CROSSING
2:1 SPILL SLOPE NORMAL TO CHANNEL
DATED October 25, 1962 7'x7' TO 10'x10'

FOR OFFICIAL USE ONLY

11/4/2015 14:20
I:\PWP\dms09544\CCSM7-10S60_2.dgn

F.A.P.	STATE PROJECT	PARISH	SHEET NO.

12/17/2012 08:49

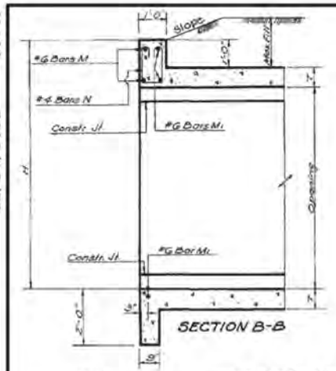

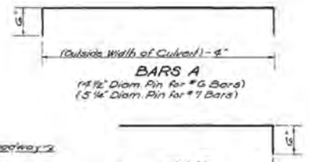

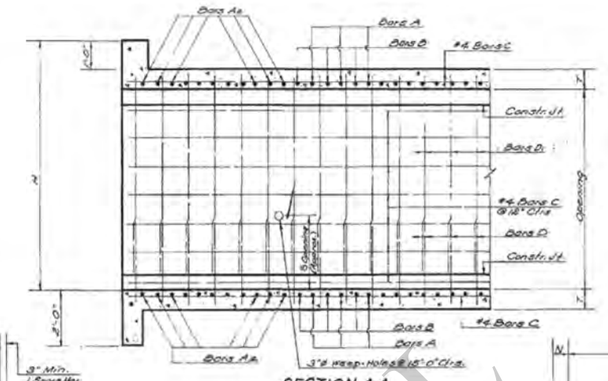

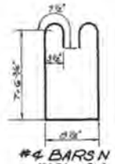

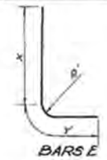

DIMENSIONS FOR BARS E			
SIZE	BARS	R	X	Y
7'x7'	#4	2'-1¼"	2'-3"	2'-0"
8'x8'	#5	2'-9⅛"	3'-10⅝"	3'-7⅛"
9'x9'	#5	2'-9⅛"	3'-10⅝"	3'-9⅛"
10'x10'	#6	3'-5⅜"	5'-1⅞"	5'-0⅝"

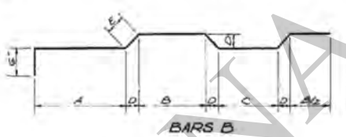

DIMENSIONS FOR BARS B						
SIZE	DIA. OF PIN	A	B	C	D	E
7'x7'	4 ½"	6'-0 ⅝"	3'-8⅝"	3'-1⅜"	4'-4⅜"	6'-9⅜"
8'x8'	4 ¾"	6'-3⅝"	4'-2⅜"	3'-5⅝"	5'-1⅞"	7'-1⅜"
9'x9'	4 ¾"	7'-1⅞"	4'-8⅜"	4'-0⅛"	5'-9⅛"	8'-1⅜"
10'x10'	5⅛"	7'-10⅜"	5'-3⅞"	4'-5⅜"	6'-1⅛"	8'-10⅜"

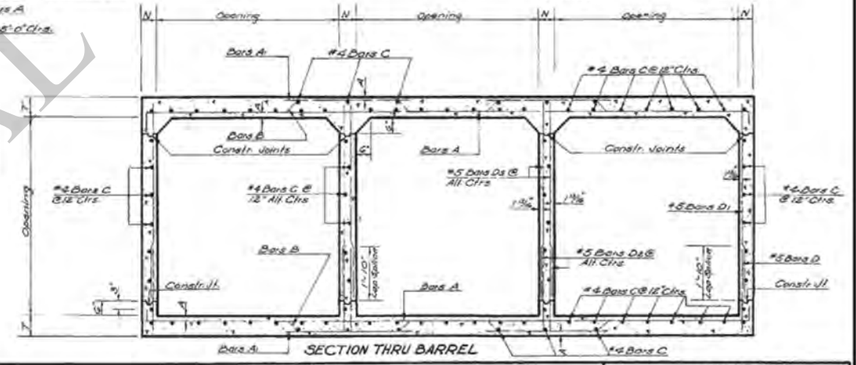

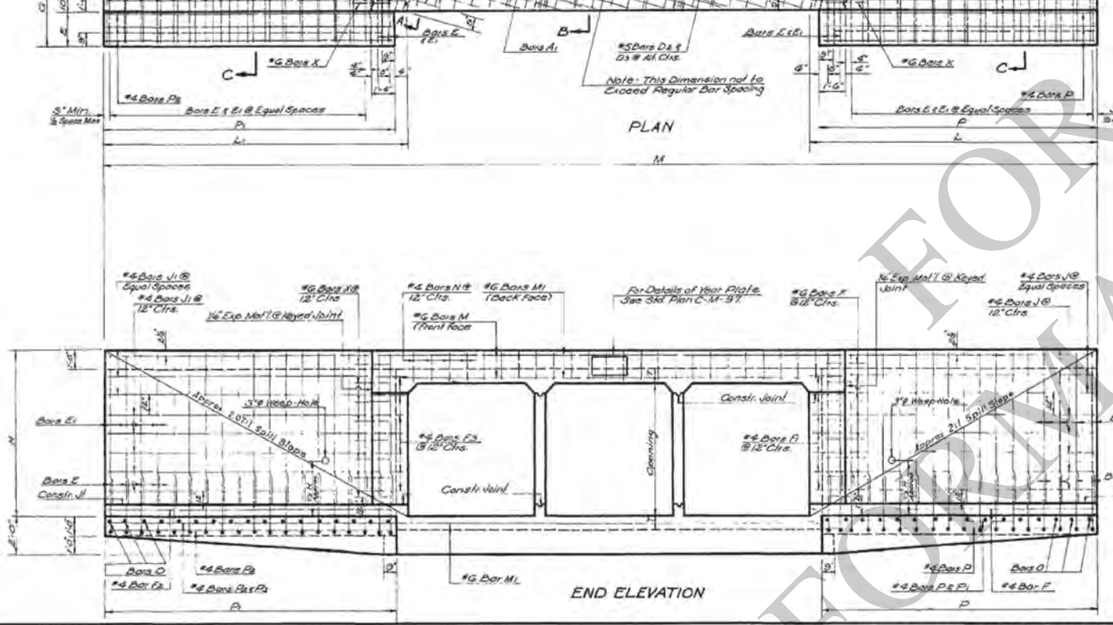

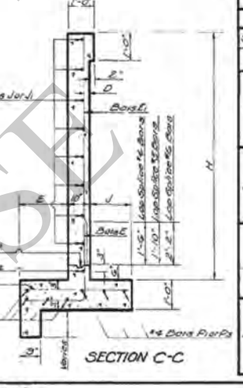

DIMENSIONS

OPENINGS SIZE Ft.	OPENINGS No.	OPENINGS AREA Sq.Ft.	MAX. FILL SLAB Ft.	MAX. FILL WALL Ft.	BARREL T In.	BARREL N In.	BARREL A In.	WINGS AND CURBS E Ft.-In.	J Ft.-In.	G Ft.-In.	D In.	H Ft.-In.	L Ft.-In.	Li Ft.-In.	P Ft.-In.	Pi Ft.-In.	M Ft.-In.
7'x7'	2	98	11														
	3	147															
	4	196	18	6	8½	7	1⅞	1'-10	1'-7	4'-3	1¾	8'-8⅝	16'-8¼	17'-3⅛	16'-10	16'-8	
	5	245															
	6	294															
8'x8'	2	128	9														
	3	192															
	4	256	13	5	9	8	1⅞	2'-0	2'-0	4'-10	1 13/16	9'-9	18'-7⅝	18'-8⅝	17'-11	18'-8	
	5	320															
	6	384															
9'x9'	2	162	7														
	3	243															
	4	324	11	5	9½	8	1⅞	2'-2	2'-4	5'-4	1 15/16	10'-9⅛	20'-10⅛	21'-5⅝	20'-1	20'-8	
	5	405															
10'x10'	2	200	5														
	3	300	9	5	10	10	1⅞	2'-5	2'-8	5'-11	1⅞	11'-10	22'-9⅛	24'-0⅜	21'-11	23'-2	
	4	400															
	5	500															

QUANTITIES PER LIN. FT. OF BARREL 44'-0" CULVERT

STEEL Pounds	CONC. Cu. Yds.	STEEL Pounds	CONC. Cu. Yds.
177.86	1.2986	10,227	31.46
264.85	1.8570	14,486	118.33
351.83	2.4154	16,737	145.20
438.82	2.9738	23,159	172.07
527.82	3.5322	28,127	198.94
210.80	1.6111	12,452	113.35
313.92	2.2994	17,467	146.76
417.36	2.9877	22,642	179.76
533.78	3.6759	28,947	212.78
637.20	4.3642	33,698	245.73
252.18	1.9560	15,209	138.24
375.85	2.7870	21,182	177.95
499.44	3.6181	27,444	217.66
687.39	4.4491	34,351	257.37
299.05	2.3333	18,930	165.54
445.85	3.3200	26,123	212.55
610.35	4.3066	34,078	259.57
756.94	5.2932	41,656	306.58

BILL OF REINFORCING STEEL FOR 44'-0" CULVERT

BARREL REINFORCEMENT

OPENINGS Size Ft.	OPENINGS No.	BARS A Size	BARS A Length Ft.-In.	BARS A Sp. In.	BARS A1 Size	BARS A1 No.	BARS A1 Length Ft.-In.	BARS A1 Sp. In.	BARS A2 Size	BARS A2 No.	BARS A2 Short Bar Ft.-In.	BARS A2 Variation In.	BARS A2 Long Bar Ft.-In.	BARS A2 Sp. In.	BARS B Size	BARS B No.	BARS B Length Ft.-In.	BARS B Sp. In.	*5 BARS D & D1 No.	*5 BARS D & D1 Light Bars D Ft.-In.	*5 BARS D & D1 Light Bars D1 Ft.-In.	*5 BARS D & D1 Sp. In.	*5 BARS D2 & D3 Light Bars D2 Ft.-In.	*5 BARS D2 & D3 Light Bars D3 Ft.-In.	*5 BARS D2 & D3 Sp. In.	*4 BARS C No.	*4 BARS C Length Ft.-In.
7'x7'	2	*6	16'-8	13	*6	88	5'-8	8½	*6	28	3'-1	24.3333	16'-3	13	*6	76	16'-9	13	32	2'-10	5'-0	12	4'-6	2'-10	5'-0	12	59	47'-2
	3	*6	70	24'-0	13	*6	100	5'-8	*6	44	3'-1	24.3306	23'-4	13	*6	74	24'-8	13	92	2'-10	7'-0	12	92	2'-10	7'-0	12	86	47'-2
	4	*6	70	31'-7	13	*6	282	5'-8	*6	56	3'-1	24.2306	29'-4	13	*6	70	32'-7	13	92	2'-10	7'-0	12	138	2'-10	7'-0	12	113	47'-2
	5	*6	66	39'-2	13	*6	392	5'-8	*6	72	3'-1	24.2353	37'-5	13	*6	66	40'-6	13	92	2'-10	7'-0	12	184	2'-10	7'-0	12	140	47'-2
	6	*6	66	⑥48'-11	13	*6	564	5'-8	*6	88	3'-1	24.2381	⑥45'-6	13	*6	66	⑥50'-7	13	92	2'-10	7'-0	12	230	2'-10	7'-0	12	167	47'-2
8'x8'	2	*6	88	15'-8	12	*6	96	G-3	*6	36	3'-2	22.3350	16'-1	G	*6	82	19'-0¾	12	32	2'-11	6'-1	12	46	2'-11	6'-1	12	66	47'-2
	3	*6	78	27'-4	12	*6	200	G-3	*6	52	3'-2	22.4167	25'-7	G	*6	76	28'-0⅛	12	92	2'-11	6'-1	12	92	2'-11	6'-1	12	96	47'-2
	4	*6	72	36'-0	12	*6	312	G-3	*6	72	3'-2	22.4118	34'-11	G	*6	74	③70'-4¾	12	92	2'-11	6'-1	12	138	2'-11	6'-1	12	126	47'-2
	5	*6	70	⑥46'-10	12	*6	430	G-3	*6	60	3'-2	22.3810	⑥42'-4	G	*6	70	⑥46'-3	12	92	2'-11	6'-1	12	184	2'-11	6'-1	12	156	47'-2
	6	*6	64	⑥55'-6	12	*6	568	G-3	*6	100	3'-2	22.3846	⑥51'-8	G	*6	64	⑥57'-3⅛	12	92	2'-11	6'-1	12	230	2'-11	6'-1	12	186	47'-2
9'x9'	2	*6	88	20'-11	11	*6	104	G-3	*6	44	3'-3	20.5000	20'-4	G	*6	88	21'-3½	11	106	2'-11	9'-1	10½	55	2'-11	9'-1	10½	73	47'-2
	3	*6	82	30'-8	11	*6	216	G-3	*6	66	3'-3	20.5333	28'-11	G	*6	84	31'-5½	11	106	2'-11	9'-1	10½	106	2'-11	9'-1	10½	106	47'-2
	4	*6	76	40'-5	11	*6	344	G-3	*6	88	3'-3	20.5238	39'-2	G	*6	78	41'-7½	11	106	2'-11	9'-1	10½	159	2'-11	9'-1	10½	139	47'-2
	5	*6	70	⑥52'-4	11	*6	486	G-3	*6	112	3'-3	20.5185	⑥49'-5	G	*6	72	⑥53'-11	11	106	2'-11	9'-1	10½	212	2'-11	9'-1	10½	172	47'-2
10'x10'	2	*7	68	25'-2	14	*7	80	7'-8	14	*7	36	3'-4	26.1250	20'-9	7	*7	70	25'-7	14	124	3'-0	10'-2	9	62	3'-0	10'-2	9	80	47'-2
	3	*7	64	34'-0	14	*7	172	7'-8	14	*7	56	3'-4	26.1538	31'-8	7	*7	64	34'-10	14	124	3'-0	10'-2	9	124	3'-0	10'-2	9	116	47'-2
	4	*7	58	⑥47'-5	14	*7	270	7'-8	14	*7	76	3'-4	26.1111	⑥42'-6	7	*7	60	⑥48'-8	14	124	3'-0	10'-2	9	186	3'-0	10'-2	9	152	47'-2
	5	*7	54	⑥58'-3	14	*7	364	7'-8	14	*7	96	3'-4	26.1304	⑥53'-5	7	*7	54	⑥59'-11	14	124	3'-0	10'-2	9	248	3'-0	10'-2	9	188	47'-2

WINGS AND CURBS REINFORCEMENT Ⓐ

BARS E Size	BARS E No.	BARS E Length Ft.-In.	BARS E Sp. In.	BARS E1 Size	BARS E1 No.	BARS E1 Length Ft.-In.	BARS E1 Sp. In.	#4 BARS F No.	#4 BARS F Length Ft.-In.	#4 BARS F1 No.	#4 BARS F1 Length Ft.-In.	#4 BARS F2 No.	#4 BARS F2 Length Ft.-In.	#4 BARS F3 No.	#4 BARS F3 Length Ft.-In.	#4 BARS J No.	#4 BARS J Length Ft.-In.	#4 BARS J1 No.	#4 BARS J1 Length Ft.-In.	BARS O Size	BARS O No.	BARS O Length Ft.-In.	BARS O Sp. In.	#4 BARS P No.	#4 BARS P Length Ft.-In.	#4 BARS P1 No.	#4 BARS P1 Length Ft.-In.	#4 BARS P2 No.	#4 BARS P2 Length Ft.-In.	#4 BARS P3 No.	#4 BARS P3 Length Ft.-In.	#4 BARS N No.	#4 BARS N Length Ft.-In.	#6 BARS M No.	#6 BARS M Length Ft.-In.	#6 BARS M1 No.	#6 BARS M1 Length Ft.-In.	#6 BARS X No.	#6 BARS X Length Ft.-In.
#4	74	5'-0	11	#4	74	8'-0	11	2	17'-2	14	2'-8½	2	18'-4	14	2'-10½	16	18'-0	16	18'-0	#4	66	3'-10	12	6	15'-6	G	17'-0	6	16'-4	G	18'-8	38	4'-6	4	18'-7	G	15'-11	32	2'-0
																																48	4'-6	4	24'-5	G	23'-9	32	2'-0
																																62	4'-6	4	34'-3	G	31'-8	32	2'-0
																																80	4'-6	4	⑥44'-4	G	39'-6	32	2'-0
																																94	4'-6	4	⑥52'-2	G	⑥43'-6	32	2'-0
#5	90	5'-6	10	#4	90	9'-1	10	2	19'-4	16	2'-9½	2	20'-5	16	2'-11½	18	18'-1	18	17'-0	#4	74	4'-5	12	6	17'-7	G	19'-1	6	18'-4	G	20'-0	36	4'-7	4	20'-11	G	18'-3	36	2'-0
																																56	4'-7	4	29'-11	G	27'-3	36	2'-0
																																72	4'-7	4	38'-10	G	36'-2	36	2'-0
																																90	4'-7	4	⑥50'-0	G	⑥43'-4	36	2'-0
																																108	4'-7	4	⑥57'-0	G	⑥50'-4	36	2'-0
#5	122	5'-8	8	#4	122	10'-1	8	2	21'-7	18	3'-10½	2	22'-6	18	3'-0½	22	18'-3	22	18'-0	#4	98	4'-11	10	8	19'-9	G	21'-3	8	20'-4	G	22'-10	40	4'-8	4	25'-3	G	20'-7	40	2'-0
																																60	4'-8	4	33'-4	G	30'-8	40	2'-0
																																82	4'-8	4	⑥35'-7	G	⑥32'-11	40	2'-0
																																102	4'-8	4	⑥55'-8	G	⑥53'-0	40	2'-0
#6	128	6'-2	8½	#5	126	11'-2	8½	2	23'-8	20	2'-11½	2	25'-1	20	3'-1½	24	20'-1	24	21'-6	#5	98	5'-6	11	8	21'-7	6	23'-1	8	22'-10	6	25'-4	48	4'-9	4	25'-7	G	22'-11	44	2'-0
																																68	4'-9	4	36'-9	G	34'-2	44	2'-0
																																90	4'-9	4	⑥50'-2	G	⑥47'-6	44	2'-0
																																112	4'-9	4	⑥61'-5	G	⑥58'-9	44	2'-0

① Includes 1'-1'-6" Lap Splice.
② Includes 1'-2'-2" Lap Splice.
③ Does not Include Lap Splice; When Length of Bar Exceeds 40'-0", Add 2'-2" Lap Splice.
④ Includes 1'-2'-7" Lap Splice
⑤ Does not Include Lap Splice; When Length of Bar Exceeds 40'-0", Add 2'-7" Lap Splice.

Ⓐ *6 Bars X to be ¾"ø Smooth and Greased for 1'-0" of Length

CC·S·M·7-10·S·75°·1

GENERAL NOTES:

CONSTRUCTION SPECIFICATIONS: Latest Approved La. Dept. of Highways Std. Specs.
DESIGN SPECIFICATIONS: A.A.S.H.O. 1961 as amended by Int. Spec. 1962.
LIVE LOAD: HS 20-44, or Military Loading, whichever is Greater.
All Concrete to be Class "A".
All Exposed Corners to have ¾" Chamfer, unless Otherwise noted.
Reinforcement shall be Billet Steel A.S.T.M. A 615 or Rail Steel A.S.T.M. A 616 or Axle Steel A.S.T.M. A 617.
Dimensions relating to Maintaining Steel are to Bar Ctrs.
A 1'-6" Square of Plastic Filter Cloth (See Qualified Products List) shall be placed in contact with Concrete behind each Weep Hole, in addition to 2 Cu. Ft. of Concrete Sand.
For Detail of Joints, See Std. Plan C.M. - 99.

APPROVED BY:
Dumas D. Phillips — CHIEF ENGINEER
1-11-78 — DATE

STANDARD PLAN
MULTIPLE OPENINGS
REINFORCED CONCRETE BOX CULVERTS
STRAIGHT WINGS 75° CROSSING
2:1 SPILL SLOPE NORMAL TO CHANNEL
DATED June 15, 1962
7'x7' TO 10'x10'

STATE OF LOUISIANA
DEPARTMENT OF HIGHWAYS

DESIGNED M. Yoshie — DETAILED G.H. Allen — TRACED W. Hebert
CHECKED Q.A.H. — CHECKED M. Yoshie — CHECKED W.C.M.
IN CHARGE OF

DATE	DESCRIPTION	BY
1-11-78	Rev. Weep Hole Note	W.T.J.
5-30-75	Revised Spill Slope	W.T.J.
	REVISIONS	

DATE	DESCRIPTION	BY
6-8-78	Rev. Sponsors' Note for Sheet	W.E.M.
6-27-67	Added Axle Steel	W.E.M.
12-15-64	Rev. General Notes	W.T.M.
6-3-64	DEFORMED BARRELS 7'X 7' TO SMOOTH	W.E.M.
	REVISIONS	

FOR INFORMATIONAL USE ONLY

IP_PWP:dms09544\CCSM7-10S75_1.dgn

3/3/2020 13:45
IP_PWP:dms09544\CCSM7-10S90_1.dgn

F.A.P.	STATE PROJECT	PARISH	SHEET NO.

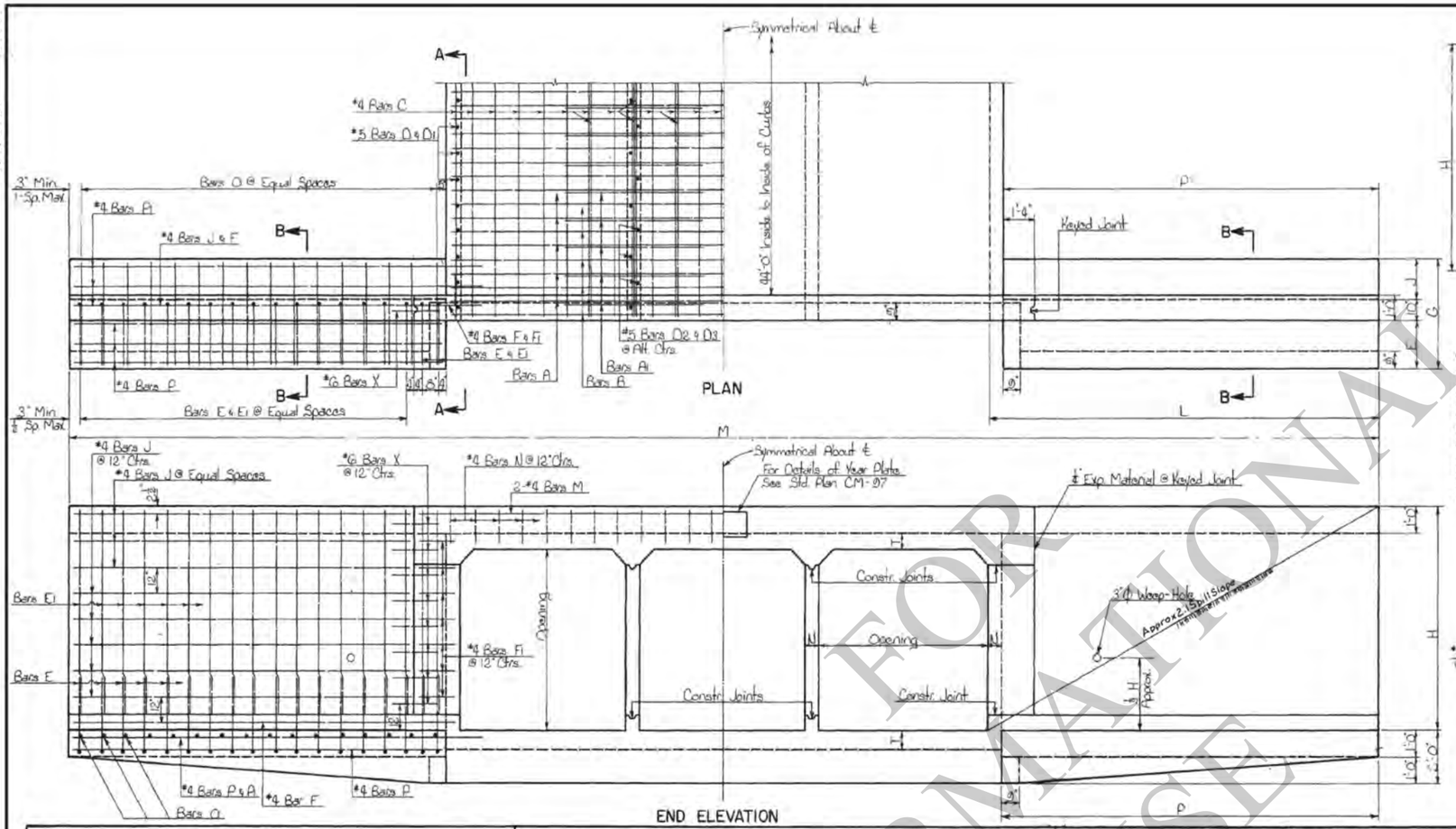

GENERAL NOTES:
Construction Specifications: Latest Approved La. Dept. of Highways Std. Specs.
Design Specifications: A.A.S.H.O. 1961 as amended by Int. Specs. 1964.
Live Load: H S 20-44, or Military Loading, whichever is Greater.
All Concrete to be Class "A".
All Exposed Corners to have ¾" Chamfer unless otherwise noted.
Reinforcement shall be **Billet-Steel A.S.T.M. A615 or Rail-Steel A.S.T.M. A616 or Axle-Steel A.S.T.M. A617.**
Dimensions relating to Reinforcing Steel are to Bar Centers.
A 1'-6" Square of Plastic Filter Cloth (See Qualified Products List) shall be placed in contact with Concrete behind each Weep Hole, in addition to approx. 2 Cu. Ft. of Concrete Sand.
For Details of Joints, See Std. Plan C.M.-93.

DIMENSIONS

OPENINGS SIZE (Feet)	OPENINGS No.	OPENINGS AREA Sq. Ft.	MAXFILL SLABWALLS Ft.	BARREL T (In.)	BARREL N (In.)	BARREL Y (In.)	WINGS AND CURBS D (In.)	E Ft-In	J Ft-In	G Ft-In	H Ft-In	L Ft-In	P Ft-In	M Ft-In
7x7	2	98	11	8½	7	18⅞	12½	1-10	1-7	4-3	8-8½	16-5	15-10	47-5
	3	147												55-0
	4	196	15	6										62-7
	5	245												70-2
	6	294												77-9
8x8	2	128	9	9	8	18⅞	15⅝	2-0	2-0	4-10	9-9	18-6	17-10	53-8
	3	192												62-4
	4	256	13	5										71-0
	5	320												79-8
	6	384												88-4
9x9	2	162	7	9½	9	18⅞	15⅝	2-2	2-4	5-4	10-2⅝	20-8	19-11	60-1
	3	243	11	5										69-10
	4	324												79-7
	5	405												89-4
10x10	2	200	5	10	10	18⅝	18⅛	2-5	2-8	5-11	11-10	22-8	21-10	66-2
	3	300	9	5										77-0
	4	400												87-10
	5	500												98-8

BILL OF REINFORCING STEEL FOR 44'-0" CULVERT

BARREL REINFORCEMENT

	BARS A Size	No.	Length Ft-In	Spc In	BARS A1 Size	No.	Length Ft-In	Spc In	BARS B Size	No.	Length Ft-In	Spc In	*4 BARS C No.	Length Ft-In	*5 BARS D & D1 No.	Length Bars D Ft-In	Spc In	*5 BARS D2 & D3 No.	Length Bars D2 Ft-In	Spc In
7x7	*6	84	16-5	13	*6	84	5-8	13	*6	84	16-9	13	58	47-2	92	2-10	7-0	12	46	2-10	7-0	12
	*6	84	24-0	13	*6	84	5-8	13	*6	84	24-0	13	86	47-2	92	2-10	7-0	12	92	2-10	7-0	12
	*6	84	31-7	13	*6	252	5-8	13	*6	84	32-7	13	113	47-2	92	2-10	7-0	12	138	2-10	7-0	12
	*6	84	39-2	13	*6	336	5-8	13	*6	84	40-6	13	140	47-2	92	2-10	7-0	12	184	2-10	7-0	12
	*6	84	46-11	13	*6	420	5-8	13	*6	84	50-7	13	167	47-2	92	2-10	7-0	12	230	2-10	7-0	12
8x8	*6	92	18-8	12	*6	92	6-3	12	*6	92	19-0¢	12	66	47-2	92	2-11	8-1	12	46	2-11	8-1	12
	*6	92	27-8	12	*6	184	6-3	12	*6	92	28-0¢	12	96	47-2	92	2-11	8-1	12	92	2-11	8-1	12
	*6	92	36-10	12	*6	276	6-3	12	*6	92	37-0¢	12	126	47-2	92	2-11	8-1	12	138	2-11	8-1	12
	*6	92	46-10	12	*6	368	6-3	12	*6	92	46-3	12	156	47-2	92	2-11	8-1	12	184	2-11	8-1	12
	*6	92	55-6	12	*6	460	6-3	12	*6	92	57-3¢	12	186	47-2	92	2-11	8-1	12	230	2-11	8-1	12
9x9	*6	100	20-11	11	*6	300	6-9	11	*6	102	21-3½	11	73	47-2	106	2-11	9-1	10½	53	2-11	9-1	10½
	*6	100	30-8	11	*6	200	6-9	11	*6	102	31-5½	11	106	47-2	106	2-11	9-1	10½	106	2-11	9-1	10½
	*6	100	40-5	11	*6	300	6-9	11	*6	102	41-7½	11	139	47-2	106	2-11	9-1	10½	159	2-11	9-1	10½
	*6	100	52-4	11	*6	400	6-9	11	*6	102	53-1	11	172	47-2	106	2-11	9-1	10½	212	2-11	9-1	10½
10x10	*7	78	23-2	14	*7	78	7-8	14	*7	80	23-7	14	80	47-2	124	3-0	10-2	9	62	3-0	10-2	9
	*7	78	34-0	14	*7	156	7-8	14	*7	80	34-10	14	116	47-2	124	3-0	10-2	9	124	3-0	10-2	9
	*7	78	47-5	14	*7	234	7-8	14	*7	80	48-8	14	152	47-2	124	3-0	10-2	9	186	3-0	10-2	9
	*7	78	58-3	14	*7	312	7-8	14	*7	80	59-11	14	188	47-2	124	3-0	10-2	9	248	3-0	10-2	9

WINGS AND CURBS REINFORCEMENT

	BARS E Size	No.	Length Ft-In	Spc In	BARS E1 Size	No.	Length Ft-In	Spc In	*4 BARS F No.	Length Ft-In	*4 BARS F1 No.	*4 BARS J No.	Length Ft-In	BARS O Size	No.	Length Ft-In	Spc In	*4 BARS P No.	Length Ft-In	*4 BARS P1 No.	Length Ft-In	*4 BARS N No.	Length Ft-In	*4 BARS M No.	Length Ft-In	*6 BARS X No.	Length Ft-In
7x7	*4	72	5-0	11	*4	72	8-0	11	4	17-4	28	2-9	32	14-2	*4	124	3-10	12	16	15-6	12	17-2	32	5-0	4	17-10	32	2-0
																							40	5-0	4	25-5	32	2-0
																							48	5-0	4	33-0	32	2-0
																							78	5-0	4	92-1	32	2-0
																							92	5-0	4	100-8	32	2-0
8x8	*5	68	5-6	10	*4	88	9-1	10	4	19-5	32	2-10	36	16-2	*4	72	4-5	12	16	17-6	12	19-2	36	5-1	4	20-1	36	2-0
																							54	5-1	4	28-9	36	2-0
																							72	5-1	4	37-5	36	2-0
																							84	5-1	4	97-7	36	2-0
																							108	5-1	4	106-3	36	2-0
9x9	*5	80	5-8	8	*4	120	10-1	8	4	21-7	36	2-11	44	15-3	*4	96	4-11	10	16	19-7	12	21-3	42	5-2	4	22-4	40	2-0
																							60	5-2	4	32-1	40	2-0
																							80	5-2	4	93-4	40	2-0
																							100	5-2	4	55-1	40	2-0
10x10	*6	104	6-2	6¢	*5	124	11-2	6¢	4	23-7	40	3-0	48	20-2	*5	96	5-6	11	16	21-6	12	23-2	46	5-3	4	34-7	44	2-0
																							62	5-3	4	35-5	44	2-0
																							90	5-3	4	67-9	44	2-0
																							110	5-3	4	58-7	44	2-0

QUANTITIES

OPENINGS SIZE (Feet)	OPENINGS No.	PER LINEAR FOOT OF BARREL REINF. STEEL Lbs.	PER LINEAR FOOT OF BARREL CONC. Cu. Yds.	44'-0" CULVERT REINF. STEEL Lbs.	44'-0" CULVERT CONC. Cu. Yds.
7x7	2	177.86	1.2866	9,786.8	80.54
	3	264.86	1.8570	14,055	117.33
	4	351.83	2.4154	18,142	144.12
	5	438.82	2.9736	22,237	170.91
	6	537.62	3.5322	26,874	197.71
8x8	2	210.50	1.6111	12,111	112.62
	3	313.82	2.2804	16,976	145.53
	4	417.34	2.9577	21,641	178.43
	5	533.77	3.6759	27,302	211.34
	6	637.20	4.3642	32,168	244.24
9x9	2	252.18	1.9560	14,912	136.09
	3	375.86	2.7870	20,736	176.58
	4	499.44	3.6181	26,571	216.20
	5	637.30	4.4491	33,059	255.80
10x10	2	288.05	2.3333	18,555	163.55
	3	445.05	3.3200	25,836	210.44
	4	610.35	4.3066	33,155	252.33
	5	756.04	5.2932	40,020	304.22

① Includes 1-1'-6" Lap Splice.
② Includes 1-2'-2" Lap Splice.
③ Includes 1-2'-7" Lap Splice.

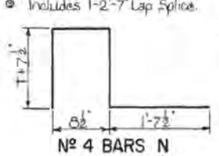

№ 4 BARS N (3" DIAM. PIN)

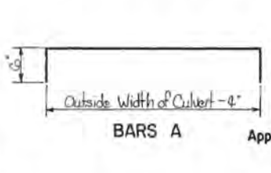

BARS A

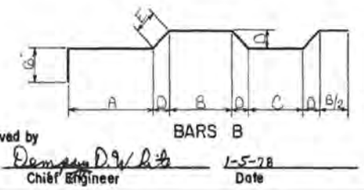

BARS B

Approved by Dan Chief Engineer
D.W. Luke 1-5-78 Date

DIMENSIONS FOR BARS B					
SIZE	PIN DIAM.	A	B	C	D	E
7x7	4½"	5'-5⅜"	3'-0⅝"	3'-1⅝"	4½"	6⅜"
8x8	4½"	6'-3⅜"	4'-0⅝"	3'-6⅜"	5½"	7⅜"
9x9	4½"	7'-1⅜"	4'-0⅝"	4'-0⅜"	5½"	8⅜"
10x10	5½"	7'-10⅜"	5'-3⅜"	4'-5⅜"	6⅜"	8⅜"

DIMENSIONS FOR BARS E				
SIZE	BAR SIZE	R	X	Y
7x7	*4	2½"	2'-7"	2'-5"
8x8	*5	2½"	2'-10"	2'-7½"
9x9	*5	2½"	2'-10"	2'-9½"
10x10	*6	3½"	3'-1½"	3'-0⅜"

CC·S·M·7-10·S·90°·1

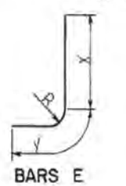

BARS E

Ⓐ *6 Bars X to be ¾"ϕ Smooth and Greased for 1'-0" of Lgth.

№ 4 BARS F & F1 (3" DIA. PIN)

REVISIONS		
DATE	DESCRIPTION	BY
1-25-72	Rev. Weep Hole Note	W.T.J.
	Rev. Slope Intercept	W.T.J.
6-8-72	Rev. General Notes for Steel	W.E.M.
# 27-59	Added Axle Steel	W.E.M.
12-15-66	Rev. General Notes	W.E.M.
4-3-64	DEFORMED DOWELS "X" TO SMOOTH	W.E.M.

STANDARD PLAN
MULTIPLE OPENINGS
REINF. CONCRETE BOX CULVERTS
STRAIGHT HDWLS. 2:1 SPILL SLOPE
7'x7' TO 10'x10'
DATED Sept. 13, 1962.

STATE OF LOUISIANA
DEPARTMENT OF HIGHWAYS
DESIGNED M. Yoshii DETAILED H. Allen TRACED C. Ford
CHECKED R. Marcon CHECKED R. Marcon CHECKED M. Yoshii
BRIDGE DESIGN SECTION

FOR INFORMATIONAL PURPOSES ONLY

10/29/2015 14:40

F.A.P.	STATE PROJECT	PARISH	SHEET NO.

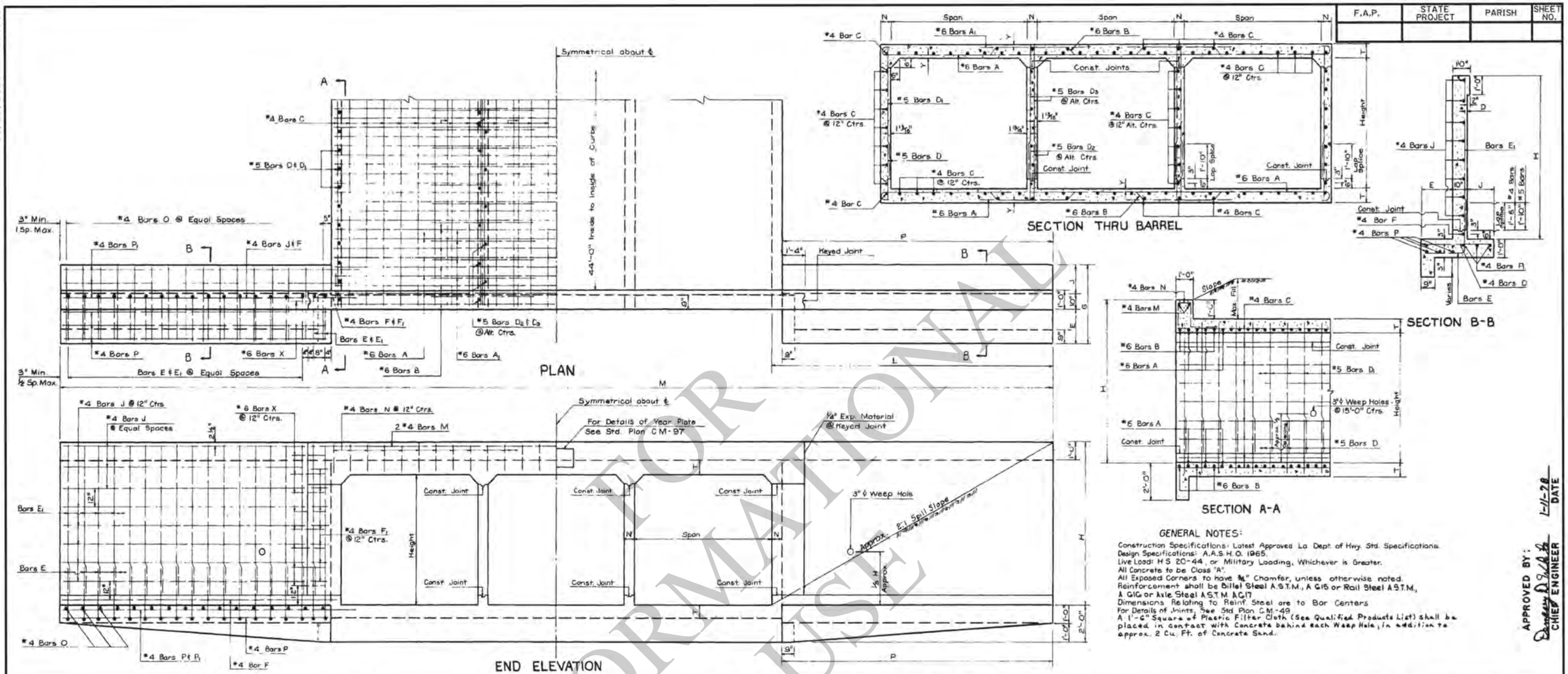

GENERAL NOTES:

Construction Specifications: Latest Approved La. Dept. of Hwy. Std. Specifications.
Design Specifications: A.A.S.H.O. 1965.
Live Load: H S 20-44 or Military Loading, Whichever is Greater.
All Concrete to be Class "A".
All Exposed Corners to have ¾" Chamfer, unless otherwise noted.
Reinforcement shall be Billet Steel A.S.T.M., A 615 or Rail Steel A.S.T.M., A 616 or Axle Steel A.S.T.M. A 617.
Dimensions Relating to Reinf. Steel are to Bar Centers.
For Details of Joints, See Std. Plan C.M.-49.
A 1'-6" Square of Plastic Filter Cloth (See Qualified Products List) shall be placed in contact with Concrete behind each Weep Hole, in addition to approx. 2 Cu. Ft. of Concrete Sand.

APPROVED BY: Dwight D. Gray
CHIEF ENGINEER
1-1-78
DATE

DIMENSIONS

OPENINGS SIZE Ft.	OPENINGS NO	OPENINGS AREA Sq Ft	MAX. FILL SLAB Ft.	MAX. FILL WALLS Ft.	BARREL T In.	BARREL N In.	BARREL Y In.	WINGS AND CURBS D In.	E Ft-In.	J Ft-In.	G Ft-In.	H Ft-In.	L Ft-In.	P Ft-In.	M Ft-In.
8x7	2	112	9	6	9	7	1⅞	1'8"	1-10	1-7	4-3	8-9	16-5	15-10	49-5
	3	168	13												58-0
	4	224													66-7
	5	280													75-2
	6	336													83-9
9x7	2	126	9	8	9½	8	1⅞	1'8"	1-10	1-7	4-3	8-9½	16-6	15-10	51-8
	3	189	12												61-4
	4	252													71-0
	5	315													80-8
9x8	2	144	8	5	9½	8	1⅞	1'-11⅛"	2-0	2-0	4-10	9-9½	18-7	17-11	55-10
	3	216	12												65-6
	4	288													75-2
	5	360													84-10

BILL OF REINFORCING STEEL FOR 44'-0" CULVERT

BARREL REINFORCEMENT

OPENINGS SIZE Ft.	OPENINGS NO	Bars A Size	No	Length Ft-In.	Spacing In.	Bars A1 Size	No	Length Ft-In.	Spacing In.	Bars B Size	No	Length Ft-In.	Spacing In.	*4 Bars C Size	No	Length Ft-In.	*5 Bars D & D1 No	Length Bars D Ft-In.	Length Bars D1 Ft-In.	*5 Bars D2 & D3 Spacing In.	No	Length Bars D2 Ft-In.	Length Bars D3 Ft-In.	Spacing In.
8x7	2	*6	92	18-9½	12	*6	92	6-2	12	*5	92	19-1¾	12	63	47-2	92	2-11	7-1	12	46	2-11	7-1	12
	3	*6	92	27-4½	12	*6	184	6-2	12	*5	92	28-1	12	92	47-2	92	2-11	7-1	12	92	2-11	7-1	12
	4	*6	92	35-11½	12	*6	276	6-2	12	*5	92	37-0½	12	121	47-2	92	2-11	7-1	12	138	2-11	7-1	12
	5	*6	92	①46-8½	12	*6	368	6-2	12	*5	92	①48-1¼	12	150	47-2	92	2-11	7-1	12	184	2-11	7-1	12
	6	*6	92	①55-3½	12	*6	460	6-2	12	*5	92	①57-0⅝	12	179	47-2	92	2-11	7-1	12	230	2-11	7-1	12
9x7	2	*6	100	21-0⅛	11	*6	100	6-9	11	*5	102	21-5¼	11	67	47-2	92	2-11	7-1	12	46	2-11	7-1	12
	3	*6	100	30-6⅛	11	*6	200	6-9	11	*5	102	31-6	11	98	47-2	92	2-11	7-1	12	92	2-11	7-1	12
	4	*6	100	40-4⅛	11	*6	300	6-9	11	*5	102	41-6⅜	11	129	47-2	92	2-11	7-1	12	138	2-11	7-1	12
	5	*6	100	①52-2⅜	11	*6	400	6-9	11	*5	102	①53-9⅝	11	160	47-2	92	2-11	7-1	12	184	2-11	7-1	12
9x8	2	*6	100	21-0⅛	11	*6	100	6-9	11	*5	102	21-5¼	11	70	47-2	92	2-11	8-1	12	46	2-11	8-1	12
	3	*6	100	30-6⅛	11	*6	200	6-9	11	*5	102	31-6	11	102	47-2	92	2-11	8-1	12	92	2-11	8-1	12
	4	*6	100	40-4⅛	11	*6	300	6-9	11	*5	102	41-6⅜	11	134	47-2	92	2-11	8-1	12	138	2-11	8-1	12
	5	*6	100	①52-2⅜	11	*6	400	6-9	11	*5	102	①53-9⅝	11	166	47-2	92	2-11	8-1	12	184	2-11	8-1	12

WINGS AND CURBS REINFORCEMENT

OPENINGS SIZE Ft.	OPENINGS NO	Bars E Size	No	Length Ft-In.	Spacing In.	Bars E1 Size	No	Length Ft-In.	Spacing In.	*4 Bars F No	Length Ft-In.	*4 Bars F1 No	Length Ft-In.	*4 Bars J No	Length Ft-In.	Bars O Size	No	Length Ft-In.	Spacing In.	*4 Bars P No	Length Ft-In.	*4 Bars R No	Length Ft-In.
8x7	2	*4	72	5-0	11	*4	72	8-1	11	4	17-4	28	2-9	32	14-2	*4	64	3-10	12	16	15-6	12	17-2
	3																						
	4																						
	5																						
	6																						
9x7	2	*4	72	5-0	11	*4	72	8-1	11	4	17-5	28	2-10	32	14-2	*4	64	3-10	12	16	15-6	12	17-2
	3																						
	4																						
	5																						
9x8	2	*5	88	5-6	10	*4	88	9-1	10	4	19-6	32	2-10	36	16-3	*4	72	4-5	12	16	17-7	12	19-3
	3																						
	4																						
	5																						

QUANTITIES

OPENINGS SIZE Ft.	OPENINGS NO	*4 Bars N Size	No	Length Ft-In.	*4 Bars M Spacing In.	No	Length Ft-In.	*6 Bars X ② No	Length Ft-In.	PER LINEAR FOOT OF BARREL REINF STEEL Lbs	PER LINEAR FOOT OF BARREL CONC. Cu. Yds.	44'-0" CULVERT REINF STEEL Lbs.	44'-0" CULVERT CONC. Cu. Yds.	OPENINGS SIZE Ft.	OPENINGS NO.
8x7	2					4	19-10	32	2-0	205.86	1.4583	11 287	98.22	8x7	2
	3					4	28-5	32	2-0	306.82	2.0957	16 038	128.77		3
	4					4	37-0	32	2-0	407.78	2.7330	20 782	159.32		4
	5					4	①47-1	32	2-0	521.76	3.3704	26 136	189.67		5
	6					4	①55-8	32	2-0	622.72	4.0077	30 880	220.42		6
9x7	2					4	22-1	32	2-0	237.37	1.7099	12 801	110.15	9x7	2
	3					4	31-9	32	2-0	355.28	2.4588	18 360	145.97		3
	4					4	①42-11	32	2-0	473.20	3.2078	23 922	181.75		4
	5					4	①52-7	32	2-0	605.31	3.9568	30 132	217.60		5
9x8	2					4	22-1	36	2-0	242.51	1.7840	13 649	121.08	9x8	2
	3					4	31-9	36	2-0	362.13	2.5576	19 288	158.05		3
	4					4	①42-11	36	2-0	481.75	3.3313	24 930	194.98		4
	5					4	①52-7	36	2-0	615.58	4.1049	31 219	231.94		5

① *6 Bars "X" to be ⅜" ϕ Smooth and Greased for 1'-0" of Length.
② Includes 1-1'-6" Lap Splice.
③ Includes 1-2'-2" Lap Splice.

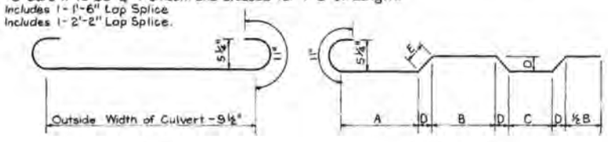

*6 BARS B

DIMENSIONS FOR BARS B

SIZE	PIN. DIAM.	A	B	C	D	E
8'x7'	4½"	5'-11⅝"	4'-1⅜"	3'-6⅜"	5½"	7⅜"
9'x7'	4½"	6'-9⅜"	4'-8⅛"	4'-0⅛"	5½"	8⅛"
9'x8'	4½"	6'-9⅜"	4'-8⅛"	4'-0⅛"	5½"	8⅛"

DIMENSIONS FOR BARS E

SIZE	BAR SIZE	R	X	Y
8'x7'	*4	2½"	2'-7"	2'-5"
9'x7'	*4	2½"	2'-7"	2'-5"
9'x8'	*5	2⅝"	2'-10⅜"	2'-7⅛"

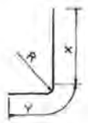

BARS E

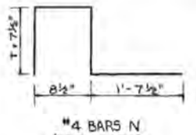

*4 BARS N (3" Diam. Pin)

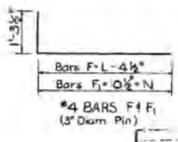

*4 BARS F & F1 (3" Diam. Pin)

DATE	REVISIONS	BY
1-11-78	Rev. Weep Hole Note.	W.T.J.
1-28-76	Rev. Slope Intercept	W.T.J.
6-8-72	Rev. General Notes for Steel	W.E.M.

STANDARD PLAN
MULTIPLE OPENINGS
REINF. CONCRETE BOX CULVERT
STRAIGHT HDWLS. 2:1 SPILL SLOPE
8'x7' 9'x7' 9'x8'
DATED: Dec. 19 1969

STATE OF LOUISIANA
DEPARTMENT OF HIGHWAYS

DESIGNED W. E. M. DETAILED J. R. TRACED M. B. R.
CHECKED N. K. B. CHECKED C. D. J. CHECKED W. E. M.
IN CHARGE OF

C·C·S·M·8-9·R·90°-1

IP_PWP:dms09544\CCSM8-9R90_1.dgn

FOR INFORMATIONAL USE

F.A.P.	STATE PROJECT	PARISH	SHEET NO.

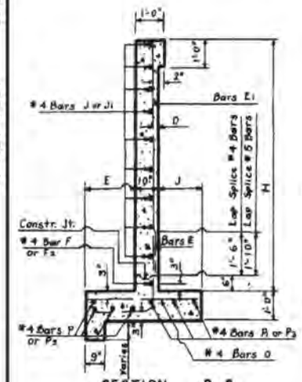

SECTION B-B

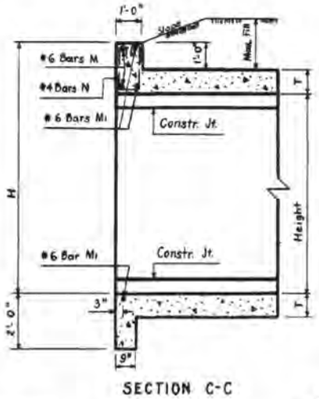

SECTION C-C

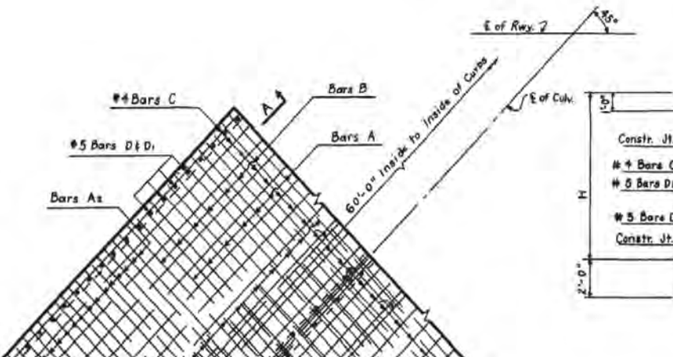

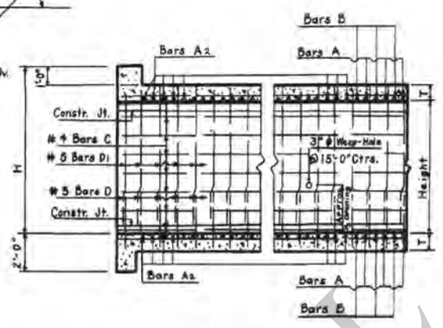

SECTION A-A

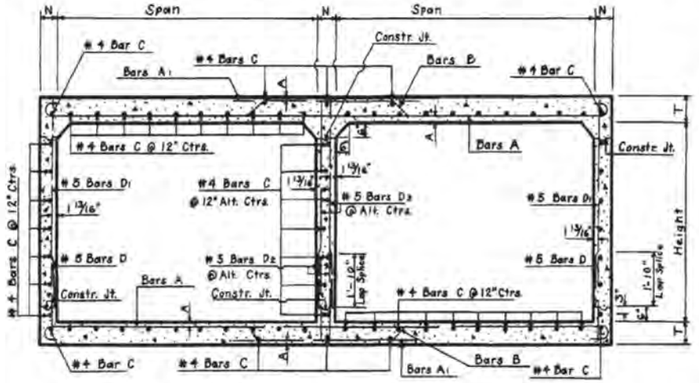

SECTION THRU BARREL

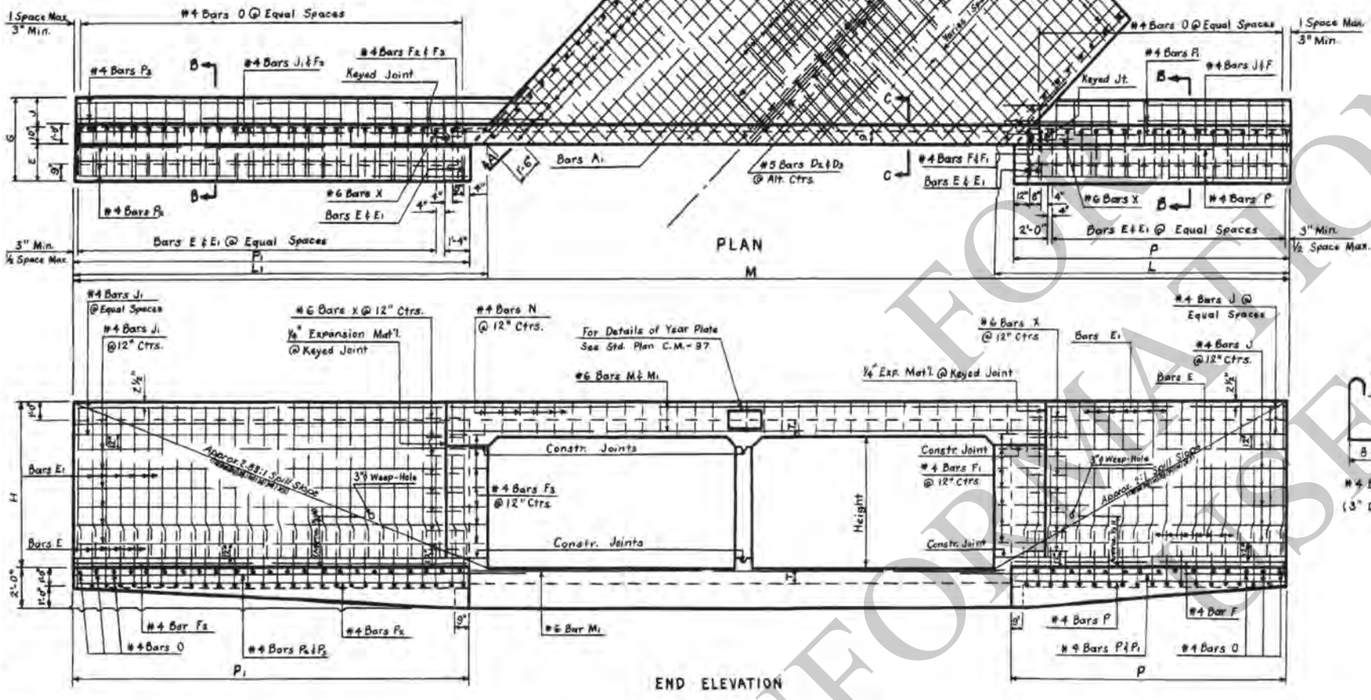

PLAN

END ELEVATION

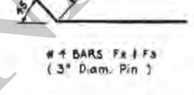

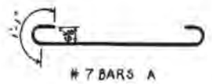

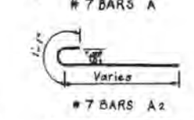

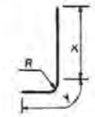

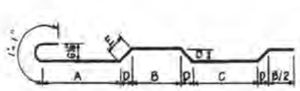

DIMENSIONS FOR BARS E				
Opening	Bar Size	R	X	Y
10'x 7'	#4	2 1/4"	2'-7"	2'-6"
10'x 8'	#5	2 13/16"	2'-10⅝"	2'-7⅞"
10'x 9'	#5	2 13/16"	2'-10⅝"	2'-9⅛"

DIMENSIONS FOR BARS D					
SIZE	A	B	C	D	E
10'x7'	7'-5⅛"	5'-1⅞"	4'-5⅛"	6 1/8"	8 5/8"
10'x8'	7'-6⅛"	5'-2⅜"	4'-5⅛"	6 1/8"	8 5/8"
10'x9'	7'-6⅛"	5'-2⅜"	4'-5⅛"	6 1/8"	8 5/8"

DIMENSIONS																								QUANTITIES FOR 60'-0" ALONG ℄ OF CULVERT	
OPENINGS			MAX. FILL		BARREL			WINGS AND CURBS																PER LINEAR FOOT OF BARREL	TOTAL QUANTITIES
SIZE	NO	AREA	SLAB	WALL	T	N	A	E	J	G	D	H	L	L1	P	P1	M							STEEL	CONC.	STEEL	CONC. @
FT.		SQ. FT.	FT.	FT.	IN.	IN.	IN.	FT-IN.	FT-IN.	FT-IN.	IN.	FT-IN.	FT-IN.	FT-IN.	FT-IN.	FT-IN.	FT-IN.							LBS.	CU. YDS.	LBS.	CU. YDS.
10x7	2	140	6	8	10	8	1 9/16	1-11	1-8	4-5	1¾	8-10	16-10¾	23-8⅝	15-11	22-9	69-9 3/8							270.50	1.8951	19816	138.92
	3	210															84-10 3/8							405.93	2.7356	29456	213.83
	4	280															99-11 3/8							559.47	3.5761	38925	268.73
	5	350															115-0 3/8							694.30	4.4167	50713	323.64
10x8	2	160	5	6	10	9	1 13/16	2-0	2-0	4-10	1 13/16	9-10	18-5⅝	26-9¾	17-5	25-9	74-7 3/8							277.38	2.0586	20841	177.36
	3	240	10														89-10 1/16							415.11	2.9537	30477	235.71
	4	320															108-0½							570.94	3.8488	41164	294.06
	5	400															120-2 7/8							708.67	4.7438	52149	352.40
10x9	2	180	5	5	10	9	1 13/16	2-2	2-4	5-4	1 13/16	10-10	20-4⅝	29-0⅝	19-4	28-0	78-9 3/8							287.96	2.1420	22449	191.48
	3	270	10														94-0 1/16							423.21	3.0648	32307	251.57
	4	360															109-2½							588.56	3.9877	43216	311.67
	5	450															124-4 7/8							729.81	4.9105	54424	371.76

BILL OF REINFORCING STEEL FOR 60'-0" CULVERT

OPENINGS	BARS A				BARS A1				BARS A2					BARS B			#5 BARS D & D1				#5 BARS D2 & D3				#4 BARS C	BARS E			BARS E1			#4 BARS F		#4 BARS F1		#4 BARS F2		#4 BARS F3		#4 BARS J		#4 BARS J1		#4 BARS O		#4 BARS P		#4 BARS P1		#4 BARS P2		#4 BARS P3		#4 BARS N		#6 BARS M		#6 BARS M1		#6 BARS X Ⓐ	
SIZE	NO.	SIZE	LENGTH FT-IN.	SP. IN.	SIZE	NO.	LENGTH FT-IN.	SP. IN.	SIZE	NO.	SHORT BAR FT-IN.	VARIATION IN.	LONG BAR FT-IN.	SP. IN.	SIZE	NO.	LENGTH FT-IN.	SP. IN.	NO.	LENGTH BARS D FT-IN.	LENGTH BARS D1 FT-IN.	SP. IN.	NO.	LENGTH BARS D2 FT-IN.	LENGTH BARS D3 FT-IN.	SP. IN.	NO.	*LENGTH FT-IN.	SIZE	NO.	LENGTH FT-IN.	SP. IN.	SIZE	NO.	LENGTH FT-IN.	SP. IN.	NO.	LENGTH FT-IN.	NO.	LENGTH FT-IN.	NO.	LENGTH FT-IN.	NO.	LENGTH FT-IN.	NO.	LENGTH FT-IN.	NO.	LENGTH FT-IN.	NO.	LENGTH FT-IN.	NO.	LENGTH FT-IN.	NO.	LENGTH FT-IN.	NO.	LENGTH FT-IN.	NO.	LENGTH FT-IN.	NO.	LENGTH FT-IN.	NO.	LENGTH FT-IN.	NO.	LENGTH FT-IN.
10x7	2	#7	6'8	14	#7	120	7-7	7/14	#7	140	2-7	7.0000	22-5	7	#7	70	23-8½	14	126	3-0	7-2	12	63	3-0	7-2	12	71	63-10	#4	94	5-1	10	#4	94	8-2	10	2	17-0	14	3-0	2	25-1	14	3-7	18	13-7	18	21-1	76	4-0	12	8	15-7	6	16-9	8	22-5	6	26-4	62	4-9	4	33-11	6	30-7	32	2-0
	3	#7	8'4	14	#7	176	7-7	7/14	#7	212	2-7	7.0000	32-11	7	#7	52	34-9½	14	126	3-0	7-2	12	126	3-0	7-2	12	104	63-10																																92	4-9	4	51-2⅝	6	47-10⅝	32	2-0
	4	#7	10'0	14	#7	264	7-7	7/14	#7	288	2-7	7.0000	43-5	② 7	#7	34	48-5½	② 14	126	3-0	7-2	12	189	3-0	7-2	12	137	63-10																																122	4-9	4	66-3⅝	6	62-1⅝	32	2-0
	5	#7	11'8	14	#7	700	7-7	7/14	#7	360	2-7	7.0000	54-6	② 7	#7	14	59-6½	② 14	126	3-0	7-2	12	252	3-0	7-2	12	170	63-10																																152	4-9	4	81-4⅝	6	78-0⅝	32	2-0
10x8	2	#7	7'0	14	#7	118	7-7	7/14	#7	140	2-8	7.0000	22-6	7	#7	70	23-11½	14	126	3-0	8-2	12	63	3-0	8-2	12	74	63-10																																62	4-9	4	34-3	6	30-11	36	2-0
	3	#7	8'8	14	#7	212	7-7	7/14	#7	212	2-8	7.0000	33-0	7	#7	52	35-1⅝	14	126	3-0	8-2	12	126	3-0	8-2	12	108	63-10																																92	4-9	4	51-7⅝	6	48-6⅝	36	2-0
	4	#7	10'4	14	#7	288	7-7	7/14	#7	288	2-8	7.0000	44-1	② 7	#7	32	48-10⅝	② 14	126	3-0	8-2	12	189	3-0	8-2	12	142	63-10																																124	4-9	4	66-10⅝	6	63-6⅝	36	2-0
	5	#7	12'0	14	#7	692	7-7	7/14	#7	360	2-8	7.0000	54-7	② 7	#7	16	60-0½	② 14	126	3-0	8-2	12	252	3-0	8-2	12	176	63-10																																154	4-9	4	82-0⅝	6	78-9⅝	36	2-0
10x9	2	#7	7'0	14	#7	118	7-7	7/14	#7	140	2-8	7.0000	22-6	7	#7	70	23-11½	14	144	3-0	9-2	10½	72	3-0	9-2	10½	77	63-10																																62	4-9	4	34-3	6	30-11	40	2-0
	3	#7	8'8	14	#7	212	7-7	7/14	#7	212	2-8	7.0000	33-0	7	#7	52	35-1⅝	14	144	3-0	9-2	10½	144	3-0	9-2	10½	112	63-10																																92	4-9	4	51-7⅝	6	48-6⅝	40	2-0
	4	#7	10'4	14	#7	288	7-7	7/14	#7	288	2-8	7.0000	44-1	② 7	#7	32	48-10⅝	② 14	144	3-0	9-2	10½	216	3-0	9-2	10½	147	63-10																																124	4-9	4	66-10⅝	6	63-6⅝	40	2-0
	5	#7	12'0	14	#7	692	7-7	7/14	#7	360	2-8	7.0000	54-7	② 7	#7	16	60-0½	② 14	144	3-0	9-2	10½	288	3-0	9-2	10½	182	63-10																																154	4-9	4	82-0⅝	6	78-9⅝	40	2-0

① Includes one 1'-6" Lap Splice.
② Includes one 2'-7" Lap Splice.
③ Includes one 2'-2" Lap Splice.
④ Does not Include Lap Splice. When Length of Bar Exceeds 40'-0" add 2'-7" Lap Splice.

Ⓐ #6 Bars X to be ¾" ϕ Smooth and Greased for 1'-0" of Length.

APPROVED BY: Dongsey D. Willis 1-11-78
CHIEF ENGINEER DATE

@ Quantities do not Include Expansion Joint Block.

General Notes:
CONSTRUCTION SPECIFICATIONS: Latest Approved La. Dept. of Highways Std. Specs.
DESIGN SPECIFICATIONS: A.A.S.H.O. 1969 as amended by Int. Spec. 1971.
LIVE LOAD: HS 20-44 or Military Loading Whichever is Greater.
All Concrete to be Class "A"
All Exposed Corners to have ¾" Chamfer, Unless Otherwise Noted.
Reinforcement Shall Be Billet Steel A.S.T.M. A615 or Rail-Steel A.S.T.M. A616 or Axle-Steel A.S.T.M. A617.
Dimensions relating to Reinforcing Steel are to Bar Ctrs.
A 1'-0" Square of Plastic Filter Cloth (See Qualified Products List*) shall be placed in contact with Concrete behind each Weep-Hole, in addition to approx. 2 Cu. Ft. of Concrete Sand.
For Details of Joints, See Standard Plan CM-49

STANDARD PLAN
MULTIPLE OPENINGS
REINFORCED CONCRETE BOX CULVERTS
STRAIGHT WINGS 45° CROSSING
2:1 SPILL SLOPE NORMAL TO CHANNEL
DATED March 20 19 72 10'x 7' TO 10'x 9'

REVISIONS		
DATE	DESCRIPTION	BY
1-11-78	Rev. Weep Hole Note	W.T.J.
6-10-75	Revised Slope Intercept	W.T.J.
6-8-72	Rev. General Notes for Steel	W.E.M.

STATE OF LOUISIANA
DEPARTMENT OF HIGHWAYS

DESIGNED	DETAILED J.D. BACCI	TRACED E.B. ALLEN
CHECKED	CHECKED H. BAROUSSE	CHECKED J.D. BACCI

CCSM10R45°1

28-NOV-2007 09:48

R:\Standard Plans\English\Old Sheets\CCSM10R45_1.dgn

FOR INFORMATIONAL PURPOSES ONLY

28-NOV-2007 09:49

F.A.P.	STATE PROJECT	PARISH	SHEET NO.

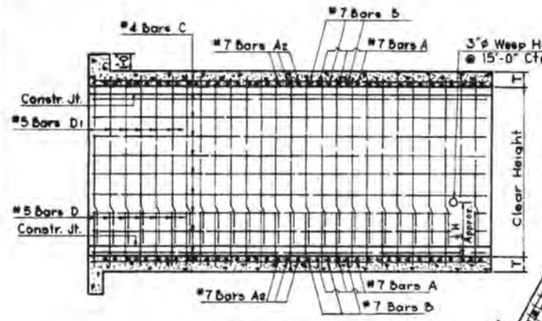

SECTION A-A

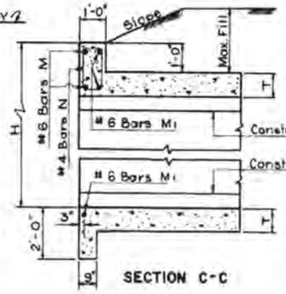

SECTION C-C

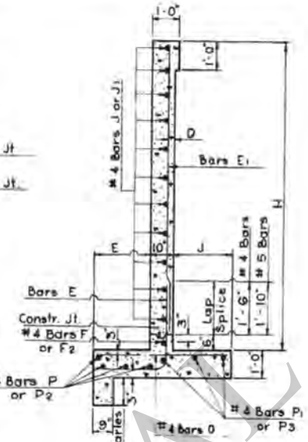

SECTION B-B

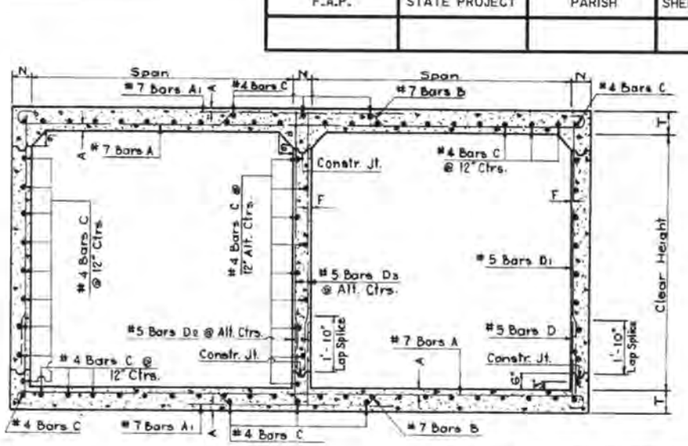

SECTION THRU BARREL

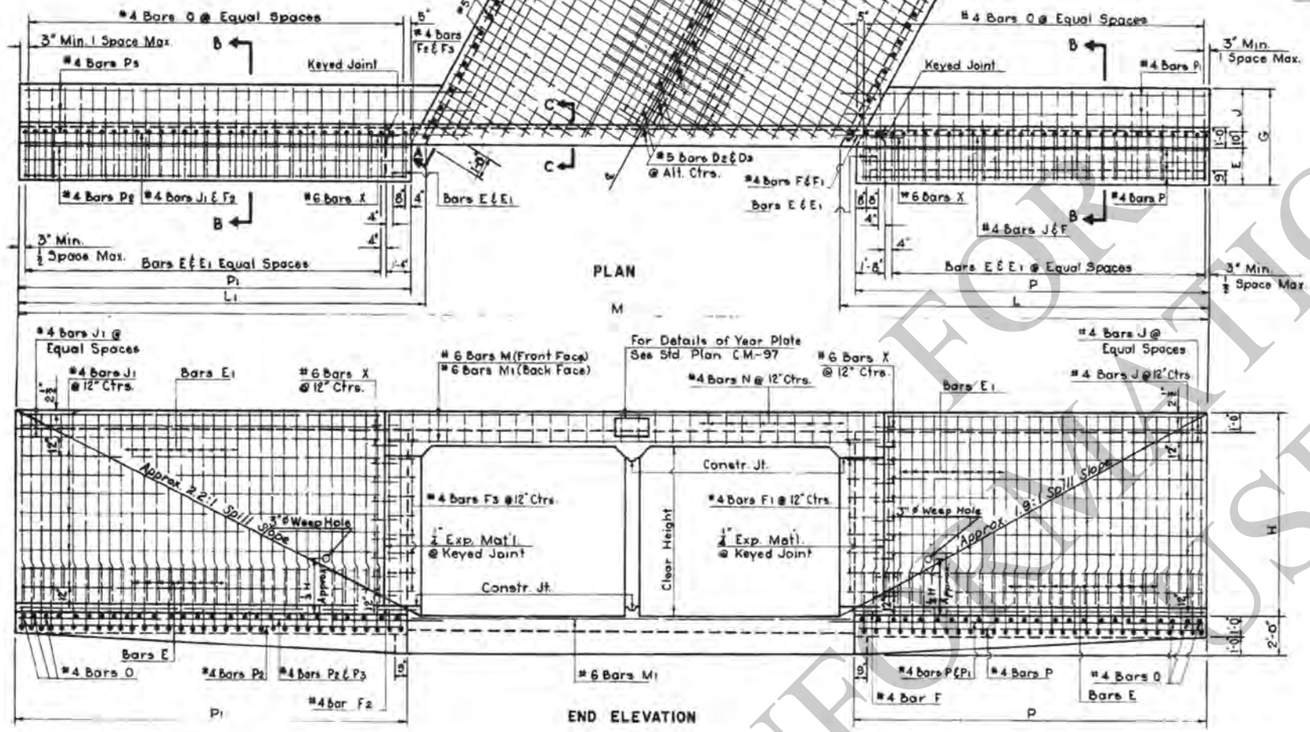

PLAN

END ELEVATION

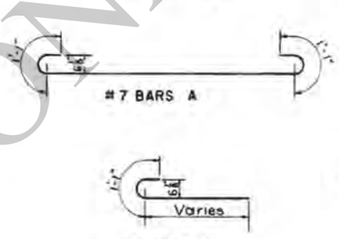

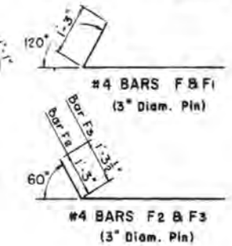

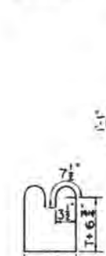

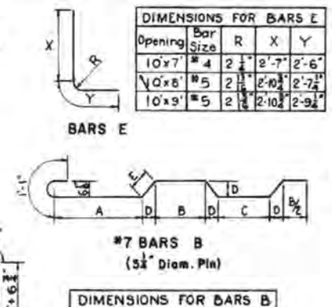

DIMENSIONS FOR BARS E				
Opening	Bar Size	R	X	Y
10'x7'	#4	2 1/2"	2'-7"	2'-6"
10'x8'	#5	2 1/2"	2'-10 1/2"	2'-7 1/2"
10'x9'	#5	2 1/2"	2'-10 1/2"	2'-9 1/2"

DIMENSIONS FOR BARS B					
Size	A	B	C	D	E
10x7	7'-5 1/8"	5'-1 1/8"	4'-5 5/8"	6 1/2"	8 3/4"
10x8	7'-6 11/16"	5'-2 1/8"	4'-5 5/8"	6 1/2"	8 3/4"
10x9	7'-6 11/16"	5'-2 1/8"	4'-5 5/8"	6 1/2"	8 3/4"

DIMENSIONS																								QUANTITIES FOR 44'-0" ALONG ℄ OF CULVERT			
Openings			Max. Fill	Barrel				Wings and Curbs																Per Linear Foot of Barrel		Total Quantities	
Size	No	Area	Slab(Wall)	T	N	A	F	E	J	G	D	H	L	L1	P	P1	M	Steel	Concrete	Steel	Concrete
Feet		Sq. Ft.	Feet	In.	In.	In.	In.	Ft-In	Ft-In	Ft-In	In.	Ft-In	Ft-In	Ft-In	Ft-In	Ft-In	Ft-In	Lbs.	Cu. Yds.	Lbs.	Cu. Yds.
10 X 7	2	140	6														59-9 1/2	270.50	1.8951	15,040	122.95
	3	210	10	8	10	8	1 15/16	1 15/16	1-11	1-8	4-5	1 3/4	8-10	16-6 1/4	19-5 1/4	15-9	18-8	84-5 5/8	405.93	2.7356	21,910	163.55
	4	280																72-1 3/8	559.47	3.5761	29,647	204.22
	5	350																96-9 1/2	694.90	4.4167	37,518	244.85
10 X 8	2	160	5															64-8 5/8	277.38	2.0566	15,876	136.37
	3	240	10	8	10	9	1 15/16	1 15/16	2-0	2-0	4-10	1 13/16	9-10	18-8 3/8	22-0 3/8	17-10	21-2	77-1 1/8	415.11	2.9537	27,989	181.54
	4	320																89-6 3/8	570.94	3.8488	30,666	224.71
	5	400																101-11 5/8	708.67	4.7438	38,644	267.89
10 X 9	2	180	5															66-6 1/8	267.96	2.1420	17,138	150.33
	3	270	10	8	10	8	1 15/16	1 15/16	2-2	2-4	5-4	1 13/16	10-10	21-1 3/8	23-5 3/8	20-3	22-7	80-11 3/4	429.21	3.0648	24,469	194.79
	4	360																93-4 5/8	588.56	3.9877	32,302	239.25
	5	450																105-9 7/8	729.81	4.9105	40,437	283.71

BILL OF REINFORCING STEEL FOR 44'-0" CULVERT

BARREL REINFORCEMENT

OPENINGS	#7 BARS A				#7 BARS A1				#7 BARS A2							#7 BARS B				#5 BARS D2 & D1				#5 BARS D2 & D3				#4 BARS C		
SIZE	No.	No.	LENGTH	SP.	No.	LENGTH	SP.	No.	SHORT BAR	VARIATION	LONG BAR	SP.	No.	LENGTH	SP.	No.	LGTH. BARS D2	LGTH. BARS D1	SP.	No.	LGTH. BARS D2	LGTH. BARS D3	SP.	No.	LENGTH	SP.
FT.			FT. - IN.	IN.		FT. - IN.	IN.		FT. - IN.	FT.-IN.	FT. - IN.	IN.		FT. - IN.	IN.		FT-IN.	FT-IN.	IN		FT-IN.	FT-IN.	IN		FT. - IN.	IN.
10X7	2	58	23 - 3 1/2	14	86	7 - 7	14	80	2 - 8	12.1053	21-10	7	58	23 - 0 1/2	14	94	3-0	7-2	12	47	3-0	7-2	12	71	47-5	
	3	46	33 - 11 3/8	14	192	7 - 7	14	124	2 - 8	12.1333	33-0	7	46	34 - 9 3/8	14	94	3-0	7-2	12	94	3-0	7-2	12	104	47-5	
	4	36	47 - 2 1/2	14	316	7 - 7	14	164	2 - 8	12.1250	43-1	7	36	48 - 5 1/2	14	94	3-0	7-2	12	141	3-0	7-2	12	137	47-5	
	5	26	57 - 10 1/2	14	472	7 - 7	14	208	2 - 8	12.1176	54-2	7	26	59 - 6 1/2	14	94	3-0	7-2	12	188	3-0	7-2	12	170	47-5	
10X8	2	58	23 - 6 3/8	14	86	7 - 7	14	80	2 - 9	12.1053	21-11	7	58	23-11 1/2	14	94	3-0	8-2	12	47	3-0	8-2	12	74	47-5	
	3	46	34 - 3 1/2	14	192	7 - 7	14	124	2 - 9	12.1333	33-1	7	46	35 - 1 1/2	14	94	3-0	8-2	12	94	3-0	8-2	12	106	47-5	
	4	36	47 - 7 1/2	14	316	7 - 7	14	164	2 - 9	12.1250	43-2	7	36	48-10 1/2	14	94	3-0	8-2	12	141	3-0	8-2	12	142	47-5	
	5	26	58 - 4 1/2	14	472	7 - 7	14	208	2 - 9	12.1176	54-3	7	26	60 - 0 1/2	14	94	3-0	8-2	12	188	3-0	8-2	12	176	47-5	
10X9	2	58	23 - 6 3/8	14	86	7 - 7	14	80	2 - 9	12.1053	21-11	7	58	23-11 1/2	14	106	3-0	9-2	10 1/2	53	3-0	9-2	10 1/2	77	47-5	
	3	46	34 - 3 1/2	14	192	7 - 7	14	124	2 - 9	12.1333	33-1	7	48	35- 1 1/2	14	106	3-0	9-2	10 1/2	106	3-0	9-2	10 1/2	112	47-5	
	4	36	47 - 7 1/2	14	316	7 - 7	14	164	2 - 9	12.1250	43-2	7	36	48-10 1/2	14	106	3-0	9-2	10 1/2	159	3-0	9-2	10 1/2	147	47-5	
	5	26	58 - 4 1/2	14	472	7 - 7	14	208	2 - 9	12.1176	54-3	7	26	60 - 0 1/2	14	106	3-0	9-2	10 1/2	212	3-0	9-2	10 1/2	182	47-5	

WINGS AND CURBS REINFORCEMENT

SIZE	BARS E				BARS E1				#4 BARS F	#4 BARS F1	#4 BARS F2	#4 BARS F3	#4 BARS J	#4 BARS J1	#4 BARS O	#4 BARS P	#4 BARS P1	#4 BARS P2	#4 BARS P3	#4 BARS N	#6 BARS M	#6 BARS M1	#6 BARS X Ⓐ	
	No.	LENGTH	SP.		No.	LENGTH	SP.		No.	LENGTH	No.	LENGTH	No.	LENGTH	No.	LENGTH	No.	LENGTH	No.	LENGTH	No.	LENGTH	No.	LENGTH	No.	LENGTH
		FT-IN.	IN			FT-IN.	IN			FT-IN.		FT-IN.		FT-IN.		FT-IN.		FT-IN.		FT-IN.		FT-IN.		FT-IN.		FT-IN.
#4	84	5-1	10	#4	84	8-2	10	2	17-0	14	2-10	2	20-8	14	3-3	18	15-9	18	17-0	70	4-0	12	8	15-5	G	16-9	8	18-4	G	21-4
#5	88	5-6	11	#4	88	9-2	11	2	19-2	16	2-11	2	23-3	16	3-4	20	15-10	20	19-6	78	4-5	12	8	17-6	G	18-10	8	20-10	G	24-0
#5	128	5-8	8	#4	128	10-2	8	2	21-7	18	2-11	2	24-8	18	3-4	22	18-3	22	20-11	102	4-11	10	8	19-11	G	21-2	8	22-3	G	25-7

OPENINGS	#4 BARS N			#6 BARS M			#6 BARS M1			#6 BARS X Ⓐ		
SIZE	No.	LENGTH	SP.	No.	LENGTH	SP.	No.	LENGTH	SP.	No.	LENGTH	SP.
FT.		FT-IN	IN		FT-IN	IN		FT-IN	IN		FT-IN.	IN
10X7	50	4-9	4	27-10	G	25-0	32	2-0				
	74	4-9	4	42-4	G	37-4	32	2-0				
	100	4-9	4	56-8	G	51-9	32	2-0				
	124	4-9	4	66-11	G	64-1	32	2-0				
10X8	50	4-9	4	28-1	G	25-3	36	2-0				
	76	4-9	4	42-8	G	37-8	36	2-0				
	100	4-9	4	55-1	G	52-3	36	2-0				
	126	4-9	4	67-6	G	64-8	36	2-0				
10X9	50	4-9	4	28-1	G	25-3	40	2-0				
	76	4-9	4	42-8	G	37-8	40	2-0				
	100	4-9	4	55-1	G	52-3	40	2-0				
	126	4-9	4	67-6	G	64-8	40	2-0				

① Includes 1-2'-7" Lap Splice.
② Includes 1-1'-6" Lap Splice.
③ Includes 1-2'-2" Lap Splice.
④ Does not Include Lap Splice. When Bar Length Exceeds 40'-0", Add 1-2'-7" Lap Splice.

Ⓐ #C Bars X to be 3/4" Smooth and Greased for 1'-0" of Length.

APPROVED BY:
Dewey D. White
CHIEF ENGINEER
1-11-78
DATE

GENERAL NOTES:
Design Specifications: A.A.S.H.O. 1969 as Amended to 1971.
Construction Specifications: Latest Approved Louisiana Department of Highways Standard Specifications.
All Concrete to be Class "A".
All Exposed Corners to Have 3/4" Chamfer Unless Otherwise Noted.
Reinforcement Shall be Intermediate or Hard Grade A.S.T.M. A15, or Axle Steel A.S.T.M. A160, or Rail Steel A.S.T.M. A16, Conforming to A.S.T.M. A305. Dimensions Relating to Reinforcing Steel are to Bar Centers.
A 1'-6" Square of Plastic Filter Cloth (See Qualified Products List) shall be placed in contact with Concrete behind each Weep Hole, in addition to approx. 2 Cu.Ft. of Concrete Sand.
For Details of Joints, See Standard Plan CM-49

CC-S-M-10-R-60°-1

REVISIONS		
DATE	DESCRIPTION	BY
1-11-78	Rev. Weep Hole Note	W.T.J
8-1-75	Rev. Spill Slope	W.T.J

STANDARD PLAN
MULTIPLE OPENINGS
REINFORCED CONCRETE BOX CULVERTS
STRAIGHT WINGS 60° CROSSING
2:1 SPILL SLOPE NORMAL TO CHANNEL
DATED May 25 1979 10'x7', 10'x8' & 10'x9'

STATE OF LOUISIANA
DEPARTMENT OF HIGHWAYS

DESIGNED	DETAILED Barousse	TRACED A.L Carrick
CHECKED	CHECKED Bacci	CHECKED Barousse

R:\Standard Plans\English\Old Sheets\CCSM10R60_1.dgn

FOR INFORMATIONAL USE ONLY

6/26/2020 15:00

F.A.P.	STATE PROJECT	PARISH	SHEET NO.

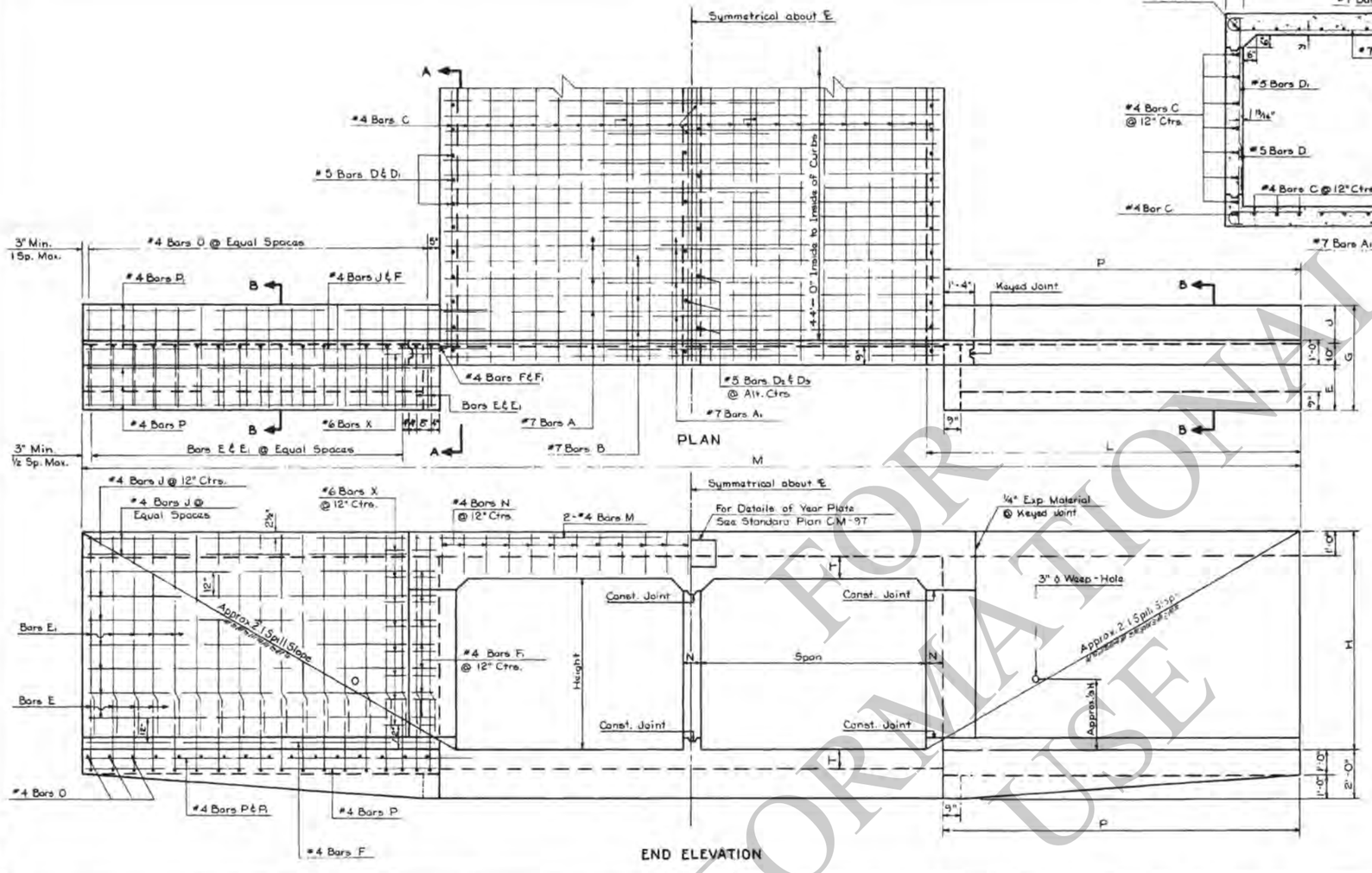

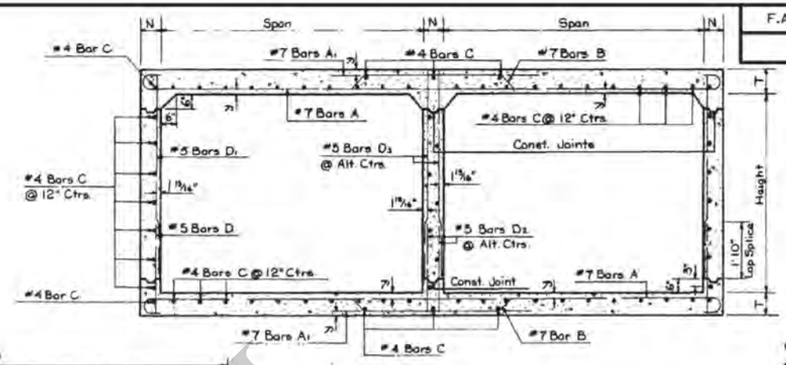

SECTION THRU BARREL

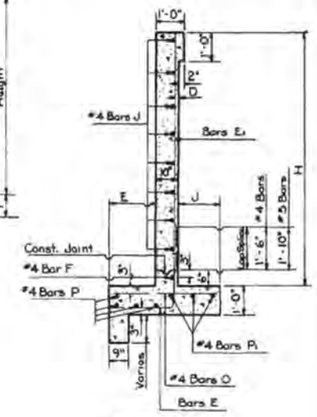

SECTION B-B

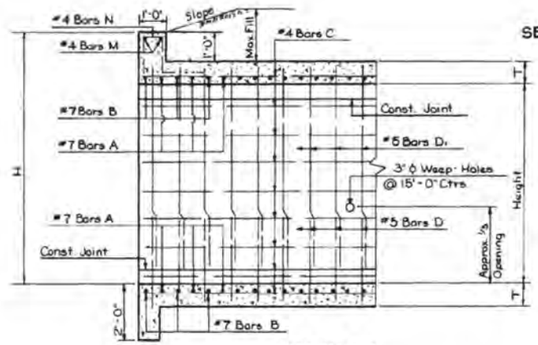

SECTION A-A

GENERAL NOTES:

Construction Specifications: Latest Approved La. Dept. of Highway Std. Specifications.
Design Specifications: A.A.S.H.O. 1969.
Live Load: H S 20-44 or Military Loading, Whichever is Greater.
All Concrete to be Class "A".
All Exposed Corners to have ¾" Chamfer, unless Otherwise noted.
Reinforcement shall be Billet-Steel A.S.T.M. A615 or Rail-Steel A.S.T.M. A616 or Axle-Steel A.S.T.M. A617.
Dimensions Relating to Reinf. Steel are to Bar Centers.
For Details of Joints See Std. Plan C.M.-49.
A 16" Square of Plastic Filter Cloth (See Qualified Products List) shall be placed in contact with Concrete behind each Weep Hole, in addition to approx. 2 Cu. Ft. of Concrete Sand.
For Detail of Joints, See Std. Plan C.M.-49.

APPROVED BY: James Dodd 1-5-74
CHIEF ENGINEER
DATE

| DIMENSIONS | | |

F.A.P.	STATE PROJECT	PARISH	SHEET NO.

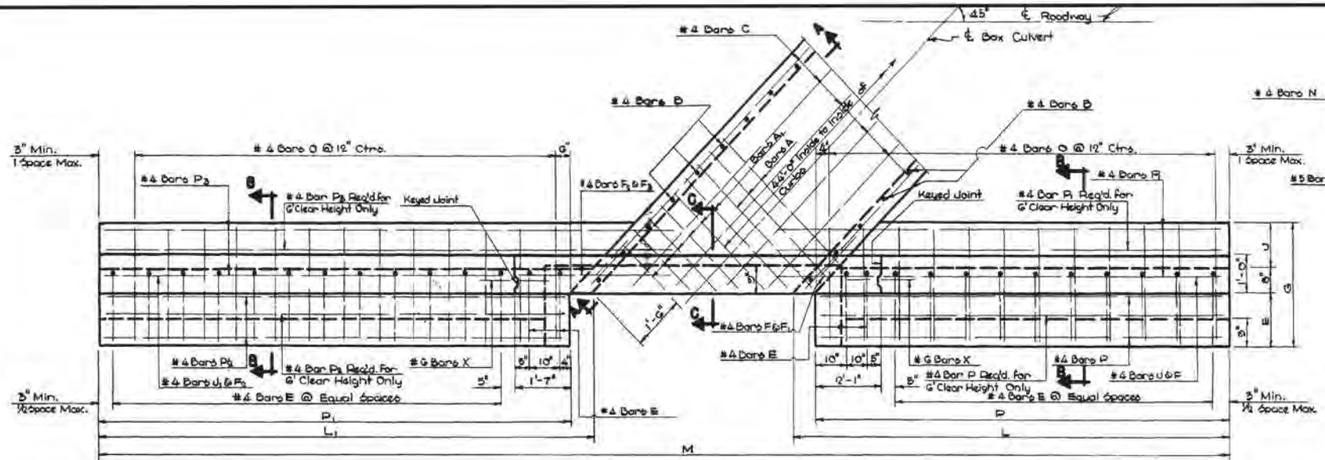

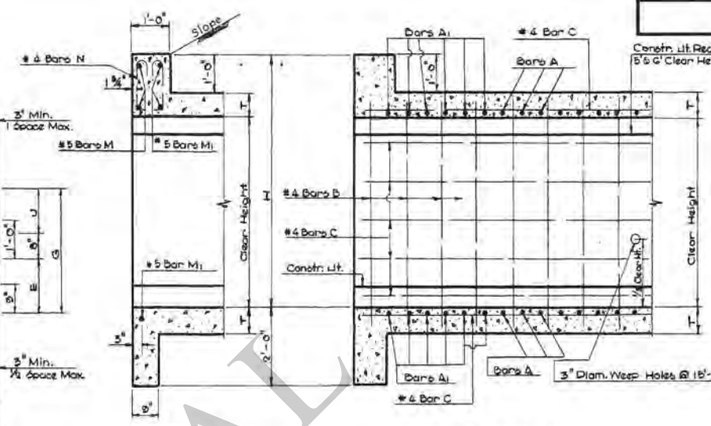

SECTION C-C

SECTION A-A

GENERAL NOTES:

CONSTRUCTION SPECIFICATIONS: LATEST APPROVED LA. DEPT. OF HIGHWAY STANDARD SPECIFICATIONS.
DESIGN SPECIFICATIONS: A.A.S.H.O. 1961 AS AMENDED BY INT. SPEC. 1964 LIVE LOAD HS20-44 OR MILITARY LOADING, WHICHEVER IS GREATER
ALL CONCRETE TO BE CLASS "A"
ALL EXPOSED CORNERS TO HAVE 3/4" CHAMFER UNLESS OTHERWISE NOTED.
REINFORCEMENT SHALL BE BILLET-STEEL A.S.T.M. A615 OR RAIL-STEEL A.S.T.M. A616 OR AXLE-STEEL A.S.T.M. A617.
DIMENSIONS RELATING TO REINFORCING STEEL ARE TO BAR CENTERS.
A 1'-6" SQUARE OF PLASTIC FILTER CLOTH (SEE QUALIFIED PRODUCTS LIST) SHALL BE PLACED IN CONTACT WITH CONCRETE BEHIND EACH WEEP HOLE, IN ADDITION TO APPROX. 2 CU. FT. OF CONCRETE SAND.
FOR DETAIL OF JOINTS, SEE STD. PLAN C.M.-49.

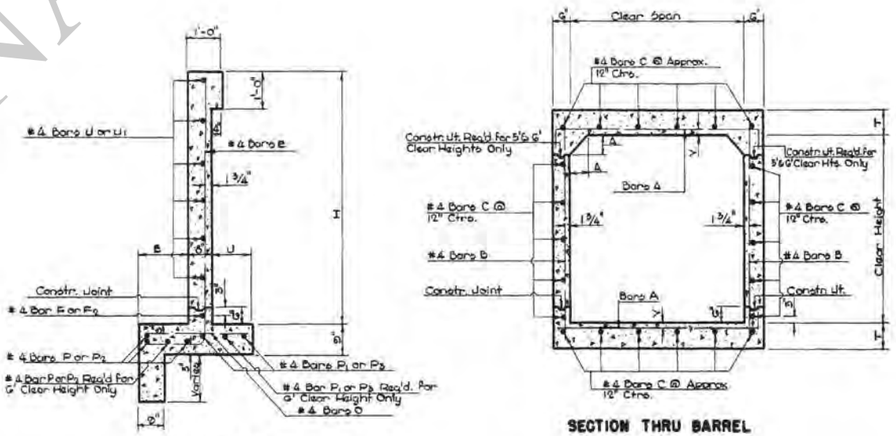

SECTION B-B

SECTION THRU BARREL

DIMENSIONS

OPENINGS			MAX. FILL	BARREL			WINGS AND CURBS									
CLEAR SPAN	CLEAR HEIGHT	AREA	SLAB	WALL	A	T	Y	E	U	G	H	L	L_1	P	P_1	M
FT.	FT.	SQ. FT.	FT.	FT.	IN.	IN.	IN.	FT-IN.	FT-IN.	FT-IN.	FT-IN.	FT-IN.	FT-IN.	FT-IN.	FT-IN.	FT-IN.
4	3	12	28	23	4	7½	1⅜	1-0	0-8	2-4	4-7½	8-5½	11-11½	7-0	11-3	26-0⅞
	4	16	28	13	4	7½	1⅜	1-5	0-10	2-0	5-7½	10-5½	14-2½	9-3	13-6	30-3⅞
5	3	15	22	23	5	8	1⅞	1-0	0-8	2-4	4-8	8-5½	11-11½	7-0	11-3	27-5⅜
	4	20	22	12	5	8	1⅞	1-3	0-10	2-0	5-8	10-5½	14-2½	9-0	13-6	31-0⅜
	5	25	21	7	5	8	1⅞	1-5	1-2	3-3	6-8	12-5½	17-2½	11-0	16-6	36-5⅜
6	3	18	17	22	6	8½	1⅞	1-0	0-8	2-4	4-8½	8-5½	11-11½	7-0	11-3	28-10⅜
	4	24	17	12	6	8½	1⅞	1-3	0-10	2-0	5-8½	10-5½	14-11½	9-0	14-3	33-10⅜
	5	30	17	7	6	8½	1⅞	1-5	1-2	3-3	6-8½	12-5½	17-7½	11-0	16-6	38-1⅜
	6	36	17	5	6	8½	1⅞	1-7	1-7	3-10	7-8½	14-5½	20-2½	13-0	19-0	45-1⅜

BILL OF REINFORCING STEEL FOR 44'-0" CULVERT

| BARREL REINFORCEMENT | | | | | | | | |

F.A.P.	STATE PROJECT	PARISH	SHEET NO.

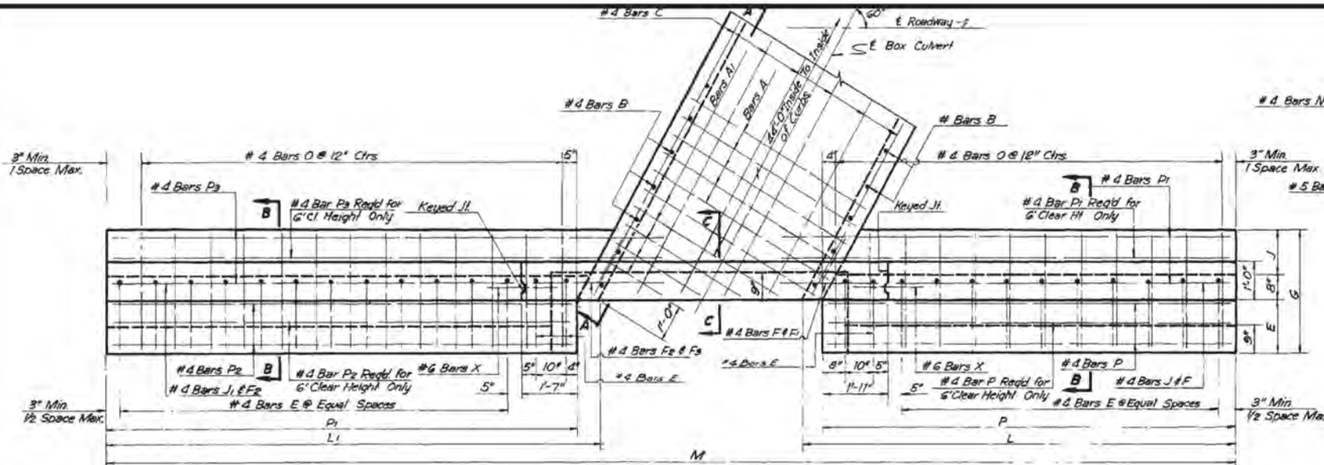

PLAN

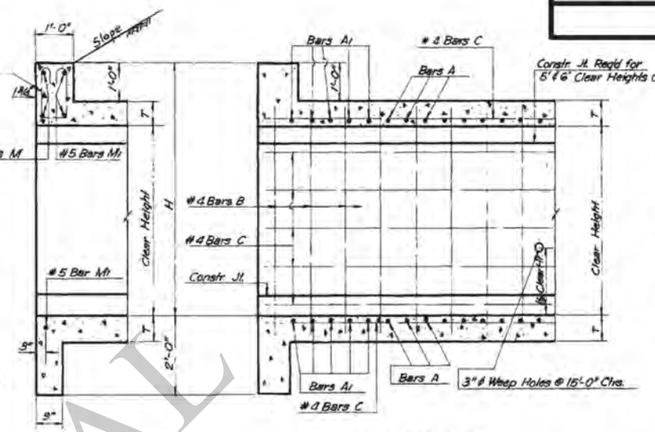

SECTION C-C

SECTION A-A

GENERAL NOTES

Construction Specifications: Latest Approved La. Dept of Highways Standard Specifications.
Design Specifications: AASHO 1961 as Amended by Int. Spec. 1964
Live Load: HS 20-44, or Military Loading, Whichever is Greater.
All Concrete to be Class "A"
All Exposed Corners To Have 3/4" Chamfer, Unless Otherwise Noted.
Reinforcement Shall Be Billet-Steel A.S.T.M. A615 or Rail-Steel A.S.T.M. A616 or Axle-Steel A.S.T.M. A 617.
Dimensions Relating To Reinforcing Steel Are To Bar Centers.
A 1'-6" Square of Plastic Filter Cloth (See Qualified Products List) shall be placed in contact with Concrete behind each Weep Hole, in addition to approx. 2 Cu. Ft. of Concrete Sand.
For Detail of Joints, See Std. Plan C.M.-49.

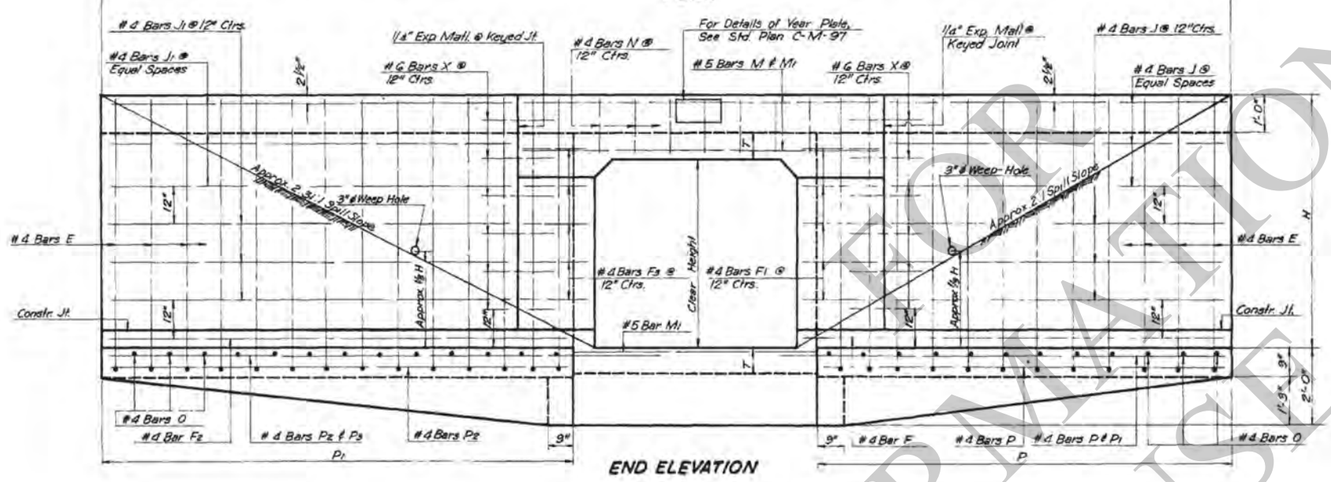

END ELEVATION

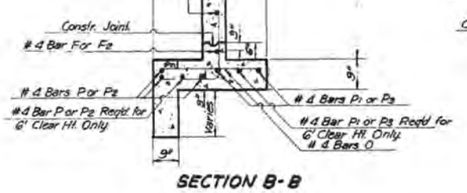

SECTION B-B

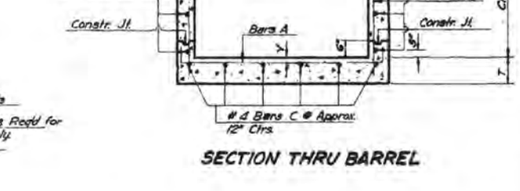

SECTION THRU BARREL

DIMENSIONS

OPENINGS			MAX FILL	BARREL	WINGS AND CURBS								
CLEAR SPAN	CLEAR HEIGHT	AREA	SLAB	WALL	T	Y	E	J	G	H	L	L1	P
FT.	FT.	SQ.FT.	FT.	FT.	IN.	IN.	FT-IN	FT-IN	FT-IN	FT-IN	FT-IN	FT-IN	FT-IN
4	3	12	28	23	7½	1⅛	1-0	0-8	2-4	4-7⅛	8-2⅝	9-9⅝	7-8
	4	16	28	13	7½	1⅛	1-3	0-10	2-9	5-7⅛	8-2⅝	11-3⅝	9-8
5	3	15	22	29	8	1⅞	1-0	0-8	2-4	4-8	8-3⅝	9-9⅝	7-9
	4	20	22	12	8	1⅞	1-3	0-10	2-9	5-8	10-3⅝	11-10⅝	9-9
	5	25	21	7	8	1⅞	1-5	1-2	3-3	6-8	12-3⅝	13-11⅝	11-9
6	3	18	17	22	8½	1⅞	1-0	0-8	2-4	4-8⅛	8-4⅝	9-9⅝	7-10
	4	24	17	12	8½	1⅞	1-3	0-10	2-9	5-8⅛	10-4⅝	11-11⅝	9-10
	5	30	17	7	8½	1⅞	1-5	1-2	3-3	6-8⅛	12-4⅝	13-11⅝	11-10
	6	36	17	5	8½	1⅞	1-7	1-7	3-10	7-8⅛	14-4⅝	16-3⅝	13-10
7	3	21	15	21	9	1⅞	1-0	0-8	2-4	4-5⅛	8-4⅝	9-9⅝	7-10
	4	28	15	12	9	1⅞	1-3	0-10	2-9	5-5⅛	10-4⅝	11-11⅝	9-10
	5	35	14	6	9	1⅞	1-5	1-2	3-3	6-5⅛	12-4⅝	13-11⅝	11-10
	6	42	14	5	9	1⅞	1-7	1-7	3-10	7-5⅛	14-4⅝	16-3⅝	13-10

BILL OF REINFORCING STEEL FOR 44'-0" CULVERT

| BARREL REINFORCEMENT | | | | | | | |

28-NOV-2007 10:02

F.A.P.	STATE PROJECT	PARISH	SHEET NO.

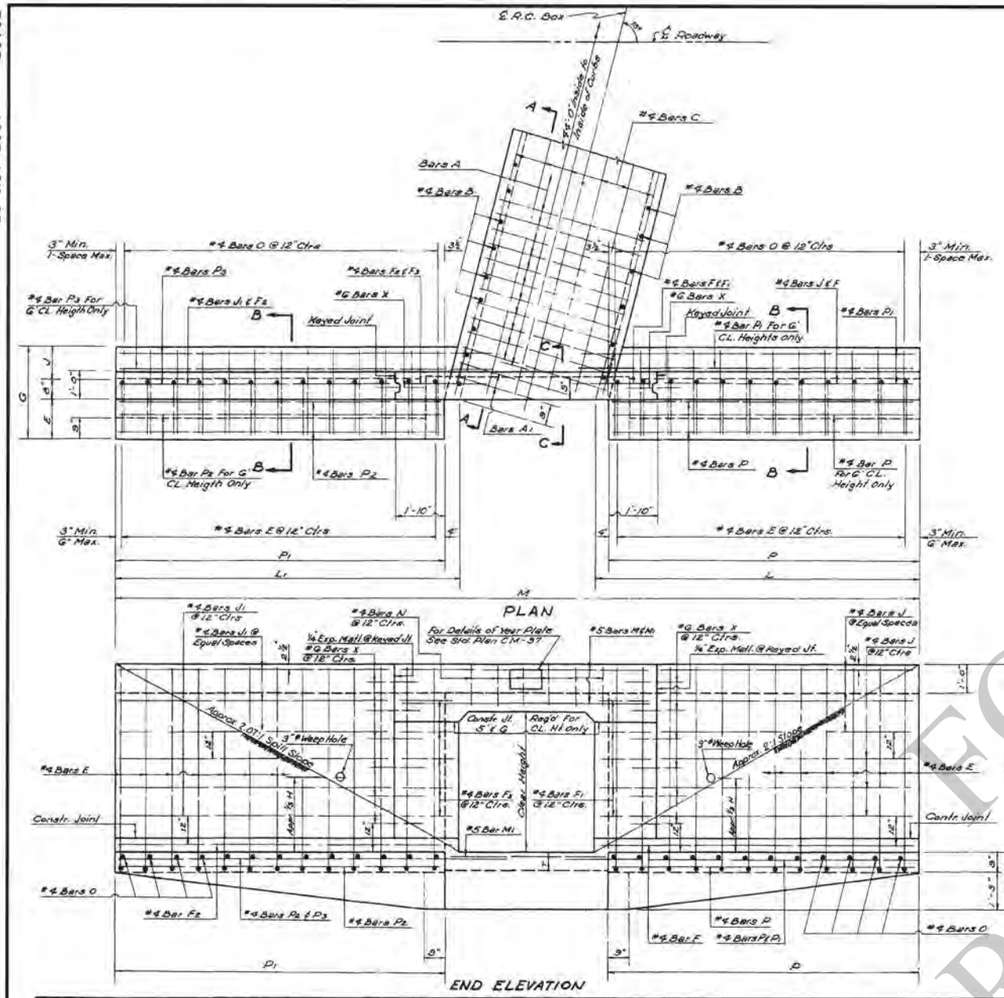

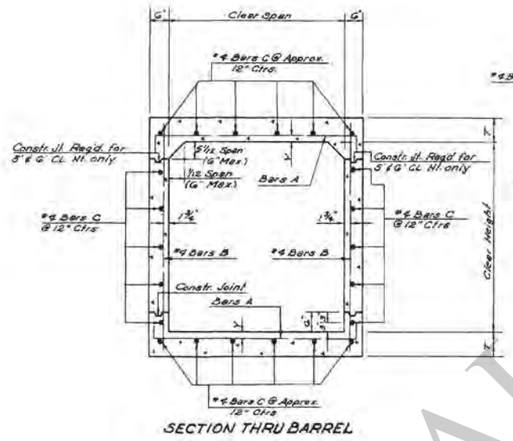

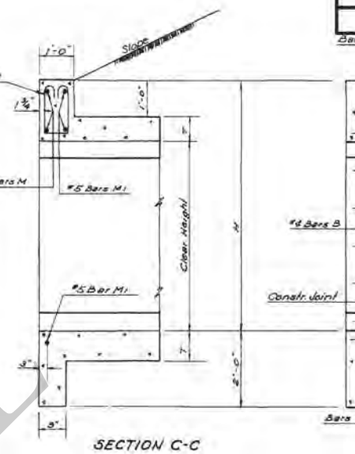

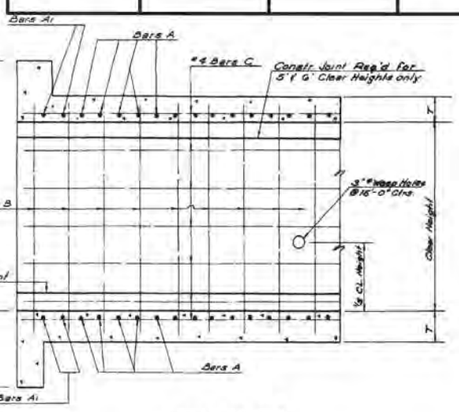

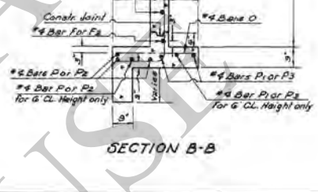

GENERAL NOTES:

Construction Specifications: Latest Approved La. Dept. of Highways. Standard Specifications.
Design Specifications: A.A.S.H.O. 1961 as amended by Int. Spec. 1964
Live Load H 20-44 or Military Loading, Whichever is Greater.
All Concrete to be Class "A"
All Exposed Corners to have ¾" Chamfer, Unless Otherwise noted.
Reinforcement Shall Be Billet-Steel A.S.T.M. A615 or Rail-Steel A.S.T.M. A616 or Axle-Steel A.S.T.M. A617.
Dimensions relating to Reinforcing Steel are to Bar Centers.
A 1'-6" Square of Plastic Filter Cloth (See Qualified Products List) shall be placed in contact with Concrete behind each Weep Hole, in addition to approx. 2 Cu. Ft. of Concrete Sand.
For Detail of Joints, See Std. Plan C.M.-49.

DIMENSIONS

OPENING CLEAR SPAN FT.	OPENING CLEAR HEIGHT FT.	OPENING AREA SQ. FT.	MAX. FILL SLAB FT.	MAX. FILL WALL FT.	BARREL T IN.	BARREL Y IN.	WING AND CURBS E FT-IN	J FT-IN.	G FT-IN.	H FT-IN.	L FT-IN.	L1 FT-IN.	P FT-IN.	P1 FT-IN.	M FT-IN.
4	3	12	28	23	7½	1'9⅛	1-0	0-8	2-4	4-7½	6-3⅜	8-4 3/16	7-9	7-10	20-3½
	4	16	28	13	7½	1'7⅛	1-3	0-10	2-9	5-7½	10-3⅜	10-4 3/16	9-9	9-10	24-3½
5	3	15	22	23	8	1'7⅞	1-0	0-8	2-4	4-8	8-4⅜	8-4 3/16	7-10	7-10	21-10⅜
	4	20	22	12	8	1'7⅞	1-3	0-10	2-9	5-8	10-4⅜	10-4 3/16	9-10	9-10	25-10⅜
	5	25	21	7	8	1'7⅞	1-5	1-2	3-3	6-8	12-4⅜	13-1 3/16	11-10	12-7	30-7⅜
6	3	18	17	22	8½	1'8⅝	1-0	0-8	2-4	4-8½	8-4⅜	8-4 3/16	7-10	7-10	22-10⅜
	4	24	17	12	8½	1'8⅝	1-3	0-10	2-9	5-8½	10-4⅜	11-1 3/16	9-10	10-7	27-7⅜
	5	30	17	7	8½	1'8⅝	1-5	1-2	3-3	6-8½	12-4⅜	13-1 3/16	11-10	12-7	31-7⅜
	6	36	17	5	8½	1'8⅝	1-7	1-7	3-10	7-8½	14-4⅜	15-1 3/16	13-10	14-7	35-7⅜
7	3	21	15	21	9	1'9⅛	1-0	0-8	2-4	4-8	8-4⅜	9-1 3/16	7-10	8-7	24-8⅛
	4	28	15	12	9	1'9⅛	1-3	0-10	2-9	5-9	10-4⅜	11-1 3/16	9-10	10-7	28-8⅛
	5	35	14	6	9	1'9⅛	1-5	1-2	3-3	6-9	12-4⅜	13-1 3/16	11-10	12-7	32-8⅛
	6	42	14	5	9	1'9⅛	1-7	1-7	3-10	7-9	14-4⅜	15-1 3/16	13-10	14-7	36-8⅛

BILL OF REINFORCING STEEL FOR 44'-0" CULVERT

BARREL REINFORCEMENT

OPENING CLEAR SPAN FT.	OPENING CLEAR HEIGHT FT.	BARS A SIZE	BARS A NO.	BARS A LGTH. FT-IN	BARS A SPAC. IN	BARS A1 SIZE NO.	BARS A1 SHORT BAR FT-IN	BARS A1 VAR. BAR IN.	BARS A1 LONG BAR FT-IN	BARS A1 SPAC. IN.	BARS B NO.	BARS B LGTH. FT-IN	BARS B SPAC. IN	#4 BARS C NO.	#4 BARS C LGTH.① FT-IN.
4	3	#5	238	5-G	4½	#5	8	2-11	17.0000	4-6	4½	32	3-11	12	16	47-2
	4	#5	238	5-G	4½	#5	8	2-11	17.0000	4-6	4½	32	4-11	12	16	47-2
5	3	#6	196	G-G	5½	#6	8	2-11	21.0000	4-6	5½	32	4-0	12	16	47-2
	4	#6	196	G-G	5½	#6	8	2-11	21.0000	4-6	5½	32	5-0	12	20	47-2
	5	#6	196	G-G	5½	#6	8	2-11	21.0000	4-6	5½	32	6-0	12	22	47-2
6	3	#6	192	7-G	5½	#6	12	2-11	20.5000	6-6	5½	32	4-1	12	20	47-2
	4	#6	192	7-G	5½	#6	12	2-11	20.5000	6-6	5½	32	5-1	12	22	47-2
	5	#6	192	7-G	5½	#6	12	2-11	20.5000	6-6	5½	32	6-1	12	24	47-2
	6	#6	192	7-G	5½	#6	12	2-11	20.5000	6-6	5½	112	7-1	10	26	47-2
7	3	#6	210	8-G	5	#6	16	2-11	18.6667	7-7	5	32	4-2	12	22	47-2
	4	#6	210	8-G	5	#6	16	2-11	18.6667	7-7	5	32	5-2	12	24	47-2
	5	#6	210	8-G	5	#6	16	2-11	18.6667	7-7	5	32	6-2	12	26	47-2
	6	#6	210	8-G	5	#6	16	2-11	18.6667	7-7	5	112	7-2	10	28	47-2

WING AND CURB REINFORCEMENT

OPENING CLEAR SPAN FT.	OPENING CLEAR HEIGHT FT.	#4 BARS E NO.	#4 BARS E LGTH. FT-IN	#4 BARS F SPAC. IN	#4 BARS F NO.	#4 BARS F LGTH. FT-IN	#4 BARS F1 NO.	#4 BARS F1 LGTH. FT-IN	#4 BARS F2 NO.	#4 BARS F2 LGTH. FT-IN	#4 BARS P3 NO.	#4 BARS P3 LGTH. FT-IN	#4 BARS J NO.	#4 BARS J LGTH. FT-IN	#4 BARS J1 NO.	#4 BARS J1 LGTH. FT-IN	#4 BARS N NO.	#4 BARS N LGTH. FT-IN	#5 BARS O NO.	#5 BARS O LGTH. FT-IN	#4 BARS P NO.	#4 BARS P LGTH. FT-IN	#4 BARS P1 NO.	#4 BARS P1 LGTH. FT-IN	#4 BARS P2 NO.	#4 BARS P2 LGTH. FT-IN	#5 BARS M NO.	#5 BARS M LGTH. FT-IN	#5 BARS N1 NO.	#5 BARS N1 LGTH. FT-IN	#5 BARS X NO.	#5 BARS X LGTH. FT-IN
4	3	32	G-2½	12	2	3-0	G	3-0	2	3-9	G	3-3	8	5-7	6	5-8	10	4-9	32	1-11	G	7-5	4	3-0	G	7-6	4	3-5	4	8-3	G	9-10	16	2-0
	4	40	7-5½	12	2	11-0	6	3-0	2	11-9	8	3-3	10	7-7	10	7-8	10	4-9	40	2-9	G	9-5	4	11-0	G	9-6	4	11-9	4	8-3	G	9-10	20	2-0
5	3	32	G-3	12	2	9-9	G	3-0	2	9-9	G	3-3	8	5-8	8	5-8	12	4-5	32	1-11	G	7-6	4	9-9	G	7-6	4	9-5	4	9-9	G	9-10	16	2-0
	4	40	7-6	12	2	11-1	6	3-0	2	11-9	8	3-3	10	7-8	10	7-8	12	4-5	40	2-9	G	9-6	4	11-1	G	9-6	4	11-9	4	9-9	G	9-10	20	2-0
	5	50	8-0	12	2	13-1	10	3-0	2	14-1	10	3-3	12	9-8	12	10-5	12	4-5	50	2-10	G	11-9	4	13-1	G	12-3	4	14-9	4	9-9	G	9-10	24	2-0
6	3	32	G-3½	12	2	5-1	G	3-0	2	5-9	G	3-3	8	5-8	8	5-8	16	4-9	32	1-11	G	7-6	4	5-1	G	7-6	4	5-5	4	10-9	G	9-10	16	2-0
	4	40	7-6½	12	2	12-1	8	3-3	10	7-8	10	3-3	10	7-8	10	7-8	16	4-9	40	2-9	G	9-6	4	11-1	G	9-6	4	12-3	4	10-9	G	9-10	20	2-0
	5	50	8-0½	12	2	13-1	10	3-0	2	14-1	10	3-3	12	9-8	12	10-5	16	4-9	50	2-10	G	11-9	4	13-1	G	12-3	4	14-9	4	10-9	G	9-10	24	2-0
	6	58	9-10½	12	2	15-1	12	3-0	2	16-1	12	3-3	14	11-8	14	12-5	16	4-9	58	3-5	G	13-9	G	15-1	8	14-3	G	16-5	4	10-9	G	9-10	28	2-0
7	3	32	G-4	12	2	5-1	G	3-0	2	5-10	G	3-3	8	5-8	8	5-8	18	4-7	32	1-11	G	7-6	4	5-1	G	7-6	4	5-5	4	10-2	4	11-5	G	7-11	16	2-0
	4	40	7-7	12	2	12-1	8	3-3	10	7-8	10	3-3	10	7-8	10	7-8	18	4-7	40	2-9	G	9-6	4	11-1	G	9-6	4	12-3	4	11-5	G	7-11	20	2-0
	5	50	8-0	12	2	13-1	10	3-0	2	14-1	10	3-3	12	9-8	12	10-5	18	4-7	50	2-10	G	11-9	4	13-1	G	12-3	4	14-9	4	11-5	G	7-11	24	2-0
	6	58	9-11	12	2	15-1	12	3-0	2	16-1	12	3-3	14	11-8	14	12-5	18	4-7	58	3-5	G	13-9	G	15-1	8	14-3	G	16-5	4	11-5	G	7-11	28	2-0

QUANTITIES

OPENING CLEAR SPAN FT.	OPENING CLEAR HEIGHT FT.	PER LINEAR FT OF BARREL STEEL LBS.	PER LINEAR FT OF BARREL CONC. CU.YDS.	44'-0" CULVERT STEEL LBS.	44'-0" CULVERT CONC. CU.YDS.
4	3	46.52	0.3667	2674	23.45
	4	45.13	0.3837	2981	28.28
5	3	53.97	0.4138	3325	26.78
	4	62.64	0.4503	3633	31.53
	5	65.31	0.4873	3586	37.55
6	3	67.97	0.4877	3708	30.32
	4	70.64	0.5247	9037	35.54
	5	73.32	0.5617	9376	41.13
	6	77.88	0.5905	9920	47.47
7	3	61.86	0.5648	9376	34.30
	4	69.22	0.6019	9685	39.27
	5	86.89	0.6383	5024	44.07
	6	91.98	0.6759	5570	51.82

OPENING CLEAR SPAN FT. | OPENING CLEAR HEIGHT FT-IN.

① Includes One 1'-6" Lap Splice.

Ⓐ #6 Bars X to be ¾"ø Smooth and Greased for 1'-0" of Length

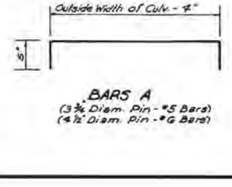

BARS A
(3⅜ Diam. Pin - #5 Bars)
(4½ Diam. Pin - #6 Bars)

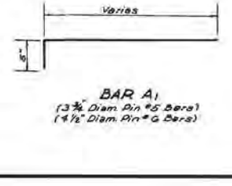

BAR A1
(3⅜ Diam. Pin #5 Bars)
(4½ Diam. Pin #6 Bars)

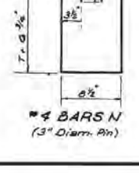

#4 BARS N
(3" Diam. Pin)

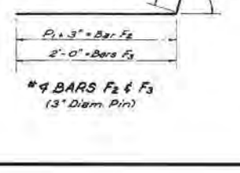

#4 BARS F2 & F3
(3" Diam. Pin)

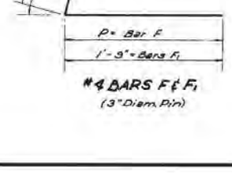

#4 BARS F & F1
(3" Diam. Pin)

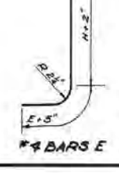

#4 BARS E

APPROVED BY:

CHIEF ENGINEER — DATE 1-11-78

DATE	DESCRIPTION	BY
1-11-78	Rev. Weep Hole Note.	W.T.J.
6-10-75	Rev. Slope Intersect	W.T.J.
6-18-75	Rev. General Note for Steel	H.E.M.
4-27-71	Added Axle Steel	W.E.M.
12-16-66	Rev. 8'-6" Spacing to Multiples of 6" Loading & Deleted 3' Stage	W.E.M.

REVISIONS

STANDARD PLAN

REINFORCED CONCRETE BOX CULVERT
STRAIGHT WINGS 75° CROSSING
2:1 SPILL SLOPE NORMAL TO CHANNEL
4' THRU 7' SPANS 3' THRU 6' HEIGHTS

DATED Sept. 28, 1966

STATE OF LOUISIANA
DEPARTMENT OF HIGHWAYS

DESIGNED W.E.M.	DETAILED E.J. Martel	TRACED K. Mitchell
CHECKED H.K.B.	CHECKED W.E. Marcum	CHECKED W.E. Marcum
IN CHARGE OF		

C·C·S·S 4-7 RS 75-1

R:\Standard Plans\English\Old Sheets\CCSS4-7RS75_1.dgn

FOR INFORMATIONAL PURPOSES ONLY

F.A.P.	STATE PROJECT	PARISH	SHEET NO.

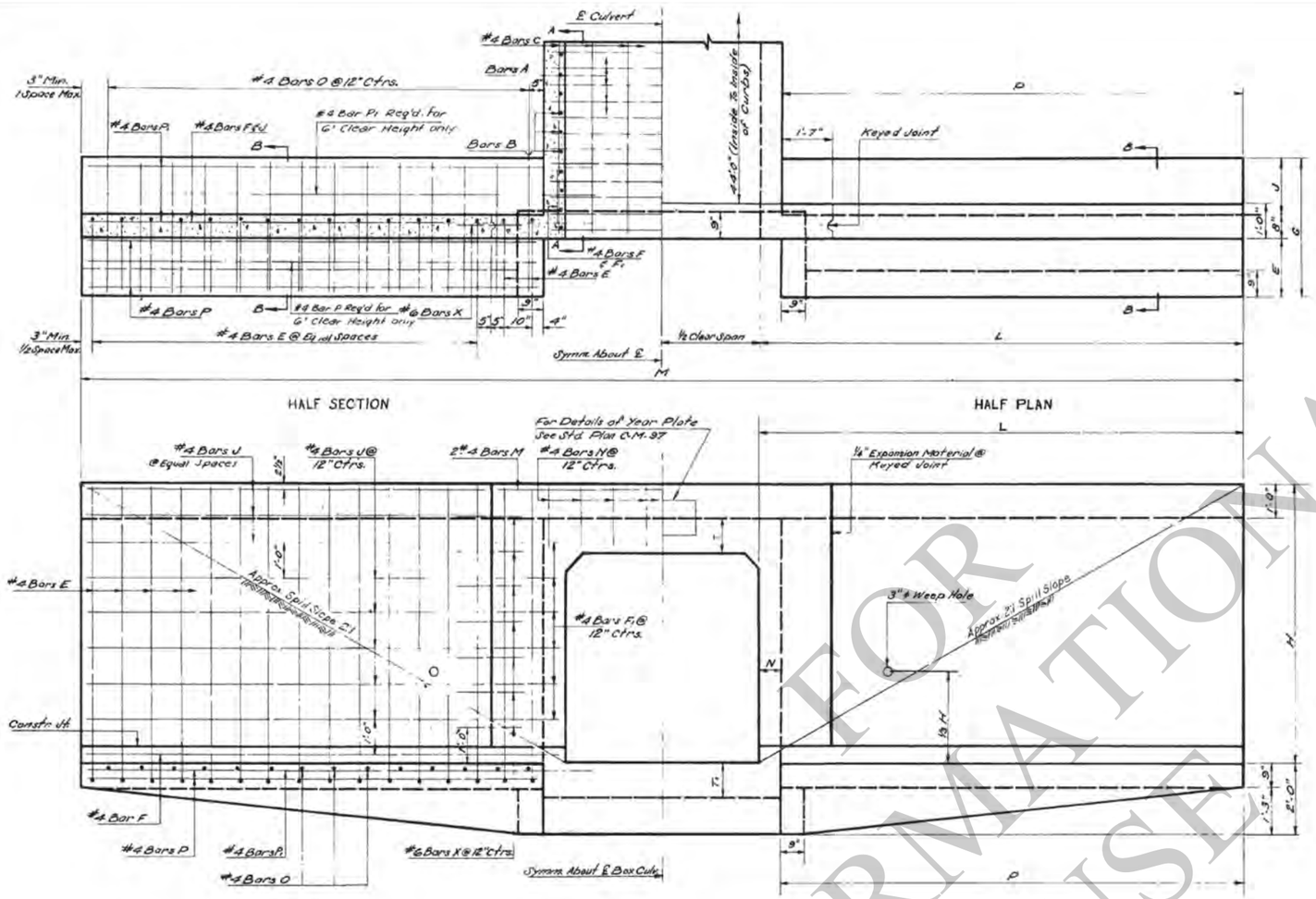

| DIMENSIONS | | |

F.A.P.	STATE PROJECT	PARISH	SHEET NO.

28-NOV-2007 10:03

R:\Standard Plans\English\Old Sheets\CCSS7-10RS45_1.dgn

GENERAL NOTES

Construction Specifications: Latest approved La Dept of Highways Standard Specifications.
Design Specifications: A.A.S.H.O. 1961 as amended by Int Spec 1966.
Live Load: HS 20-44 or Military; whichever is Greater.
All Concrete to be Class "A".
All exposed corners to have ¾" chamfer unless otherwise noted.
Reinforcement shall be Billet-Steel A.S.T.M. A615 or Rail-Steel A.S.T.M. A616 or Axle-Steel A.S.T.M. A617.
Dimensions relating to Reinforcing Steel are to bar centers.
A 1"-0" Square of Plastic Filter Cloth (See Qualified Products List) Shall be placed in contact with Concrete behind each Weep Hole, in addition to approx. 2 Cu. Ft. of Concrete Sand.
For details of Joints, See Std. Plan CM-99.

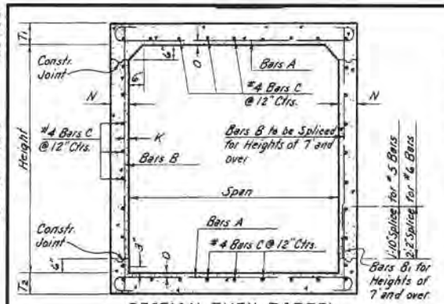

SECTION THRU BARREL

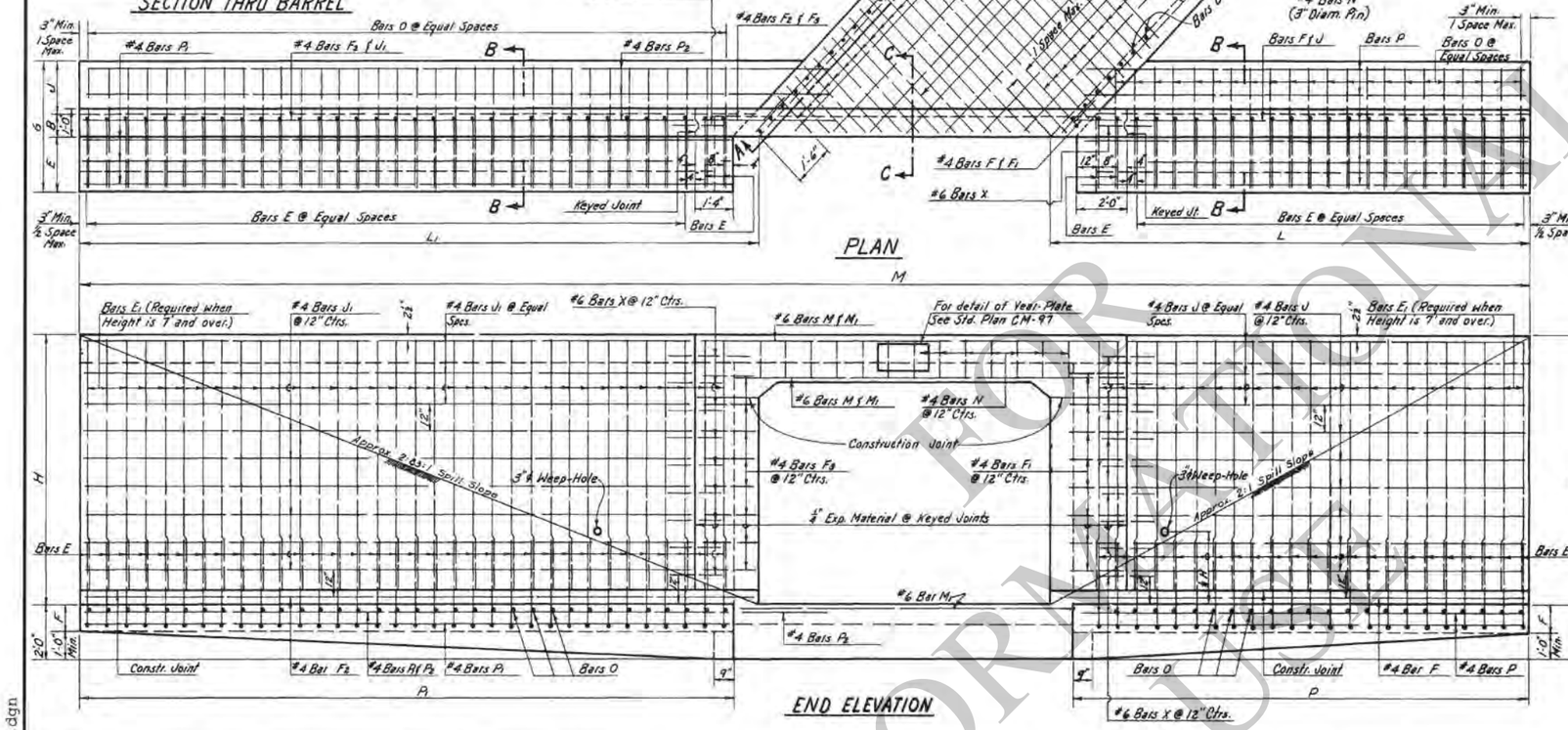

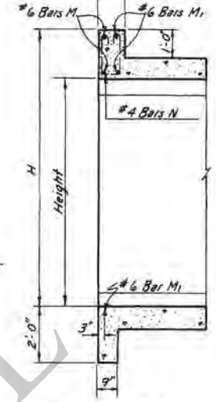

SECTION C-C

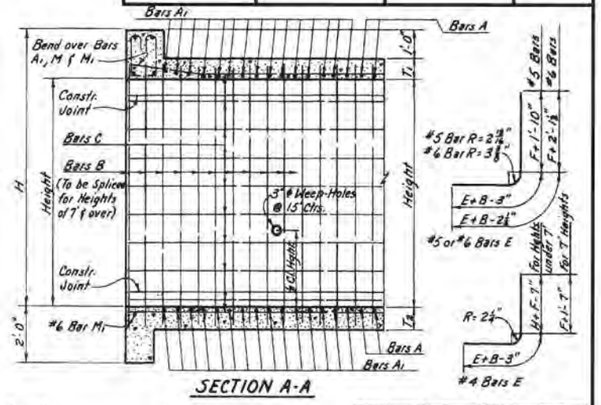

SECTION A-A

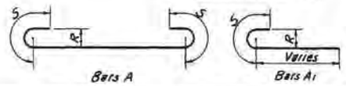

DIMENSIONS - BARS A AND A1		
Size	R	S
#6	5⅛"	0'-11"
#7	6⅞"	1'-1"

DIMENSIONS

OPENING		BARREL				WINGS AND CURBS										
Span in Feet	Height in Feet	T1 In.	T2 In.	N In.	O In.	B In.	E Ft-In.	J Ft-In.	G Ft-In.	F In.	H Ft-In.	L Ft-In.	L1 Ft-In.	P Ft-In.	A Ft-In.	M Ft-In.
7	4	9	9	6	1⅞	6	1-3	0-10	2-9	9	5-9	10-6½	14-10½	9-10	14-2	35-3⅜
	5	9	9	6	1⅞	6	1-5	1-2	3-3	9	6-9	12-6½	17-6½	11-10	17-0	40-1⅜
	6	9	9	6	1⅞	6	1-7	1-7	3-10	9	7-9	14-6½	20-7½	13-10	19-11	45-0⅜
	7	9	9	7	1⅞	10	1-11	1-8	4-5	12	8-9	16-8⅝	23-6⅝	15-11	22-9	50-2⅜
8	4	10	10	6	1⅞	8	1-3	0-10	2-9	9	5-10	10-6¼	14-10½	9-10	14-2	36-8¾
	5	10	10	6	1⅞	8	1-5	1-2	3-3	9	6-10	12-6¼	17-10½	11-10	17-2	41-8¾
	6	10	10	7	1⅞	8	1-7	1-7	3-10	9	7-10	14-6¾	21-0⅞	13-9	20-3	46-11⅜
	7	10	10	7	1⅞	10	1-11	1-8	4-5	12	8-10	16-8⅝	23-6⅝	15-11	22-9	51-7⅝
	8	10	10	8	1⅞	10	2-0	2-0	4-10	12	9-10	18-4⅝	26-8⅝	17-5	25-9	56-4⅜
9	5	10½	10½	7	1⅝	8	1-5	1-2	3-3	9	6-10½	12-7⅜	17-11⅞	11-10	17-2	43-4⅜
	6	10½	10½	7	1⅝	8	1-7	1-7	3-10	9	7-10½	14-6⅞	21-0⅞	13-9	20-3	48-4⅜
	7	10½	10½	8	1⅝	10	1-11	1-8	4-5	12	8-10½	16-10¼	23-6⅝	15-11	22-9	53-3⅝
	8	10½	10½	8	1⅝	10	2-0	2-0	4-10	12	9-10½	18-4⅝	26-8⅝	17-5	25-9	57-9⅞
	9	10½	10½	9	1⅝	10	2-2	2-4	5-4	12	10-10½	20-3⅜	29-0⅝	19-3	28-0	62-1⅞
10	5	11	11	8	1⅝	8	1-5	1-2	3-3	9	6-11	12-9⅛	18-1⅛	11-10	17-2	45-0⅜
	6	11	11	8	1⅝	8	1-7	1-6	3-9	9	7-11	14-9⅝	21-2⅝	13-10	20-3	50-1⅞
	7	11	11	8	1⅝	10	1-11	1-8	4-5	12	8-11	16-10¼	23-9⅛	15-11	22-10	54-9⅜
	8	11	11	9	1⅝	10	2-0	2-0	4-10	12	9-11	19-2⅜	26-9⅞	18-2	25-9	60-2⅝
	9	11	11	9	1⅝	10	2-2	2-4	5-4	12	10-11	20-11⅝	29-7⅞	19-11	28-7	64-9⅞
	10	11	11	10	1⅝	10	2-4	2-8	5-10	12	11-11	22-11⅜	32-2⅜	21-9	31-0	69-3

QUANTITIES

PER LIN. FT. BARREL (44'-0" CULVERT Above Fl.)			
STEEL Lbs.	CONCRETE Cu. Yds.	STEEL Lbs.	CONCRETE Cu. Yds.
88.12	0.6019	5064	41.94
80.79	0.6309	5408	40.32
95.35	0.6759	6072	55.66
107.29	0.7654	7268	72.84
96.88	0.7150	5568	47.39
98.56	0.7500	5962	53.88
103.44	0.8344	6588	63.56
116.16	0.8776	7732	78.44
121.82	0.9805	8520	91.40
122.30	0.8843	7043	80.43
124.97	0.9275	7611	68.15
138.97	1.0247	8815	85.62
143.40	1.0741	9543	96.06
150.80	1.1538	10838	110.31
133.28	1.0257	7602	67.30
135.95	1.0751	8168	75.22
145.08	1.1245	9153	90.62
158.61	1.2346	10126	104.63
163.80	1.2901	11548	116.67
175.06	1.4187	13958	132.67

BILL OF REINFORCING STEEL (FOR 44'-0" CULVERT)

| OPENING | | BARREL REINFORCEMENT | | | | | | | | | |

F.A.P.	STATE PROJECT	PARISH	SHEET NO.

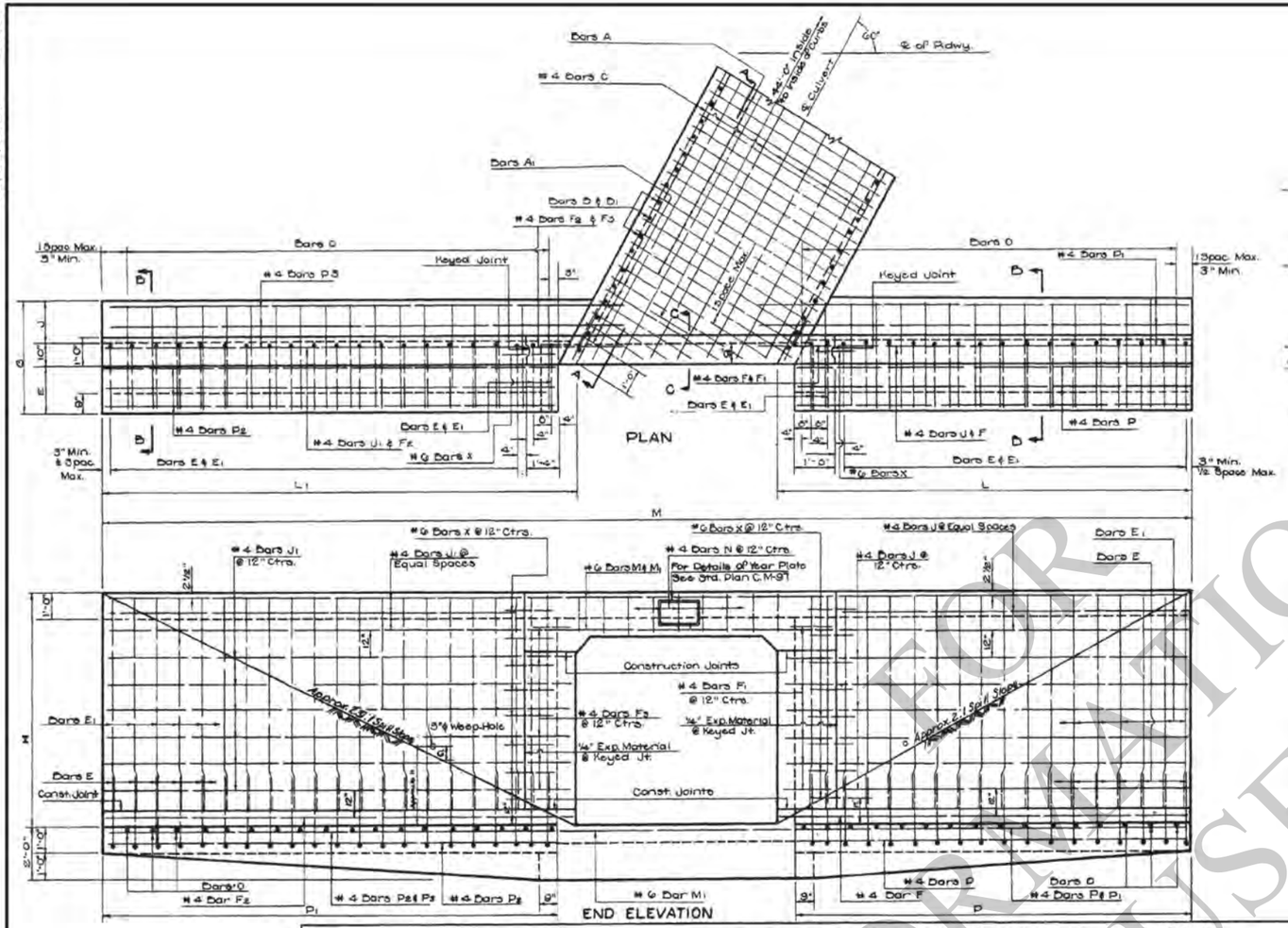

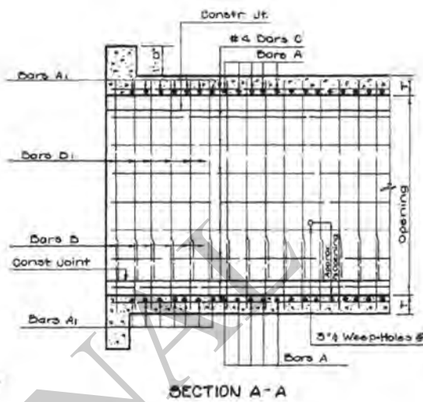

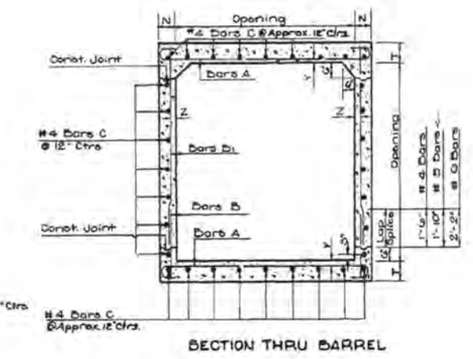

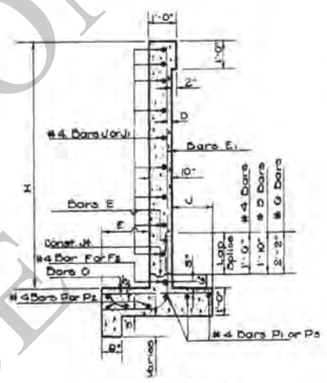

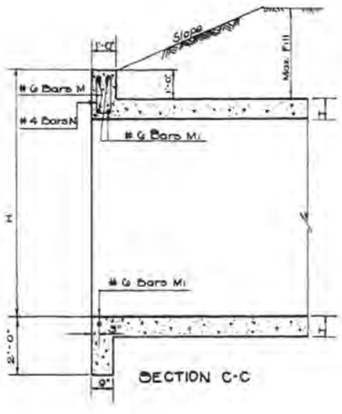

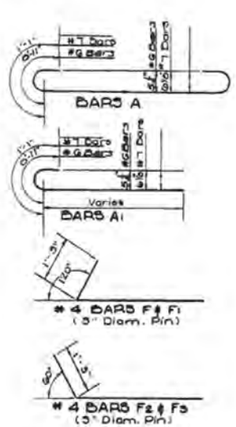

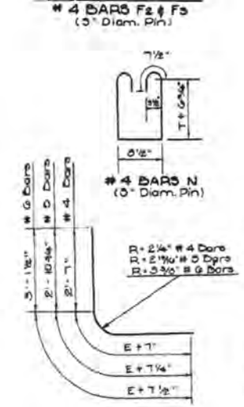

BILL OF REINFORCING STEEL FOR 44'-0" CULVERT

| OPENINGS | | BARREL REINFORCEMENT | | | | | | | | | | | | | | | | | | | | | | | | | | WINGS AND CURBS REINFORCEMENT | | | | | | | | | | | | | | | | | | |

F.A.P.	STATE PROJECT	PARISH	SHEET NO.

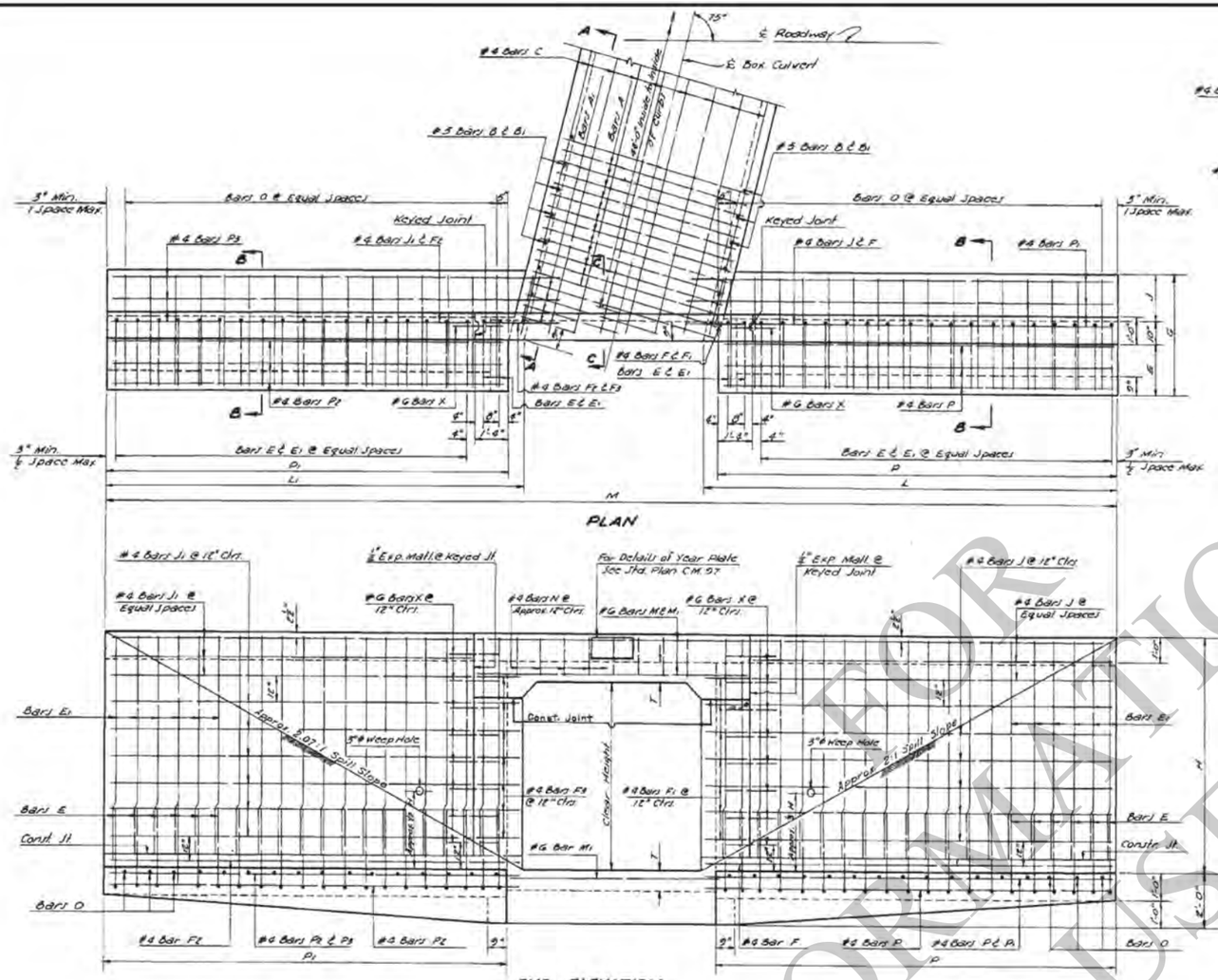

OPENING		QUANTITIES PER LIN. FT. OF BARREL		44'-0" CULVERT	
CLEAR SPAN	CLEAR HGT.	STEEL	CONC.	STEEL	CONC.
FT.	FT.	LBS.	CU. YDS.	LBS.	CU. YDS.
7	7	107.29	0.7754	6866	66.07
8	7	116.18	0.8776	7315	71.51
	8	121.82	0.9605	8146	83.55
9	7	138.87	1.0247	8402	78.12
	8	143.40	1.0741	9023	87.57
	9	150.80	1.1898	10244	101.49
10	7	148.83	1.1245	8902	83.92
	8	153.61	1.2348	9544	95.19
	9	163.80	1.2901	10878	108.33
	10	173.27	1.4187	12881	121.64

DIMENSIONS

OPENING		MAX. FILL	SLAB	WALL	BARREL				WINGS AND CURBS								
CLEAR SPAN	CLEAR HGT.	AREA			N	T	O	Y	E	J	G	H	L	L1	P	P1	M
FT.	FT.	SQ. FT.	FT.	FT.	IN.	IN.	IN.	IN.	FT.IN.	FT.IN.	FT.IN.	FT.IN.	FT.IN.	FT.IN.	FT.IN.	FT.IN.	FT.IN.
7	7	49	13	6	7	9	1⅞	1⅞	1-11	1-8	4-5	8-5	16-6¾	16-10½	16-1	16-3	40-9½
8	7	56	13	6	7	10	1¾	1¾	1-11	1-8	4-5	8-10	16-8¼	16-10½	16-1	16-3	41-9¼
	8	64	12	5	8	10	1⅛	1⅛	2-0	2-0	4-10	9-0	18-7⅛	19-4½	17-1	16-8	46-8
9	7	63	11	8	8	10½	1⅞	1⅞	1-11	1-8	4-5	9-10½	16-9⅝	17-7½	16-1	16-11	43-8½
	8	72	11	5	8	10½	1 15/16	1 15/16	2-0	2-0	4-10	9-10½	18-4½	19-1⅝	17-8	18-5	46-8½
	9	81	10	5	9	10½	1 15/16	1 15/16	2-2	2-4	5-4	10-10½	20-8⅝	21-5⅝	18-11	20-8	51-5⅝
10	7	70	8	7	8	11	1¾	1 15/16	1-11	1-8	4-5	8-11	16-9⅝	17-7½	16-1	16-11	44-3½
	8	80	7	6	9	11	1 15/16	1 15/16	2-0	2-0	4-10	9-11	18-5⅛	19-2½	17-8	18-5	47-1½
	9	90	6	5	9	11	1 15/16	1 15/16	2-2	2-4	5-4	10-11	20-8⅝	21-5⅝	19-11	20-8	52-5⅝
	10	100	6	6	10	11	1¾	1 15/16	2-4	2-8	5-10	11-11	22-5⅝	24-0½	21-10	23-2	57-0½

BILL OF REINFORCING STEEL FOR 44'-0" CULVERT

BARREL REINFORCEMENT

| OPENING | | BARS A | | | | | BARS A1 | | | | #5 BARS B & B1 | | | | | #4 BARS C | | | | | | | |

8/26/2014 15:48

IP_PWP:dms09544\CCSS7-10RS90_1.dgn

F.A.P.	STATE PROJECT	PARISH	SHEET NO.

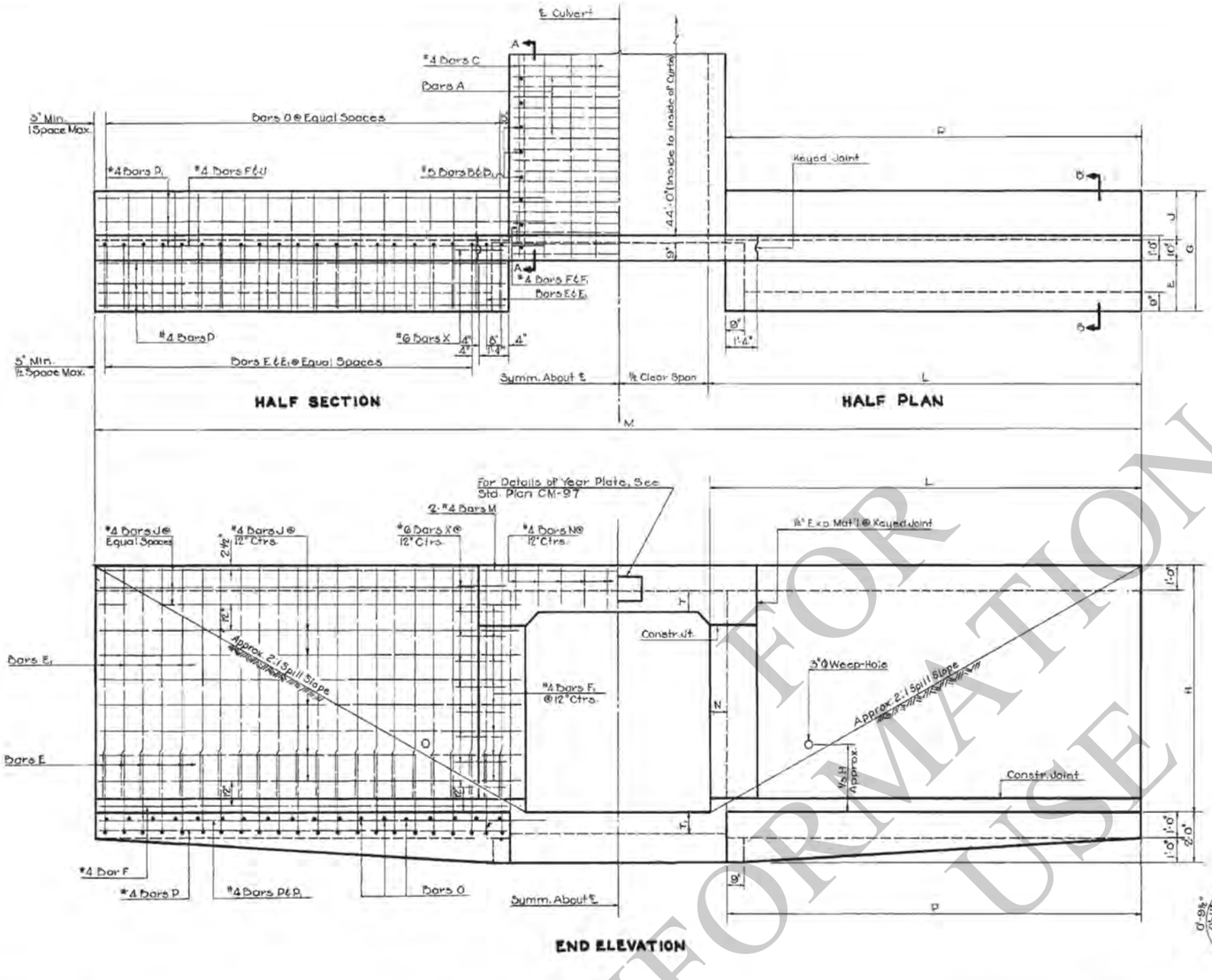

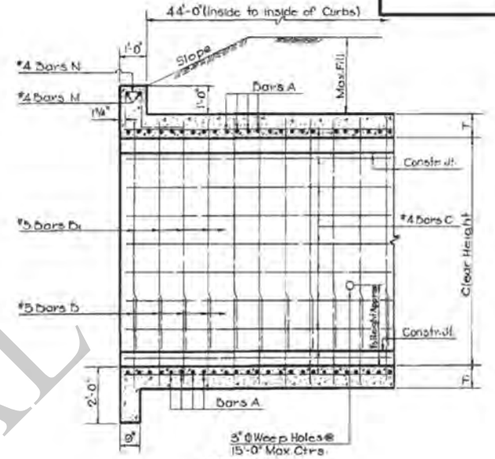

SECTION A-A

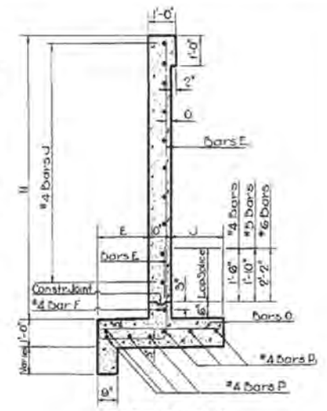

SECTION B-B

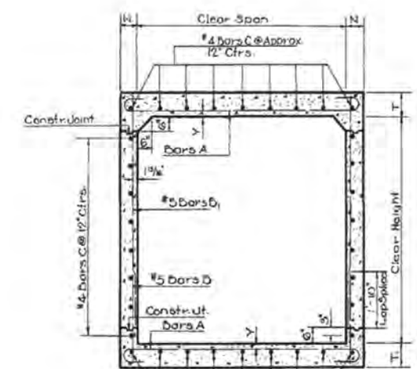

SECTION THRU BARREL

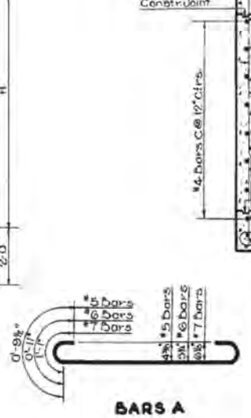

BARS A

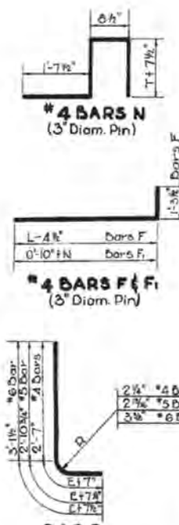

#4 BARS N
(3" Diam. Pin)

#4 BARS F & F,
(3" Diam. Pin)

BAR E

C·C·S·S·7-10·R·S·90°1

DIMENSIONS

OPENINGS			MAX. FILL		BARREL					WINGS & CURBS						
CLEAR SPAN	CLEAR HEIGHT	AREA	SLAB	WALL	N	T	T,	O	Y	E	J	G	H	L	P	M
FT.	FT.	SQ. FT.	FT.	FT.	IN.	IN.	IN.	IN.	IN.	FT-IN.	FT-IN.	FT-IN.	FT-IN.	FT-IN.	FT-IN.	FT-IN.
7	7	49	13	6	7	9	9	1¾	1⅞	1-11	1-8	4-5	8-9	16-8	16-1	40-4
8	7	56	13	6	7	10	10	1⅝	1⅞	1-11	1-8	4-5	8-10	16-8	16-1	41-4
	8	64	12	5	8	10	10	1¹⁵⁄₁₆	1⅞	2-0	2-0	4-10	9-10	16-7	17-11	45-2
9	7	63	11	5	8	10½	10½	1¾	1¹⁵⁄₁₆	1-11	1-8	4-5	8-10½	16-9	16-1	42-0
	8	72	11	5	8	10½	10½	1⅝	1⅞	2-0	2-0	4-10	9-10½	16-9	18-5	47-2
	9	81	10	5	9	10½	10½	1⅝	1⅞	2-2	2-4	5-4	10-10½	20-9	20-0	50-6
10	7	70	6	6	8	11	11	1¾	1⅞	1-11	1-8	4-5	8-11	16-10	16-2	43-8
	8	80	6	6	8	11	11	1⅝	1⅞	2-0	2-0	4-10	8-11	13-2	18-5	48-4
	9	90	6	6	9	11	11	1⅝	1⅞	2-2	2-4	5-4	10-11	20-3	20-0	51-6
	10	100	6	6	10	11	11	1⅝	1⅞	2-4	2-8	5-10	11-11	22-8	21-10	53-4

BILL OF REINFORCING STEEL FOR 44'-0" CULVERT

| BARREL REINFORCEMENT | | | | | |

F.A.P.	STATE PROJECT	PARISH	SHEET NO.

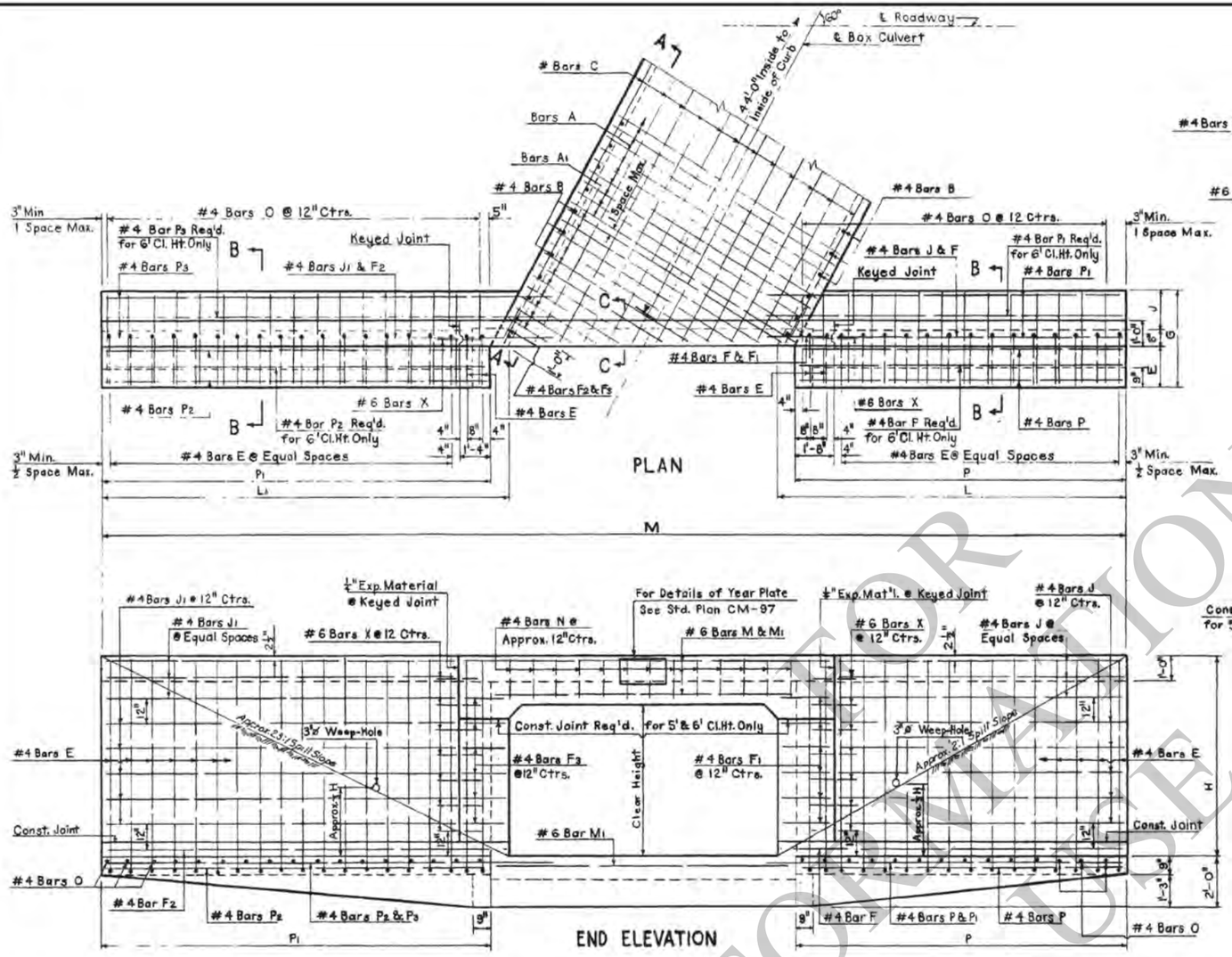

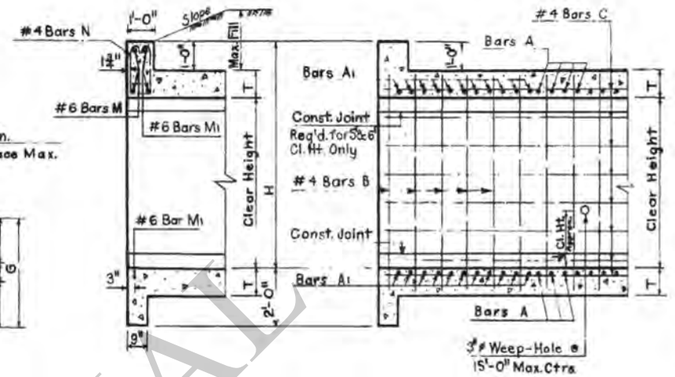

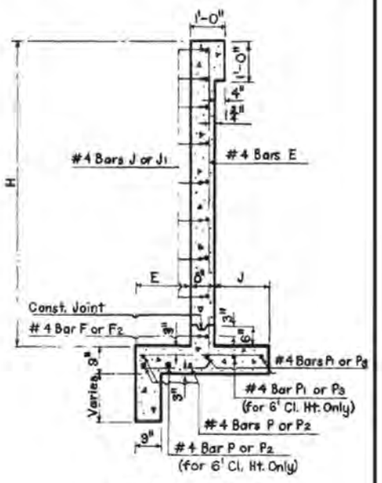

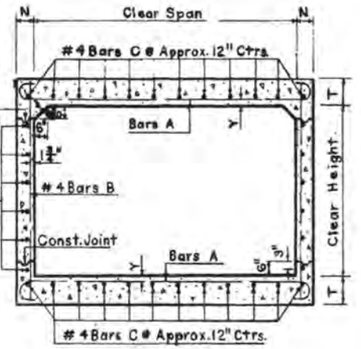

GENERAL NOTES:

Construction Specifications: Latest Approved La. Department of Highways Standard Specifications.

Design Specifications: A.A.S.H.O. 1969 as Amended to 1971.

Live Load: HS. 20-44 or Military Loading Whichever is Greater.

All Concrete to be Class "A".

All Exposed Corners to have ¾" Chamfer, Unless Otherwise Noted.

Reinforcement Shall be Billet-Steel A.S.T.M. A615 or Rail-Steel A.S.T.M. A616 or Axle-Steel A.S.T.M. A617.

Dimensions Relating to Reinforcing Steel are to Bar Centers.

A 1'-6" Square of Plastic Filter Cloth (See Qualified Products List) shall be placed in contact with Concrete behind each Weep Hole, in addition to approx. 2 Cu. Ft. of Concrete Sand.

For Details of Joints, See Std. Plan C.M.-95.

C.C.S.S. 8-10-R-60°-1

APPROVED BY: Dominque DeWitt — CHIEF ENGINEER — 1-11-78 DATE

DIMENSIONS

OPENING CLEAR SPAN	OPENING CLEAR HEIGHT	AREA	MAX. FILL SLAB	MAX. FILL WALL	BARREL N	BARREL T	BARREL Y	WING AND CURBS E	J	G	H	L	L1	P	P1	M
FT.	FT.	SQ. FT.	FT.	FT.	IN.	IN.	IN.	FT-IN.	FT-IN.	FT-IN.	FT-IN.	FT-IN.	FT-IN.	FT-IN.	FT-IN.	FT-IN.
8	4	32	14	11	6	10	1 15/16	1-3	0-10	2-9	5-10	10-9 5/16	12-5 15/16	10-3	11-11	32-6 1/8
	5	40	13	8	6	10	1 7/16	1-5	1-2	3-3	6-10	12-8 5/16	14-6 5/16	12-3	14-0	36-7 3/8
	6	48	13	5	7	10	1 7/16	1-7	1-7	3-10	7-10	14-10 5/16	17-4 5/16	14-2	16-8	41-5
9	5	45	12	8	7	10 ½	1	1-5	1-2	3-3	6-10 ½	12-11 5/16	14-8 5/16	12-3	14-0	37-11 7/16
	6	54	12	5	7	10 ½	1	1-7	1-7	3-10	7-10 ½	14-10 5/16	17-4 5/16	14-2	16-8	42-6 ½
10	5	50	10	11	8	11	1	1-5	1-2	3-3	6-11	13-0 ½	14-8 ½	12-3	14-0	39-4 5/16
	6	60	10	6	8	11	1	1-7	1-7	3-10	7-11	14-11 ½	17-5 ½	14-2	16-8	43-11 5/16

BILL OF REINFORCING STEEL FOR 44'-0" CULVERT

BARREL REINFORCEMENT

OPENING CLEAR SPAN	BARS A SIZE	BARS A No.	BARS A LGTH. FT-IN.	BARS A SPAC. IN.	BARS A1 SIZE	BARS A1 No.	BARS A1 LGTH. SHORT BAR FT-IN.	BARS A1 VAR. IN.	BARS A1 LONG BAR FT-IN.	BARS A1 SPAC. IN.	#4 BARS B No.	#4 BARS B LGTH. FT-IN.	#4 BARS B SPAC. IN.	#4 BARS C No.	#4 BARS C LGTH. FT-IN.
8	#6	198	10-0½	5	#6	40	2-5	8.6667	8-11	5	94	5-4	12	26	47-5
	#6	198	10-0½	5	#6	40	2-5	8.6667	8-11	5	94	6-4	12	28	47-5
	#6	198	10-2½	5	#6	40	2-6	8.6667	8-0	5	94	7-4	12	30	47-5
9	#7	162	11-5½	6	#7	40	2-7	10.4444	10-5	6	84	6-5	12	30	47-5
	#7	162	11-5½	6	#7	40	2-7	10.4444	10-5	6	84	7-5	12	32	47-5
10	#7	160	12-7½	6	#7	44	2-8	10.4000	11-4	6	84	6-6	12	32	47-5
	#7	160	12-7½	6	#7	44	2-8	10.4000	11-4	6	84	7-6	12	34	47-5

WING AND CURB REINFORCEMENT

OPENING CLEAR SPAN	#4 BARS E No.	#4 BARS E LGTH. FT-IN.	#4 BARS E SPAC. IN.	#4 BARS F No.	#4 BARS F LGTH. FT-IN.	#4 BARS F1 No.	#4 BARS F1 LGTH. FT-IN.	#4 BARS F2 No.	#4 BARS F2 LGTH. FT-IN.	#4 BARS F3 No.	#4 BARS F3 LGTH. FT-IN.	#4 BARS J No.	#4 BARS J LGTH. FT-IN.	#4 BARS J1 No.	#4 BARS J1 LGTH. FT-IN.	#6 BARS M No.	#6 BARS M LGTH. FT-IN.	#6 BARS M1 No.	#6 BARS M1 LGTH. FT-IN.	#4 BARS N No.	#4 BARS N LGTH. FT-IN.	#4 BARS O No.	#4 BARS O LGTH. FT-IN.	#4 BARS P No.	#4 BARS P LGTH. FT-IN.	#4 BARS P1 No.	#4 BARS P1 LGTH. FT-IN.	#4 BARS P2 No.	#4 BARS P2 LGTH. FT-IN.	#4 BARS P3 No.	#4 BARS P3 LGTH. FT-IN.	#6 BARS X No.	#6 BARS X LGTH. FT-IN.
8	98	7-8	12	2	11-5	8	2-8	2	13-8	8	3-0	12	8-3	12	10-3	4	12-10	6	10-0	20	4-9	44	2-4	6	9-11	4	11-5	6	11-7	4	16-3	24	2-0
	98	8-10	12	2	13-5	10	2-9	2	15-9	10	3-0	14	10-3	14	12-4	4	12-10	6	10-0	20	4-9	52	2-10	6	11-11	4	13-5	6	13-8	4	16-3	24	2-0
	98	10-10	12	2	13-5	12	2-10	2	16-6	12	3-1	16	12-2	16	15-0	4	13-0	8	10-2	20	4-9	62	3-5	8	13-10	6	15-4	8	16-4	6	19-2	28	2-0
9	98	8-10½	12	2	13-6	10	2-10	2	15-10	10	3-1	14	10-3	14	12-4	4	14-2	6	11-4	24	4-10	52	2-10	8	11-11	4	13-5	6	13-8	4	16-3	24	2-0
	98	10-0½	12	2	15-5	12	2-10	2	18-6	12	3-1	16	12-2	16	15-0	4	14-2	6	11-4	24	4-10	62	3-5	8	13-10	6	15-4	8	16-4	6	19-2	28	2-0
10	98	8-11	12	2	13-7	10	2-11	2	15-11	10	3-2	14	10-3	14	12-4	4	15-6	8	12-8	28	4-11	52	2-10	8	11-11	4	13-5	6	13-8	4	16-3	24	2-0
	98	10-1	12	2	15-6	12	2-11	2	18-7	12	3-2	16	12-2	16	15-0	4	15-6	6	12-8	28	4-11	62	3-5	8	13-10	6	15-4	8	16-4	6	19-2	28	2-0

QUANTITIES

OPENING CLEAR SPAN	OPENING CLEAR HEIGHT	PER LINEAR FT. OF BARREL STEEL LBS.	PER LINEAR FT. OF BARREL CONC. CU. YDS.	44'-0" CULVERT STEEL LBS.	44'-0" CULVERT CONC. CU. YDS.
FT.	FT.				
8	4	86.89	0.7130	3457	45.78
	5	99.56	0.7500	3813	51.56
	6	103.44	0.8344	6401	60.71
9	5	122.30	0.8843	8918	58.01
	6	124.97	0.9275	7447	65.21
10	5	133.28	1.0257	7450	64.77
	6	135.95	1.0751	7950	72.27

① Includes 1'-6" Lap Splice

Ⓐ #6 Bars "X" to be ¾" ø Smooth and Greased for 1'-0" of Length.

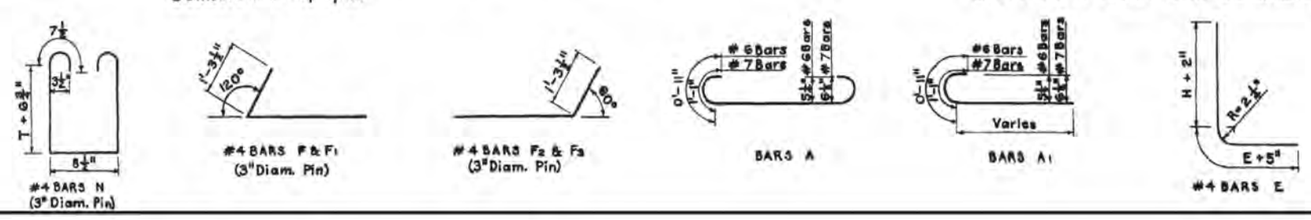

DATE	DESCRIPTION	BY
1-11-78	Rev. Weep Hole Note.	W.T.J.
2-20-75	Rev. Slope Intercept	W.T.J.
6-8-72	Rev. General Notes for Steel	W.E.M.

REVISIONS

STANDARD PLAN

REINFORCED CONCRETE BOX CULVERT
STRAIGHT WINGS 60° CROSSING
2:1 SPILL SLOPE
8' TO 10' SPANS 4' TO 6' HEIGHTS

DATED JAN. 6, 1972

STATE OF LOUISIANA
DEPARTMENT OF HIGHWAYS

DESIGNED	DETAILED J.J. RIBAS	TRACED M. LANOUX
CHECKED	CHECKED J.D. BACCI	CHECKED J.J. RIBAS

FOR INFORMATIONAL USE

28-NOV-2007 10:05
R:\Standard Plans\English\Old Sheets\CCSS8-10R60_1.dgn

3/15/2017 09:04

IP PWP:dms09544\CCSS8-10R75_1.dgn

F.A.P.	STATE PROJECT	PARISH	SHEET NO.

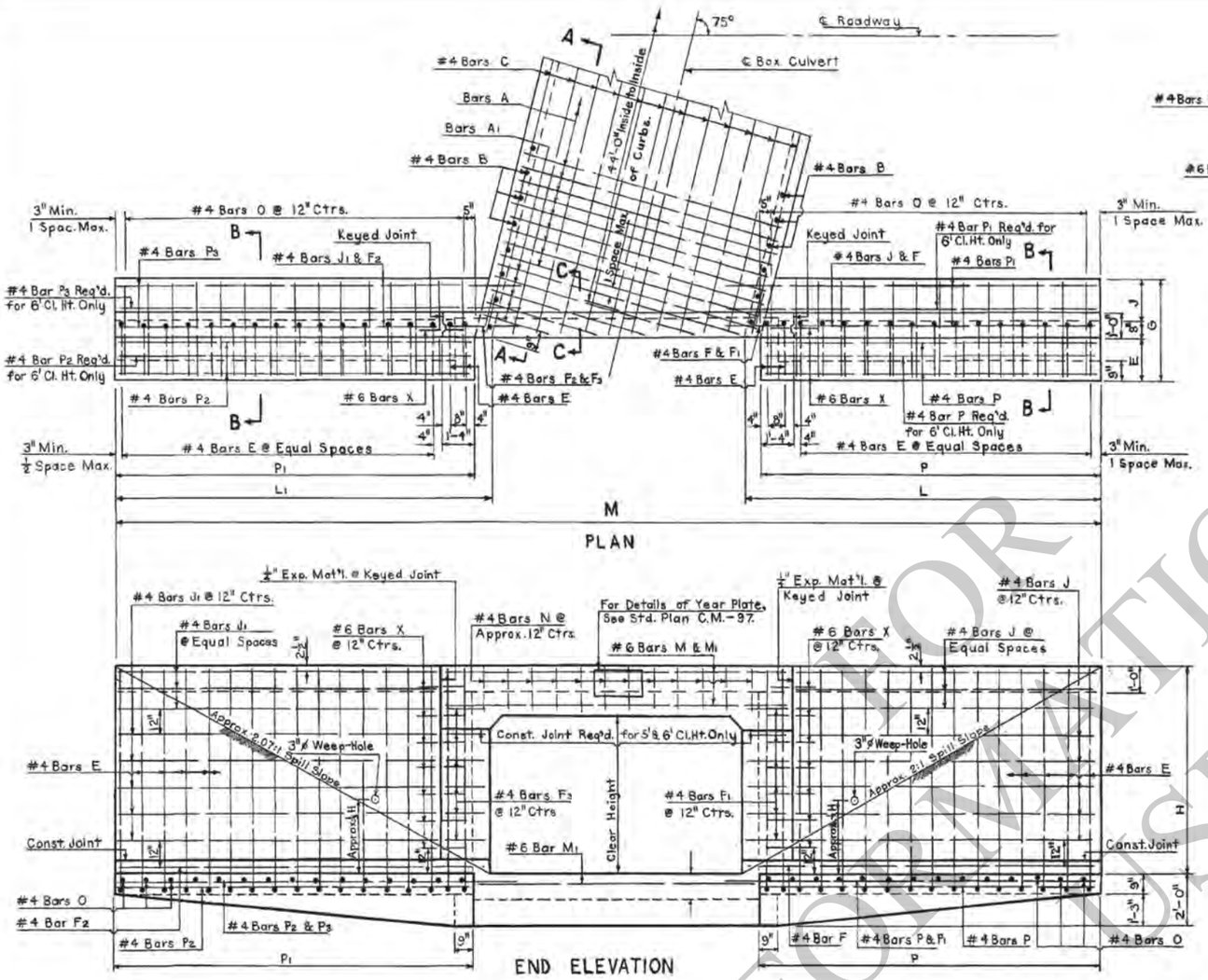

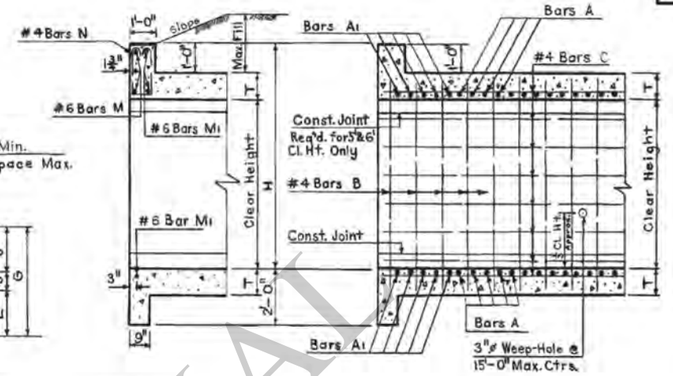

SECTION C-C

SECTION A-A

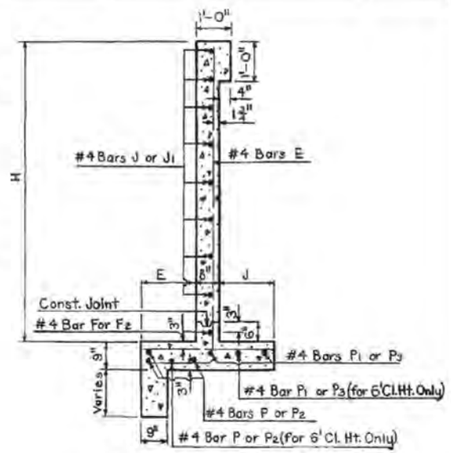

SECTION B-B

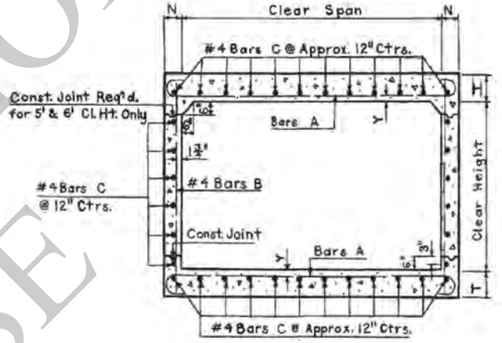

SECTION THRU BARREL

GENERAL NOTES:

Construction Specifications: Latest Approved La. Department of Highways Standard Specifications.

Design Specifications: A.A.S.H.O. 1969 as Amended to 1971.

Live Load: H. S. 20-44 or Military Loading Whichever is Greater.

All Concrete to be Class "A".

All Exposed Corners to have ¾" Chamfer, Unless Otherwise Noted.

Reinforcement Shall be Billet-Steel A.S.T.M. A615 or Rail-Steel A.S.T.M. A616 or Axle-Steel A.S.T.M. A617.

Dimensions Relating to Reinforcing Steel are to Bar Centers.

A 1'-6" Square of Plastic Filter Cloth (See Qualified Products List) Shall be places in contact with Concrete behind each Weep Hole, in addition to Approx. 2 Cu. Ft. of Concrete Sand.

For Details of Joints, See Std. Plan C.M-49.

C. C. S. S. 8-10-R-75°-1

APPROVED BY:
Dempsey D. White
CHIEF ENGINEER

1-11-78
DATE

| DIMENSIONS | | |

09:08
26-SEP-2011

F.A.P.	STATE PROJECT	PARISH	SHEET NO.

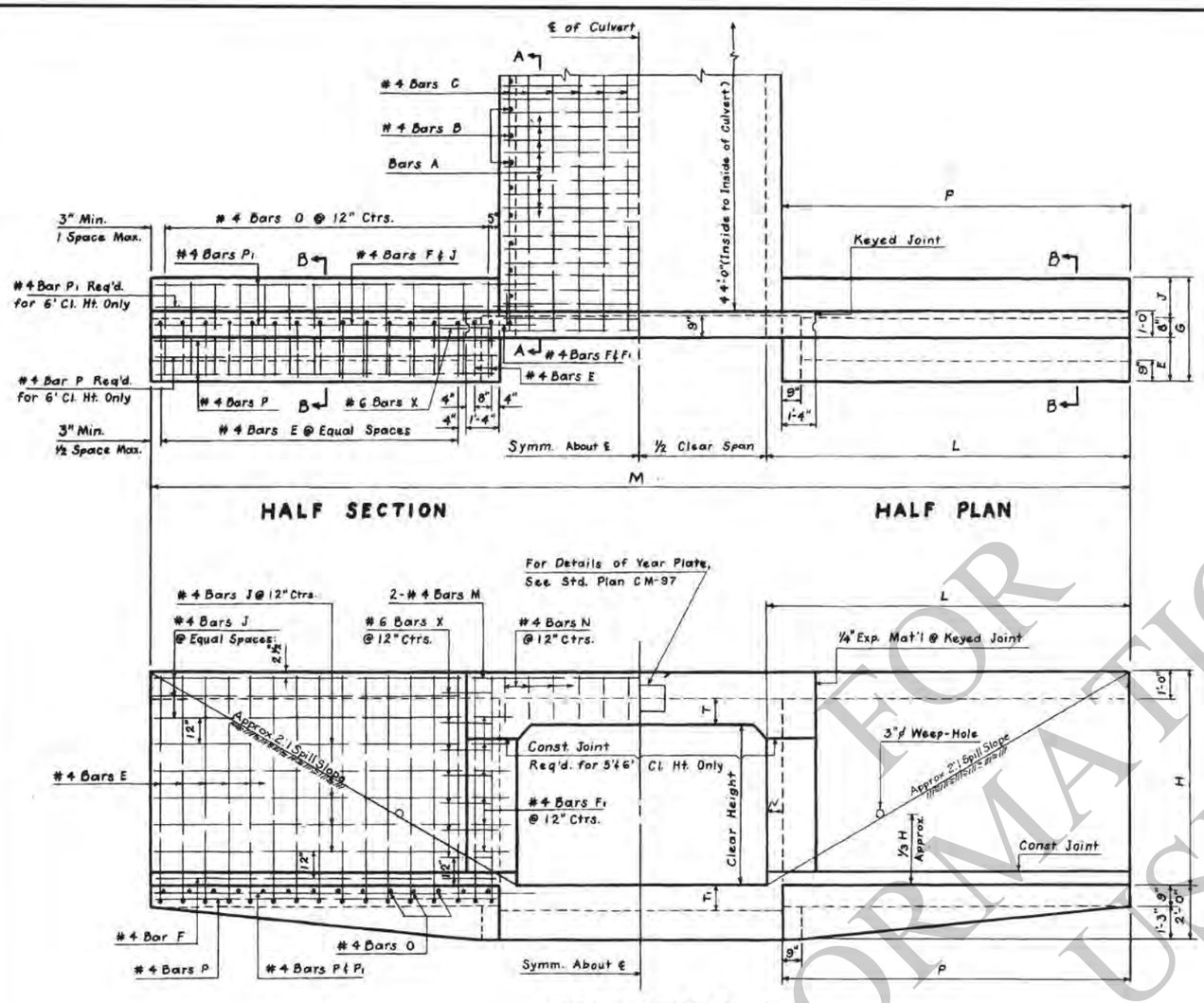

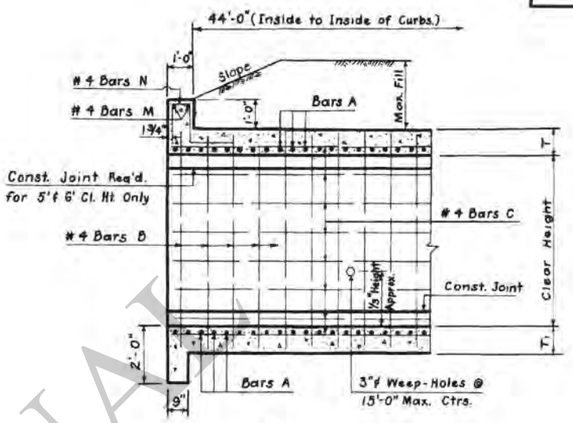

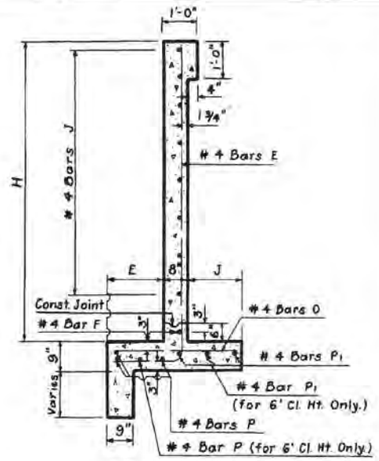

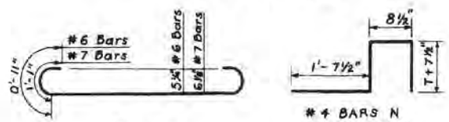

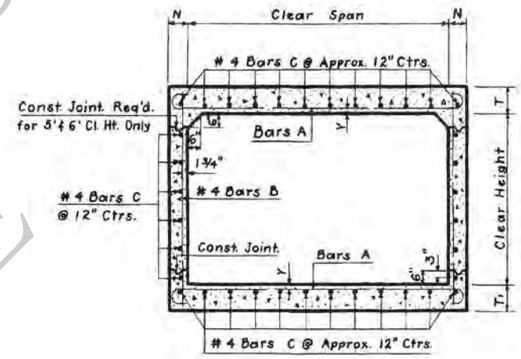

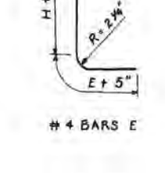

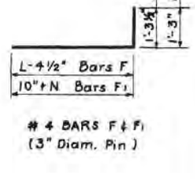

DIMENSIONS

OPENINGS CLEAR SPAN (FT.)	OPENINGS CLEAR HEIGHT (FT.)	MAX. FILL AREA (SQ. FT.)	MAX. FILL SLAB (FT.)	MAX. FILL WALL (FT.)	BARREL N (IN.)	BARREL T (IN.)	BARREL T1 (IN.)	BARREL Y (IN.)	WINGS & CURBS E (FT.-IN.)	WINGS & CURBS J (FT.-IN.)	WINGS & CURBS G (FT.-IN.)	WINGS & CURBS H (FT.-IN.)	WINGS & CURBS L (FT.-IN.)	WINGS & CURBS P (FT.-IN.)	WINGS & CURBS M (FT.-IN.)
8	4	32	14	11	6	10	10	1⅞	1-3	0-10	2-9	5-10	10-8	10-2	29-4
	5	40	13	6	6	10	10	1⅞	1-5	1-2	3-3	6-10	12-8	12-2	33-4
	6	48	13	5	7	10	10	1⅞	1-7	1-7	3-10	7-10	14-7	14-0	37-2
9	5	45	12	8	7	10½	10½	1 15/16	1-5	1-2	3-3	6-10½	12-9	12-2	34-6
	6	54	12	5	7	10½	10½	1 15/16	1-7	1-7	3-10	7-10½	14-7	14-0	38-2
10	5	50	10	11	8	11	11	1 15/16	1-5	1-2	3-3	6-11	12-10	12-2	35-8
	6	60	10	6	8	11	11	1 15/16	1-7	1-7	3-10	7-11	14-8	14-0	38-4

BILL OF REINFORCEMENT STEEL FOR 44'-0" CULVERT.

BARREL REINFORCEMENT: BARS A SIZE	BARS A No.	BARS A LENGTH (FT.-IN.)	BARS A SPAC. (IN.)	#4 BARS B No.	#4 BARS B LENGTH (FT.-IN.)	#4 BARS B SPAC. (IN.)	#4 BARS C No.	#4 BARS C LENGTH (FT.-IN.)
#6	220	10-0½	5	92	5-4	12	26	47-2
#6	220	10-0½	5	92	6-4	12	28	47-2
#6	220	10-2½	5	92	7-4	12	30	47-2
#7	184	11-5½	6	92	6-5	12	30	47-2
#7	184	11-5½	6	92	7-5	12	32	47-2
#7	184	12-7½	6	92	6-6	12	32	47-2
#7	184	12-7½	6	92	7-6	12	34	47-2

WINGS AND CURBS REINFORCEMENT Ⓐ: #4 BARS E No.	#4 BARS E LENGTH (FT.-IN.)	#4 BARS E SPAC. (IN.)	#4 BARS F No.	#4 BARS F LENGTH (FT.-IN.)	#4 BARS F1 No.	#4 BARS F1 LENGTH (FT.-IN.)	#4 BARS J No.	#4 BARS J LENGTH (FT.-IN.)	#4 BARS M No.	#4 BARS M LENGTH (FT.-IN.)	#4 BARS N No.	#4 BARS N LENGTH (FT.-IN.)	#4 BARS O No.	#4 BARS O LENGTH (FT.-IN.)	#4 BARS P No.	#4 BARS P LENGTH (FT.-IN.)	#4 BARS P1 No.	#4 BARS P1 LENGTH (FT.-IN.)	#6 BARS X No.	#6 BARS X LENGTH (FT.-IN.)
44	7-8	12	4	11-7	16	2-7	24	8-6	4	11-1	18	5-3	40	2-4	12	9-10	8	11-6	20	2-0
52	8-10	12	4	13-7	20	2-7	28	10-6	4	11-1	18	5-3	48	2-10	12	11-10	8	13-6	24	2-0
64	10-0	11	4	15-6	24	2-8	32	12-4	4	11-3	20	5-3	56	3-5	16	13-8	12	15-4	28	2-0
52	8-10½	12	4	13-8	20	2-8	28	10-6	4	12-3	22	5-4	48	2-10	12	11-10	8	13-6	24	2-0
64	10-0½	11	4	15-6	24	2-8	32	12-4	4	12-3	22	5-4	56	3-5	16	13-8	12	15-4	28	2-0
52	8-11	12	4	13-9	20	2-9	28	10-6	4	13-5	24	5-5	48	2-10	12	11-10	8	13-6	24	2-0
64	10-1	11	4	15-7	24	2-9	32	12-4	4	13-5	24	5-5	56	3-5	16	13-8	12	15-4	28	2-0

QUANTITIES

PER LIN. FT. OF BARREL: STEEL (LBS.)	CONC. (CU. YDS.)	44'-0" CULVERT: STEEL (LBS.)	CONC. (CU. YDS.)	OPENING CLEAR SPAN (FT.)	OPENING CLEAR HEIGHT (FT.)
96.89	0.7130	5241	44.44	8	4
99.56	0.7500	5386	50.05		5
103.44	0.8344	6126	58.38		6
122.30	0.8843	6667	56.41	9	5
124.97	0.9275	7143	62.84		6
133.28	1.0257	7188	63.10	10	5
135.95	1.0751	7664	69.82		6

① Includes 1'-6" Lap Splice.

Ⓐ #6 Bars X to be ¾" ø Smooth and Greased for 1'-0" of Length.

GENERAL NOTES:

Construction Specifications: Latest Approved La. Dept. of Highways Standard Specifications.

Design Specifications: A.A.S.H.O. 1969 as Amended to 1971.

Live Load: HS 20-44 or Military Loading Whichever is Greater.

All Concrete to be Class "A".

All Exposed Corners to have ¾" Chamfer Unless Otherwise Noted.

Reinforcement Shall be Billet-Steel A.S.T.M. A615 or Rail-Steel A.S.T.M. A616 or Axle-Steel A.S.T.M. A617.

Dimensions Relating to Reinforcing Steel are to Bar Centers.

A 1'-6" Square of Plastic Filter Cloth (See Qualified Products List) Shall be placed in contact with Concrete behind each Weep Hole, in addition to approx. 2 Cu. Ft. of Concrete Sand.

For Detail of Joints, See Std. Plan C.M.-48.

APPROVED BY:

CHIEF ENGINEER — DATE 1-11-78

C.C.S.S. 8-10-R-90°-1

STANDARD PLAN
REINFORCED CONCRETE BOX CULVERT
STRAIGHT WINGS 90° CROSSING
2:1 SPILL SLOPE
8' TO 10' SPANS 4' TO 6' HEIGHTS
DATED NOV. 30 19 71

DATE	DESCRIPTION	BY
1-11-78	Rev. Weep Hole Note	W.T.J.
1-28-75	Rev. Slope Intercept	W.T.J.
6-8-72	Rev. General Notes for Steel	W.E.M.

REVISIONS

STATE OF LOUISIANA
DEPARTMENT OF HIGHWAYS

DESIGNED	DETAILED J.J. RIBAS	TRACED E.B. ALLEN
CHECKED	CHECKED J.D. BACCI	CHECKED J.D. BACCI

FOR INFORMATIONAL USE

IP_PWP:dms09544\CCSS8-10R90_1.dgn

F.A.P.	STATE PROJECT	PARISH	SHEET NO.

BILL OF REINFORCING STEEL FOR 44'-0" CULVERT

OPENINGS CLEAR SPAN FEET	OPENINGS CLEAR HEIGHT FEET	BARREL REINFORCEMENT: BARS A SIZE	BARS A NO.	BARS A LENGTH FT-IN.	BARS A SPAC. IN.	BARS A1 SIZE	BARS A1 NO.	BARS A1 SHORT FT-IN.	BARS A1 VAR. IN.	BARS A1 LONG FT-IN.	BARS A1 SPAC. IN.	BARS B SIZE	BARS B NO.	BARS B LENGTH FT-IN.	BARS B SPAC. IN.	BARS B1 SIZE	BARS B1 NO.	BARS B1 SHORT FT-IN.	BARS B1 VAR. IN.	BARS B1 LONG FT-IN.	BARS B1 SPAC. IN.	#4 BARS C NO.	#4 BARS C LENGTH FT-IN.	BARS D E D1 SIZE	BARS D E D1 NO.	BARS D E D1 LENGTH D FT-IN.	BARS D E D1 LENGTH D1 FT-IN.	BARS D E D1 SPAC. IN.
12	8																											
	9																											
	10																											
	11																											
	12	#7	92	15-3½	5½	#7	16	3-10	12TH	14-1	5½	#8	78	15-10½	6½	#8	12	4-1	24TH	14-2	6½	#8	378	#7-2	#6	116	3-7	12-5	9½

OPENINGS CLEAR SPAN FEET	OPENINGS CLEAR HEIGHT FEET	WINGS AND CURB REINFORCEMENT: BARS E E1 SIZE	BARS E E1 NO.	BARS E E1 LENGTH E FT-IN.	BARS E E1 LENGTH E1 FT-IN.	BARS E E1 SPAC. IN.	#4 BARS F NO.	#4 BARS F LENGTH FT-IN.	#4 BARS F1 NO.	#4 BARS F1 LENGTH FT-IN.	#4 BARS F2 NO.	#4 BARS F2 LENGTH FT-IN.	#4 BARS J NO.	#4 BARS J LENGTH FT-IN.	#6 BARS M NO.	#6 BARS M LENGTH FT-IN.	#4 BARS N NO.	#4 BARS N LENGTH FT-IN.	BARS O SIZE	BARS O NO.	BARS O LENGTH FT-IN.	BARS O SPAC. IN.	#4 BARS P NO.	#4 BARS P LENGTH FT-IN.	#4 BARS P1 NO.	#4 BARS P1 LENGTH FT-IN.	#4 BARS R NO.	#4 BARS R LENGTH FT-IN.	#4 BARS R1 NO.	#4 BARS R1 LENGTH FT-IN.	#4 BARS R2 NO.	#4 BARS R2 LENGTH FT-IN.	#6 BARS X NO.	#6 BARS X LENGTH FT-IN.
12	8																																	
	9																																	
	10																																	
	11																																	
	12	#7	2	27-11	24	3-2	2	28-11	24	3-5	28	29-4	23	25-1	4	16-11	6	14-1	30	5-3	#6	6-11	11	10	25-11	8	27-4	10	26-6	8	29-3	52	2-0		

Ⓐ #6 Bars A to be 36" Smooth and Greased for 1'-0" of Length.

GENERAL NOTES:

CONSTRUCTION SPECIFICATIONS: Latest Approved La. Dept. of Hwys. Standard Specifications.
DESIGN SPECIFICATIONS: A.A.S.H.O. 1961 as amended to Sept 1961.
LIVE LOAD: H-20, S16-44.
All concrete to be Class "A".
All exposed corners to have ¾" chamfers, unless otherwise noted.
Reinforcement shall be billet steel A.S.T.M. A 615 or Rail-Steel A.S.T.M. A 616 or Axle-Steel A.S.T.M. A 617.
Dimensions relating to reinforcing steel are to bar centers.
A 1'-0" Square of Plastic Filter Cloth (See Qualified Products List) shall be placed in contact with Concrete behind each Weep Hole in addition to approx. 4 Cu. Ft. of Concrete Sand.
For Detail of Joints, See Std. Plan C.M.-4B.

Ⓑ Includes 1'-6" Lap Splice

SECTION C-C

#4 BARS F, F1 F2 (3" Diam. Pin)

BARS A & B

BARS A1 & B1

#4 BARS F3 F4 F5 (3" Diam. Pin)

PLAN

END ELEVATION

SECTION A-A

#4 BARS N (3" Diam. Pin)

BARS E

SECTION THRU BARREL

SECTION B-B

DIMENSIONS

OPENINGS CLEAR SPAN FT.	OPENINGS CLEAR HEIGHT FT.	MAX. FILL AREA SQ. FT.	MAX. FILL SLAB FT.	MAX. FILL WALL FT.	BARREL N IN.	BARREL T IN.	BARREL T1 IN.	BARREL X IN.	BARREL Y IN.	BARREL Z IN.	WINGS AND CURBS B FT-IN.	WINGS AND CURBS E FT-IN.	WINGS AND CURBS F FT-IN.	WINGS AND CURBS J FT-IN.	WINGS AND CURBS G FT-IN.	WINGS AND CURBS H FT-IN.	WINGS AND CURBS D IN.	WINGS AND CURBS L FT-IN.	WINGS AND CURBS L1 FT-IN.	WINGS AND CURBS P FT-IN.	WINGS AND CURBS P1 FT-IN.	WINGS AND CURBS M FT-IN.
12	8																					
	9																					
	10																					
	11																					
	12	144	6	6	12	13	13	2	1 13/16	1 7/8	1-0	3-0	1-3	3-4	7-4	14-1	11 5/8	27-3½	27-10½	26-3	2C-10	17-6 13/16

QUANTITIES

OPENINGS CLEAR SPAN FEET	OPENINGS CLEAR HEIGHT FEET	PER LINEAR FOOT OF BARREL STEEL LBS.	PER LINEAR FOOT OF BARREL CONC. CU. YDS.	44'-0" CULVERT STEEL LBS.	44'-0" CULVERT CONC. CU. YDS.
12	8				
	9				
	10				
	11				
	12	240.56	2.021C	13,874	100.42

CC-S-S-12-RS-75°-2

APPROVED BY: _____ CHIEF ENGINEER — 1-11-78 DATE

NO.	DESCRIPTION	BY
1	1-1-73 Some Minor Revisions	R.L.P.
2	6-26-78 Additional Steel Shown	R.F.J.
3	8-8-78 Plans Corrected for Offset	W.B.M.
4	9-1961 Revised Detail Sheet	W.E.B.
5	3-1962 Revised Specs. & Notes	W.E.B.

STANDARD PLAN
REINF. CONCRETE BOX CULVERT
STRAIGHT WINGWALLS 75° CROSSING
2:1 SPILL SLOPE NORMAL TO CHANNEL
12' CLEAR SPAN 8' TO 12' CLEAR HGHT.
DATED Sept. 1961 1962

STATE OF LOUISIANA
DEPARTMENT OF HIGHWAYS
DESIGNED B.G.N. DETAILED A.M.B. TRACED Z.A.
CHECKED B.G.N. CHECKED B.G.N. CHECKED
IN CHARGE OF BRIDGE DESIGN SECTION

T.P. PWP:dms09544\CCSS12RS75_2.dgn
8/13/2012 14:59

INFORMATIONAL USE

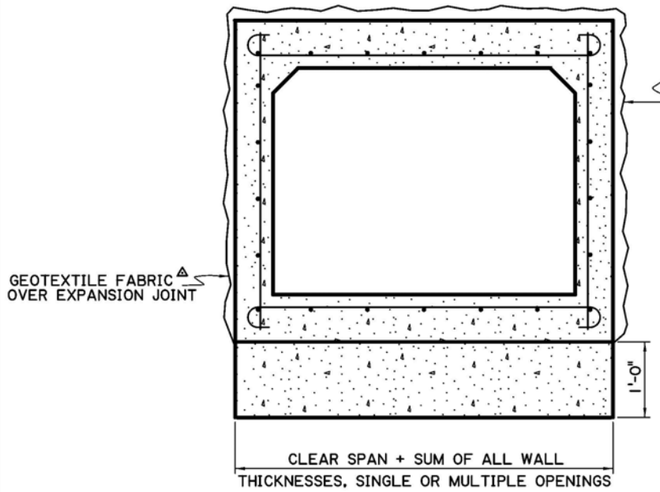

SECTION A-A

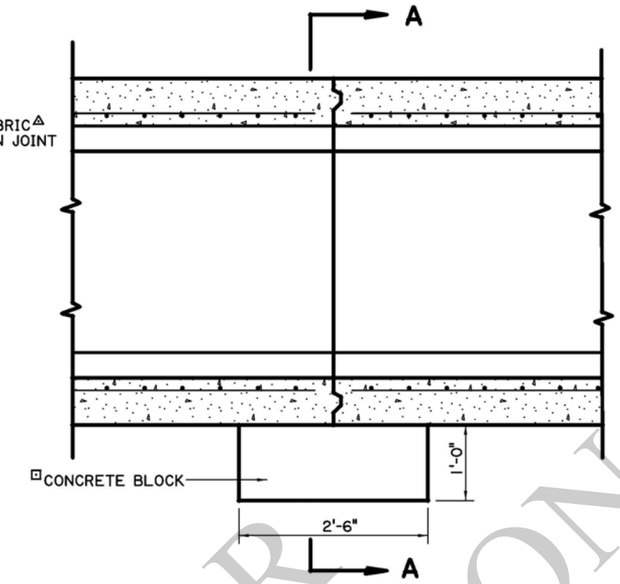

LONGITUDINAL BARREL SECTION

KEYED EXPANSION JOINTS (SEE DETAIL "A") TO BE SPACED SO THAT BARREL SHALL NOT BE CONTINUOUS FOR MORE THAN 200'. NO REINFORCING STEEL SHALL EXTEND THROUGH JOINT.

⊡CONCRETE BLOCK TO BE PAID FOR AS CLASS "A" CONCRETE. CONCRETE BLOCK IS NOT REQUIRED IF A WORKING TABLE (DRY BOTTOM) IS CAST AS A BASE FOR PLACEMENT IN THE FIELD.

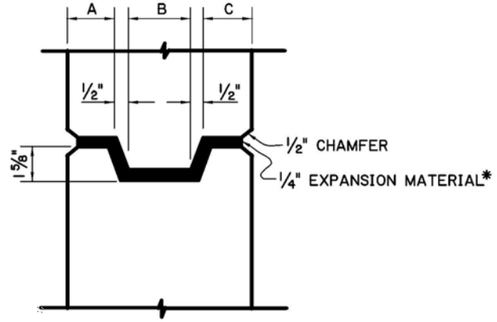

DETAIL "A"
KEYED EXPANSION JOINT

*IN ACCORDANCE WITH PROJECT SPECIFICATIONS FOR PREFORMED JOINT FILLERS (PREFORMED RESILIENT BITUMINOUS TYPES)

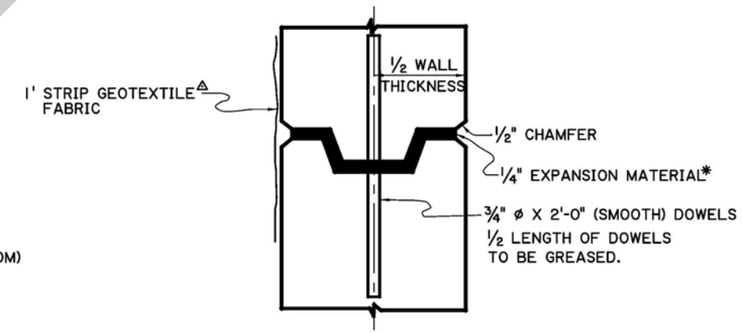

DETAIL "B"
KEYED & DOWELED EXPANSION JOINT

(FOR BOX CULVERT WING WALLS)

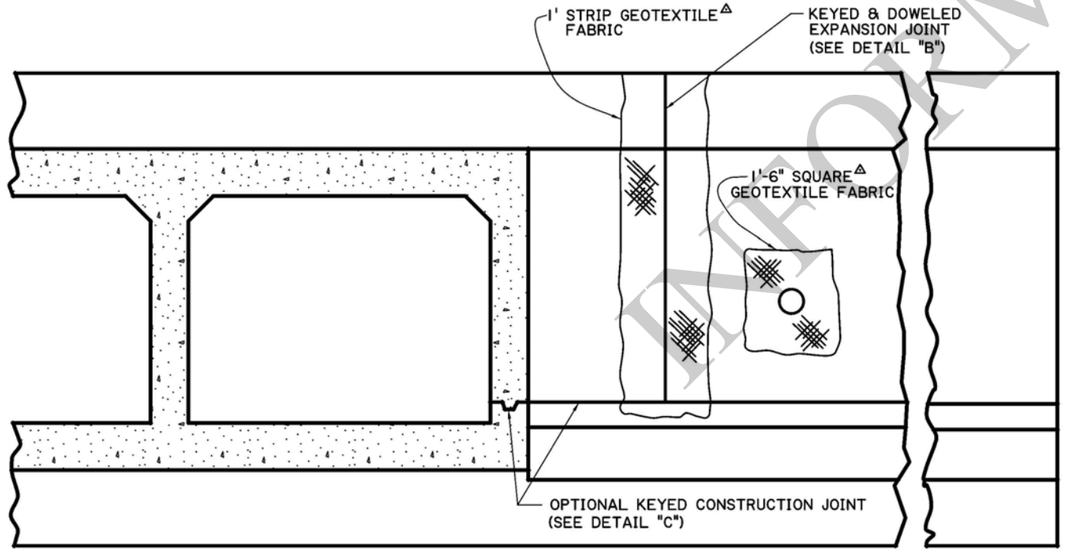

SECTION SHOWING REAR SIDE OF WING WALL

WALL OR SLAB	A	B	C
6"	1½"	2"	1½"
6½"	1⅝"	2¼"	1⅝"
7"	1¾"	2½"	1¾"
7½"	2"	2½"	2"
8"	2⅛"	2¾"	2⅛"
8½"	2⅜"	2¾"	2⅜"
9"	2½"	3"	2½"
9½"	2¾"	3"	2¾"
10"	2⅞"	3¼"	2⅞"
10½"	3"	3½"	3"
11"	3⅛"	3¾"	3⅛"
11½"	3¼"	4"	3¼"
12"	3½"	4"	3½"

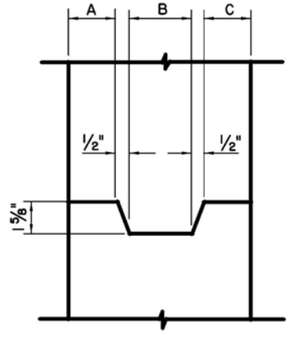

DETAIL "C"
KEYED CONSTRUCTION JOINT

△IN ACCORDANCE WITH PROJECT SPECIFICATIONS FOR GEOTEXTILE FABRIC

INFORMATIONAL USE

SHEET NUMBER

PARISH | CONTROL SECTION | STATE PROJECT

DESIGN | DETAIL MN | REVIEW | SERIES # 1 OF 1

CHECK | CHECK PAA

APPROVED BY CHIEF ENGINEER: DATE: 6/1/2026

NO.	DATE	REVISION OR CHANGE ORDER DESCRIPTION	BY

STATE OF LOUISIANA DEPARTMENT OF TRANSPORTATION AND DEVELOPMENT

EXPANSION AND CONSTRUCTION JOINT FOR CONCRETE STRUCTURES

CM-49

DOTD LOUISIANA DEPARTMENT OF TRANSPORTATION & DEVELOPMENT

STANDARD PLAN

CONCRETE COLLAR DETAIL

TO REPAIR EXISTING PIPE JOINT SEPARATION
AND/OR
TO CONNECT EXISTING PIPE TO NEW PIPE

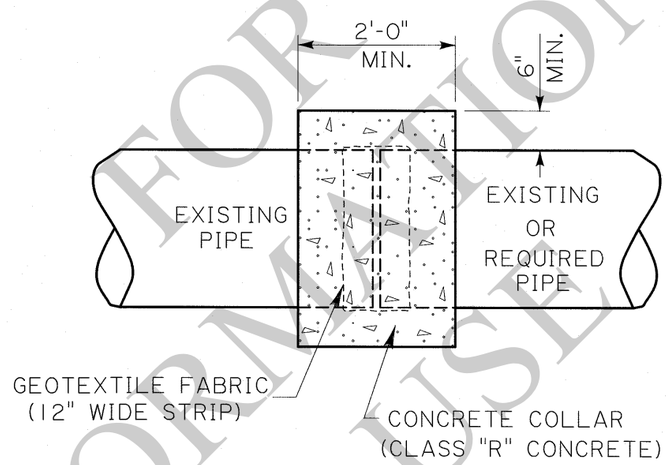

FOR INFORMATIONAL USE

NOTES:

1) NEW PIPE EXTENSION SHALL MATCH EXISTING PIPE IN MATERIAL TYPE AND SIZE BASED ON THE LATEST INDUSTRY STANDARDS.

SHEET NUMBER

PARISH | CONTROL SECTION | STATE PROJECT

DESIGN CHECK | DETAIL CHECK | REVIEW | SERIES # 1 OF 1

APPROVED BY CHIEF ENGINEER:

DATE: 6/1/2026

NO. | DATE | REVISION OR CHANGE ORDER DESCRIPTION | BY

STATE OF LOUISIANA DEPARTMENT OF TRANSPORTATION AND DEVELOPMENT

CONCRETE COLLAR DETAIL

COLLAR-01

DOTD LOUISIANA DEPARTMENT OF TRANSPORTATION & DEVELOPMENT

STANDARD PLAN

PLAN VIEW

ROADWAY SHOWING JOINTS

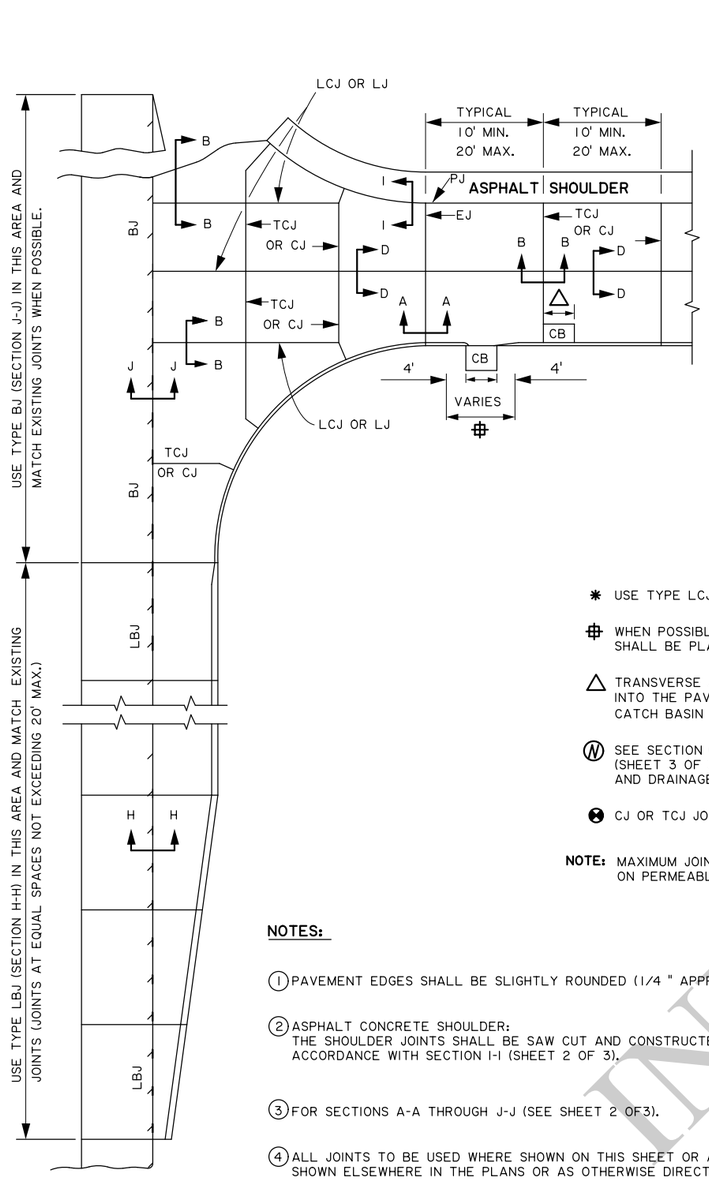

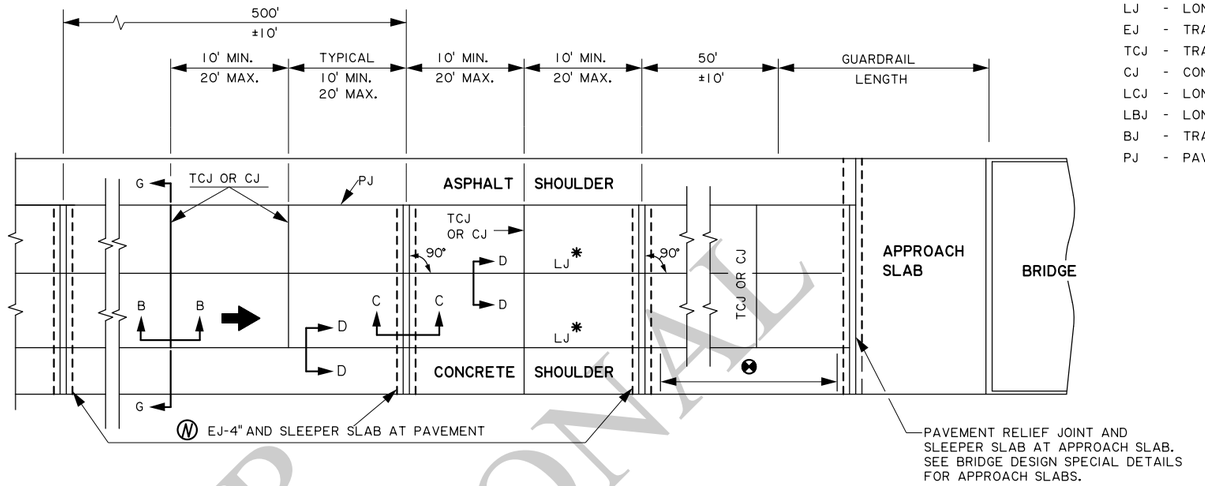

JOINT ABBREVIATIONS:

- LJ - LONGITUDINAL JOINT
- EJ - TRANSVERSE EXPANSION JOINT
- TCJ - TRANSVERSE CONTRACTION JOINT
- CJ - CONSTRUCTION JOINT
- LCJ - LONGITUDINAL CONSTRUCTION JOINT
- LBJ - LONGITUDINAL BUTT JOINT
- BJ - TRANSVERSE BUTT JOINT
- PJ - PAVEMENT EDGE SEAL JOINT

* USE TYPE LCJ JOINT WITH SPLIT SLAB CONSTRUCTION.

⌗ WHEN POSSIBLE, AT CATCH BASINS NO JOINTS SHALL BE PLACED IN THE LIMITS SHOWN.

△ TRANSVERSE JOINTS NEAR CATCH BASIN (CB-07, 08 & 09) THAT EXTEND INTO THE PAVEMENT SHALL BE ADJUSTED TO COINCIDE WITH ONE EDGE OF THE CATCH BASIN OR THE CENTER OF THE CATCH BASIN. SEE DETAIL E (SHEET 3 OF 3).

Ⓝ SEE SECTION C-C (SHEET 2 OF 3) AND DETAIL "G" (SHEET 3 OF 3) FOR EJ-4" JOINT, SLEEPER SLAB AND DRAINAGE DETAILS. (REQUIRED (3) PLACES.)

⊗ CJ OR TCJ JOINTS AT 20' MAX. CTRS.

NOTE: MAXIMUM JOINT SPACING AT 18' WHEN PAVEMENT IS PLACED ON PERMEABLE BASE. (SEE SECTION 307)

TABLE I - SCHEDULE OF DIMENSIONS

(ALL DIMENSIONS ARE IN INCHES)

SLAB THICKNESS	SMOOTH DOWEL ⊗ BARS			DEFORMED TIE ⊠ BARS			KEYWAY ⊕	
"T"	SIZE (DIA.)	LENGTH	SPACING	SIZE (DIA.)	LENGTH	SPACING	A ±1/4"	B ±1/4"
8	1 1/4	18	12	1/2	24	24	2 1/2	1 1/4
9	1 1/4	18	12	1/2	24	24	2 1/2	1 1/4
10	1 1/2	18	12	1/2	24	24	2 1/2	1 1/4
11	1 1/2	18	12	5/8	30	24	2 1/2	1 1/4
12	1 1/2	18	12	5/8	30	24	3	1 1/2
13	1 1/2	18	12	5/8	30	24	3	1 1/2
14	1 1/2	18	12	5/8	30	24	3	1 1/2

NOTES:

(1) PAVEMENT EDGES SHALL BE SLIGHTLY ROUNDED (1/4 " APPROX.).

(2) ASPHALT CONCRETE SHOULDER:
THE SHOULDER JOINTS SHALL BE SAW CUT AND CONSTRUCTED IN ACCORDANCE WITH SECTION I-I (SHEET 2 OF 3).

(3) FOR SECTIONS A-A THROUGH J-J (SEE SHEET 2 OF3).

(4) ALL JOINTS TO BE USED WHERE SHOWN ON THIS SHEET OR AS SHOWN ELSEWHERE IN THE PLANS OR AS OTHERWISE DIRECTED BY THE ENGINEER.

(5) ON TYPE EJ ALTERNATE JOINTS, SPOT WELD ALTERNATE ENDS OF DOWEL BARS TO DOWEL BASKETS AND PLACE EXPANSION TUBES ON FREE ENDS OF DOWEL BARS.

(6) FOR DESIGN SPEEDS GREATER THAN 45MPH:
SAW CUT AND CONSTRUCT THE TYPE LJ, TCJ, AND CJ JOINTS AS IN DETAILS "A, B OR C" TO A DEPTH OF T/3 INCHES. THOROUGHLY CLEAN THE JOINT FACES BY SANDBLASTING; FOLLOWED BY AN OIL-FREE AIR JET IMMEDIATELY PRIOR TO SEALING WITH A POURED OR EXTRUDED SEALANT CONFORMING TO SECTION 1005.

(7) FOR DESIGN SPEEDS OF 45MPH OR LESS:

A. SAW CUT AND SEAL TYPE LJ JOINTS AS DESCRIBED IN NOTE 6.

B. CONSTRUCT TYPE TCJ OR CJ JOINTS AS DESCRIBED IN NOTE 6 OR CONSTRUCT WITH A REMOVABLE FORMING DEVICE AS SPECIFIED IN DETAIL "C" (SHEET 3 OF 3). THOROUGHLY CLEAN THE JOINT FACES BY SAND-BLASTING; FOLLOWED BY AN OIL-FREE AIR JET IMMEDIATELY PRIOR TO SEALING WITH A POURED OR EXTRUDED SEALANT CONFORMING TO SECTIONS 601 AND 1005.
WITH A COMBINATION JOINT FORMER/SEALER AS SHOWN IN DETAIL "D" (SHEET 3 OF 3), THE SEALER SHALL CONFORM TO SECTION 1005 AND BE INSTALLED IN ACCORDANCE WITH SECTION 601 AND NO ADDITIONAL SEALANT IS REQUIRED.

(8) EXCEPT AS NOTED BELOW, DOWEL BARS & TIE BARS SHALL BE HELD IN PLACE BY SUPPORTS SIMILAR TO THE ONES SHOWN, OR APPROVED EQUALS. APPROVED MECHANICAL PLACEMENT OF DOWEL BARS AND TIE BARS WILL BE ALLOWED WITH ALL PAVING METHODS.

(9) INSTALL GEOTEXTILE FABRIC (TYPE B, C, OR D) UNDER ALL TCJ, CJ, AND EJ ALTERNATE JOINTS WHEN CONCRETE PAVEMENT IS PLACED ON PERMEABLE BASE. WHEN DOWEL BARS ARE MECHANICALLY IMPLANTED, THE GEOTEXTILE FABRIC SHALL BE ANCHORED TO THE BASE COURSE WITH PINS.

(10) WHEN CONSTRUCTING CONCRETE CURB AND GUTTER ADJACENT TO NEW P.C.C. PAVEMENT, USE TYPE LCJ JOINT. WHEN ADJACENT TO EXISTING P.C.C. PAVEMENT, USE TYPE LBJ JOINT. THE FIRST LOAD TRANSFER DEVICE SHALL BE INSTALLED 18" FROM THE PAVEMENT EDGE.

(11) TRANSVERSE EXPANSION JOINTS ARE NOT TO BE USED FOR CONSTRUCTION JOINTS.

(12) CONCRETE SHOULDERS:

A. CONSTRUCT TCJ JOINTS IN ACCORDANCE WITH SECTION B-B (SHEET 2 OF 3).

B. CONSTRUCT LCJ JOINTS IN ACCORDANCE WITH TYPE LCJ DETAIL AND LJ JOINTS IN ACCORDANCE WITH TYPE LJ DETAIL. SEE SECTION D-D (SHEET 2 OF 3).

C. USE THE MAXIMUM SHOULDER THICKNESS WHEN DETERMINING DOWEL BAR AND TIE BAR SIZES IN TABLE I.

D. WHEN SKEWED JOINTS ARE USED ON MAINLINE PAVING THE SHOULDER TCJ JOINTS MAY BE SKEWED OR CONSTRUCTED AT 90°.

E. SHOULDER JOINTS AND JOINT MATERIALS SHALL MATCH THE MAINLINE.

F. HEIGHT OF DOWEL BASKET SHALL BE BASED ON THE THINNEST SHOULDER THICKNESS. VARYING HEIGHT DOWEL BASKETS WILL BE ALLOWED TO KEEP THE DOWEL BAR LOCATED WITHIN TOLERANCE.

(13) TIE BARS SHALL NOT BE PLACED WITHIN 18" OF CONTRACTION OR EXPANSION JOINTS.

NOT TO SCALE

INFORMATIONAL USE

SHEET NUMBER

PARISH | CONTROL SECTION | STATE PROJECT

DESIGN T. LAM | CHECK D. SMITH | DETAIL T. LAM | CHECK D. SMITH | REVIEW | SERIES # | OF 3

APPROVED BY CHIEF ENGINEER: DATE: 6/1/2024

NO. | DATE | REVISION OR CHANGE ORDER DESCRIPTION | BY

STATE OF LOUISIANA

PORTLAND CEMENT CONCRETE PAVEMENT DETAILS

CP-01

DOTD LOUISIANA DEPARTMENT OF TRANSPORTATION & DEVELOPMENT

STANDARD PLAN

NOTES:

(A) ONE OR TWO COMPONENT SILICONE CONFORMING TO SECTION 1005.

(B) TAR PAPER EQUIVALENT TO 30 lbs./100 ft² SHALL BE PLACED BETWEEN THE SLEEPER SLAB AND THE PAVING SLAB.

(C) SLEEPER SLAB SHALL BE CONSTRUCTED OF CLASS "A1" OR PAVEMENT TYPE CONCRETE AND INCLUDED IN THE COST OF THE PAVEMENT. PROVIDE DEFORMED GRADE 60 REINFORCING STEEL.

(D) JOINT SHALL BE FILLED WITH A PREFORMED POLYURETHANE FOAM TYPE FILLER CONFORMING TO SECTION 1005.

(E) SEE DETAIL "G" - EJ-4" BASE DRAIN OUTLET FOR UNDERDRAIN DETAILS (SHEET 3 OF 3)

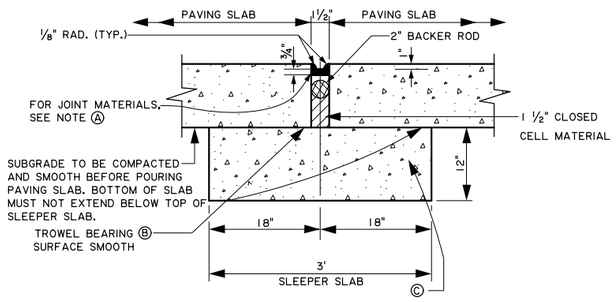

SECTION A-A
TYPE EJ-1½"

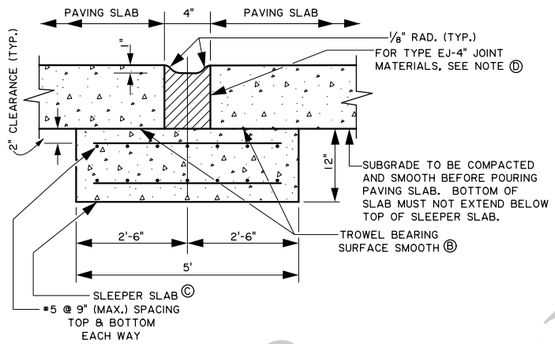

SECTION C-C
TYPE EJ-4" JOINT
AND SLEEPER SLAB

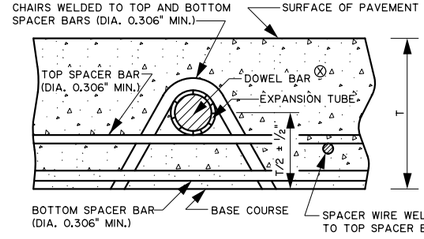

SECTION E-E
Ⓧ SEE TABLE I (SHEET 1 OF 3)

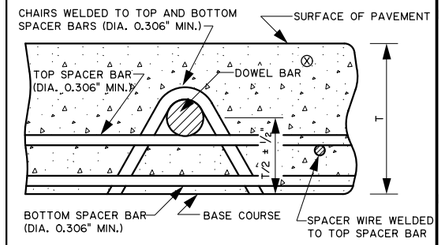

SECTION F-F
Ⓧ SEE TABLE I (SHEET 1 OF 3)

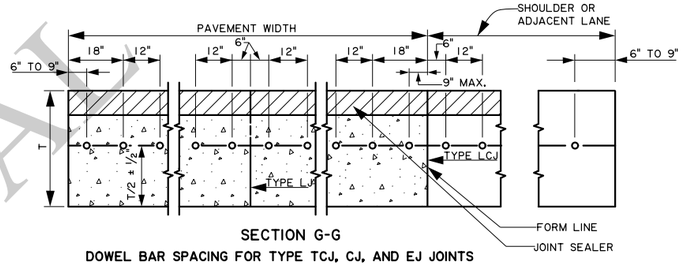

SECTION G-G
DOWEL BAR SPACING FOR TYPE TCJ, CJ, AND EJ JOINTS

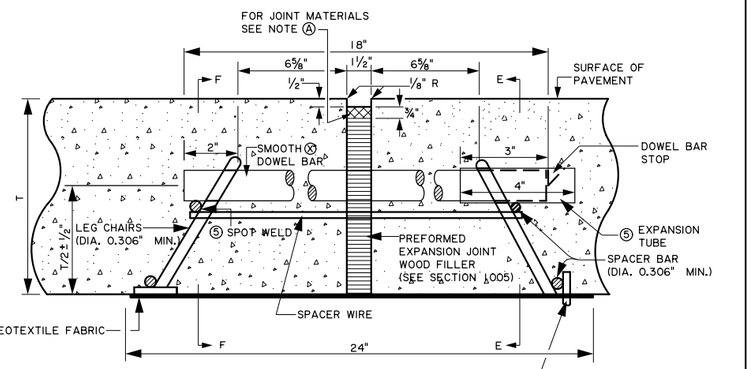

TYPE EJ ALTERNATE Ⓑ
(TRANSVERSE EXPANSION JOINT)
(NOT ALLOWED FOR DESIGN SPEED > 45 MPH)
Ⓧ SEE TABLE I (SHEET 1 OF 3)

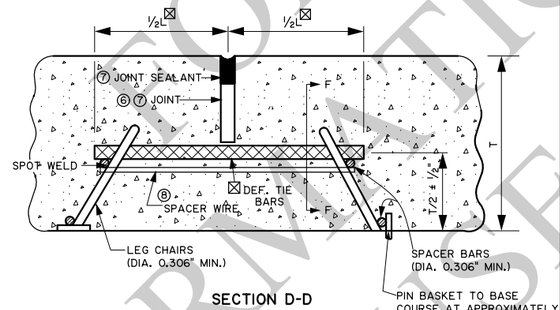

SECTION D-D
TYPE LJ (WITHOUT KEYWAY)
(LONGITUDINAL JOINT)
(REQUIRED WHEN PAVEMENT WIDTH EXCEEDS 15') (SEE NOTE Ⓒ)
☒ SEE TABLE I (SHEET 1 OF 3)

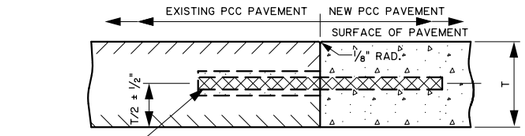

SECTION H-H
TYPE LBJ
(LONGITUDINAL BUTT JOINT)
☒ DEFORMED TIE BARS OF THE SIZE, LENGTH AND ONE HALF THE SPACING SPECIFIED IN TABLE I SHALL BE USED. THE BARS SHALL BE INSTALLED IN EXISTING PAVEMENT BY DRILLING HOLES ⅛" LARGER THAN THE BAR DIAMETER TO A REQUIRED DEPTH OF ½ THE BAR LENGTH. THE HOLES SHALL BE DRILLED AND FILLED IN ACCORDANCE WITH SECTION 601 BEFORE INSERTION OF THE TIE BARS.

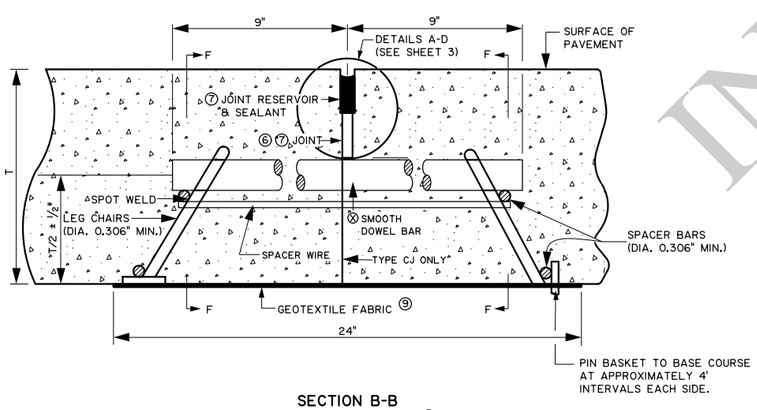

SECTION B-B
TYPE TCJ OR CJ Ⓑ
(TRANSVERSE CONTRACTION JOINT OR CONSTRUCTION JOINT)
Ⓧ SEE TABLE I (SHEET 1 OF 3)

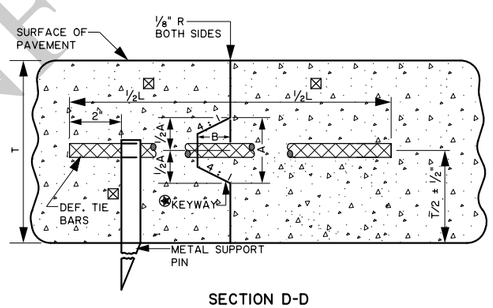

SECTION D-D
TYPE LCJ (WITH KEYWAY)
(LONGITUDINAL CONSTRUCTION JOINT)

❀ FOR KEYWAY DIMENSIONS A & B SEE TABLE I. IN LIEU OF THE KEYWAY, ONE OF THE FOLLOWING OPTIONS WILL BE ALLOWED:
A. INSTALL TIE BARS OF THE SIZE SHOWN IN TABLE I, AT ½ THE SPACING.
B. INSTALL TIE BARS ¼" LARGER THAN THE TIE BAR DIAMETER SHOWN SHOWN IN TABLE I, AT THE SAME SPACING.

☒ SEE TABLE I (SHEET 1 OF 3)

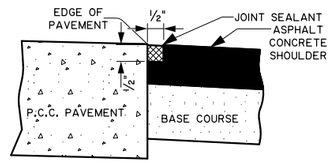

SECTION I-I
TYPE PJ
(HOT POURED SEALANT SECTION 1005)

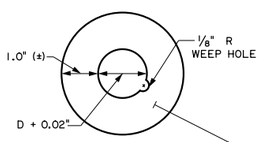

GROUT RETENTION DISK
D = DOWEL DIAMETER
(INCLUDING PROTECTIVE COATING)

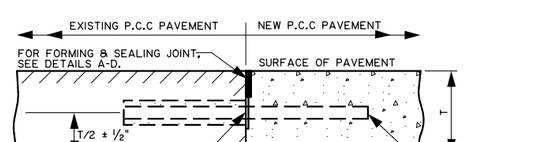

SECTION J-J
TYPE BJ
(TRANSVERSE BUTT JOINT)
Ⓧ SMOOTH DOWEL BARS OF THE SIZE, LENGTH AND SPACING SPECIFIED IN TABLE I SHALL BE USED. THE BARS SHALL BE INSTALLED IN EXISTING PAVEMENT BY DRILLING HOLES ⅛" LARGER THAN THE BAR DIAMETER TO A REQUIRED DEPTH OF ½ THE BAR LENGTH. THE HOLES SHALL BE DRILLED AND FILLED IN ACCORDANCE WITH SECTION 601 BEFORE INSERTION OF THE DOWEL BARS.

NOT TO SCALE

FOR INFORMATIONAL USE

SHEET NUMBER		
PARISH	CONTROL SECTION	STATE PROJECT
DESIGN T. LAM	DETAIL T. LAM	REVIEW SERIES # 2 OF 3
CHECK D. SMITH	CHECK D. SMITH	

APPROVED BY CHIEF ENGINEER: DATE: 6/1/2026

NO.	DATE	REVISION OR CHANGE ORDER DESCRIPTION	BY

PORTLAND CEMENT CONCRETE PAVEMENT DETAILS

CP-01

DOTD LOUISIANA DEPARTMENT OF TRANSPORTATION & DEVELOPMENT

STANDARD PLAN

NOTE: SEE STANDARD PLAN DW-01 AND PLANS FOR CURB PLACEMENT DETAILS.

DETAILS "A-F"

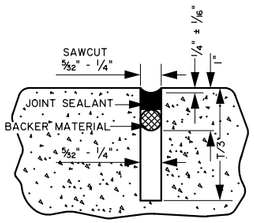

DETAIL "A"

USE THIS DETAIL IN CONJUNCTION WITH TYPE TCJ (SECTION B-B) AND TYPE LJ JOINT (SECTION D-D) AND NOTES ⑥ & ⑦ ON SHEET #1.

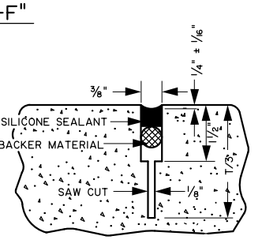

DETAIL "B"

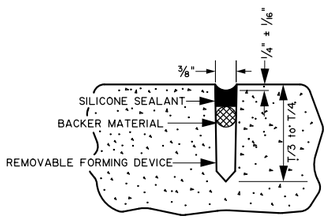

DETAIL "C"

NOT ALLOWED FOR DESIGN SPEEDS GREATER THAN 45 MPH.

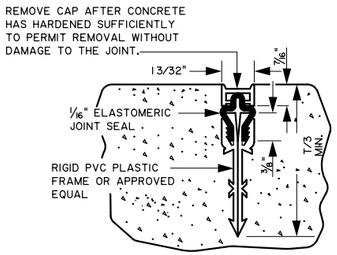

DETAIL "D"

NOT ALLOWED WHEN THE PAVEMENT IS PLACED ON PERMEABLE BASES

NOT ALLOWED FOR DESIGN SPEEDS GREATER THAN 45 MPH.

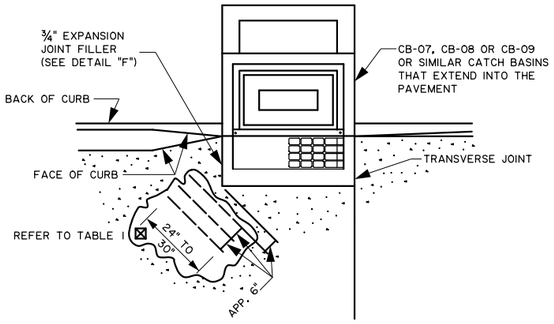

DETAIL "E"

TRANSVERSE JOINT AT CATCH BASIN

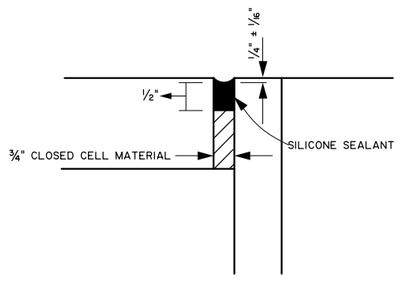

DETAIL "F"

AFTER CATCH BASIN TOP IS POURED, THE TOP OF THE 3/4 " JOINT FILLER IS TO BE REMOVED TO THE DEPTH SHOWN PRIOR TO SEALING. THE CURB FACES ADJACENT TO THE BASIN SHALL ALSO BE SEALED. JOINT FACES SHALL BE CLEANED IN ACCORDANCE WITH SECTION 601.

NOTE:

WHEN CURB IS POURED MONOLITHICALLY WITH PAVEMENT, THE BITUMINOUS PREFORMED EXPANSION JOINT FILLER SHALL EXTEND TO THE TOP OF JOINT INSERT. WHEN TRANSVERSE JOINTS ARE CONSTRUCTED BY SAWING, THE INITIAL SAW CUT SHALL EXTEND THRU THE CURBED SECTION (CURB AND UNDER-LYING PAVEMENT). THE SUBSEQUENT WIDENING CUT FOR THE JOINT SEALANT RESERVOIR SHALL EXTEND INTO THE CURB FOR A DISTANCE NECESSARY TO ENSURE THE SPECIFIED RESERVOIR DEPTH IS BEING MAINTAINED AT THE GUTTER LINE. ALL CURB FACES REGARDLESS OF CURB TYPE SHALL BE SEALED WHEN TRANSVERSE JOINT IS SAWED THROUGH CURB.

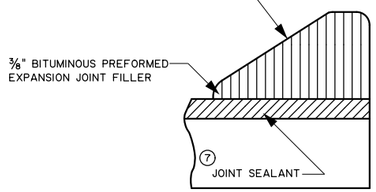

JOINT FILLER DETAIL FOR INTEGRAL CONCRETE CURB (MOUNTABLE OR BARRIER TYPE)

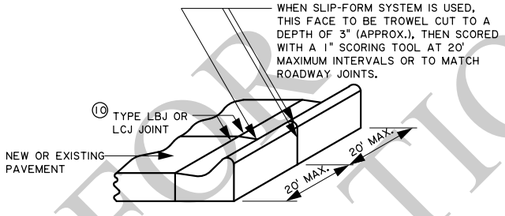

DETAIL SHOWING JOINTS IN CONCRETE CURB AND GUTTER (EXTEND ALL TCJ THROUGH CURB & GUTTER)

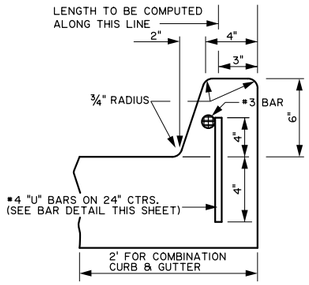

(BARRIER TYPE)

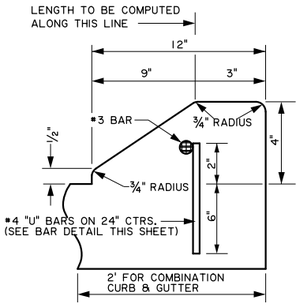

(MOUNTABLE TYPE)

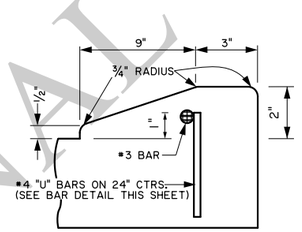

MODIFIED BARRIER OR MOUNTABLE CURB THRU DRIVEWAY

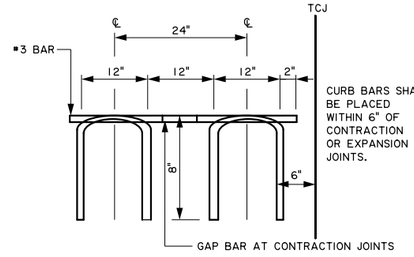

BAR DETAIL

SHOWING DIMENSIONS AND SPACING OF #4 "U" BARS AND LONGITUDINAL BARS FOR CONC. CURB

CURB DETAILS

NOTES:

- POUR CURB INTEGRAL WITH PCC PAVEMENT OR GUTTER TO INSURE MONOLITHIC CONSTRUCTION UNLESS OTHERWISE APPROVED BY THE ENGINEER. CURB BARS ARE NOT REQUIRED WHERE CURB IS CONSTRUCTED MONOLITHIC WITH THE PAVEMENT.
- ALL BARS SHOWN SHALL BE DEFORMED REINFORCING STEEL.
- WHEN REPLACING OR ADDING CONCRETE CURB TO EXISTING PAVEMENT, CONNECT THE NEW CONCRETE CURB TO THE PAVEMENT WITH THE DEFORMED REINFORCING STEEL SHOWN BY DRILLING HOLES INTO THE EXISTING PAVEMENT 1/8" LARGER THAN THE BAR DIAMETER. ANCHOR THE BARS WITH AN APPROVED EPOXY RESIN SYSTEM FROM THE DOTD AML. APPLY EPOXY ADHESIVE, COMPLYING WITH AASHTO M235, TYPE V, TO THE SURFACE AREA WHERE THE CONCRETE CURB WILL BE PLACED. INCLUDE ALL COST RELATED TO THE CONSTRUCTION OF THE CURB, INCLUDING THE DRILLED HOLES, DEFORMED REINFORCING BARS, AND EPOXY, IN THE UNIT PRICE FOR THE CURB ITEM.

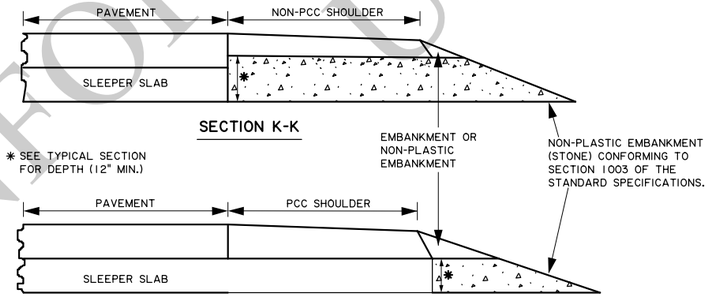

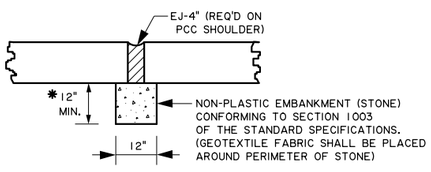

A BASE DRAIN OUTLET WILL BE REQUIRED AT E.J.-4" JOINTS UNLESS A SHOULDER UNDER DRAIN SYSTEM IS SPECIFIED ON THE PLANS, IN WHICH CASE, THE SHOULDER UNDER DRAIN FOR THE E.J. JOINT SHALL BE CONNECTED TO THE NEAREST STORM SEWER OR DISCHARGED THROUGH A HEADWALL. THE COST FOR THE BASE DRAIN OUTLET FOR THE E.J. JOINT IS TO BE INCLUDED IN THE COST OF THE PAVEMENT.

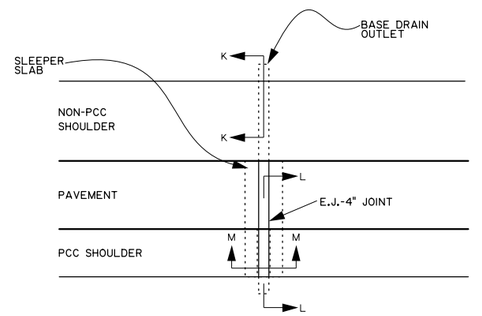

PLAN - BASE DRAIN OUTLET AT 4" E.J. EJ-4" JOINTS

DETAIL "G" - EJ-4" BASE DRAIN OUTLET

NOT TO SCALE

FOR INFORMATIONAL USE

SHEET NUMBER

PARISH	CONTROL SECTION	STATE PROJECT

DESIGN	CHECK	DETAIL	CHECK	REVIEW	SERIES #
T. LAM	D. SMITH	T. LAM	D. SMITH		3 OF 3

APPROVED BY CHIEF ENGINEER: DATE: 6/1/2026

NO.	DATE	REVISION OR CHANGE ORDER DESCRIPTION	BY

STATE OF LOUISIANA

PORTLAND CEMENT CONCRETE PAVEMENT DETAILS

CP-01

DOTD LOUISIANA DEPARTMENT OF TRANSPORTATION & DEVELOPMENT

STANDARD PLAN

13:12
8/26/2025

CLEANING AND RESEALING EXISTING TRANSVERSE AND LONGITUDINAL JOINTS

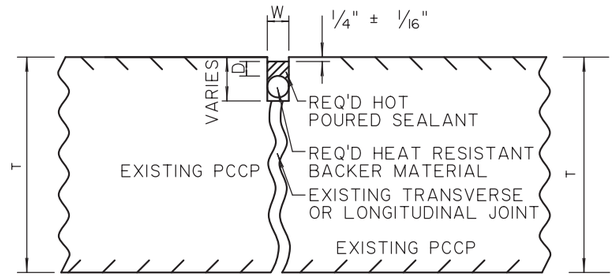

SECTION VIEW

TRANSVERSE JOINTS

WIDTH (W)	DEPTH (D)	BACKER MATERIAL (DIAMETER)	MINIMUM DEPTH TO REMOVE INCOMPRESSIBLES
1/2" - 1"	1/2"	W + 25%	T/2
1" - 1 1/2"	W/2	W + 25%	T

LONGITUDINAL JOINTS

WIDTH (W)	DEPTH (D)	BACKER MATERIAL (DIAMETER)	MINIMUM DEPTH TO REMOVE INCOMPRESSIBLES
3/8" - 1"	1/2"	W + 25%	T/2
1" - 1 1/2"	W/2	W + 25%	T

NOTES:
1. HOT POURED SEALANT SHALL CONFORM TO SECTION 602.3.030 OF THE STANDARD SPECIFICATIONS.
2. BACKER MATERIAL SHALL CONSIST OF HEAT RESISTANT, CLOSED-CELL, CROSS-LINKED POLYETHYLENE OR POLYOLEFIN FOAM.
3. ALL WORK ON THIS DETAIL TO BE PAID FOR UNDER ITEM LABELED: CLEANING AND RESEALING EXISTING TRANSVERSE PAVEMENT JOINTS, OR CLEANING AND RESEALING EXISTING LONGITUDINAL PAVEMENT JOINTS.
4. DETAIL NOT TO SCALE.

LONGITUDINAL SHOULDER JOINTS

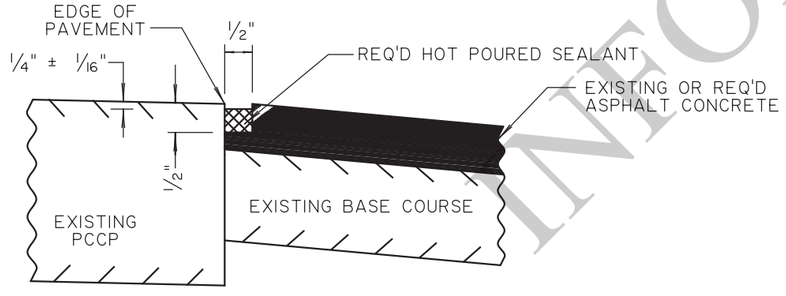

SECTION VIEW

NOTES:
1. HOT POURED SEALANT SHALL CONFORM TO SECTION 602.3.030 OF THE STANDARD SPECIFICATIONS.
2. ALL WORK ON THIS DETAIL TO BE PAID FOR UNDER THE ITEM LABELED: LONGITUDINAL SHOULDER JOINTS.
3. DETAIL NOT TO SCALE.

CLEANING AND SEALING RANDOM CRACKS

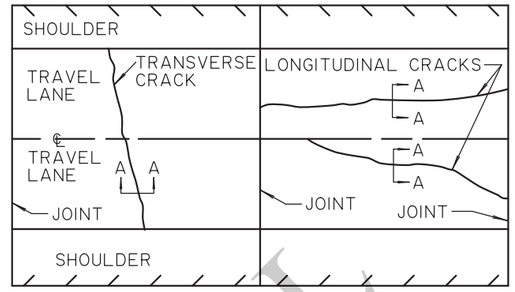

PLAN VIEW

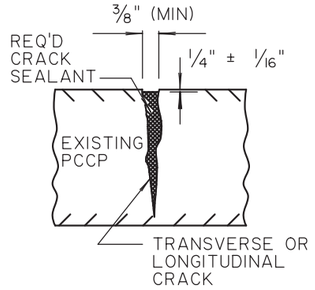

SECTION A-A

NOTES:
1. APPLIES TO RANDOM CRACKS GREATER THAN 3/8" IN WIDTH ON JOINTED PCCP.
2. CRACK SEALING LIMITS SHALL BE AS DIRECTED BY THE PROJECT ENGINEER.
3. SEALANT FOR TRANSVERSE AND LONGITUDINAL CRACKS SHALL CONFORM TO 602.3.040 OF THE STANDARD SPECIFICATIONS.
4. ALL WORK ON THIS DETAIL TO BE PAID FOR UNDER ITEM LABELED: CLEANING AND SEALING RANDOM CRACKS.
5. DETAIL NOT TO SCALE.

SAWING AND SEALING JOINTS IN ASPHALT CONCRETE OVERLAY

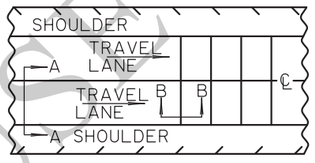

PLAN VIEW

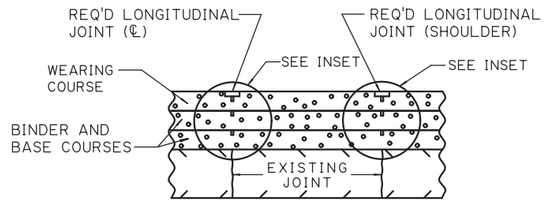

SECTION A-A

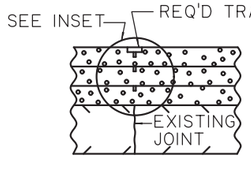

SECTION B-B

RESERVOIR DIMENSIONS

SLAB LENGTH	W
50' OR LESS	1/2"
51' OR GREATER	5/8"

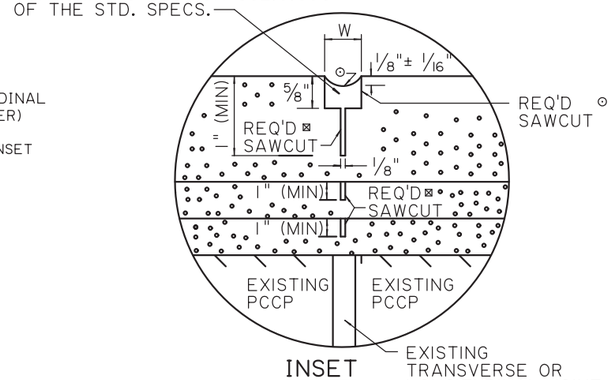

INSET

NOTES:
1. SAWCUTS IN ASPHALT CONCRETE LIFTS (⊠) TO BE PAID FOR UNDER ITEM LABELED: SAWCUTS IN ASPHALT CONCRETE LIFTS.
2. SAWING AND SEALING JOINTS IN ASPHALT CONCRETE OVERLAY (⊙) TO BE PAID FOR UNDER ITEMS LABELED: SAWING AND SEALING LONGITUDINAL JOINTS IN ASPHALT CONCRETE OVERLAY, OR SAWING AND SEALING TRANSVERSE JOINTS IN ASPHALT CONCRETE OVERLAY.
3. DETAIL NOT TO SCALE.

FOR INFORMATIONAL USE

SHEET NUMBER

PARISH | CONTROL SECTION | STATE PROJECT

DESIGN: B. MAY | DETAIL: B. MAY | REVIEW: SERIES # 1 OF 1
CHECK: R. ISEMANN | CHECK: R. ISEMANN

APPROVED BY CHIEF ENGINEER: DATE: Oct. 1, 2025

NO. | DATE | REVISION OR CHANGE ORDER DESCRIPTION | BY

STATE OF LOUISIANA

CONCRETE JOINTS AND CRACKS REHAB

CPR-01

DOTD LOUISIANA DEPARTMENT OF TRANSPORTATION & DEVELOPMENT

STANDARD PLAN

U:\Tasks\Spec updating\Finals\8.25.2025\CPR-01.dgn

13:12
8/26/2025

PATCHING CRCP

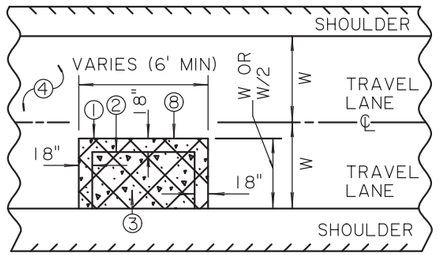

PLAN VIEW

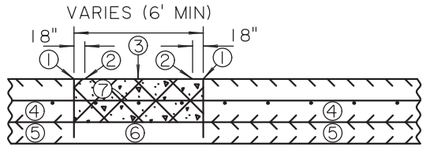

SECTION VIEW

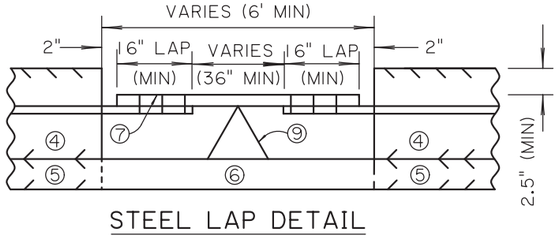

STEEL LAP DETAIL

LEGEND

① PARTIAL DEPTH SAW CUT (1 ½" MINIMUM DEPTH).
② FULL DEPTH SAW CUT.
③ CONTINUOUSLY REINFORCED CONCRETE PAVEMENT TO BE REMOVED AND REPLACED.
④ EXISTING CONTINUOUSLY REINFORCED CONCRETE PAVEMENT TO REMAIN.
⑤ EXISTING BASE COURSE TO REMAIN.
⑥ DETERIORATED BASE COURSE TO BE REMOVED AND REPLACED WITH CONCRETE WITHIN PATCHING LIMITS.
⑦ LONGITUDINAL AND TRANSVERSE STEEL TO BE REPLACED WITH THE SAME SIZE AND GRADE AS EXISTING STEEL.
⑧ CONCRETE IN THE SPLICE SECTION SHALL BE REMOVED IN SUCH A MANNER THAT THE EXISTING STEEL IS NOT DAMAGED OR BENT IN ANY DIRECTION.
⑨ THE MAXIMUM SPACING OF SUPPORTING CHAIRS SHALL BE 48".

NOTES:
1. TRANSVERSE SAWCUTS SHALL BE ALLOWED ACROSS ONLY ONE LANE AT A TIME.
2. THE DESIRED CLEARANCE BETWEEN THE PARTIAL DEPTH SAW CUT AND THE NEAREST TRANSVERSE CRACK IS 18". A SHORTER DISTANCE MAY BE USED, BUT NOT LESS THAN 6".
2. ALL WORK ON THIS DETAIL TO BE PAID FOR UNDER ITEM LABELED: PATCHING CONTINUOUSLY REINFORCED CONCRETE PAVEMENT.
3. DETAIL NOT TO SCALE.

PATCHING CRCP WITH HMAC

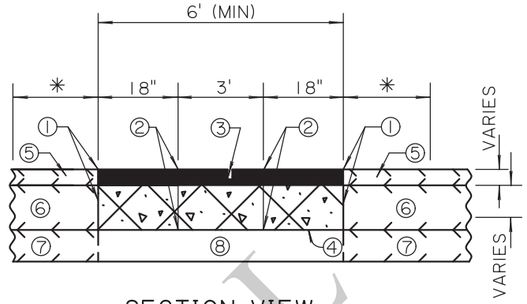

SECTION VIEW

✳ AN 18" CLEARANCE BETWEEN THE PARTIAL DEPTH SAW CUT AND THE NEAREST TRANSVERSE CRACK IS DESIRED. A SHORTER DISTANCE MAY BE USED, BUT THE MINIMUM LENGTH MUST NOT BE LESS THAN 6".

LEGEND

① FULL DEPTH SAW CUT THROUGH EXISTING ASPHALT CONCRETE WITH PARTIAL DEPTH SAW CUT THROUGH CRCP (1 ½" to 2").
② FULL DEPTH SAW CUT THROUGH EXISTING ASPHALT CONCRETE AND CRCP.
③ EXISTING ASPHALT CONCRETE TO BE REMOVED AND REPLACED. (COURSES AND TYPES TO BE AS SHOWN ON THE TYPICAL SECTION).
④ CRCP TO BE REMOVED AND REPLACED (SEE PATCHING CRCP DETAILS).
⑤ EXISTING ASPHALT CONCRETE TO REMAIN.
⑥ EXISTING CRCP TO REMAIN.
⑦ EXISTING BASE COURSE TO REMAIN.
⑧ DETERIORATED BASE COURSE TO BE REMOVED AND REPLACED WITH CONCRETE WITHIN THE PATCHING LIMITS.

NOTES:
1. ALL WORK ON THIS DETAIL TO BE PAID FOR UNDER ITEM LABELED: PATCHING CONTINUOUSLY REINFORCED CONCRETE PAVEMENT.
2. DETAIL NOT TO SCALE.

PATCHING JOINTED PCCP

FULL WIDTH PANEL PATCH

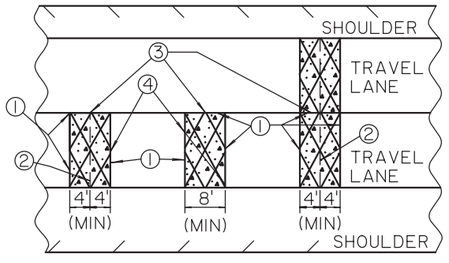

PLAN VIEW

LEGEND

① FULL DEPTH SAW CUT.
② REQUIRED AND EXISTING JOINT.
③ REQUIRED JOINT.
④ REQUIRED CONSTRUCTION JOINT.

NOTES:
1. FOR ALL PATCHES <10 FEET IN LENGTH, PLACE A BOND BREAKER IN THE LONGITUDINAL JOINT OF THE ADJACENT SLAB(S).
2. FOR PATCHES >10 FEET IN LENGTH THAT DO NOT CONTAIN A TRANSVERSE JOINT WITHIN THE PATCH, PLACE TIE BARS IN THE ADJACENT SLAB(S) ALONG THE LONGITUDINAL JOINT.
3. FOR PATCHES >10 FEET IN LENGTH WHERE A TRANSVERSE JOINT IS LOCATED WITHIN THE PATCH, PLACE TIE BARS IN THE ADJACENT SLAB(S) IN THE LONGER PORTION ALONG THE LONGITUDINAL JOINT (WITH RESPECT TO THE EXISTING TRANSVERSE JOINT) AND PLACE A BOND BREAKER IN THE REMAINING SHORTER PORTION OF THE LONGITUDINAL JOINT. FOR THOSE CASES WHERE THE PATCH IS EVENLY SPACED ACROSS THE TRANSVERSE JOINT, PLACE TIE BARS ALONG THE LONGITUDINAL JOINT ON THE LEADING SIDE EDGE OF THE ADJACENT SLAB(S) WITH RESPECT TO TRAFFIC.
4. REMOVE AND REPLACE DETERIORATED BASE COURSE WITH CONCRETE WITHIN THE PATCHING LIMITS. A BOND BREAKER IS REQUIRED BETWEEN THE BASE AND PAVEMENT.
5. THE RECOMMENDED MAXIMUM LENGTH-TO-WIDTH RATIO FOR ALL PCCP PATCHES IS 1.5 (L) TO 1 (W) BETWEEN JOINTS.
6. FOR TRANSVERSE BUTT JOINTS, USE 1" DIAMETER (#8) DOWEL BAR FOR SLAB THICKNESS 8" TO 10" AND 1.25" DIAMETER (#10) DOWEL BAR FOR SLAB THICKNESS >10" SPACED AT 12" CENTER TO CENTER. USE 18" LENGTHS FOR ALL TRANSVERSE BUTT JOINT DOWEL BARS. DRILL HOLES FOR DOWEL BARS INTO THE MIDDLE OF THE VERTICAL FACE OF EXISTING PAVEMENT. DRILL HOLES NO LARGER THAN ⅛" LARGER THAN THE DIAMETER OF THE BAR USED. FILL IN ACCORDANCE WITH SECTION 601 BEFORE INSERTION OF THE DOWEL BARS.
7. CONFORM TO SECTION 601 & CP-01 FOR JOINTS AND BAR SIZES, MATCHING EXISTING JOINT TYPE AND BAR SPACING WHERE POSSIBLE.
8. COAT EXISTING TRANSVERSE VERTICAL FACES WITH NEAT CEMENT JUST PRIOR TO POURING PATCH.
9. SAW AND SEAL ALL JOINTS.
10. PAYMENT FOR ALL WORK PERFORMED IN THIS DETAIL UNDER ITEM: FULL DEPTH PATCHING OF JOINTED CONCRETE PAVEMENT.
11. ANY DAMAGE OR SAWCUTS INTO ADJACENT PANELS SHALL BE PATCHED, AS SHOWN ON THIS PATCHING DETAIL, AT NO DIRECT PAY.
12. DETAIL NOT TO SCALE.

PATCHING JOINTED PCCP

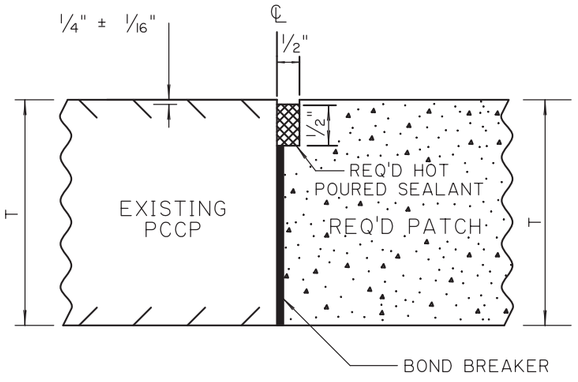

LONGITUDINAL JOINT SECTION VIEW (<10')

NOTES:
1. HOT POURED SEALANT SHALL CONFORM TO SECTION 602.3.030 OF THE STANDARD SPECIFICATIONS.
2. ALL WORK ON THIS DETAIL TO BE PAID FOR UNDER ITEM LABELED: FULL DEPTH PATCHING OF JOINTED CONCRETE PAVEMENT.
3. DETAIL NOT TO SCALE.

FOR INFORMATIONAL PURPOSES ONLY

SHEET NUMBER
PARISH
CONTROL SECTION
STATE PROJECT
DESIGN B. MAY
CHECK R. ISEMANN
DETAIL B. MAY
CHECK R. ISEMANN
REVIEW
SERIES # 1 OF 1
APPROVED BY CHIEF ENGINEER:
DATE: Oct. 1, 2025
NO. DATE REVISION OR CHANGE ORDER DESCRIPTION BY

PATCHING CRCP AND PCCP

CPR-02

DOTD LOUISIANA DEPARTMENT OF TRANSPORTATION & DEVELOPMENT

STANDARD PLAN

U:\Tasks\Spec updating\Finals\8.25.2025\CPR-02c.dgn

12/28/2020 10:09

GRINDING ISOLATED TRANSVERSE JOINTS

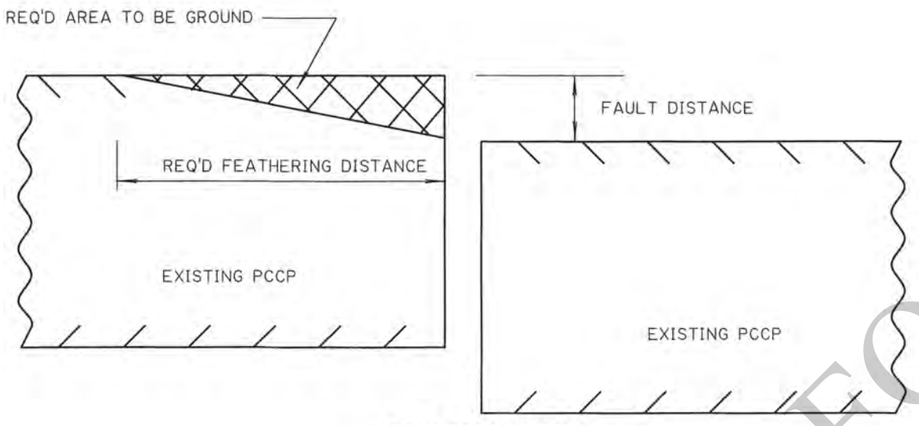

SECTION VIEW

FAULT DISTANCE	FEATHERING DISTANCE
1/4"	5'
3/8"	7.5'
1/2"	10'

NOTES:
1. IF FAULT IS OVER 1/2", REMOVE AND REPLACE THE FAULTED AREA WITH A FULL DEPTH PATCH.
2. ALL GRINDING TO BE DONE PRIOR TO JOINT SEALING.
3. ALL WORK ON THIS DETAIL TO BE PAID FOR UNDER ITEM: MILLING CONCRETE PAVEMENT.
4. DETAIL NOT TO SCALE.

PAVEMENT GROOVING

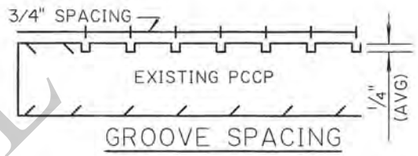

GROOVE SPACING

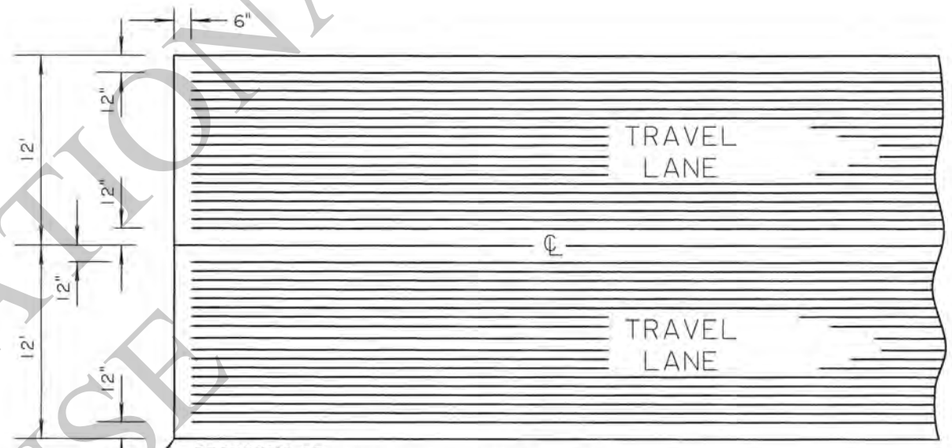

PLAN VIEW

SHOWING GROOVES FOR 2 LANES

NOTES:
1. ALL WORK ON THIS DETAIL SHALL BE PAID FOR UNDER ITEM: DIAMOND GROOVING CONCRETE PAVEMENT.
2. DETAIL NOT TO SCALE.

FOR INFORMATIONAL USE

SHEET NUMBER

PARISH | CONTROL SECTION | STATE PROJECT

DESIGN B. MAY | CHECK J. LACOMBE | DETAIL B. MAY | CHECK J. LACOMBE | REVIEW | SERIES # 1 OF 1

STATE OF LOUISIANA
BRIAN A. MAY
License No. 40505
PROFESSIONAL ENGINEER
IN
CIVIL ENGINEERING
12/28/20

APPROVED BY CHIEF ENGINEER: DATE: 1/12/2021

CONCRETE REHAB DETAILS

CPR-03

DOTD
LOUISIANA DEPARTMENT OF TRANSPORTATION & DEVELOPMENT

ROAD DESIGN

FINAL PLANS
4/6/2026 07:2
C:\Users\00372781\Desktop\Standard Plans\CPR-03.dgn

GRINDING ISOLATED TRANSVERSE JOINTS

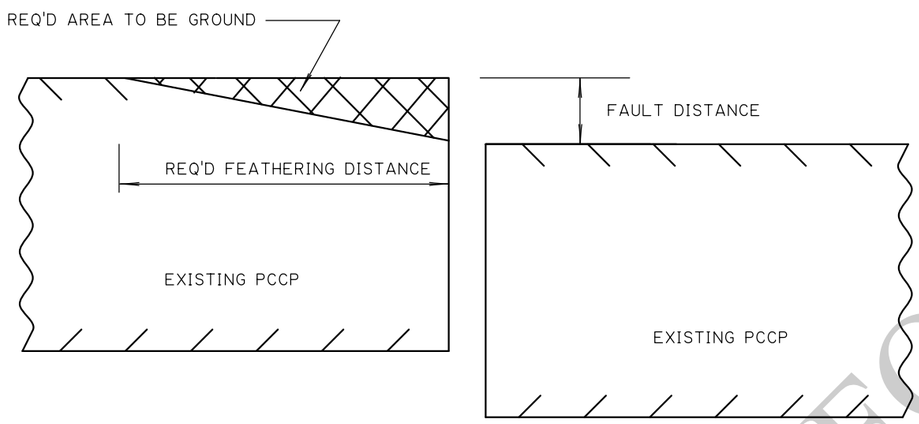

SECTION VIEW

FAULT DISTANCE	FEATHERING DISTANCE
1/4"	5'
3/8"	7.5'
1/2"	10'

NOTES:
1. IF FAULT IS OVER 1/2", REMOVE AND REPLACE THE FAULTED AREA WITH A FULL DEPTH PATCH.
2. ALL GRINDING TO BE DONE PRIOR TO JOINT SEALING.
3. ALL WORK ON THIS DETAIL TO BE PAID FOR UNDER ITEM: DIAMOND GRINDING CONCRETE PAVEMENT.
4. DETAIL NOT TO SCALE.

PAVEMENT GROOVING

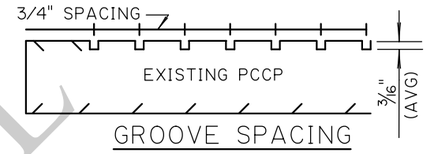

GROOVE SPACING

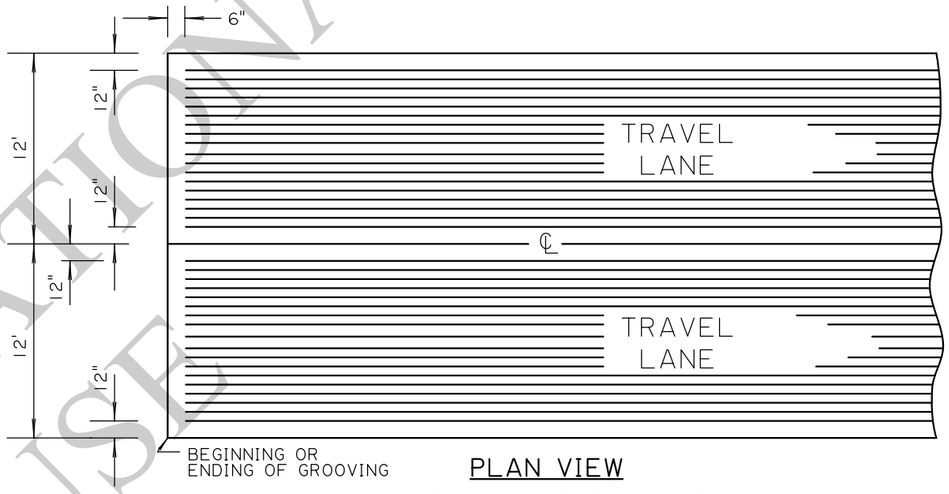

PLAN VIEW

SHOWING GROOVES FOR 2 LANES

NOTES:
1. ALL WORK ON THIS DETAIL SHALL BE PAID FOR UNDER ITEM: DIAMOND GROOVING CONCRETE PAVEMENT.
2. DETAIL NOT TO SCALE.

FOR INFORMATIONAL USE

SHEET NUMBER

PARISH	CONTROL SECTION	STATE PROJECT

DESIGN	B. MAY	REVIEW	SERIES # 1 OF 1
CHECK	R. ISEMANN		
DETAIL	A. BADAWI		
CHECK	B. MAY		

APPROVED BY CHIEF ENGINEER: DATE: 4/6/2026

NO.	DATE	REVISION OR CHANGE ORDER DESCRIPTION	BY

CONCRETE REHAB DETAILS

CPR-03

DOTD LOUISIANA DEPARTMENT OF TRANSPORTATION & DEVELOPMENT

STANDARD PLAN

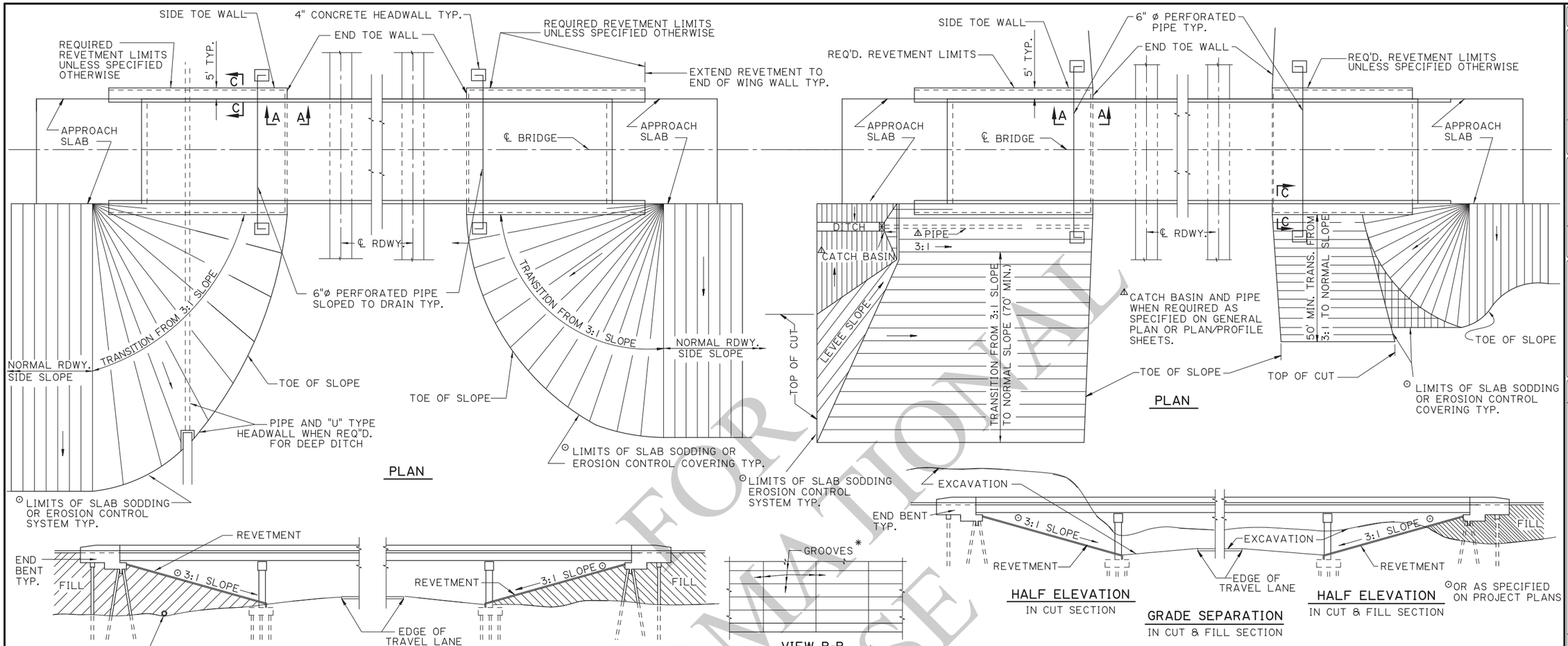

ALL DETAILS NTS

NOTES:

1. USE CLAS R CONCRETE FOR REVETMENT AND CLASS A1 CONCRETE FOR HEADWALL.
2. ⊡ AT THE CONTRACTOR'S OPTION, REVETMENT MAY BE SHOTCRETE 3" THICK REINFORCED WITH 6 X 6-W2.0 X W2.0 WELDED WIRE FABRIC AND GROOVED AS SPECIFIED IN VIEW B-B. THE CONTRACTOR SHALL BE REQUIRED TO SUBMIT HIS MIX DESIGN FOR APPROVAL TO THE DOTD DISTRICT LAB PRIOR TO BEGINNING WORK. SHOTCRETING SHALL CONFORM TO ALL REQUIREMENTS OF "SPECIFICATIONS FOR MATERIALS, PROPORTIONING, AND APPLICATION OF SHOTCRETE", ACI 506.2, LATEST EDITION. THE FINE AGGREGATE SHALL CONTAIN NOT LESS THAN 3 NOR MORE THAN 6 PERCENT MOISTURE BY WEIGHT.
3. GEOTEXTILE FABRIC SHALL BE CLASS C OR D IN ACCORDANCE WITH DOTD APPROVED MATERIALS LIST. 6 MIL THICK POLYETHYLENE SHEETING SHALL BE IN ACCORDANCE WITH THE SPECIFICATIONS.
4. ⊕ LIMITS OF BEDDING MATERIAL TO BE OUTER EDGES OF REVETMENT. BEDDING MATERIAL AS PER SECTION 726 AND TO BE UNIFORMLY COMPACTED AS DIRECTED BY THE PROJECT ENGINEER. GEOTEXTILE FABRIC TO BE INSTALLED BETWEEN EARTHFILL AND BEDDING MATERIAL. POLYETHYLENE SHEETING TO BE INSTALLED BETWEEN BEDDING MATERIAL AND REVETMENT.
5. SLAB SODDING WILL BE PAID FOR UNDER THE DESIGNATED SLAB SODDING PAY ITEM.
6. EROSION CONTROL SYSTEM WILL BE PAID FOR UNDER THE EROSION CONTROL SYSTEM DESIGNATED PAY ITEM.
7. HEADWALL WILL BE PAID FOR UNDER THE DESIGNATED CLASS A1 HEADWALL PAY ITEM. ESTIMATED QUANTITY IS BASED ON ACTUAL SLOPED AREA.
8. ALL OTHER WORK WILL BE PAID FOR UNDER THE DESIGNATED 4-INCH THICK CONCRETE CAST-IN-PLACE REVETMENT PAY ITEM. ESTIMATED QUANTITY IS ACTUAL SLOPED AREA.

FOR INFORMATIONAL USE

SHEET NUMBER

PARISH | CONTROL SECTION | STATE PROJECT

DESIGN P. FOSSIER | DETAIL A.LANCASTER
CHECK A. ALLEN | CHECK R. MORVANT
REVIEW | SERIES # | OF |

APPROVED BY CHIEF ENGINEER: DATE: 12/10/2025

NO. | DATE | BY | REVISION OR CHANGE ORDER DESCRIPTION

LOUISIANA DEPARTMENT OF TRANSPORTATION & DEVELOPMENT

STANDARD PLAN

CAST-IN-PLACE REVETMENT

CR-01

11/24/2025 15:0

IP_PWP:d1245748\cr-01.dgn

11:1
11/8/2025

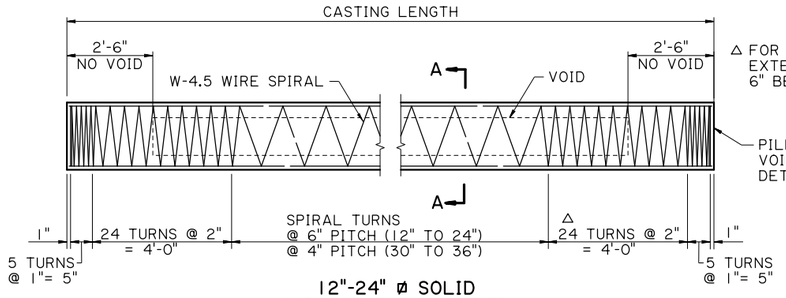

12"-24" ø SOLID
24", 30", 36" ø VOIDED
PRECAST-PRESTRESSED CONCRETE PILES
NTS

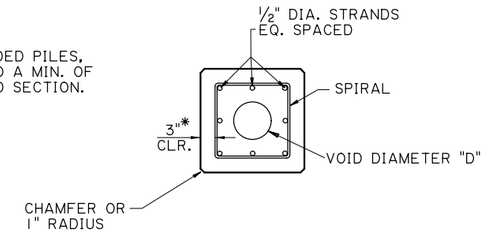

SECTION A-A

* 2" FOR 12" & 14" PILE SIZE.
CLEARANCES MEASURED AT CENTER LINE OF PILE.

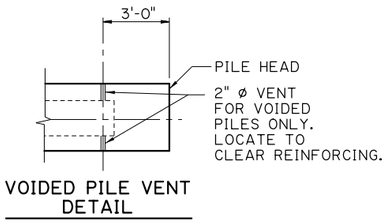

VOIDED PILE VENT DETAIL

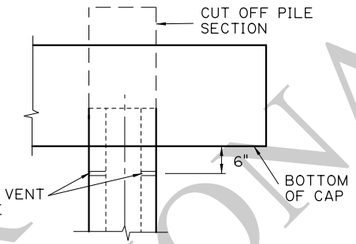

CUT OFF PILE HEAD DETAIL
(VOIDED PILES ONLY)

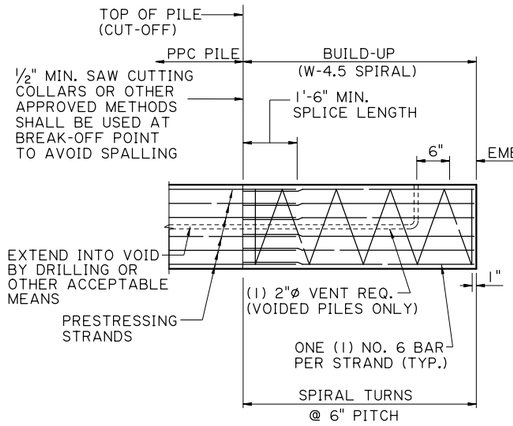

TYP. BUILD-UP WHERE REDRIVING IS NOT REQUIRED
(WHERE REDRIVING IS REQUIRED PILE BUILD-UP IS NOT ALLOWED)

ALL DETAILS NOT TO SCALE

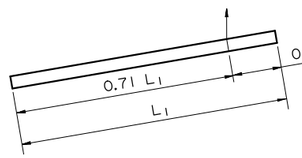

1-POINT PICK-UP

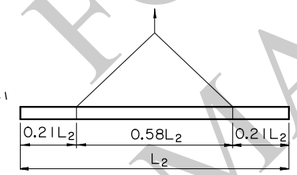

2-POINT PICK-UP

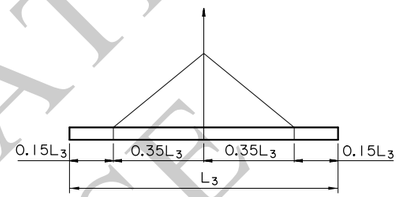

3-POINT PICK-UP

PICK-UP DETAILS

2 POINT PICK-UP SHALL TAKE PRECEDENCE OVER 3 POINT PICK-UP WHERE APPLICABLE.

PILE INFORMATION

PILE SIZE (in.)	SECTION PROPERTIES					SQUARE SPIRAL LAYOUTS					
	VOID "D" (in.)	AREA (in.²)	SECTION MODULUS (in.³)	WEIGHT PER FOOT (lb/ft)	CHAMFER (in.)	NO. OF STRANDS	PRESTRESS IN CONCRETE (psi)		MAX. CASTING LENGTH (ft)		
							AT RELEASE	AT 90 DAYS	L_1	L_2	L_3
12 SOLID	-	144	288	150	¾"	4	830	774	53.3	76.0	105.0
14 SOLID	-	196	457	204	¾"	8	1203	1116	66.0	93.4	130.4
16 SOLID	-	256	683	267	¾"	12	1373	1273	67.6	95.7	136.7
18 SOLID	-	324	972	338	¾"	12	1096	1026	72.0	102.7	142.5
20 SOLID	-	400	1333	417	1½"	16	1180	1106	78.4	111.3	154.6
24 SOLID	-	576	2304	600	1½"	24	1227	1154	86.7	122.7	172.0
24 VOIDED	10.5	489	2254	510	1½"	20	1204	1119	92.9	131.4	183.2
30 VOIDED	16.5	686	4257	715	1½"	28	1203	1120	107.8	152.6	212.5
36 VOIDED	22.5	898	7077	936	1½"	36	1182	1102	120.6	170.9	237.9

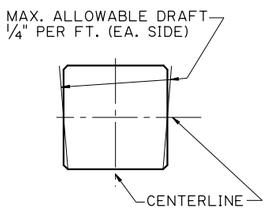

DRAFT DETAIL

GENERAL NOTES

DESIGN SPECIFICATIONS: AASHTO LRFD BRIDGE DESIGN SPECIFICATIONS, 6th EDITION 2012, WITH 2013 INTERIMS.

CONCRETE IN PILE: THE CONTRACTOR SHALL DESIGN AND SUBMIT FOR APPROVAL A "P1" CONCRETE MIX WITH A MINIMUM COMPRESSIVE CYLINDER STRENGTH OF 6000 PSI AT 28 DAYS. CONCRETE STRENGTH AT THE TIME OF TRANSFER OF PRESTRESSED FORCE SHALL BE 4500 PSI OR GREATER.

CONCRETE IN BUILD-UP: BUILD-UP CONCRETE SHALL MEET OR EXCEED THE CONCRETE DESIGN REQUIREMENTS OF THE ORIGINAL PILE. BUILT UP CONCRETE NOT MEETING THE ABOVE REQUIREMENTS SHALL BE REMOVED AND REPLACED AT NO DIRECT PAY.

PRESTRESSING STEEL: PRETENSIONED REINFORCEMENT SHALL BE ½" DIA. SEVEN-WIRE, UNCOATED LOW-RELAXATION STRANDS GRADE 270 AND SHALL CONFORM TO THE REQUIREMENTS OF AASHTO M203. AN INITIAL TENSION OF 30,980 LBS. SHALL BE APPLIED TO EACH STRAND.

DEFORMED REINFORCING STEEL: REINFORCING STEEL SHALL BE DEFORMED STEEL BARS, GRADE 60 AND SHALL MEET THE REQUIREMENTS OF AASHTO M31.

SPIRAL REINFORCING STEEL: SPIRAL REINFORCEMENT SHALL BE SIZE W-4.5 COLD-DRAWN STEEL WIRE AND SHALL CONFORM TO AASHTO M 32M.

FABRICATION: MANUFACTURE OF THE PILING AND FABRICATION TOLERANCES SHALL BE IN ACCORDANCE WITH THE "MANUAL FOR QUALITY CONTROL FOR PLANTS AND PRODUCTION OF STRUCTURAL PRECAST CONCRETE PRODUCTS (MNL-116, LATEST EDITION) PUBLISHED BY PCI, AND THE DRAFT DETAIL SHOWN BELOW.

CHAMFERS AND CORNERS: ON PILES 18" ø OR SMALLER, ALL EXPOSED CONCRETE CORNERS ARE TO HAVE ¾" CHAMFERS. ON PILES 20" ø OR LARGER, ALL EXPOSED CONCRETE CORNERS ARE TO HAVE 1½" CHAMFERS. A 1" RADIUS CURVE WILL BE PERMITTED IN LIEU OF CHAMFERS SHOWN ABOVE. HOWEVER, ALL PILES FURNISHED SHALL BE OF THE SAME CONFIGURATION.

PICK-UP AND HANDLING: LOADING CRITERIA ARE BASED ON CAREFUL HANDLING OF THE PILE. ROTATION OF THE PILE IN THE SLING SHALL BE PREVENTED UNTIL THE PILE IS IN VERTICAL POSITION.

PICK-UP POINTS FOR ALL THE PILES SHALL BE CLEARLY MARKED ON PILES. SUPPORT FOR STORAGE SHALL BE AT PICK-UP POINTS. IN THE CASE OF 1-POINT PICK-UP, SUPPORT PILE AT $0.29L_1$ FROM EACH END.

PILES SHALL BE MADE AT A CENTRAL PLANT AND BE TRANSPORTED TO THE BRIDGE SITE. BEFORE TRANSPORTATION, ALL PRESTRESSED PILING SHALL BE HELD AT THE PLANT FOR 14 DAYS AFTER CASTING AND SHALL ATTAIN A MINIMUM COMPRESSIVE STRENGTH OF 6000 PSI.

PICK-UP POINTS SHOWN MAY BE MODIFIED FOR TRANSPORTATION PURPOSES, PROVIDED THE PILE STRESSES ARE IN ACCORDANCE WITH THE DESIGN CRITERIA. ANY SUPPORT CONFIGURATION DIFFERING FROM THOSE SHOWN ON THIS PLAN SHALL REQUIRE STAMPED AND SIGNED CALCULATIONS TO BE SENT TO THE BRIDGE DESIGN ENGINEER FOR REVIEW.

PILES REQUIRING THREE PICK-UP POINTS AND TRUCK TRANSPORTATION SHALL REQUIRE PIVOTING SPREADER BEAMS THAT PROVIDE FOUR POINTS OF SUPPORT TO THE PILE, RESULTING IN PILE STRESSES WITHIN DESIGN CRITERIA. THE TRUCK TRANSPORT SUPPORT POINTS SHALL BE SENT TO THE BRIDGE DESIGN ENGINEER FOR REVIEW.

ALL EMBEDDED LIFTING LOOPS SHALL BE PROVIDED WITH 2" DEEP FOAM BLOCK-OUTS. PRIOR TO TRANSPORT, LIFTING LOOPS SHALL BE REMOVED TO PROVIDE 2" MINIMUM CLEAR COVER. THE REMAINING CAVITIES SHALL BE CLEAR OF ALL SLAG AND LOOSE MATERIAL, AND THEN FILLED WITH A PATCHING MATERIAL FROM QPL NO. 49. THE PATCHING MATERIAL MUST MEET OR EXCEED PILE CONCRETE REQUIREMENTS FOR STRENGTH AND PERMEABILITY.

VENT HOLES: FOR VOIDED PILES THAT REQUIRE BUILD-UP OR CUT-OFF, THE VENT HOLES SHALL BE RE-ESTABLISHED AT 6" BELOW THE BOTTOM OF THE BENT CAP, AS SHOWN IN THE "CUT OFF" AND "BUILD-UP" PILE DETAILS ON THIS PLAN.

SHOP DRAWINGS: ANY DEVIATION FROM THE DETAILS SHOWN ON THIS SHEET, OR ANY DESIGN CHANGES MADE TO THE PILES SHALL REQUIRE SHOP DRAWINGS TO BE SUBMITTED TO THE BRIDGE DESIGN ENGINEER FOR REVIEW AND APPROVAL PRIOR TO FABRICATION.

ALLOWABLE HANDLING STRESSES: THE MAXIMUM LENGTHS FOR PICK-UP HAVE BEEN DETERMINED USING THE FOLLOWING AASHTO LRFD STRESSES FOR BOTH 14 AND 90 DAYS.

CONTROL OF CRACKS IN CONCRETE: VOIDS SHALL TERMINATE NOT LESS THAN 12 INCHES BEYOND THE LONGEST PILE SPLICE REBAR EXTENSION.

MOMENT CONNECTIONS: WHENEVER METAL PIPE IS USED TO FORM A MOMENT CONNECTION THE SPIRAL SPACING (2") SHALL EXTEND THE FULL LENGTH OF AND AT LEAST 18 INCHES BEYOND THE END OF THE PILE.

ALLOWABLE TENSILE STRESS (ksi): $0.19\sqrt{f'_c}$
ALLOWABLE COMPRESSIVE STRESS (ksi): $0.45f'_c$
IMPACT FACTOR: 1.5
MIN. FINAL COMPRESSIVE STRESS: 0.7 ksi

FOR INFORMATIONAL USE

SHEET NUMBER

PARISH	CONTROL SECTION	STATE PROJECT

DESIGN	A.LANCASTER	DETAIL	A. WILLIAMS	REVIEW	K. KEMP
CHECK	K. KEMP	CHECK	WEI PENG	SERIES #	1 OF 1

APPROVED BY CHIEF ENGINEER: DATE: 11/26/2025

NO.	DATE	REVISION OR CHANGE ORDER DESCRIPTION	BY

PRE-CAST PRESTRESSED CONCRETE PILES

PPC PILES CS-216

DOTD LOUISIANA DEPARTMENT OF TRANSPORTATION & DEVELOPMENT

STANDARD PLAN

IP_PWP:d1244951\BD.2.5.1.0.01 CS-216.dgn

14:22
1/6/2026

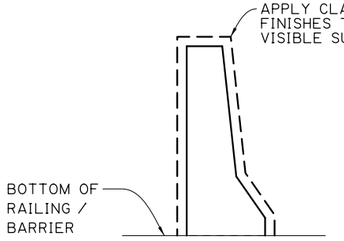

DETAIL 1
NTS

NOTE:
VISIBLE CONCRETE PORTIONS OF HANDRAILING SHALL BE FINISHED WITH A CLASS 2 & CLASS 3 SURFACE FINISH. SEE PLANS FOR DETAILS WHEN THESE COMPONENTS ARE REQUIRED.

BRIDGE RAILING / PERMANENT ROADWAY BARRIER / PIER PROTECTION

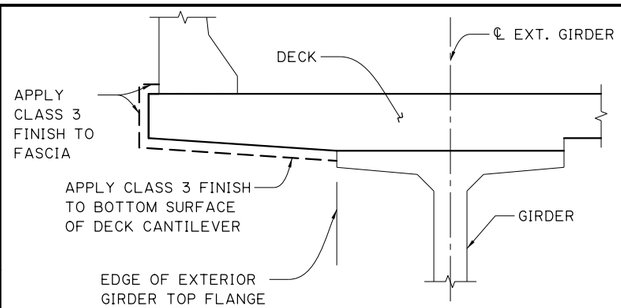

DECK

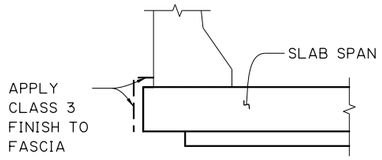

SLAB

DETAIL 2
NTS

DECK / SLAB

NOTES:

1. DETAILS SHOWN ARE TYPICAL AND FOR ILLUSTRATIVE PURPOSES ONLY. ACTUAL SURFACE SHAPES MAY VARY. REFER TO PROJECT PLANS FOR REQUIRED LOCATION OF SURFACE FINISHES.
2. THE TERM "VISIBLE" USED HEREIN IS TAKEN TO MEAN VISIBLE AFTER CONSTRUCTION IS COMPLETE, FINISHED GROUND LINES ARE IN PLACE, AND WITH RESPECT TO THE WATER SURFACE ELEVATION AT THE TIME OF APPLICATION.

⊗ 3. EXTEND CLASS 3 FINISH TO 1'-0" BELOW FINISHED GROUND LINE.

△ 4. THE "SURFACE FINISH WATER ELEVATION" ▽ IS THE WATER SURFACE ELEVATION AT THE TIME OF CONCRETE SURFACE FINISH APPLICATION. EXTEND SURFACE FINISH TO THIS ELEVATION.

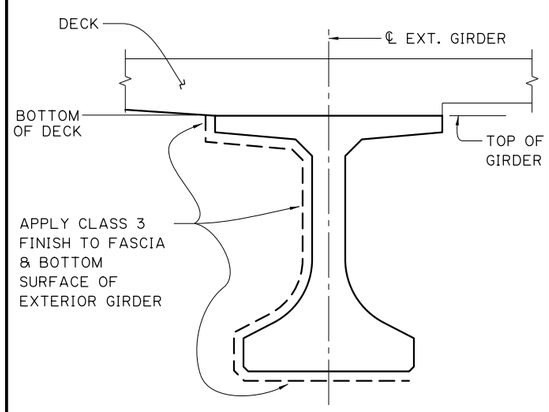

DETAIL 3
NTS

NOTE:
GIRDER TYPE VARIES. LG GIRDER SHOWN FOR ILLUSTRATION PURPOSE ONLY.

EXTERIOR CONCRETE GIRDER

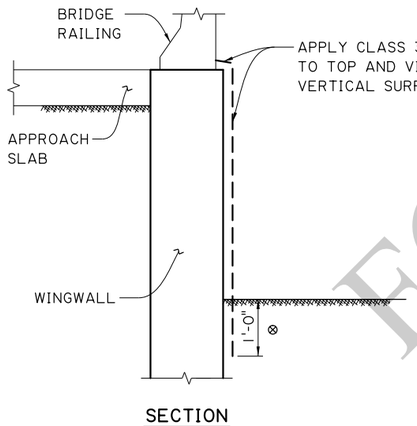

SECTION
WINGWALL PARALLEL TO ROADWAY

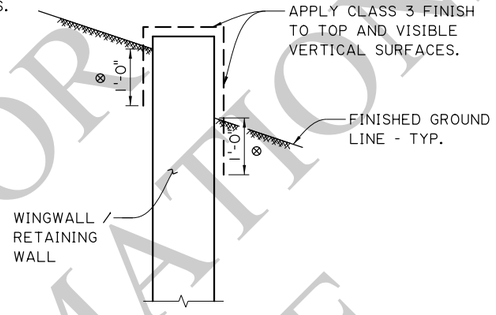

SECTION
WINGWALL PERPENDICULAR TO ROADWAY OR CAST-IN-PLACE RETAINING WALL

DETAIL 4
NTS

WINGWALL & CAST-IN-PLACE RETAINING WALL

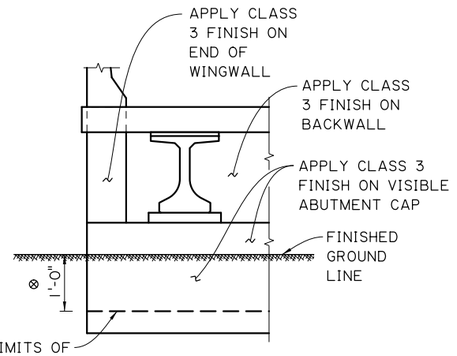

DETAIL 5
NTS

BACKWALL & ABUTMENT CAP

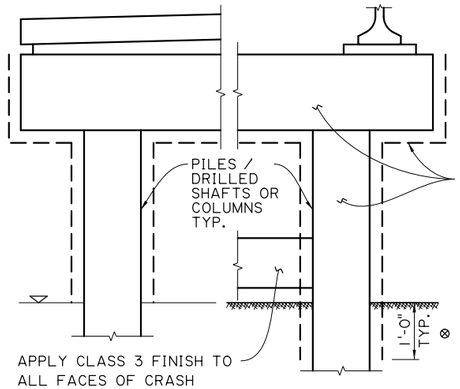

HALF SECTION
SLAB SPAN BRIDGE

HALF SECTION
GIRDER BRIDGE

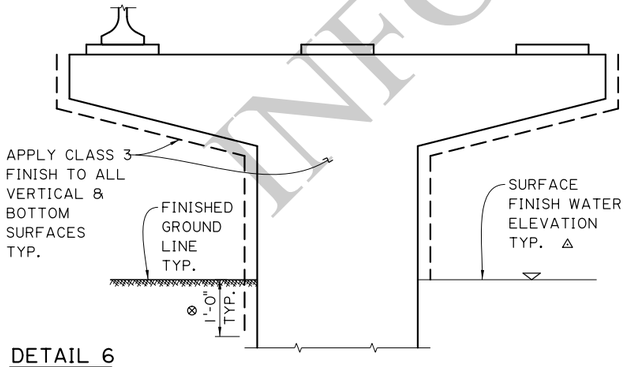

DETAIL 6
NTS

SECTION
HAMMERHEAD BENT

COLUMN BENT, PILE BENT, & HAMMERHEAD BENT

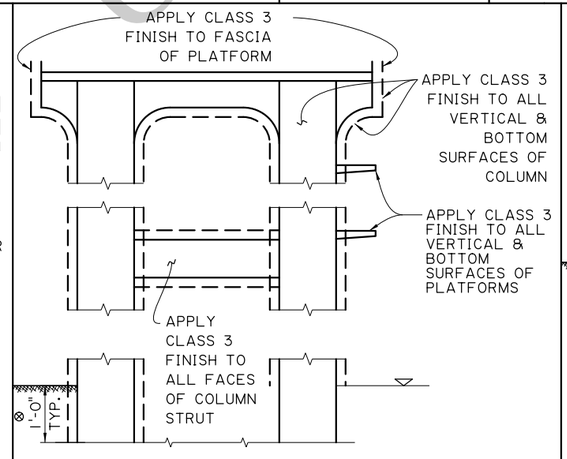

DETAIL 7
NTS

CONCRETE TOWER

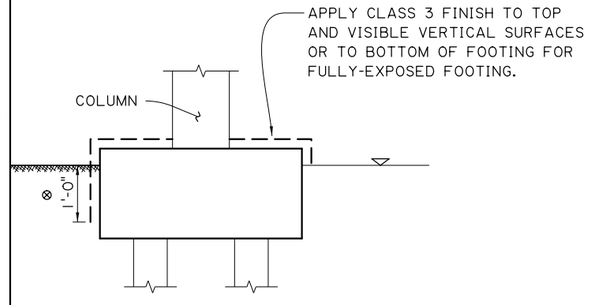

DETAIL 8
NTS

EXPOSED FOOTING

FOR INFORMATIONAL USE

SHEET NUMBER

PARISH | CONTROL SECTION | STATE PROJECT

DESIGN A.LANCASTER | DETAIL A. WILLIAMS | REVIEW K. KEMP
CHECK K. KEMP | CHECK WEI PENG | SERIES # | OF |

APPROVED BY CHIEF ENGINEER: DATE: 1/06/2026

NO.	DATE	REVISION OR CHANGE ORDER DESCRIPTION	BY

CONCRETE SURFACE FINISH CLASS 2 & CLASS 3

CSF-01

DOTD LOUISIANA DEPARTMENT OF TRANSPORTATION & DEVELOPMENT

STANDARD PLAN

IP_PWP:d1243945/CSF-01.dgn

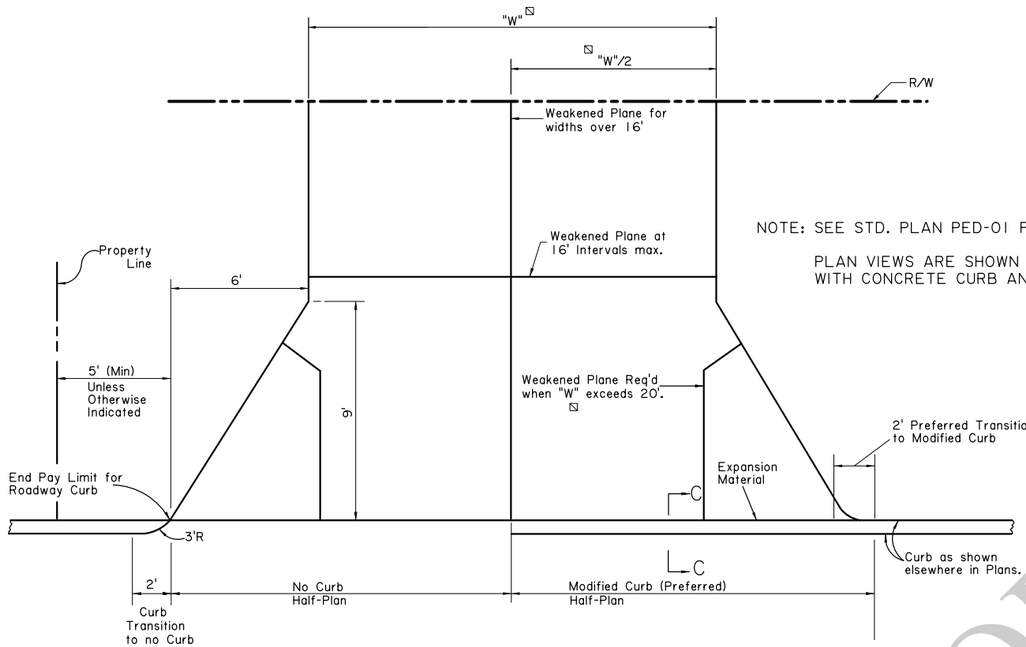

NOTE: SEE STD. PLAN PED-01 FOR TREATMENT OF SIDEWALKS AT DRIVEWAYS.

PLAN VIEWS ARE SHOWN FOR PCC DRIVES. ASPHALT CONCRETE DRIVES WITH CONCRETE CURB AND GUTTER ARE SIMILAR.

PLAN OF RESIDENTIAL DRIVEWAY

NOTE: MODIFIED CURB TO BE PAID FOR AS CURB AND WILL BE USED AS SHOWN IN THE PLANS OR WHEN DIRECTED BY THE PROJECT ENGINEER.

RADII TRANSITION SHAPE MAY BE USED IN LIEU OF A FLARE.

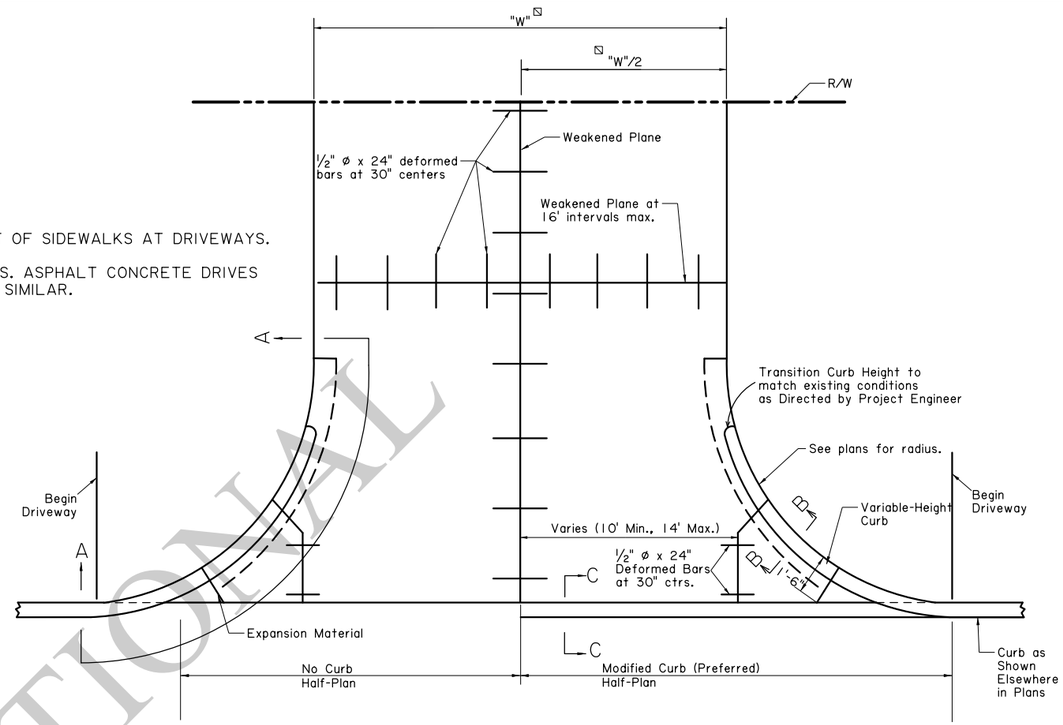

PLAN OF COMMERCIAL DRIVEWAY

NOTE: MODIFIED CURB TO BE PAID FOR AS CURB AND WILL BE USED AS SHOWN IN THE PLANS OR WHEN DIRECTED BY THE PROJECT ENGINEER.

WHEN CURB IS REQUIRED ALONG RADII OF DRIVEWAY, PAYMENT FOR TOE WALL AND CURB WILL BE INCLUDED IN THE PRICE FOR DRIVEWAY ITEMS.

WHEN CURB IS NOT REQUIRED ALONG RADII, TRANSITION CURB AS SHOWN ON RESIDENTIAL DRIVEWAY.

⊠ "W" = Width as per plans

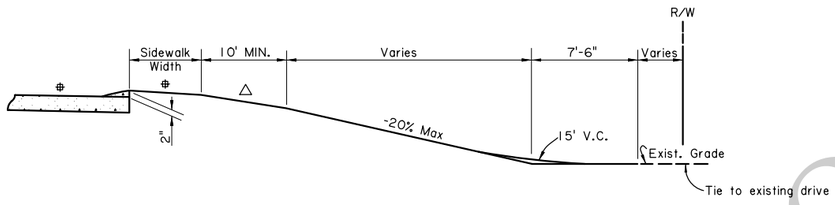

TYPICAL DRIVEWAY IN FILL

NOTES:

1. DRIVEWAY PROFILES SHOWN ASSUME A SIDEWALK ADJACENT TO THE CURB.

△ 2. MAXIMUM DRIVEWAY GRADE SHALL BE 20% (25% FOR SPECIAL CASES). MAXIMUM BREAK IN GRADE WITHOUT A VERTICAL CURVE SHALL BE 10% FOR CRESTS AND 9% FOR SAGS, AT NOT LESS THAN 10' INTERVALS.

3. ROADWAY AND SIDEWALK SLOPES VARY AS PER PLANS.

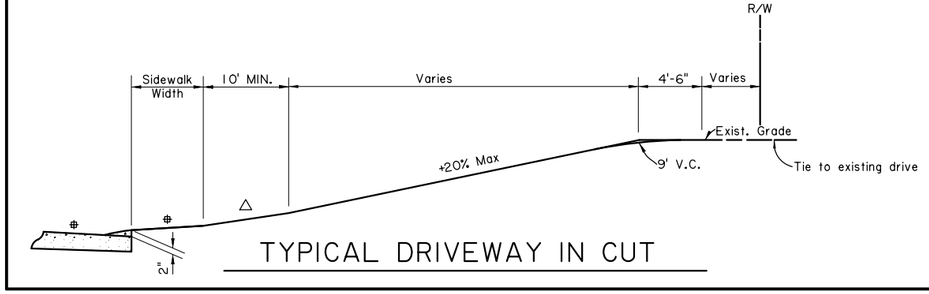

TYPICAL DRIVEWAY IN CUT

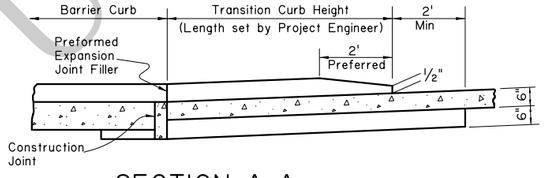

SECTION A-A

(Weakened Plane not shown.)

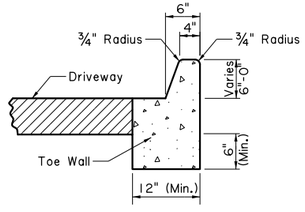

SECTION B-B

NOTE: For PCC Driveway, Curb, Toe Wall & Driveway to be poured monolithically.

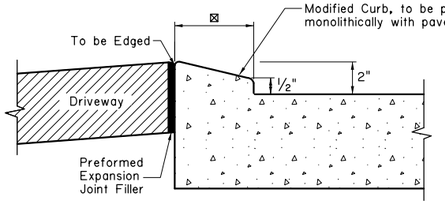

⊠ 6" to match Barrier Curb
12" to match Mountable Curb

SECTION C-C

NOTE: See Std. Plan CP-01 for Curb construction

FOR INFORMATIONAL USE

SHEET NUMBER

PARISH | CONTROL SECTION | STATE PROJECT

DESIGN P. TONEY | CHECK R. MCMILLAN | DETAIL P. TONEY | CHECK R. MCMILLAN | REVIEW D. SMITH | SERIES # 1 OF 3

APPROVED BY CHIEF ENGINEER: DATE: 6/1/2026

NO. | DATE | REVISION OR CHANGE ORDER DESCRIPTION | BY

STATE OF LOUISIANA DEPARTMENT OF TRANSPORTATION AND DEVELOPMENT

DRIVEWAYS ON CURBED ROADWAYS

DW-01

DOTD LOUISIANA DEPARTMENT OF TRANSPORTATION & DEVELOPMENT

STANDARD PLAN

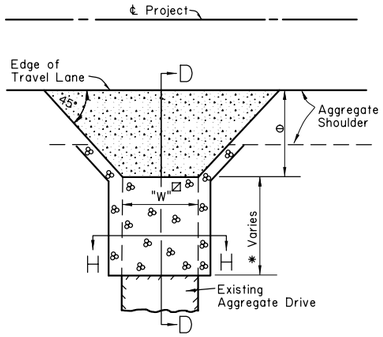

TYPE "A"

Paved Driveway Flare
Along Aggregate Shoulder

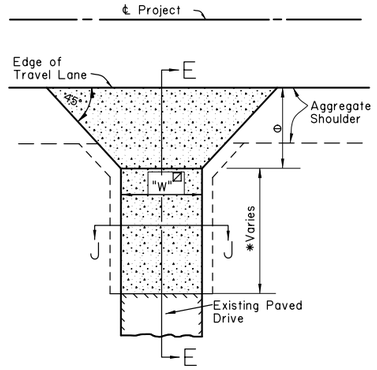

TYPE "B"

Paved Driveway Flare
Along Aggregate Shoulder
Connecting Existing Paved Drive

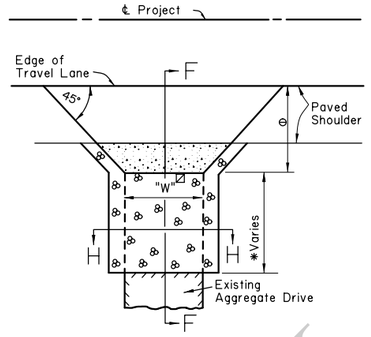

TYPE "C"

Paved Driveway Flare
Along Paved Shoulder

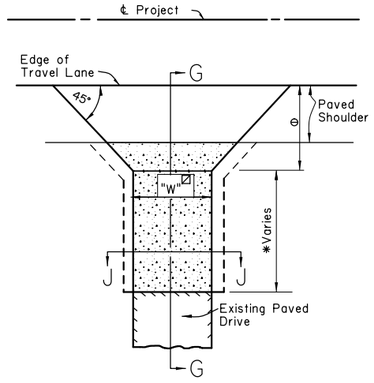

TYPE "D"

Paved Driveway Flare
Along Paved Shoulder
Connecting Existing Paved Drive

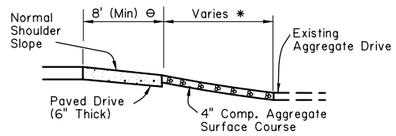

SECTION D-D

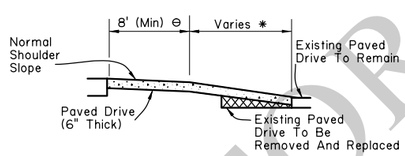

SECTION E-E

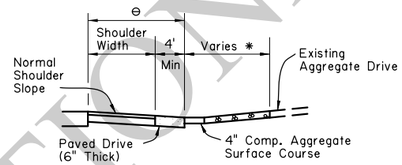

SECTION F-F

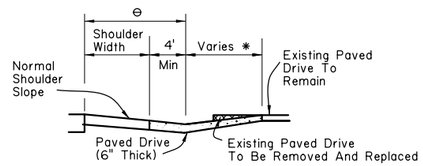

SECTION G-G

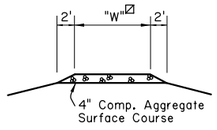

SECTION H-H

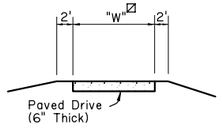

SECTION J-J

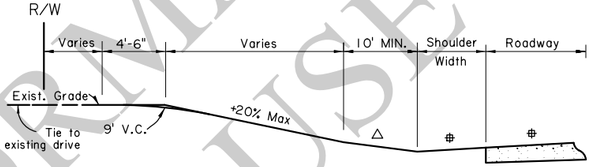

TYPICAL DRIVEWAY IN CUT

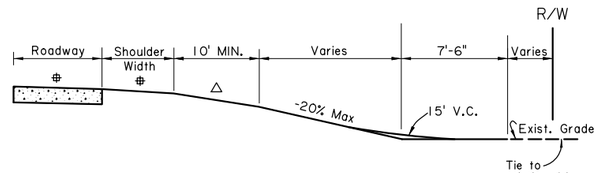

TYPICAL DRIVEWAY IN FILL

☑ "W" = Width as per plans

NOTES:

1. PORTLAND CEMENT CONCRETE DRIVES WILL BE CONSTRUCTED TO REPLACE OR CONNECT TO EXISTING CONCRETE DRIVES.

* 2. SEE PLANS: APPLIES WHERE EXISTING DRIVE IS TO BE REMOVED FOR ROADWAY CONSTRUCTION AND/OR TO ACHIEVE VERTICAL GEOMETRY REQUIREMENTS.

⊖ 3. PAVEMENT SHALL EXTEND 8' MINIMUM FROM EDGE OF PAVED ROADWAY SURFACE (TRAVEL LANE) FOR SINGLE-FAMILY RESIDENTIAL/NON-COMMERCIAL AGRICULTURE TYPE CONNECTIONS, AND 25' FOR TRAFFIC GENERATOR (COMMERCIAL) TYPE CONNECTIONS, OR AS PER THE PLANS. PAVED DRIVEWAY FLARE SHALL EXTEND 4' MINIMUM FROM EDGE OF PAVED SHOULDER. RADII TRANSITION SHAPE MAY BE USED IN LIEU OF FLARE.

4. COMPACTION OF SUBGRADE AND GRADING WORK FOR CONSTRUCTION OF DRIVES SHALL BE SATISFACTORY TO THE ENGINEER AND PAYMENT SHALL BE INCLUDED IN THE DRIVEWAY ITEMS.

△ 5. MAXIMUM DRIVEWAY GRADE SHALL BE 20% (25% FOR SPECIAL CASES). MAXIMUM BREAK IN GRADE WITHOUT A VERTICAL CURVE SHALL BE 10% FOR CRESTS AND 9% FOR SAGS, AT NOT LESS THAN 10' INTERVALS.

⌖ 6. ROADWAY AND SHOULDER SLOPES VARY AS PER PLANS

LEGEND

ASPHALT

AGGREGATE

REMOVAL

FOR INFORMATIONAL USE

SHEET NUMBER

PARISH	CONTROL SECTION	STATE PROJECT

DESIGN	P. TONEY
CHECK	R. MCMILLAN
DETAIL	P. TONEY
CHECK	R. MCMILLAN
REVIEW	D. SMITH
SERIES #	2 OF 3

APPROVED BY CHIEF ENGINEER:

DATE: 6/1/2024

NO.	DATE	REVISION OR CHANGE ORDER DESCRIPTION	BY

STATE OF LOUISIANA
DEPARTMENT OF TRANSPORTATION AND DEVELOPMENT

DRIVEWAYS ON NON-CURBED ROADWAYS

DW-01

DOTD
LOUISIANA DEPARTMENT OF TRANSPORTATION & DEVELOPMENT

STANDARD PLAN

TURNOUT TIE-IN DETAILS FOR OVERLAY PROJECTS

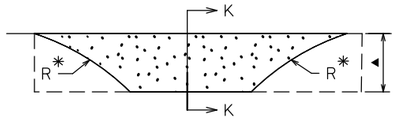

DETAIL OF APRON AT TURNOUT (TYPICAL)

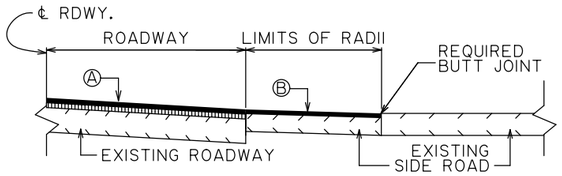

SECTION K-K (PAVED SIDE ROAD)

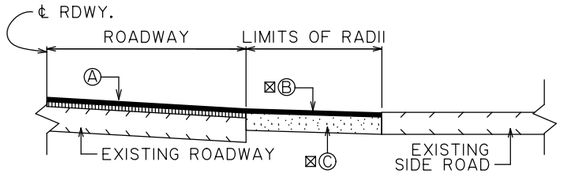

SECTION K-K (UNPAVED SIDE ROAD)

Ⓐ ASPHALT CONCRETE (COURSES AND TYPES SHOWN ON ROADWAY TYPICAL SECTION)

Ⓑ ASPHALT CONCRETE (THICKNESS SHALL MATCH ROADWAY WEARING SURFACE)

⊠Ⓒ ASPHALT CONCRETE BASE COURSE

* MATCH EXISTING RADIUS

▲ VERTICAL TRANSITION FROM ROADWAY TO BUTT JOINT TIE-IN WHERE NEEDED

⊠ TOTAL THICKNESS OF WEARING COURSE AND BASE COURSE SHALL BE A MINIMUM OF 6"

DRIVEWAY TIE-IN DETAILS FOR OVERLAY PROJECTS

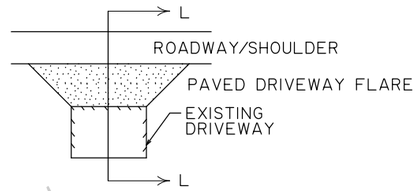

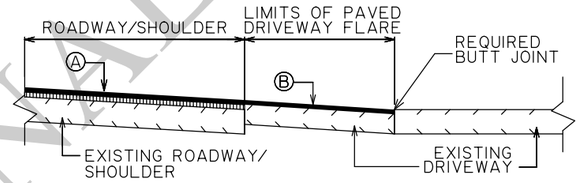

SECTION L-L (ALTERNATE 1)

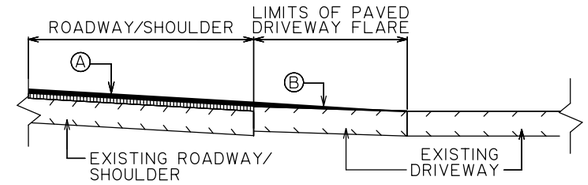

SECTION L-L (ALTERNATE 2)

Ⓐ ASPHALT CONCRETE (COURSES AND TYPES SHOWN ON ROADWAY TYPICAL SECTION)

Ⓑ ASPHALT CONCRETE (THICKNESS SHALL MATCH ROADWAY WEARING COURSE)

FOR INFORMATIONAL USE

NOTES:

1. DRIVE WIDTHS AND FLARE DIMENSIONS TO BE ADJUSTED TO MATCH EXISTING CONDITIONS AS DIRECTED BY THE PROJECT ENGINEER.
2. TYPE OF TIE-IN AND LENGTH OF OVERLAY TRANSITION TO BE SET BY PROJECT ENGINEER TO achieve A SUITABLE CONNECTION FOR EXISTING DRIVE.
3. REFER TO SHEET 2 OF DW-01 FOR SUGGESTED TIE-IN CRITERIA OF STEEP GRADES.

SHEET NUMBER

PARISH | CONTROL SECTION | STATE PROJECT

DESIGN P. TONEY | DETAIL P. TONEY | REVIEW D. SMITH | SERIES # 3 OF 3

CHECK R. MCMILLAN | CHECK R. MCMILLAN

APPROVED BY CHIEF ENGINEER: DATE: 6/1/2026

REVISION OR CHANGE ORDER DESCRIPTION | DATE | NO. | BY

STATE OF LOUISIANA — DEPARTMENT OF TRANSPORTATION AND DEVELOPMENT

TURNOUT AND DRIVEWAY TIE-IN DETAILS

DW-01

DOTD LOUISIANA DEPARTMENT OF TRANSPORTATION & DEVELOPMENT

STANDARD PLAN

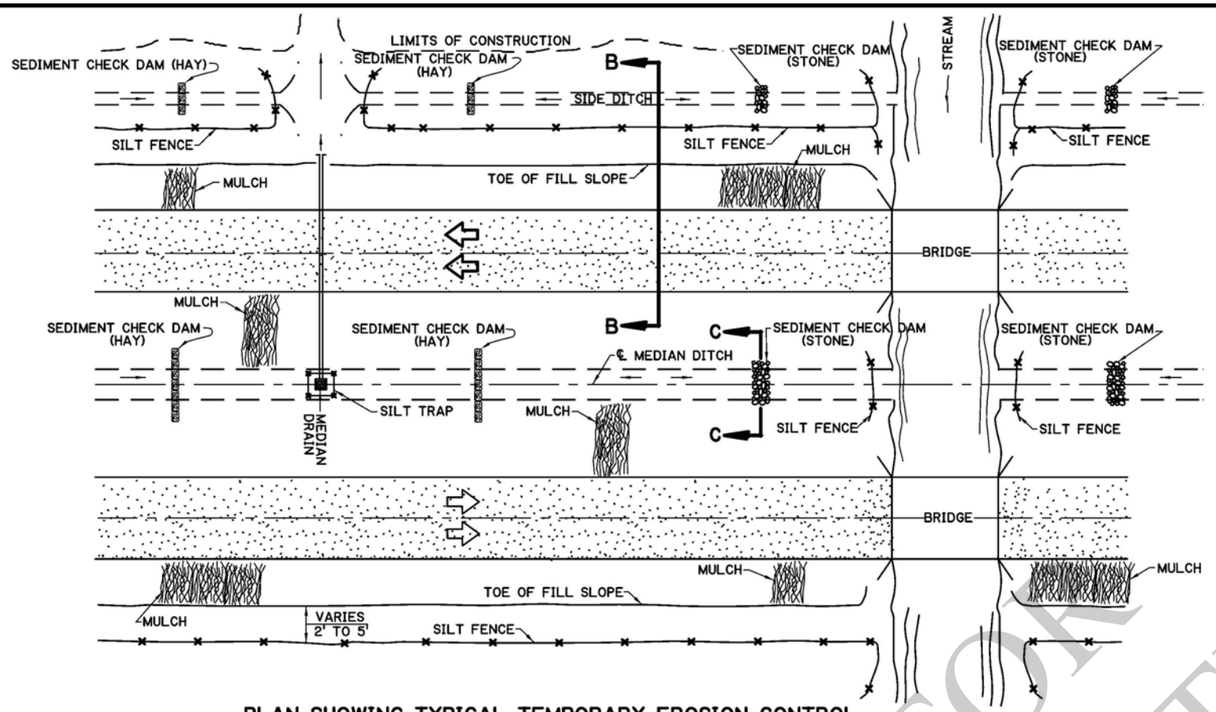

PLAN SHOWING TYPICAL TEMPORARY EROSION CONTROL

MULCHES

MULCHES ARE THE APPLICATION OF MATS OF MATERIAL PLACED ON THE SOIL SURFACE TO PREVENT EROSION BY PROTECTING THE SOIL SURFACE FROM RAINDROP IMPACT AND TO REDUCE THE VELOCITY OF OVERLAND FLOW. MULCHES CAN BE ORGANIC OR SYNTHETIC. MULCHES SHALL BE IN ACCORDANCE WITH PROJECT SPECIFICATIONS FOR TEMPORARY EROSION CONTROL. A FEW GUIDELINES FOR THE USE OF MULCHES ARE:

1. USE ON CUT AND EMBANKMENT SLOPES WHICH HAVE NOT BEEN COMPLETED TO PLAN GRADE OR WHERE THE WEATHER OR SOIL CONDITIONS WILL NOT PERMIT COMPLETING THEM WITHIN A REASONABLE TIME
2. USE ON CLEARED, GRUBBED , AND SCALPED AREAS WHERE SOIL EROSION IS LIKELY TO OCCUR
3. USE WITH TEMPORARY SEEDING

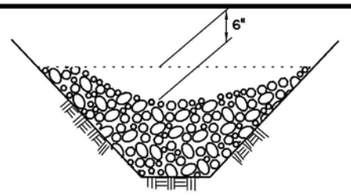

SECTION C-C

TEMPORARY SEDIMENT CHECK DAM (STONE)

PAY ITEM: TEMPORARY SEDIMENT CHECK DAM (STONE)

NOTES:
A STONE CHECK DAM IS A SMALL TEMPORARY DAM CONSTRUCTED ACROSS A SWALE OR DRAINAGE DITCH. THE PURPOSE OF THIS MEASURE IS TO REDUCE THE VELOCITY OF CONCENTRATED STORM WATER FLOWS, THEREBY REDUCING EROSION OF THE SWALE OR DITCH. THE STONE CHECK DAM WILL TRAP SMALL AMOUNTS OF SEDIMENTS GENERATED IN THE DITCH ITSELF, HOWEVER IT SHOULD NOT BE USED AS A SEDIMENT TRAPPING DEVICE. A FEW BASIC DESIGN GUIDELINES FOR THE USE OF STONE CHECK DAMS ARE:

1. USE IN SMALL OPEN CHANNELS WHICH DRAIN 10 ACRES OR LESS
2. DO NOT USE IN A LIVE STREAM
3. USE IN A TEMPORARY DITCH OR SWALE WHICH, BECAUSE OF THEIR SHORT LENGTH OF SERVICE, CANNOT RECEIVE A NON- ERODIBLE LINING
4. USE IN PERMANENT DITCHES OR SWALES WHICH WILL NOT RECEIVE A PERMANENT LINING FOR AN EXTENDED PERIOD OF TIME
5. USE IN TEMPORARY OR PERMANENT DITCHES OR SWALES WHICH NEED PROTECTION DURING THE ESTABLISHMENT OF GRASS LININGS
6. FOR STONE SPECIFICATIONS, SEE PROJECT SPECIFICATIONS FOR RIPRAP, (CLASS 2 LB)

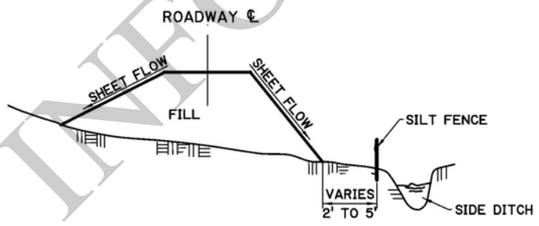

SECTION B-B

TEMPORARY SILT FENCE APPLICATION

(FOR CONSTRUCTION DETAILS AND SPECIFICATIONS SEE SHEET 2 OF 2.)

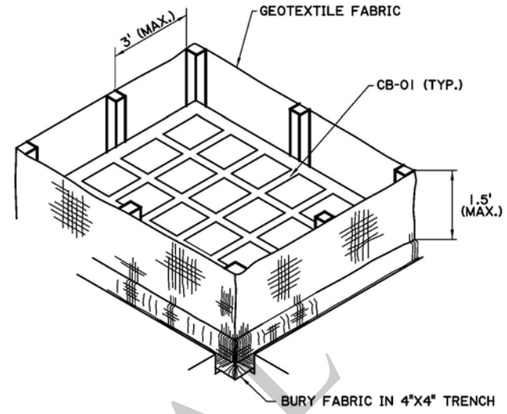

ISOMETRIC VIEW SHOWING GEOTEXTILE FABRIC

(BACKFILL SOIL NOT SHOWN)

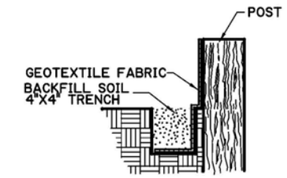

SECTION THRU TRENCH SHOWING GEOTEXTILE FABRIC

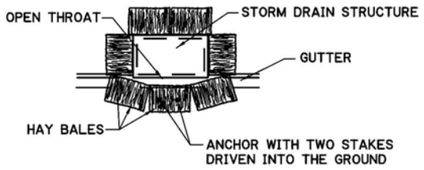

PLAN SHOWING HAY BALES

PAY ITEM: TEMPORARY HAY OR STRAW BALES

TEMPORARY INLET SILT TRAP

THE TEMPORARY DROP INLET SILT TRAP IS TO BE USED FOR SMALL DRAINAGE AREAS (LESS THAN 1 ACRE) WHERE THE STORM DRAIN IS FUNCTIONAL BEFORE THE AREA IS STABILIZED. THE TRAP CAN BE EITHER GEOTEXTILE FABRIC OR HAY BALES.

1. THE GEOTEXTILE FABRIC SHALL CONFORM TO PROJECT SPECIFICATIONS FOR GEOTEXTILE FABRIC (CLASS G).
2. WOODEN STAKES SUPPORTING THE FABRIC SHALL BE 2" X 2" OR 2" X 4" WITH A MINIMUM LENGTH OF 3 FEET. THE STAKES SHALL BE SPACED AROUND THE INLET AT A MAXIMUM SPACING OF 3 FEET.
3. THE HEIGHT OF THE FABRIC ABOVE THE INLET SHALL BE LIMITED TO 1.5' AND THE BOTTOM OF THE FABRIC SHALL BE BURIED IN A TRENCH APPROXIMATELY 4" WIDE BY 4" DEEP. THE FABRIC SHALL BE STAPLED TO THE POST WITH ½" STAPLES.
4. THE TRAP SHOULD BE INSPECTED REGULARLY AND AFTER EACH STORM. THE SEDIMENT SHOULD BE REMOVED AND EACH STAKE SHOULD BE FIRMLY IN THE GROUND.
5. HAY BALES SHALL BE PLACED SO THAT THE BINDING WIRE OR TWINE IS NOT IN CONTACT WITH THE GROUND.

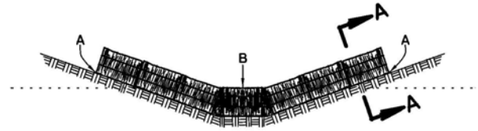

POINTS A SHOULD BE HIGHER THAN POINT B.

ELEVATION

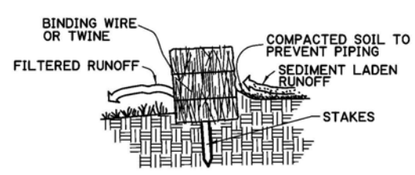

SECTION A-A

TEMPORARY SEDIMENT CHECK DAM (HAY)

PAY ITEM: TEMPORARY SEDIMENT CHECK DAM (HAY)

NOTES:
A HAY BALE BARRIER IS A TEMPORARY SEDIMENT BARRIER CONSISTING OF A ROW OF ENTRENCHED AND ANCHORED BALES OF STRAW OR HAY. THE HAY BALE BARRIER IS ALSO USED AS A CHECK DAM TO REDUCE THE VELOCITY IN SMALL DITCHES OR SWALES. THE HAY BALES SHALL BE IN ACCORDANCE WITH PROJECT SPECIFICATIONS FOR TEMPORARY EROSION CONTROL.
A FEW BASIC DESIGN GUIDELINES FOR THE USE OF A HAY BALE BARRIER ARE:

1. USE WHERE EROSION WOULD OCCUR IN THE FORM OF SHEET AND RILL EROSION
2. USE IN MINOR SWALES OR DITCHES WHERE THE MAXIMUM DRAINAGE AREA IS 2 ACRES
3. ONLY USE WHERE THE EFFECTIVENESS IS REQUIRED FOR LESS THAN 3 MONTHS
4. DO NOT USE IN LIVE STREAMS OR IN SWALES OR DITCHES WHERE THERE IS A POSSIBILITY OF A WASHOUT

FOR INFORMATIONAL USE

SHEET NUMBER

PARISH | CONTROL SECTION | STATE PROJECT

DESIGN JCM | DETAIL KAJ | REVIEW | SERIES # 1 OF 2
CHECK | CHECK JCM

APPROVED BY CHIEF ENGINEER: DATE: 6/1/2026

NO. | DATE | REVISION OR CHANGE ORDER DESCRIPTION | BY

STATE OF LOUISIANA DEPARTMENT OF TRANSPORTATION & DEVELOPMENT

TEMPORARY EROSION CONTROL DETAILS

EC-01

DOTD LOUISIANA DEPARTMENT OF TRANSPORTATION & DEVELOPMENT

STANDARD PLAN

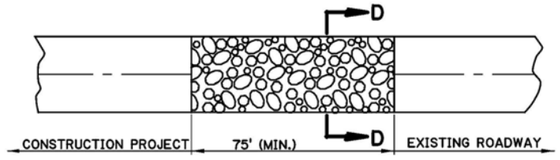

PLAN

SECTION D-D

TEMPORARY STONE CONSTRUCTION ENTRANCE

PAY ITEM: TEMPORARY STONE CONSTRUCTION ENTRANCE

NOTES:

TEMPORARY STONE CONSTRUCTION ENTRANCE AND/OR WASH RACK

A STONE STABILIZED PAD LOCATED AT POINTS OF VEHICULAR INGRESS AND EGRESS ON THE CONSTRUCTION SITE TO REDUCE THE AMOUNT OF MUD TRANSPORTED ONTO PUBLIC ROADS. IF THE ACTION OF THE VEHICLE TRAVELING OVER THE GRAVEL PAD IS NOT SUFFICIENT TO REMOVE THE MAJORITY OF THE MUD, THEN THE TIRES MUST BE WASHED BEFORE THE VEHICLE ENTERS A PUBLIC ROAD. A FEW BASIC DESIGN GUIDELINES FOR THE USE OF A STONE ENTRANCE AND/OR WASH RACKS ARE:

1. THE STONE LAYER MUST BE AT LEAST 6 INCHES THICK.
2. THE STONE SHALL CONFORM TO PROJECT SPECIFICATIONS FOR RIPRAP (CLASS 2 LB).
3. THE LENGTH OF THE PAD MUST BE A LEAST 75 FEET AND IT MUST EXTEND THE FULL WIDTH OF THE VEHICULAR INGRESS AND EGRESS.
4. A GEOTEXTILE FABRIC UNDERLINER IS REQUIRED. THE GEOTEXTILE FABRIC SHALL BE IN ACCORDANCE WITH PROJECT SPECIFICATIONS FOR GEOTEXTILE FABRIC (CLASS D).
5. IF A WASH RACK IS NECESSARY, PROVISIONS MUST BE MADE TO INTERCEPT THE WASH WATER AND TRAP THE SEDIMENT BEFORE IT IS CARRIED OFF-SITE.

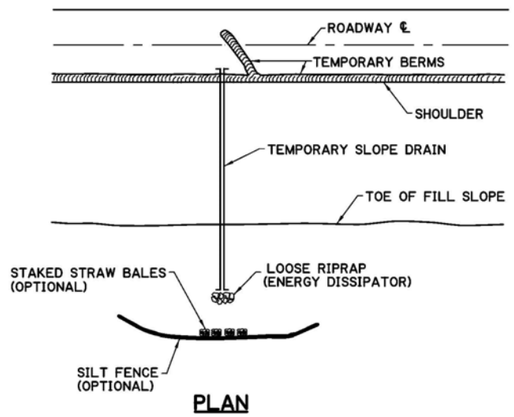

PLAN

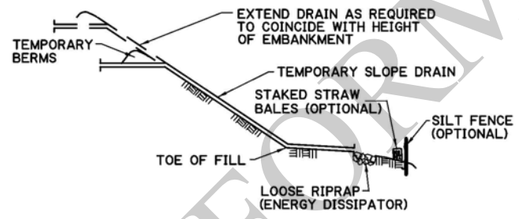

ELEVATION

TEMPORARY SLOPE DRAIN

A TEMPORARY SLOPE DRAIN IS A DEVICE USED TO CARRY WATER FROM THE CONSTRUCTION WORK AREA TO A LOWER ELEVATION. SLOPE DRAINS MAY BE PLASTIC SHEET, METAL OR PLASTIC PIPE, STONE GUTTERS, FIBER MATS, OR CONCRETE OR ASPHALT DITCHES. A FEW BASIC DESIGN GUIDELINES FOR THE USE OF A TEMPORARY SLOPE DRAIN ARE:

1. THE SPACING OF THE SLOPE DRAINS VARIES WITH THE ROAD GRADE.
   FOR GRADES: 0.0% - 2.0% USE 500' SPACING
   2.1% - 5.0% USE 200' SPACING
   GREATER THAN 5.0% USE 100' SPACING
2. SLOPE DRAIN MATERIAL: SMOOTH PIPE - 8" MINIMUM - 3 MILS THICK MIN.
   CORRUGATED PIPE - 12" MINIMUM
   PLASTIC SHEETING - 4' WIDE MINIMUM
   PLASTIC SHEETING - 3 MILS THICK MIN.
3. PLASTIC SHEETING CAN BE STAKED DOWN OR WEIGHTED WITH ROCKS OR LOGS. THE AREA UNDER THE SHEETING SHOULD BE SHAPED TO PROVIDE AN ADEQUATE CHANNEL.
4. THE OUTLET END SHOULD BE PROTECTED OR HAVE SOME MEANS OF DISSIPATING ENERGY. THE FLOW SHOULD BE DIRECTED THROUGH A SEDIMENT TRAP SUCH AS A SILT FENCE, HAY BALES, OR OTHER APPROVED SEDIMENT CONTROL DEVICES.
5. TO INSURE PROPER OPERATION, TEMPORARY SLOPE DRAINS SHOULD BE INSPECTED REGULARLY AND AFTER EACH STORM, FOR CLOGGING OR DISPLACEMENT. EROSION AT THE OUTLET SHOULD BE CHECKED AND THE SILT TRAPS CLEANED IF NECESSARY.

1. SET POSTS AND EXCAVATE A 4" X 4" TRENCH UPSLOPE ALONG THE LINE OF POSTS.

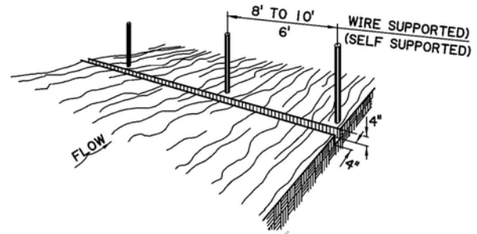

2. STAPLE WIRE FENCING TO THE POSTS.

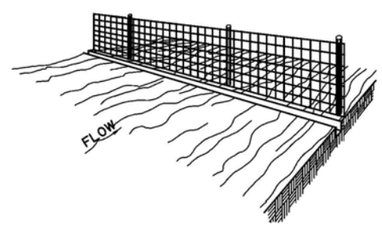

3. ATTACH THE FILTER FABRIC TO THE WIRE FENCE AND EXTEND IT INTO THE TRENCH.

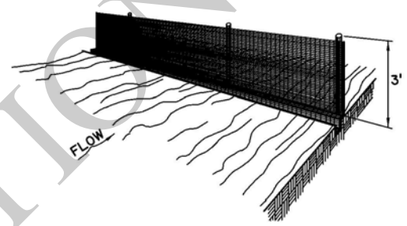

4. BACKFILL AND COMPACT EXCAVATED SOIL.

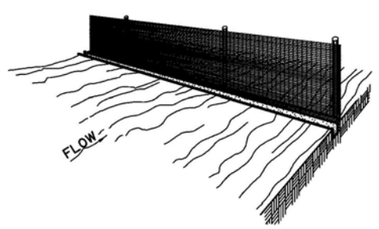

EXTENSION OF FABRIC INTO THE TRENCH.

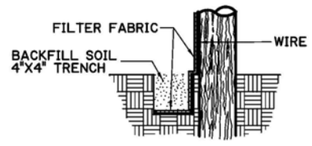

CONSTRUCTION OF TEMPORARY SILT FENCING

(WIRE SUPPORTED SILT FENCE IS SHOWN. SELF SUPPORTED SILT FENCE WILL BE CONSTRUCTED ACCORDING TO MANUFACTURERS SPECIFICATIONS.)

NOTES:

SILT FENCING IS A TEMPORARY SEDIMENT BARRIER CONSISTING OF A FILTER FABRIC SUPPORTED BY POSTS AND STRETCHED ACROSS AN AREA TO INTERCEPT AND DETAIN SMALL AMOUNTS OF SEDIMENT. THE SILT FENCING SHALL BE IN ACCORDANCE WITH PROJECT SPECIFICATIONS FOR TEMPORARY EROSION CONTROL. A FEW BASIC GUIDELINES FOR THE USE OF SILT FENCING ARE:

1. USE WHERE EROSION WOULD OCCUR IN THE FORM OF SHEET AND RILL EROSION
2. USE WHERE THE MAXIMUM DRAINAGE AREA BEHIND THE SILT FENCE IS ¼ ACRE PER 100 FEET OF SILT FENCE LENGTH
3. USE WHERE THE MAXIMUM SLOPE LENGTH BEHIND THE BARRIER IS 100 FEET
4. USE THERE THE MAXIMUM GRADIENT BEHIND THE BARRIER IS 2:1
5. DO NOT USE SILT FENCES IN LIVE STREAMS OR IN DITCHES OR SWALES WHERE FLOWS EXCEED ONE CUBIC FOOT PER SECOND

FOR INFORMATIONAL USE

SHEET NUMBER

PARISH | CONTROL SECTION | STATE PROJECT

DESIGN JCM | DETAIL KAJ | REVIEW | SERIES # 2 OF 2
CHECK | CHECK JCM

APPROVED BY CHIEF ENGINEER:

DATE: 6/1/2026

NO. | DATE | REVISION OR CHANGE ORDER DESCRIPTION | BY

STATE OF LOUISIANA DEPARTMENT OF TRANSPORTATION AND DEVELOPMENT

TEMPORARY EROSION CONTROL DETAILS

EC-01

DOTD LOUISIANA DEPARTMENT OF TRANSPORTATION & DEVELOPMENT

STANDARD PLAN

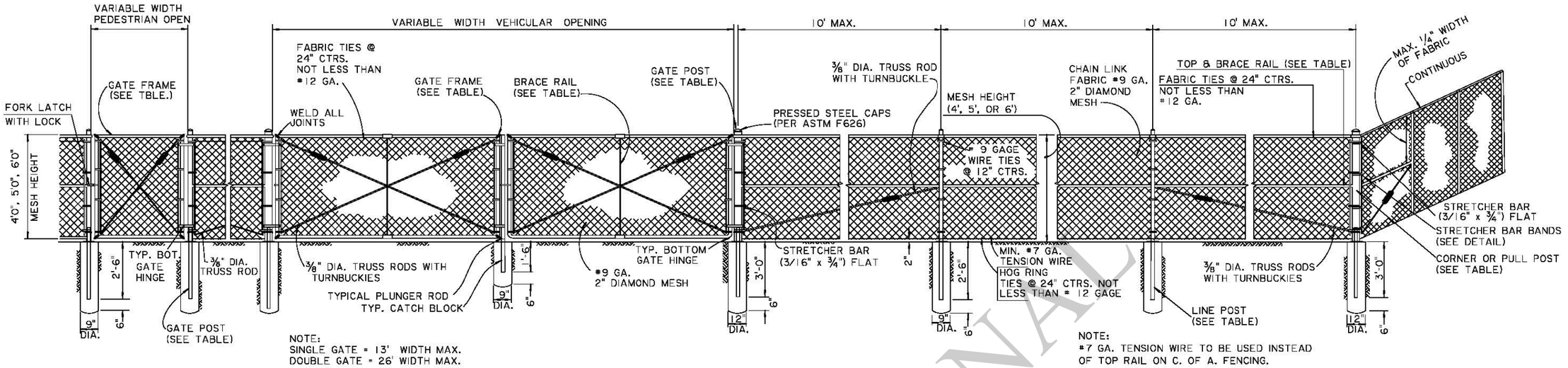

NOTE:
SINGLE GATE = 13' WIDTH MAX.
DOUBLE GATE = 26' WIDTH MAX.

NOTE:
#7 GA. TENSION WIRE TO BE USED INSTEAD OF TOP RAIL ON C. OF A. FENCING.

CHAIN LINK FENCE (4', 5', AND 6')

NOTE: ALL CONC. FOOTING SHALL BE CROWNED 2" ABOVE GRADE LINE.

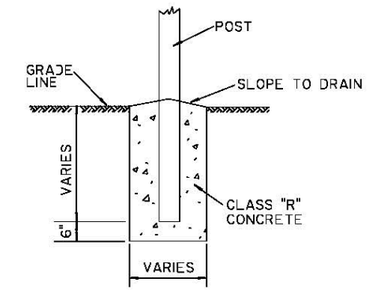

DETAIL OF POST FOOTING

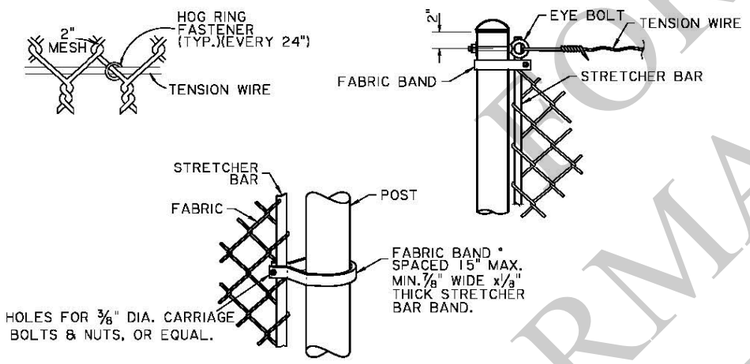

FABRIC & TENSION WIRE DETAILS

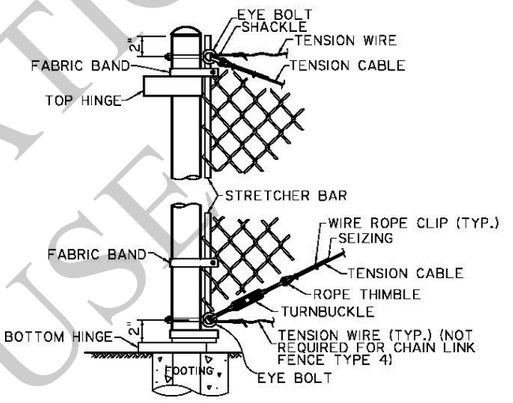

GATE POST DETAIL

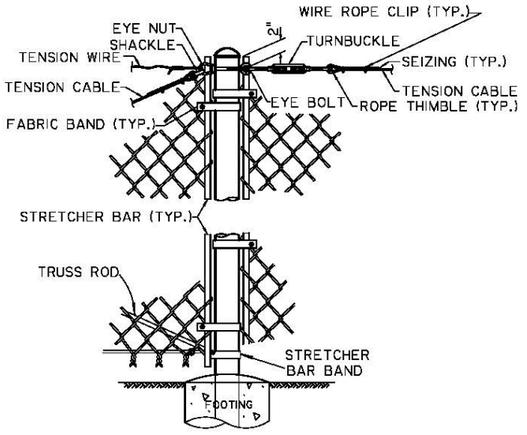

BRACE & TRUSS CONNECTION AT LINE POST

NOTES:

1. THE FENCE INSTALLATION AND DETAILS SHOWN ARE TYPICAL AND MAY VARY IN ACCORDANCE WITH DIFFERENT MANUFACTURERS, PROVIDED THEY MEET THE STANDARD SPECIFICATIONS.
2. TYPICAL INSTALLATION PLAN MAY VARY AS SHOWN ON THE PLANS OR AS DIRECTED BY THE ENGINEER. LOCATION OF GATES TO BE SHOWN ON PLANS.
3. GROUNDING DEVICES ARE TO BE INSTALLED IN ACCORDANCE WITH THE STANDARD SPECIFICATIONS.
4. CONNECTIONS TO ALUMINUM ALLOY OF ALUMINUM COATED FENCE TO BE MADE WITH STEEL MECHANICAL CONNECTORS. ALL OTHER MECHANICAL CONNECTORS TO BE BRONZE.
5. ALL BOLTS TO BE UPSET TO DISCOURAGE VANDALISM.
6. ALL CONNECTION METHODS TO BE APPROVED BY THE PROJECT ENGINEER.
7. LOCATION OF GATES TO BE SHOWN ON PLANS.
8. LATERAL FENCE TO BE SAME CONSTRUCTION AS FRONTAL FENCE.
9. C OF A FENCE SHALL BE 5 FT IN HEIGHT UNLESS OTHERWISE NOTED IN THE PLANS.
10. AT EACH LOCATION WHERE AN ELECTRIC TRANSMISSION, DISTRIBUTION, OR SECONDARY LINE CROSSES A FENCE, THE CONTRACTOR SHALL FURNISH AND INSTALL A GROUND CONFORMING TO ARTICLE 250 OF THE NATIONAL ELECTRIC CODE. A GROUND SHALL ALSO BE INSTALLED A MAXIMUM OF EVERY 500 FT. ALONG THE FENCE. THE GROUND ROAD SHALL BE A MINIMUM DIAMETER OF 1/2IN. AND 8 FT. IN LENGTH, AND DRIVEN AT LEAST 7/8FT. INTO THE GROUND. THE ROD SHALL BE CONNECTED TO EACH WIRE WITH A MINIMUM AWG NO. 8 STRANDED COPPER WIRE. GROUNDING WILL NOT BE PAID FOR SEPERATELY BUT SHALL BE INCLUDED IN THE COST OF THE FENCE.
11. SEE ASHTO M-181 FOR ADDITIONAL REQUIREMENTS.

POST & RAIL TABLE

	STANDARD		ALTERNATES			
	OUTSIDE DIA. (INCHES)	LBS. (PER LIN.FT.)	DIMENSION (INCHES)	SECTION	LBS. (PER LIN.FT.)	ASTM F1043 GROUP
LINE POST	2 3/8	3.65	2.375	ROUND	3.12	
			2.25 X 1.70	H	3.26	III
			2.25 X 1.70	HEAVY C	2.78	II
			1.875 X 1.625	STD. C	2.40	II
BRACE RAIL	1 5/8	2.27	1.660	ROUND	1.84	
COR. POST	2 7/8	5.79	2.875	ROUND	4.64	
GATE POST	4.0	9.10	3.500	ROUND	5.71	IC
GATE FRAME	1 7/8	2.72	1.900	ROUND	2.28	

7 FT FENCE

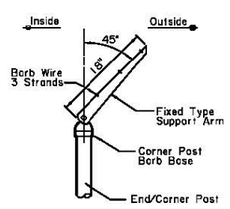

CORNER POST SUPPORT ARM

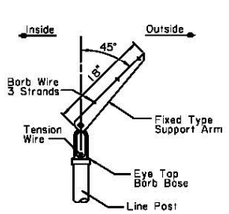

LINE POST SUPPORT ARM

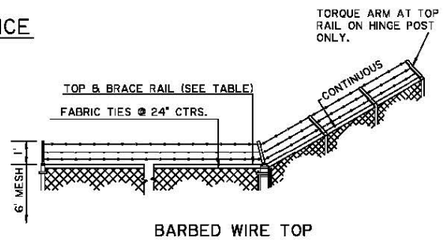

BARBED WIRE TOP

INFORMATIONAL USE

SHEET NUMBER

PARISH | CONTROL SECTION | STATE PROJECT

DESIGN CHECK | DETAIL CHECK | REVIEW | SERIES # 1 OF 1

APPROVED BY CHIEF ENGINEER: DATE: 6/1/2026

REVISION OR CHANGE ORDER DESCRIPTION | NO. | DATE | BY

STATE OF LOUISIANA DEPARTMENT OF TRANSPORTATION AND DEVELOPMENT

CHAIN LINK FENCE & GATES
4 FT., 5 FT., 6 FT., & 7 FT.

FN-01

DOTD LOUISIANA DEPARTMENT OF TRANSPORTATION & DEVELOPMENT

STANDARD PLAN

NOTE: GROUNDING DEVICES ARE TO BE INSTALLED IN ACCORDANCE WITH THE STANDARD SPECIFICATIONS.

CONNECTION TO ALUMINUM ALLOY OR ALUMINUM COATED FENCE TO BE MADE WITH STEEL MECHANICAL CONNECTORS. ALL OTHER MECHANICAL CONNECTORS TO BE BRONZE.

ALL CONNECTION METHODS TO BE APPROVED BY PROJECT ENGINEER.

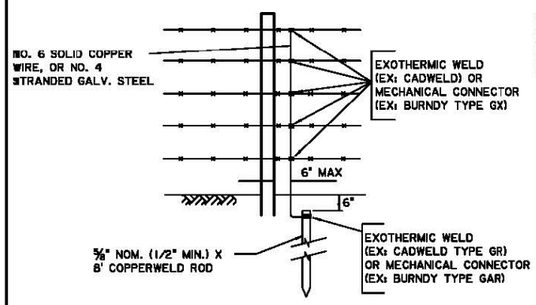

5-STRAND BARBED WIRE

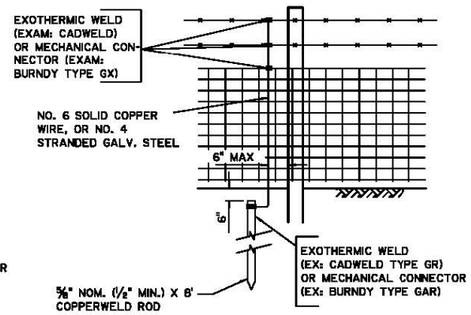

COMBINATION MESH & BARBED WIRE

GROUNDING DETAILS

ALL POST DIAMETERS ARE MEAN DIAM. AT SMALL END.
ALL WOODEN POSTS AND BRACES SHALL BE EITHER ROUND OR SAWED.

TREATED WOODEN LINE POST
(NOMINAL 4" DIA.)

NOTE: GATES ARE TO OPEN AWAY FROM HIGHWAY UNLESS OTHERWISE DIRECTED BY ENGINEER.

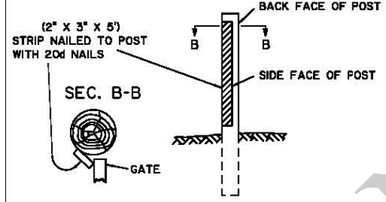

DETAIL AT STOP FOR WOODEN GATE POST

DETAIL OF STIFF STAY KNOT JOINT
NOMINAL DIAMETER OF ZINC-COATED WIRE, 0.099 In.
VARIATION ± 0.004 IN.
(DESIGN NO. 939-6-12½")

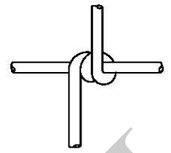

DETAIL OF HINGED JOINT
NOMINAL DIAMETER OF ZINC-COATED WIRE, 0.099 In.
VARIATION ± 0.004 IN.
(DESIGN NO. 939-6-12½")

SUGGESTED TYPE SCREW HOOK HINGE FOR WOODEN POST
¾" X 7½" SCREW HOOK HINGE

NOTE: LINE POST TO BE LOCATED OUTSIDE OF R/W LINE.
WIRE TO BE PLACED ON OUTSIDE OF R/W, UNLESS OTHERWISE DIRECTED BY ENGINEER OR REQUESTED BY PROPERTY OWNER AND APPROVED BY ENGINEER.
FOR CONTROL OF ACCESS, LINE POST TO BE LOCATED WITHIN HIGHWAY R/W.

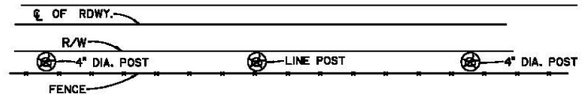

DETAIL SHOWING LOCATION OF FENCE IN RELATION TO THE R/W LINE

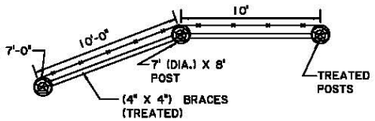

SHOWING BRACES AT OBLIQUE* ANGLE CORNERS

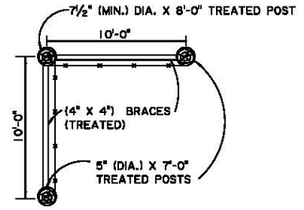

SHOWING BRACES AT RIGHT ANGLE CORNERS*

NOTE: BRACES SHALL BE PLACED ON STRAIGHT SECTIONS OF FENCE NOT MORE THAN 500' APART.

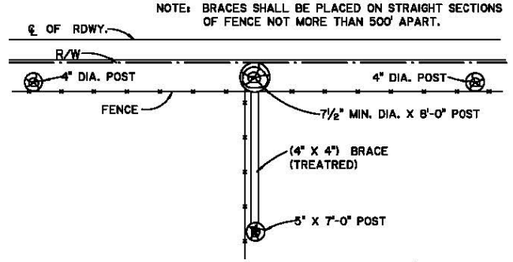

INTERSECTING BRACES ALONG R/W* TO BE INSTALLED IN FENCES

ALL INTERSECTING FENCES TO BE SECURELY ATTACHED TO FRONTAGE FENCE AS SHOWN HERE.

⊙NOTE: 13½GAGE OR 15½GAGE BARBED WIRE WILL BE PERMITTED, PROVIDED THE BREAKING STRENGTH OF THE WIRE EXCEEDS 950 LB.

1¾" GALV. STAPLES TO BE USED IN WOODEN POSTS.
GALV. STAPLES TO BE PLACED ON TOP AND BOTTOM STRANDS AND EVERY OTHER WIRE BETWEEN, ALTERNATING ON SUCCESSIVE POSTS.

NOTE:
METAL LINE POSTS MAT BE USED IN CONJUNCTION WITH WOODEN CORNER GATE AND BRACE POSTS, PROVIDED THAT METAL AND WOODEN POSTS ARE NOT MIXED BETWEEN CORNER POSTS.

*NOTE:
FOR ALTERNATE METHOD OF BRACING SEE SHT. 2 OF THIS STANDARD (FN-02).

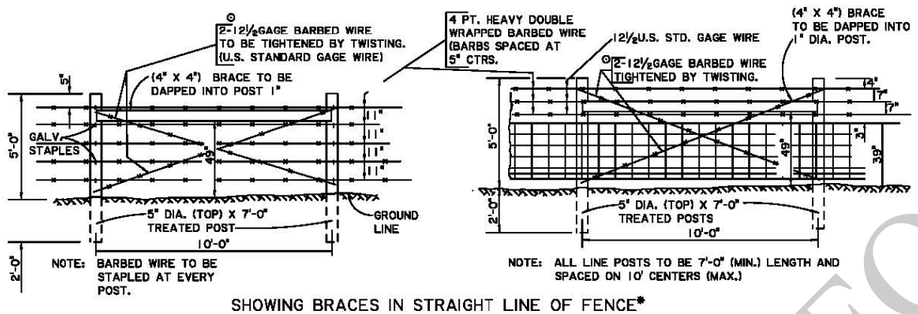

NOTE: BARBED WIRE TO BE STAPLED AT EVERY POST.

SHOWING BRACES IN STRAIGHT LINE OF FENCE*

NOTE: ALL LINE POSTS TO BE 7'-0" (MIN.) LENGTH AND SPACED ON 10' CENTERS (MAX.)

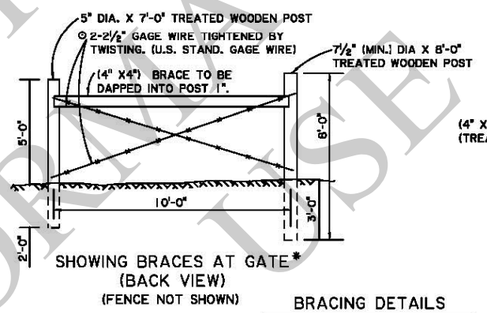

SHOWING BRACES AT GATE*
(BACK VIEW)
(FENCE NOT SHOWN)

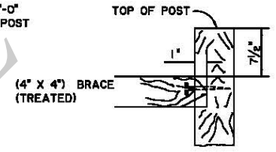

DETAIL OF BRACE DAPPED INTO POST

BRACING DETAILS

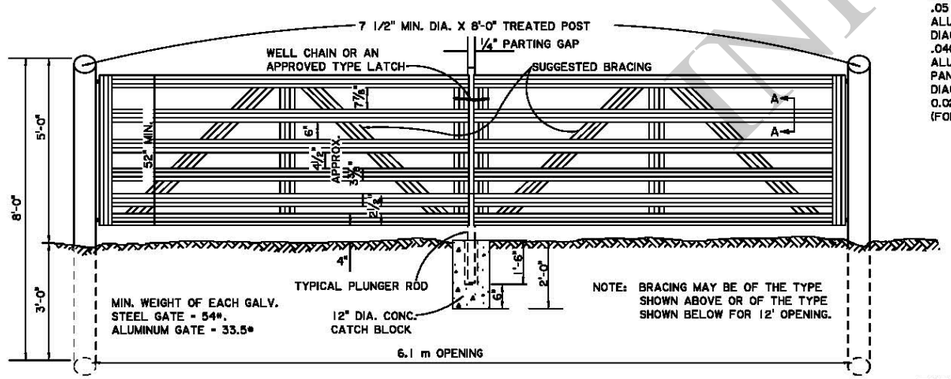

DOUBLE SWINGING DRIVEWAY GATE
(ALUMINUM OR GALVANIZED STEEL)
(SUGGESTED TYPE)

HORIZONTAL PANELS TO BE .051" THICK (MIN.) (FOR ALUM. GATE). VERTICAL AND DIAGONAL BRACES TO BE .040" THICK (MIN.) (FOR ALUM. GATE). HORIZONTAL PANELS, VERTICAL AND DIAGONAL BRACE TO BE 0.025" THICK (MIN.) (FOR GALV. GATE).

TYPICAL SECTION THRU PANEL SECTION A-A

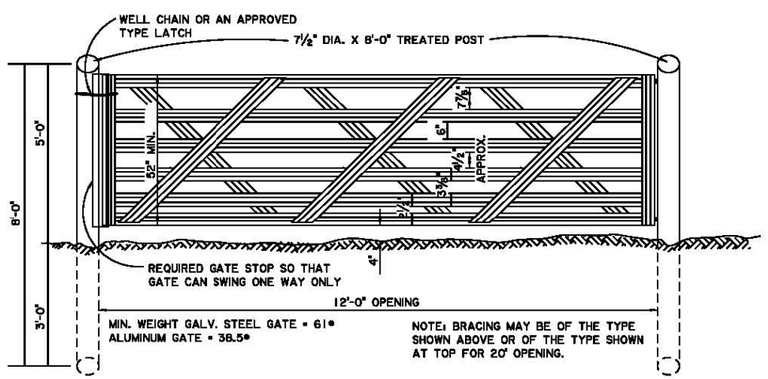

SINGLE SWINGING DRIVEWAY GATE
(ALUMINUM OR GALVANIZED STEEL)
(SUGGESTED TYPE)

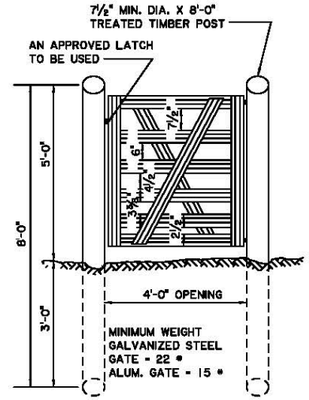

SINGLE SWINGING WALKGATE
(ALUMINUM OR GALVANIZED STEEL)
(SUGGESTED TYPE)

FOR INFORMATIONAL USE

SHEET NUMBER
PARISH
CONTROL SECTION
STATE PROJECT
DESIGN CHECK
DETAIL CHECK
REVIEW
SERIES # 1 OF 2
APPROVED BY CHIEF ENGINEER:
DATE: 6/1/2026
NO. DATE REVISION OR CHANGE ORDER DESCRIPTION BY

STATE OF LOUISIANA DEPARTMENT OF TRANSPORTATION AND DEVELOPMENT

FIELD AND LINE TYPE FENCE (WOOD POST)

FN-02

DOTD
LOUISIANA DEPARTMENT OF TRANSPORTATION & DEVELOPMENT

STANDARD PLAN

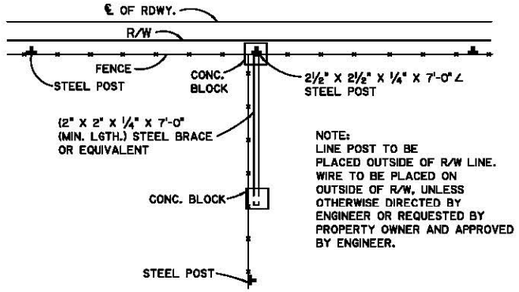

INTERSECTING BRACES ALONG R/W
TO BE INSTALLED IN FENCES *

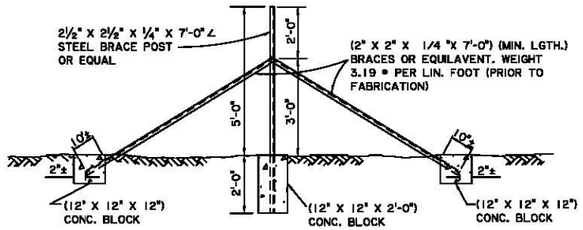

METHOD OF BRACING IN STRAIGHT LINE
FENCE (FENCE NOT SHOWN) *

NOTE: LINE POST TO BE PLACED OUTSIDE OF R/W LINE.

FOR CONTROL OF ACCESS, LINE POST TO BE LOCATED WITHIN HIGHWAY R/W.

DETAIL SHOWING LOCATION OF FENCE
IN RELATION TO THE R/W LINE

NOTE: FOR DETAILS OF GROUNDING SEE SHEET 1.
* FOR ALTERNATE METHOD OF BRACING SEE SHEET 1 OF THIS STANDARD.

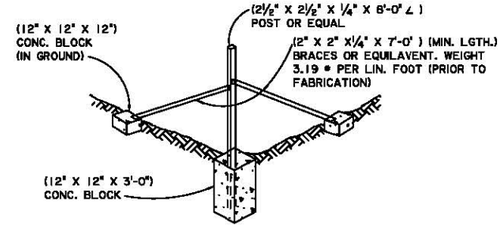

STEEL POST AND BRACES
METHOD OF BRACING CORNERS
OBLIQUE & INTERSECTING FENCES*

NOMINAL WEIGHTS: CORNER END AND BRACING POSTS 4.10 * PER LIN. FOOT (PRIOR TO FABRICATION).

NOTE: WOODEN POSTS MAY BE USED IN CONJUNCTION WITH STEEL CORNER AND GATE POSTS, PROVIDED THAT WOODEN AND METAL POSTS ARE NOT MIXED BETWEEN CORNER POSTS.

* SEE ASTM A702 FOR DIMENSIONS AND DETAILS.

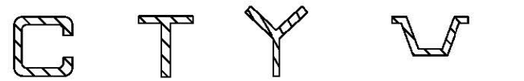

"C" POST (STEEL) | "T" POST* (STEEL) | "Y" POST* (STEEL) | FLANGE "U" POST* (STEEL)

2.25" X 1.70"
2.73 LBS PER FOOT
MIN. YIELD ST. 45 KSI.

SUGGESTED TYPES OF STEEL FENCE POSTS

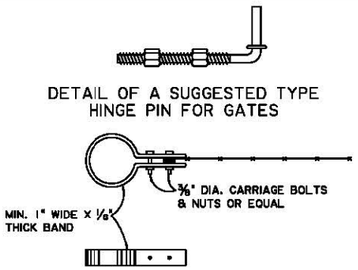

DETAIL OF A SUGGESTED TYPE
HINGE PIN FOR GATES

DETAIL OF SUGGESTED TYPE BAND
NOTE: FOR HOLDING BARBED WIRE AT GATE POSTS.

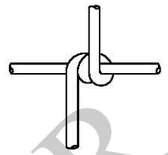

DETAIL OF HINGED JOINT

NOMINAL DIA. OF ZINC-COATED WIRE, 0.099 In. VARIATION ± 0.0004 In. (DESIGN NO. 939-6-12 1/2)

DETAIL OF STIFF STAY KNOT JOINT

NOMINAL DIA. OF ZINC-COATED WIRE, 0.099 In. VARIATION ± 0.0004 In. (DESIGN NO. 939-6-12 1/2)

LINE POST SHALL BE DRIVEN. TOP TO BE PROTECTED TO PREVENT BURRING. NOMINAL WEIGHT 1.33 * PER LINEAR FOOT (PRIOR TO FABRICATION).

SLOTS, NOTCHES OR APPROVED DEVICE FOR FASTENING WIRE TO POST. A MIN. OF 4 HORIZONTAL WIRES TO BE FASTENED TO THE POST FOR THE MESH WIRE. EACH BARB WIRE TO BE FASTENED TO THE POST.

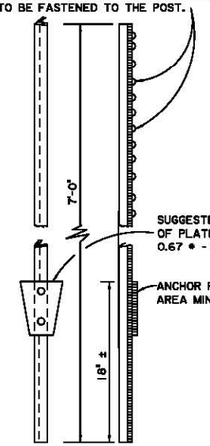

TYPICAL LINE POST

GENERAL NOTES:
GATES ARE TO OPEN AWAY FROM HIGHWAY UNLESS OTHERWISE DIRECTED BY ENGINEER.
ALL INTERSECTING FENCES TO BE SECURELY ATTACHED TO THE FRONTAGE FENCE AS SHOWN.
ALL STEEL POSTS, ANCHOR PLATES, BRACES AND HARDWARE SHALL BE GALVANIZED. (ASTM A 123)

BRACES SHALL BE PLACED ON STRAIGHT SECTIONS OF FENCE NOT MORE THAN 500' APART.
ALL LINE POSTS TO BE 7'-0" (MIN.) LENGTH AND SPACED ON 10' CENTERS (MAX.)

HORIZONTAL PANELS TO BE 0.051" THICK (MIN.) (FOR ALUM. GATE). VERTICAL AND DIAGONAL BRACES TO BE 0.040" THICK (MIN.) (FOR ALUM. GATE). HORIZONTAL PANELS, VERTICAL AND DIAGONAL BRACE TO BE 0.025" THICK (MIN.) (FOR GALV. GATE).

TYPICAL SECTION
THRU PANEL A-A

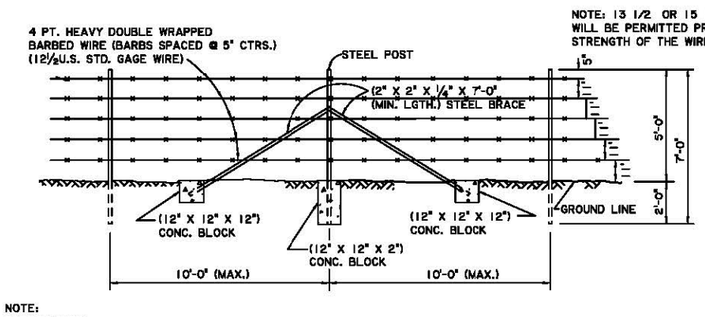

NOTE: 13 1/2 OR 15 1/2 GAGE BARBED WIRE WILL BE PERMITTED PROVIDED THE BREAKING STRENGTH OF THE WIRE EXCEEDS 950 LB.

NOTE: BARBED WIRE TO BE FASTENED AT EVERY POST.

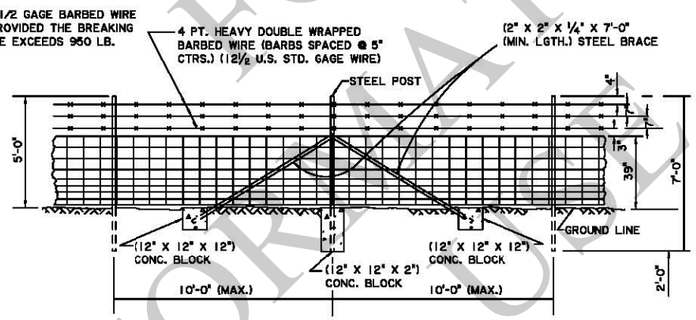

SHOWING BRACE IN STRAIGHT LINE OF FENCE

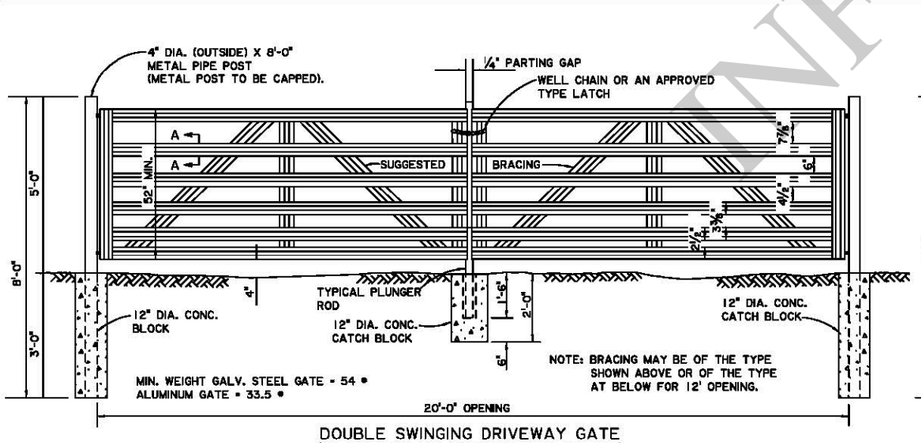

DOUBLE SWINGING DRIVEWAY GATE
(ALUMINUM OR GALVANIZED STEEL)
(SUGGESTED TYPE)

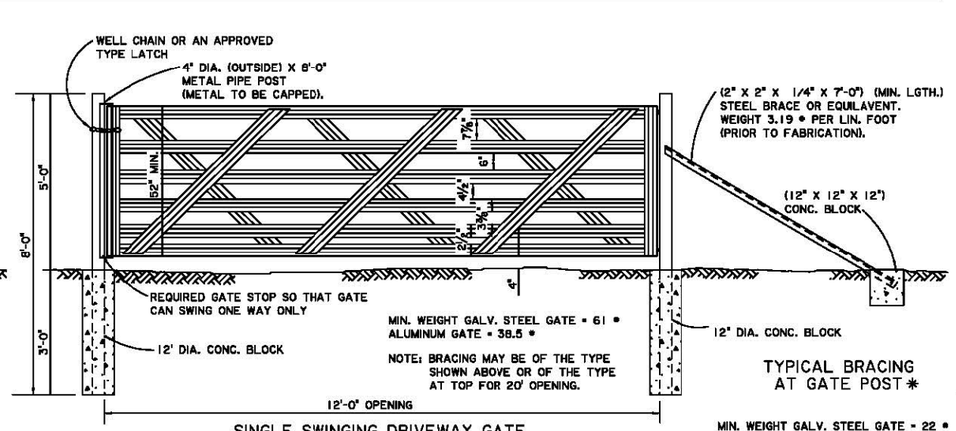

SINGLE SWINGING DRIVEWAY GATE
(ALUMINUM OR GALVANIZED STEEL)

TYPICAL BRACING AT GATE POST *

MIN. WEIGHT GALV. STEEL GATE = 22 *
ALUMINUM GATE = 15 *

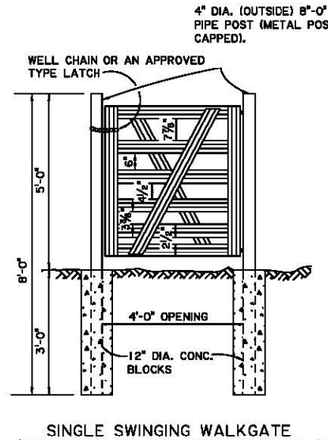

SINGLE SWINGING WALKGATE
(ALUMINUM OR GALVANIZED STEEL)
(SUGGESTED TYPE)

FOR INFORMATIONAL USE ONLY

SHEET NUMBER
PARISH | CONTROL SECTION | STATE PROJECT
DESIGN CHECK | DETAIL CHECK | REVIEW | SERIES # 2 OF 2
APPROVED BY CHIEF ENGINEER:
DATE: 6/1/2026
NO. | DATE | REVISION OR CHANGE ORDER DESCRIPTION | BY

STATE OF LOUISIANA DEPARTMENT OF TRANSPORTATION AND DEVELOPMENT

FIELD AND LINE TYPE FENCE
(STEEEL POST)
FN-02

DOTD
LOUISIANA DEPARTMENT OF TRANSPORTATION & DEVELOPMENT
STANDARD PLAN

12/4/2025 10:32

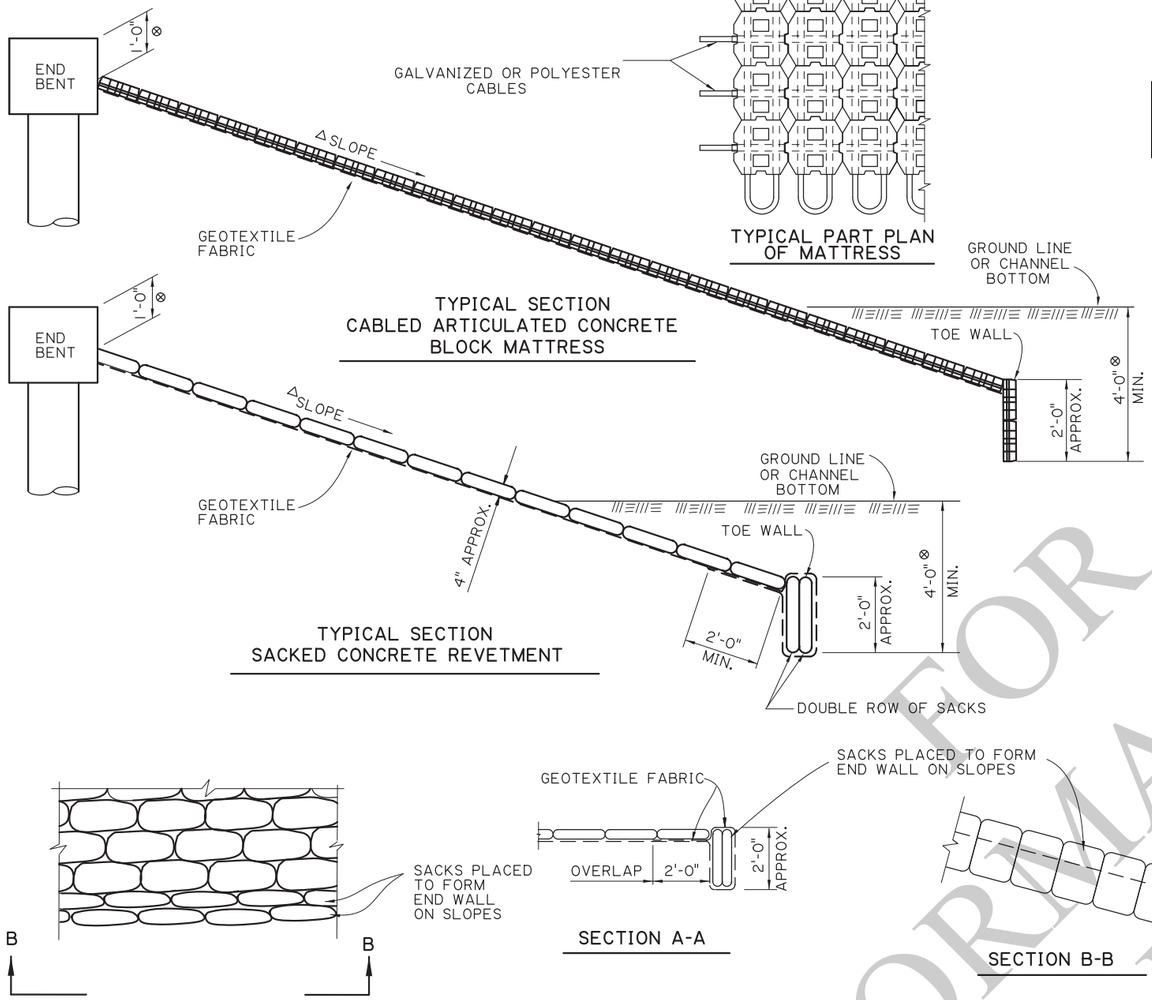

TYPICAL PART PLAN OF MATTRESS

TYPICAL SECTION
CABLED ARTICULATED CONCRETE
BLOCK MATTRESS

TYPICAL SECTION
SACKED CONCRETE REVETMENT

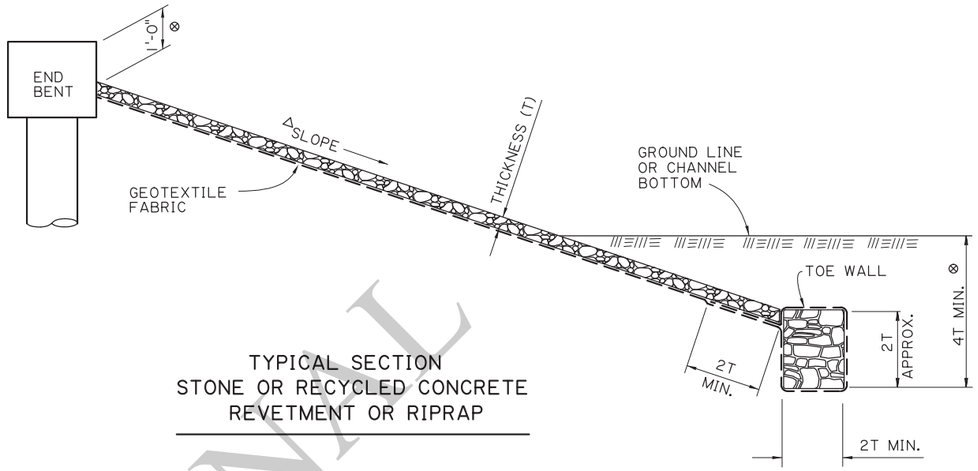

TYPICAL SECTION
STONE OR RECYCLED CONCRETE
REVETMENT OR RIPRAP

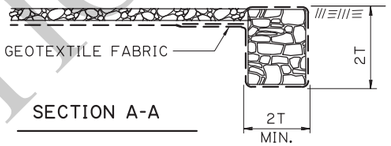

SECTION A-A

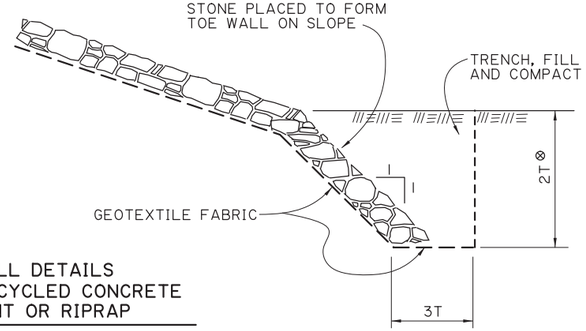

END WALL DETAILS
STONE OR RECYCLED CONCRETE
REVETMENT OR RIPRAP

TYPICAL PART PLAN

SECTION A-A

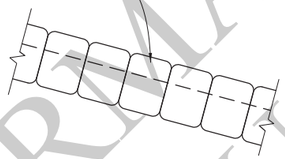

SECTION B-B

END WALL DETAILS
FOR SACKED REVETMENT

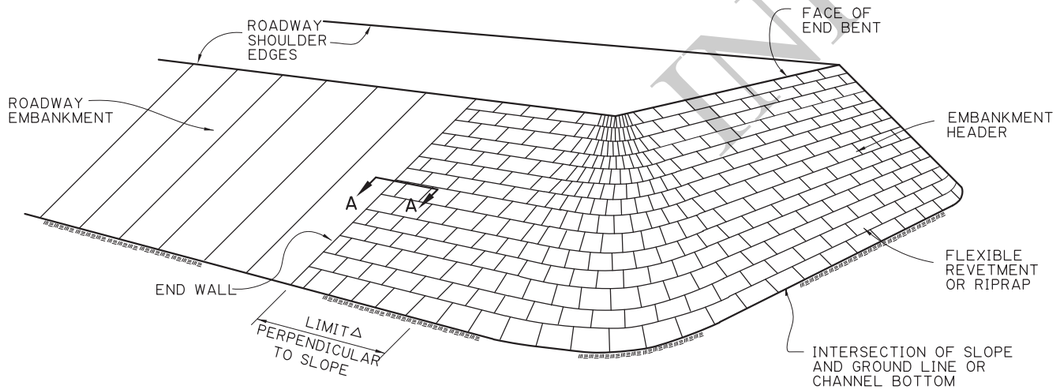

GENERAL VIEW OF
EMBANKMENT SLOPE PROTECTION

RIPRAP CLASS (LBS.)	MINIMUM THICKNESS (T) (INCHES)
⧄ 30	14
✳ 55	18
✳ 130	24
✳ 250	30

✳ STONE ONLY
⧄ EQUIVALENT TO STONE OR RECYCLED CONCRETE REVETMENT.
⊗ UNLESS OTHERWISE SHOWN ON PROJECT PLANS.
△ SEE PROJECT PLANS FOR EMBANKMENT HEADER SLOPE AND LIMITS OF SLOPE PROTECTION ALONG ROADWAY EMBANKMENT.

NOTES:

1. RIPRAP AND FLEXIBLE REVETMENT SHALL BE PLACED IN ACCORDANCE WITH THE SPECIFICATIONS.
2. ELEVATION OF TOE OF SLOPE TO REMAIN CONSTANT FOR ALL PROTECTED SIDES OF THE EMBANKMENT UNLESS SPECIFIED OTHERWISE.
3. WHERE SLOPE PROTECTION FOR ADJACENT EMBANKMENTS INTERSECT, TERMINATE EACH WITH A TOE WALL AS DETAILED ON THIS SHEET EXCEPT WITH WALLS ABUTTING.
4. GEOTEXTILE FABRIC WILL BE PAID FOR UNDER THE DESIGNATED GEOTEXTILE FABRIC PAY ITEM WHEN USED WITH RIPRAP BUT WILL BE CONSIDERED AN INCIDENTAL ITEM AND BE INCLUDED IN THE PAY ITEM FOR REVETMENT.

ALL DETAILS NTS

FOR INFORMATIONAL USE

SHEET NUMBER

PARISH	CONTROL SECTION	STATE PROJECT

DESIGN A. ALLEN | DETAIL G.GRASS | REVIEW | SERIES # I OF I
CHECK | CHECK P. FOSSIER

APPROVED BY CHIEF ENGINEER: DATE: 12/10/2025

NO.	DATE	REVISION OR CHANGE ORDER DESCRIPTION	BY
1	2-18-09	ARTICULATED CONCRETE MATTRESS	PBF

STATE OF LOUISIANA
LOUISIANA DEPARTMENT OF TRANSPORTATION & DEVELOPMENT

FLEXIBLE REVETMENT AND RIPRAP

FR-01

DOTD
LOUISIANA DEPARTMENT OF TRANSPORTATION & DEVELOPMENT

STANDARD PLAN

IP_PWP:d1245748\fr-01.dgn

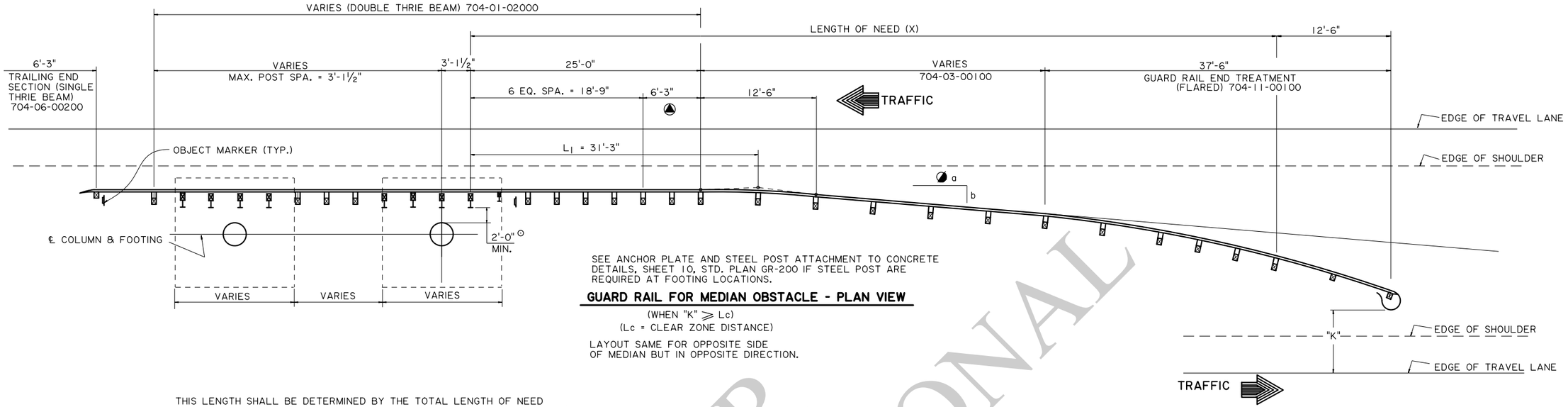

SEE ANCHOR PLATE AND STEEL POST ATTACHMENT TO CONCRETE DETAILS, SHEET 10, STD. PLAN GR-200 IF STEEL POST ARE REQUIRED AT FOOTING LOCATIONS.

GUARD RAIL FOR MEDIAN OBSTACLE - PLAN VIEW

(WHEN "K" ⩾ Lc)
(Lc = CLEAR ZONE DISTANCE)

LAYOUT SAME FOR OPPOSITE SIDE OF MEDIAN BUT IN OPPOSITE DIRECTION.

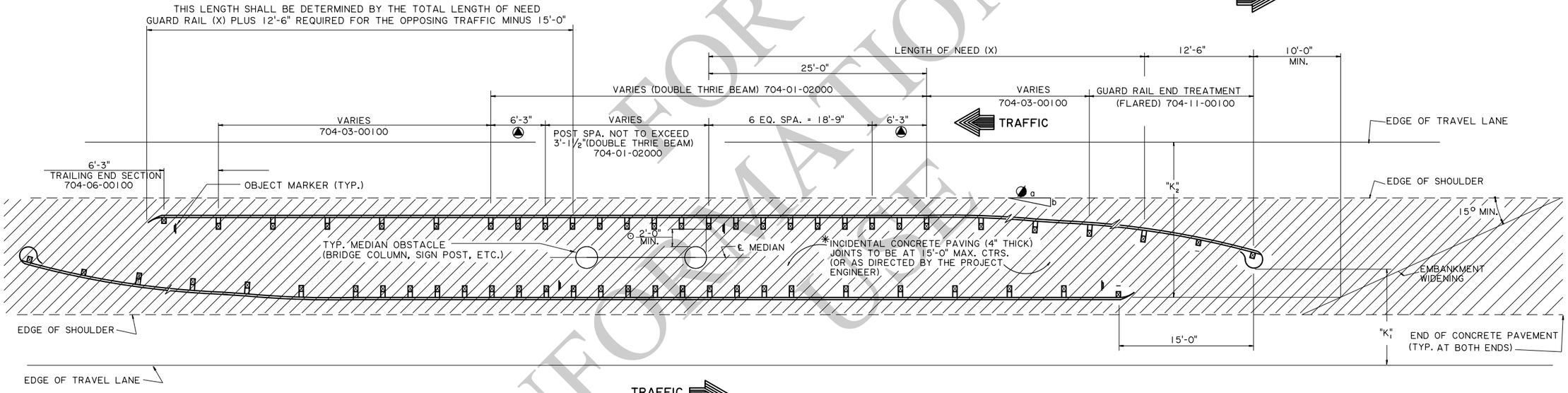

GUARD RAIL FOR MEDIAN OBSTACLE - PLAN VIEW

(ONLY WHEN "K1" < L_C AND "K2" > L_C)
SEE SHT. 2 OF 8 FOR DESIRABLE LAYOUT

NOTES:

THIS STANDARD SHALL BE USED IN CONJUNCTION WITH STANDARD PLAN GR-200

DESIRABLE LOCATION FOR GUARD RAIL: GUARD RAIL SHALL BE PLACED AS FAR AWAY FROM TRAFFIC AS POSSIBLE BUT NO CLOSER THAN 2'-0" FROM THE OBSTACLE AS SHOWN.

FOR CLEARANCES OF MORE THAN 5'-0" ITEM 704-01-02000 MAY BE REPLACED BY ITEM 704-01-01020 WHICH IS A SINGLE THRIE BEAM WITH 6'-3" POST SPACING.

FOR CLEAR ZONE DISTANCE (Lc) SEE TABLE 1, SHEET 2, STD. PLAN GR-200. "K", "K1" AND "K2" ARE DISTANCES MEASURED FROM EDGE OF TRAVEL LANE TO BACK FACE OF GUARD RAIL.

✳ INCIDENTAL CONCRETE PAVING (4" THICK) TO BE PAID FOR UNDER ITEM 706-03-00100, PER SQ. YARD. THE INCIDENTAL CONCRETE WILL BE USED ON THE PROJECT ONLY IF A QUANTITY & PAY ITEM ARE SHOWN ON THE SUMMARY OF ESTIMATED QUANTITIES. SEE SHEET 10, GR-200 STD. PLAN FOR REQUIRED POST PAVING DETAILS.

▲ 6'-3" W BEAM/THRIE BEAM TRANSITION SECTION.

LENGTH OF NEED (X) TO BEGIN AT FIRST POST PRIOR TO OBSTACLE AS SHOWN.

⊙ DIMENSION MEASURED FROM BACK FACE OF GUARD RAIL POST TO FRONT FACE OF OBSTACLE.

◪ FLARE RATE SHALL BE IN ACCORDANCE WITH DESIGN SPEED AS SHOWN ON SHEET 2 STD. PLAN GR-200.

FOR INFORMATIONAL PURPOSES ONLY

SHEET NUMBER

PARISH | CONTROL SECTION | STATE PROJECT

DESIGN | CHECK | DETAIL: G. GRASS | CHECK: P. FOSSIER | REVIEW | SERIES # 1 OF 8

APPROVED BY CHIEF ENGINEER: DATE: 6/29/2026

NO. | DATE | REVISION OR CHANGE ORDER DESCRIPTION | BY

HIGHWAY GUARD RAILS
MEDIAN OBSTACLE
2' MIN. CLEARANCE

GR-201

DOTD LOUISIANA DEPARTMENT OF TRANSPORTATION & DEVELOPMENT

STANDARD PLAN

6/23/2026 11:5
IP_PWP:d1274962\gr201-1.dgn

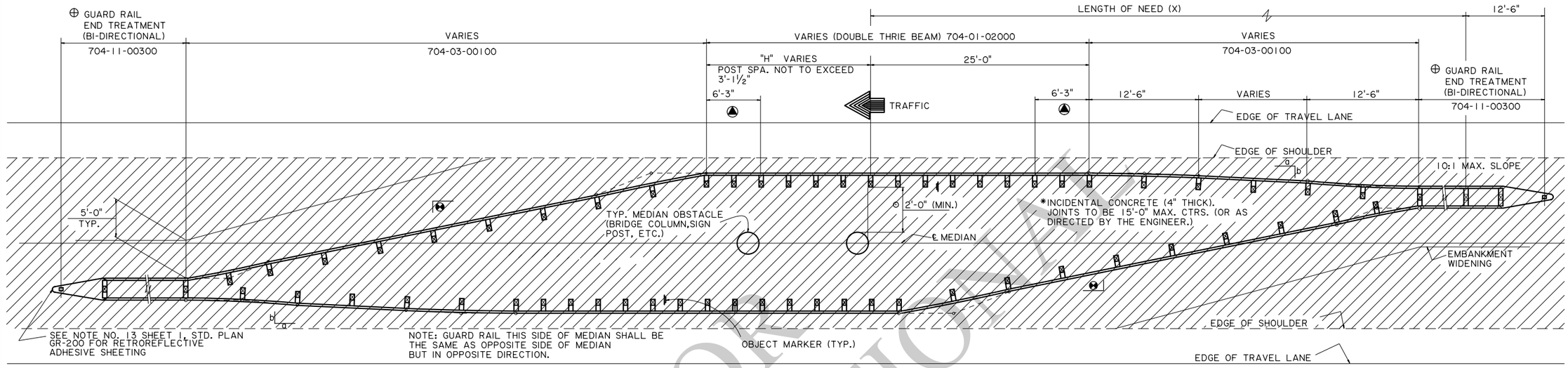

TRAFFIC

GUARD RAIL FOR MEDIAN OBSTACLE (DESIRABLE) - PLAN VIEW

(WHEN "K" < Lc, SEE NOTES AND DETAILS SHT. 1 OF 8)

NOTES:

THIS STANDARD PLAN SHALL BE USED IN CONJUNCTION WITH STANDARD PLAN GR-200.

DESIRABLE LOCATION FOR GUARD RAIL: GUARD RAIL SHALL BE PLACED AS FAR AWAY FROM TRAFFIC AS POSSIBLE BUT NO CLOSER THAN 2'-0" FROM THE OBSTACLE SHOWN.

FOR CLEARANCES OF MORE THAN 5'-0", ITEMS 704-01-02000 MAY BE REPLACED BY ITEM 704-01-01020 WHICH IS SINGLE THRIE BEAM WITH 6'-3" POST SPACING.

FOR CLEAR ZONE DISTANCE (Lc), SEE TABLE 1, SHEET 2, STD. PLAN GR-200

* INCIDENTAL CONCRETE PAVING (4" THICK) IS TO BE PAID FOR UNDER ITEM 706-03-00100 PER SQ. YARD. THE INCIDENTAL CONCRETE WILL BE USED ON THE PROJECT ONLY IF A QUANTITY & PAY ITEM ARE SHOWN ON THE SUMMARY OF ESTIMATED QUANTITIES. SEE SHT. 10, STD. PLAN GR-200 FOR REQUIRED POST PAVING DETAILS.

SEE NOTE 13, SHEET 1 , STD. PLAN GR-200 FOR INFORMATION ON RETROREFLECTIVE ADHESIVE SHEETING FOR GUARD RAIL SYSTEMS.

"H" IS THE SHORTEST MULTIPLE OF 6'-3" WHICH EXCEEDS THE HAZARD LENGTH.

GUARD RAIL SHALL BE FLARED TO MEET THE FRONT THRIE BEAM GUARDRAIL.

SEE STANDARD ITEM, 704-11-00300 FOR GUARD RAIL END TREATMENT (BI-DIRECTIONAL).

6'-3" W BEAM/THRIE BEAM TRANSITION SECTION.

DIMENSION MEASURED FROM BACK FACE OF GUARD RAIL POST TO FRONT FACE OF OBSTACLE.

FOR INFORMATION USE

SHEET NUMBER

PARISH | CONTROL SECTION | STATE PROJECT

DESIGN | DETAIL: G. GRASS | REVIEW | SERIES # 2 OF 8

CHECK | CHECK: P. FOSSIER

APPROVED BY CHIEF ENGINEER: DATE: 6/29/2026

NO.	DATE	REVISION OR CHANGE ORDER DESCRIPTION	BY

HIGHWAY GUARD RAILS
MEDIAN OBSTACLE
2' MIN. CLEARANCE
(DESIRABLE)

GR-201

STANDARD PLAN

6/23/2026 11:4
IP_PWP:d1274962\gr201-2.dgn

6/23/2026 11:3:

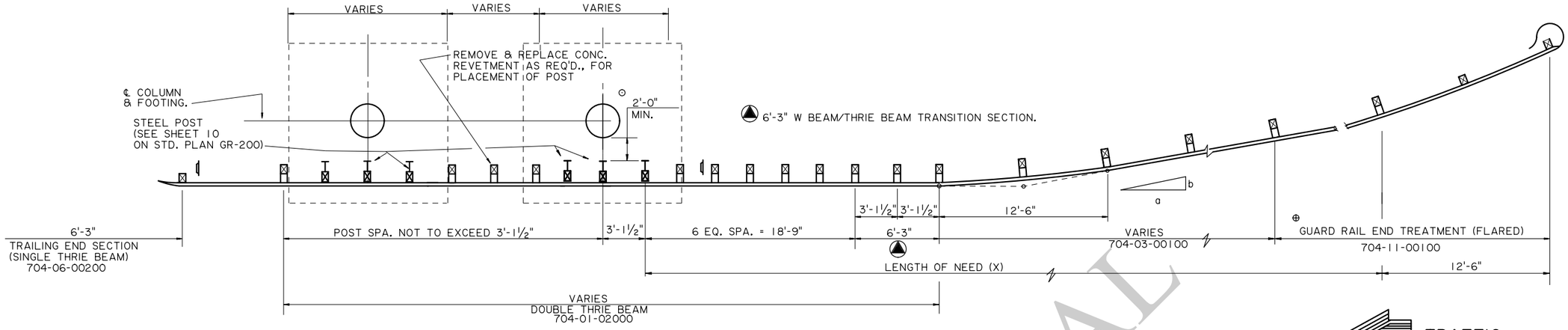

TYPICAL PLAN FOR DIVIDED HIGHWAY - SHOULDER APPLICATIONS

LAYOUT SAME FOR OPPOSITE SIDE OF HIGHWAY
BUT IN OPPOSITE DIRECTION.

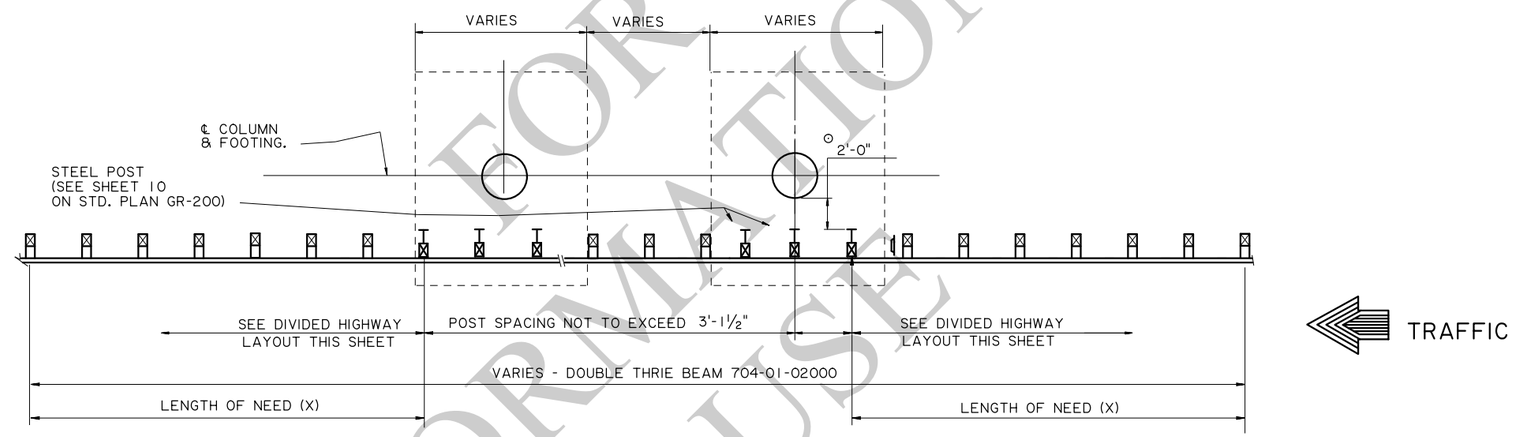

TYPICAL PLAN FOR UNDIVIDED HIGHWAY - SHOULDER APPLICATIONS

LAYOUT SAME FOR OPPOSITE SIDE OF HIGHWAY
BUT IN OPPOSITE DIRECTION.

FOR INFORMATIONAL USE

NOTES:

THIS STANDARD PLAN SHALL BE USED IN CONJUCTION WITH STANDARD PLAN GR-200.

IDEAL LOCATION FOR GUARD RAIL: GUARD RAIL SHALL BE PLACE AS FAR AWAY FROM TRAFFIC AS POSSIBLE BUT NO CLOSER THAN 2'-0" FROM THE OBSTACLE AS SHOWN.

FOR CLEARANCES OF MORE THAN 5'-0" ITEMS 704-01-02000 & 704-01-01000 MAY BE REPLACED BY ITEM 704-01-01020 WHICH IS A SINGLE THRIE BEAM WITH 6'-3" POST SPACING.

FOR CLEAR ZONE DISTANCE (Lc) SEE TABLE 1, SHEET 2, STD. PLAN GR-200

SEE ANCHOR PLATE AND STEEL POST ATTACHMENT TO CONCRETE DETAILS, SHEET 10, STD. PLAN GR-200 IF STEEL POST ARE REQUIRED AT FOOTING LOCATIONS.

⊙ DIMENSION MEASURED FROM BACK FACE OF GUARD RAIL POST TO FRONT FACE OF OBSTACLE.

⊕ SEE NOTE 11, SHT. 1, GR-200 STD. PLAN

LENGTH OF NEED (X) TO BEGIN AT FIRST POST PRIOR TO THE OBSTACLE AS SHOWN.

FOR EMBANKMENT WIDENING, SEE SHT. 1 STD. PLAN GR-200.

IP_PWP:d1274962\gr201-3.dgn

SHEET NUMBER

PARISH | CONTROL SECTION | STATE PROJECT

DESIGN | CHECK | DETAIL: G. GRASS | CHECK: P. FOSSIER | REVIEW | SERIES # 3 OF 8

APPROVED BY CHIEF ENGINEER: DATE: 6/29/2026

REVISION OR CHANGE ORDER DESCRIPTION | DATE | BY | NO.

HIGHWAY GUARD RAILS
DIVIDED AND UNDIVIDED HIGHWAY
SHOULDER APPLICATION
(2' MIN. CLEARANCE)

GR-201

LOUISIANA DEPARTMENT OF TRANSPORTATION & DEVELOPMENT

STANDARD PLAN

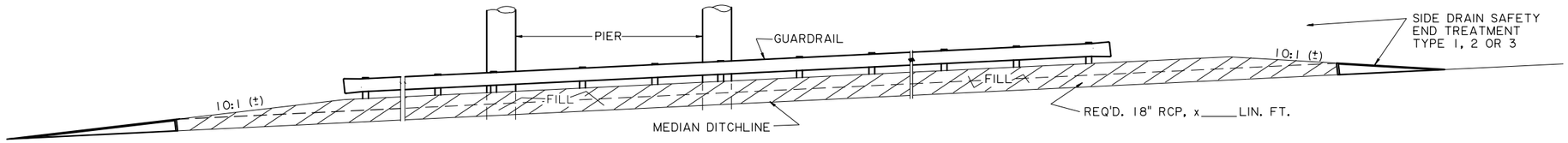

MEDIAN BANK FILL WITH DRAIN FLOW PIPE

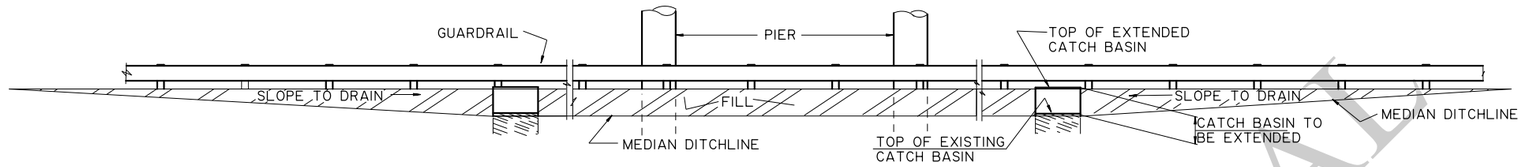

MEDIAN BANK FILL WITH CATCH BASIN

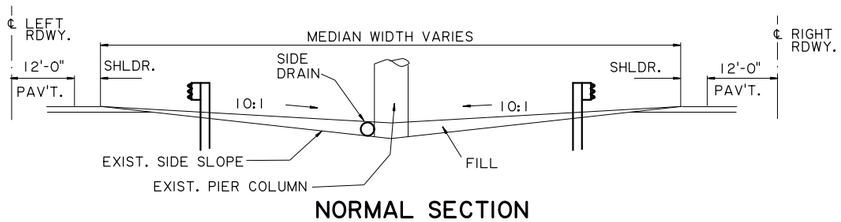

NORMAL SECTION

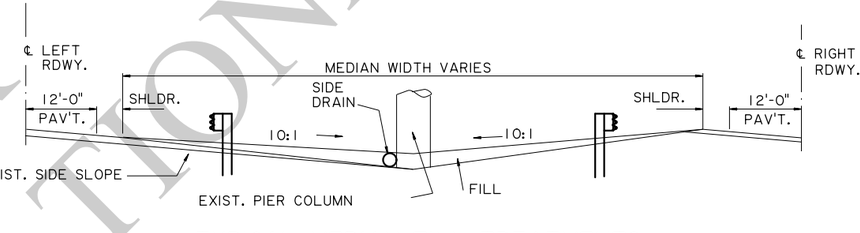

TYPICAL MEDIAN FILL TREATMENTS

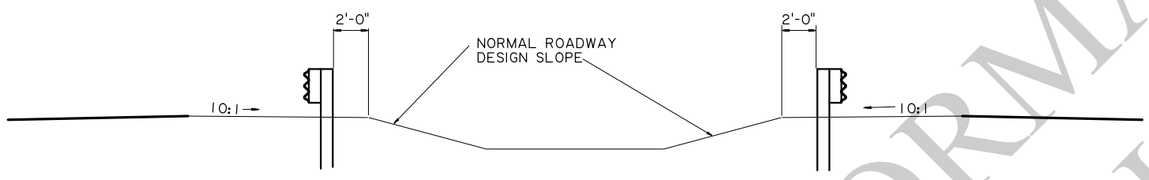

ALTERNATE MEDIAN TREATMENT

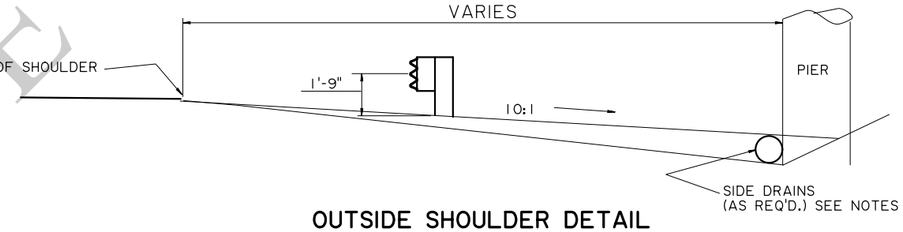

OUTSIDE SHOULDER DETAIL

NOTES

UNDER NO CIRCUMSTANCES SHALL THE MEDIAN OR SIDE SLOPE FILL INTERFERE WITH THE DRAINAGE. IF A CATCH BASIN FALLS WITHIN THE AREA OF NEW FILL, IT SHALL BE EXTENDED TO TOP OF THE NEW FILL TO ALLOW PROPER DRAINAGE. IF NECESSARY, PIPES MAY BE USED TO ACCOMMODATE SUBSURFACE DRAINAGE.

SLOPED CATCH BASIN, EXTENDING CATCH BASIN, SIDE DRAIN PIPE AND FILL TO BE PAID FOR UNDER THEIR RESPECTIVE PAY ITEMS.

THIS STANDARD PLAN SHALL BE USED IN CONJUNCTION WITH STANDARD PLAN GR-200.

FOR INFORMATIONAL USE

SHEET NUMBER

PARISH | CONTROL SECTION | STATE PROJECT

DESIGN | DETAIL: G. GRASS | REVIEW | SERIES # 4 OF 8

CHECK | CHECK: P. FOSSIER

APPROVED BY CHIEF ENGINEER: DATE: 6/29/2026

NO.	DATE	REVISION OR CHANGE ORDER DESCRIPTION	BY

HIGHWAY GUARD RAILS
DRAINAGE DETAILS

DOTD LOUISIANA DEPARTMENT OF TRANSPORTATION & DEVELOPMENT

STANDARD PLAN

6/23/2026 11:2

IP_PWP:d1274962\gr201-4.dgn

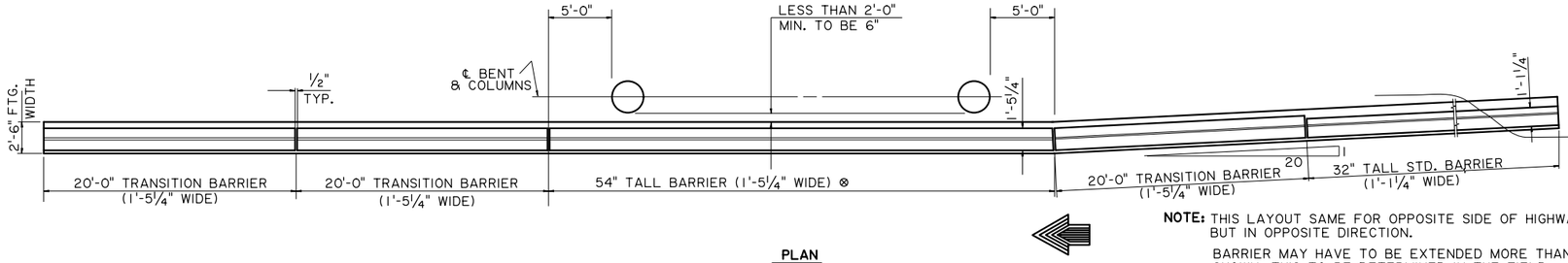

PLAN

NOTE: THIS LAYOUT SAME FOR OPPOSITE SIDE OF HIGHWAY BUT IN OPPOSITE DIRECTION.

BARRIER MAY HAVE TO BE EXTENDED MORE THAN SHOWN. THIS TO BE DETERMINED IN THE FIELD.

½" OPEN JOINTS SHALL BE AT 20'-0" MAX. CENTERS.

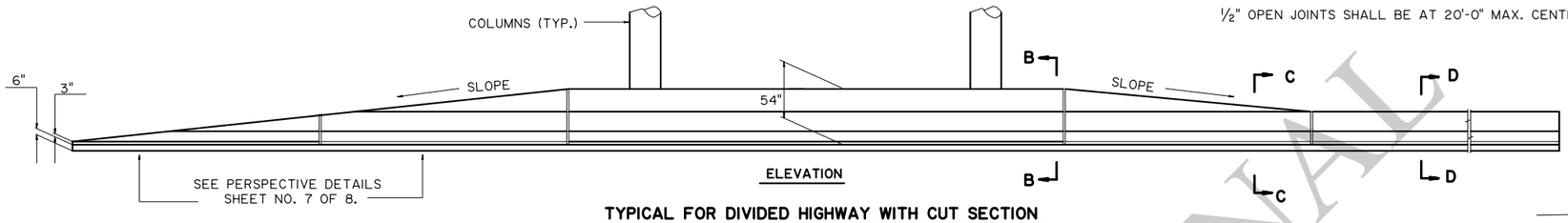

ELEVATION

TYPICAL FOR DIVIDED HIGHWAY WITH CUT SECTION

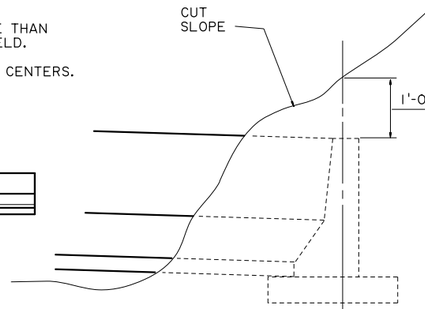

END VIEW

BURIED END OF BARRIER

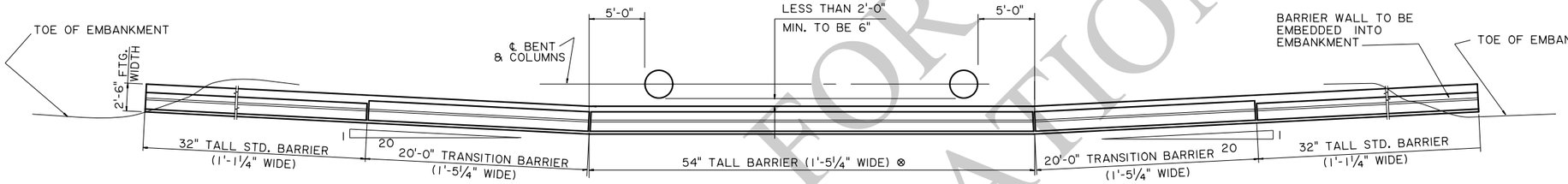

PLAN

NOTE: THIS LAYOUT SAME FOR OPPOSITE SIDE OF HIGHWAY.

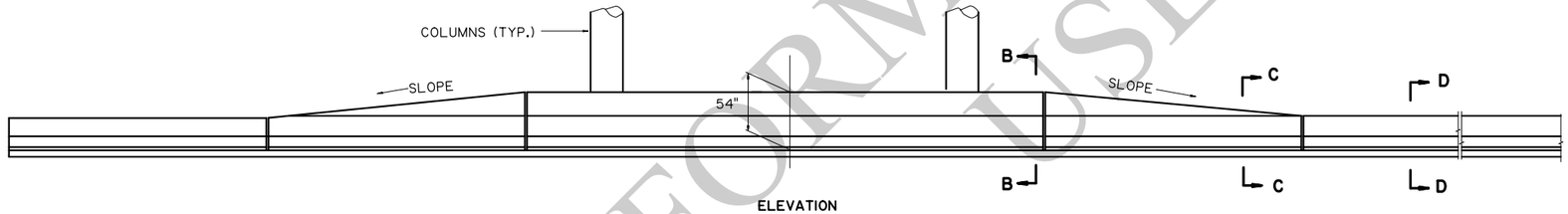

ELEVATION

TYPICAL FOR UNDIVIDED HIGHWAY WITH CUT SECTION

NOTES:

PIER PROTECTION SYSTEM, COMPLETE IN PLACE AND ACCEPTED, WILL BE PAID FOR AT THE CONTRACT PRICE PER EACH UNDER A SPECIAL ITEM (NS-800-00120).

THIS ITEM CONSIST OF FURNISHING AND CONSTRUCTING PIER PROTECTION SYSTEM AT THE LOCATIONS SHOWN ON THE PLANS, IN ACCORDANCE WITH PLAN DETAILS, STANDARD SPECIFICATIONS, AS AMENDED BY THE PROJECT SPECIFICATIONS AND THE FOLLOWING:

PIER PROTECTION SYSTEM CONSISTS OF CONCRETE BARRIER, CONCRETE FOOTING & REMOVAL OF EXISTING REVETMENT.

WHEN GUARD RAILS ARE CONNECTED TO THE CONCRETE BARRIER, THEY SHALL BE PAID FOR UNDER THEIR RESPECTIVE ITEMS.

FILL AND REVETMENT SHALL BE PAID FOR UNDER THEIR RESPECTIVE ITEMS.

SLOPES OF 10:1 OR FLATTER SHALL BE PLACED IN FRONT OF THE BARRIER.

FOR ADDITIONAL INFORMATION, & SECTIONS B-B, C-C, E-E SEE SHEET 7 & 8 OF 8. DETAILS ON THIS SHEET ARE FOR USE ON FREEWAYS ONLY.

THIS STANDARD PLAN SHALL BE USED IN CONJUNCTION WITH STANDARD PLAN GR-200.

⊗ LENGTH OF 54" BARRIER TO BE DETERMINED BY THE LENGTH OF THE OBJECT TO BE PROTECTED.

FOR INFORMATIONAL USE

SHEET NUMBER

PARISH | CONTROL SECTION | STATE PROJECT

DESIGN | CHECK | DETAIL: G. GRASS | CHECK: P. FOSSIER | REVIEW | SERIES # 5 OF 8

APPROVED BY CHIEF ENGINEER: DATE: 6/29/2026

REVISION OR CHANGE ORDER DESCRIPTION | BY | DATE | NO.

HIGHWAY GUARD RAILS
CUT SECTION
(LESS THAN 2'-0" CLEARANCE

GR-201

DOTD LOUISIANA DEPARTMENT OF TRANSPORTATION & DEVELOPMENT

STANDARD PLAN

09:5
6/23/2026
IP_PWP:d1274962\gr201-5.dgn

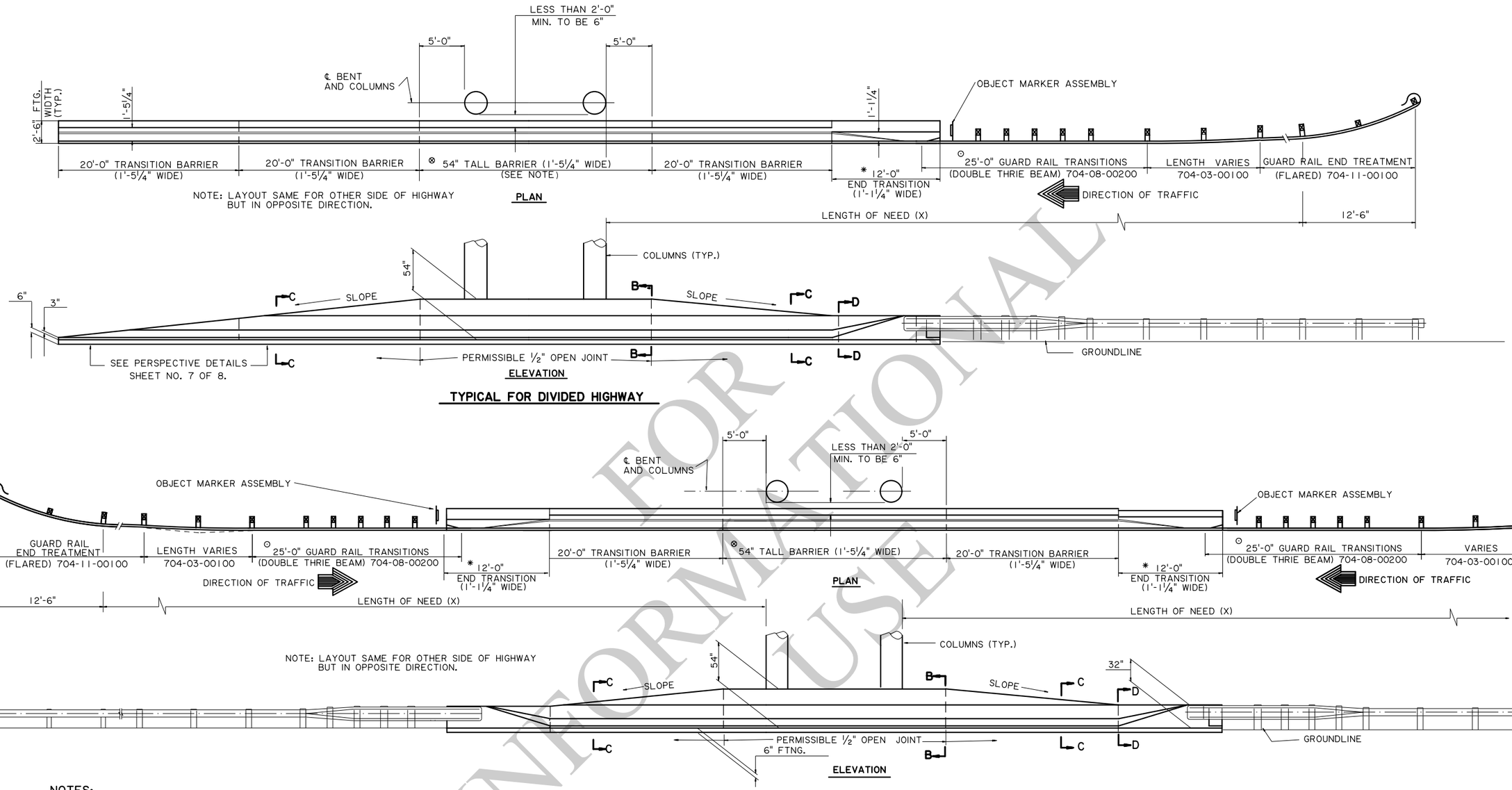

NOTES:

⊗ LENGTH OF 54" TALL BARRIER TO BE DETERMINED BY THE LENGTH OF THE OBJECT TO BE PROTECTED. REGARDLESS OF LENGTH OF NEED (X), A MINIMUM OF 75'-0" GUARD RAIL SHALL BE INSTALLED AT THE END OF CONCRETE BARRIER. WHEN MINIMUM GUARD RAIL IS USED, SEE NOTE 2, SHT. 1 OF GR-200.

FOR ADDITIONAL INFORMATION AND BARRIER RAIL DETAILS, SECTION B-B, C-C, D-D & E-E SEE SHEET 7 AND 8 OF 8.

THIS STANDARD PLAN SHALL BE USED IN CONJUNCTION WITH STANDARD PLAN GR-200.

* FOR BARRIER REINFORCING DETAILS OF 12'-0" TRANSITION & TAPER, SEE STANDARD DETAIL BR-01

⊙ 10' CURB REQUIRED, SEE SHT. 3, STD. PLAN GR-200 FOR DETAILS.

FUTURE OVERLAYS:

FOR FUTURE OVERLAY ON THE SHOULDER, WHERE IT MEETS THE PIER PROTECTION, THE OVERLAY SHALL PREFERABLY BE A MAXIMUM OF 3". THUS THE EFFECTIVE HEIGHT OF THE BARRIER AT 32" AND THE ATTACHED THRIE BEAM CAN BE LOWERED UP TO 3" WITHOUT FURTHER MODIFICATION TO THE HEIGHT OF THE BARRIER SYSTEM.

WHEN THE OVERLAY ON THE SHOULDER MUST EXCEED THE 3" MAXIMUM REQUIREMENT, MODIFY THE APPROACH SECTION OF THE PIER PROTECTION SYSTEM AT SECTION D-D TO WHICH THE THRIE BEAM CONNECTS, BY RAISING IT TO A HEIGHT EQUAL TO THE DEPTH OF THE REQUIRED OVERLAY. THIS WOULD ALSO REQUIRE THE GUARDRAIL TO BE RAISED BY AN EQUAL AMOUNT.

FOR INFORMATIONAL USE

SHEET NUMBER

PARISH | CONTROL SECTION | STATE PROJECT

DESIGN | CHECK | DETAIL: G. GRASS | CHECK: P. FOSSIER | REVIEW | SERIES # 6 OF 8

APPROVED BY CHIEF ENGINEER: DATE: 6/29/2026

NO.	DATE	REVISION OR CHANGE ORDER DESCRIPTION	BY

STATE OF LOUISIANA DEPARTMENT OF TRANSPORTATION & DEVELOPMENT

DOTD LOUISIANA DEPARTMENT OF TRANSPORTATION & DEVELOPMENT

STANDARD PLAN

HIGHWAY GUARD RAILS FILL SECTION (LESS THAN 2'-0" CLEARANCE)

GR-201

09:4
6/23/2026
IP_PWP:d1274962\gr201-6.dgn

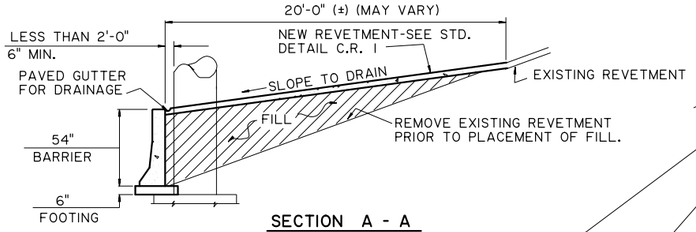

SECTION A - A

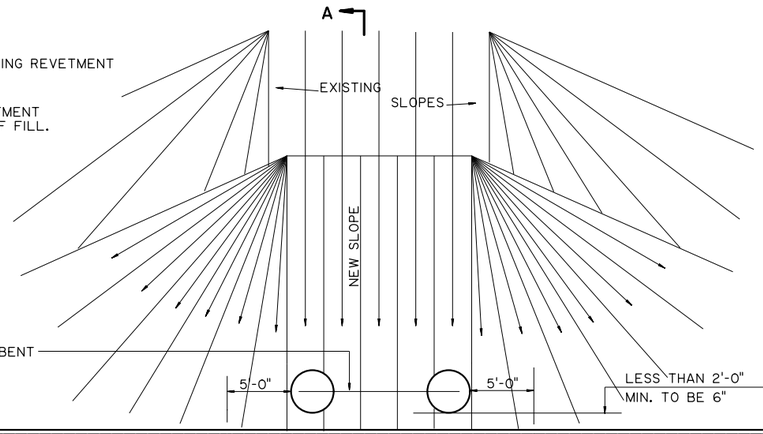

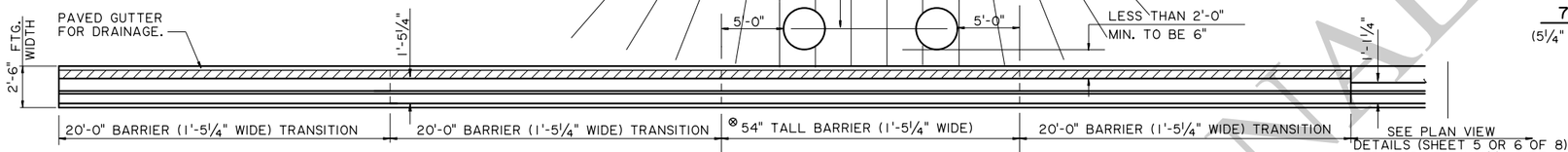

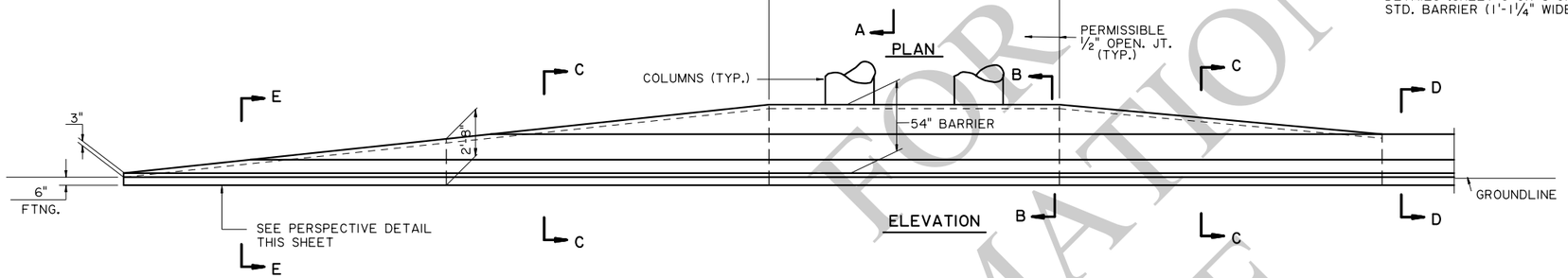

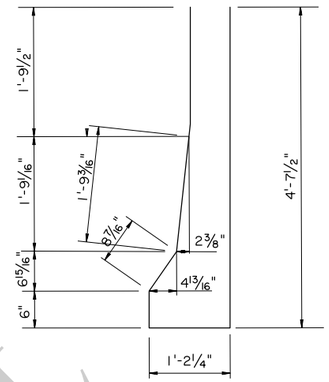

701
(5¼" Φ PIN)

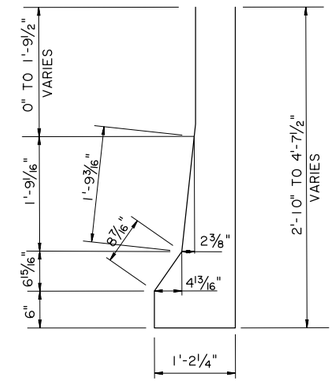

⊕ 702
(5¼" Φ PIN)

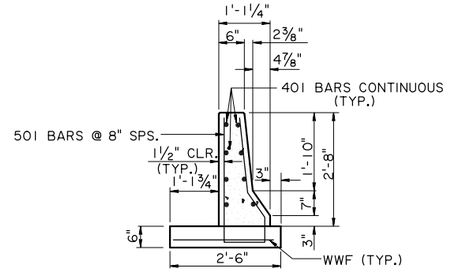

⊙ SECTION D-D @ 2'-8" STANDARD BARRIER

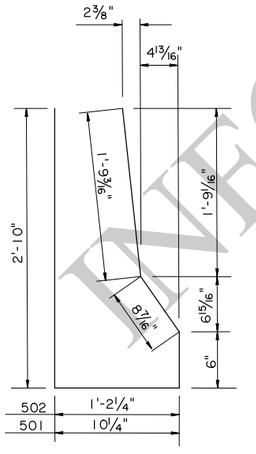

501 & 502 ⊕
(2½" Φ PIN)
(502 BAR DIMENSIONS VARY)

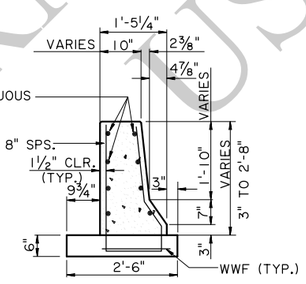

SECTION E-E @ TRANSITION
(2'-8" TO 0'-3")

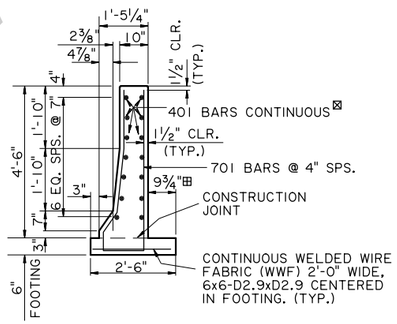

SECTION B-B 4'-6" BARRIER

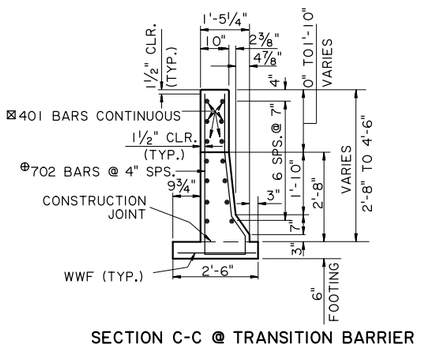

SECTION C-C @ TRANSITION BARRIER
(2'-8" TO 4'-6")

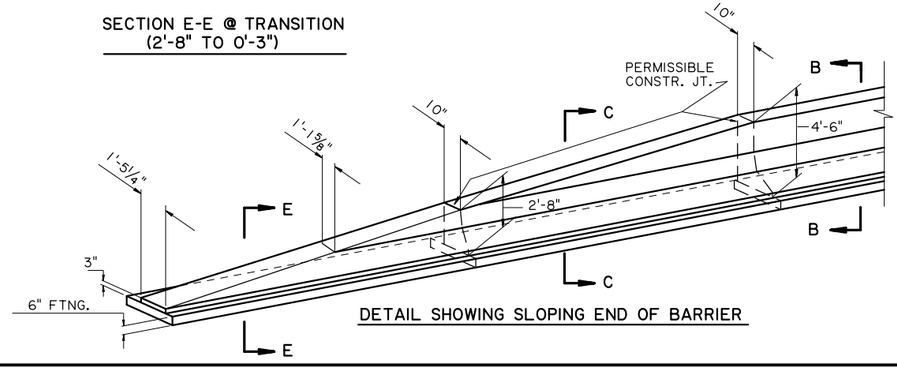

DETAIL SHOWING SLOPING END OF BARRIER

NOTES

EXISTING SLOPE SHOWN IS FOR ILLUSTRATION ONLY. (SLOPES VARY AT EACH LOCATION)

⊗ LENGTH OF 54" TALL BARRIER TO BE DETERMINED BY THE LENGTH OF THE OBJECT TO BE PROTECTED.

½" OPEN JOINTS TO BE AT 20'-0" MAX. CTRS.

TRAILING END SHOWN IS FOR USE WITH THE FILL SECTIONS.

FOR TRAILING END ON CUT SECTIONS SEE SHEET 5 OF 8.

SEE SHEET 5 OF 8 FOR OTHER PIER PROTECTION SYSTEM NOTES.

REINFORCING STEEL BAR DETAILS THAT ARE SHOWN ARE FOR FABRICATION. STRAIGHT REBAR DETAILS NOT SHOWN, ONLY THE SIZE IS SHOWN IN THE SECTIONS.

⊕ THESE REINFORCING STEEL BAR DIMENSIONS VARY AND SHALL BE ADJUSTED AND FABRICATED TO FIT IN THE TRANSITION AREA.

THIS STANDARD PLAN SHALL BE USED IN CONJUNCTION WITH STANDARD PLAN GR-200.

⊙ SEE STANDARD DETAIL BR-01 FOR FURTHER STANDARD BARRIER & REINFORCING DETAIL INFORMATION.

⊠ 401 BARS WILL TERMINATE IN TRANSITION SECTION WITH 1½" REQUIRED BAR CLEARANCE.

⊞ FOOTING WIDTH MAY BE ADJUSTED TO 6" TO FIT AROUND COLUMN INTERFERENCE WHEN NEEDED. ADJUSTMENTS TO BE MADE AT NO ADDITIONAL COST. ANY REVISED DETAILS TO BE APPROVED BY THE ENGINEER

FOR INFORMATIONAL PURPOSES ONLY

SHEET NUMBER

PARISH | CONTROL SECTION | STATE PROJECT

DESIGN | DETAIL: G. GRASS | REVIEW | SERIES # 7 OF 8
CHECK | CHECK: P. FOSSIER

APPROVED BY CHIEF ENGINEER: DATE: 6/29/2026

REVISION OR CHANGE ORDER DESCRIPTION | BY | DATE | NO.

STATE OF LOUISIANA DEPARTMENT OF TRANSPORTATION AND DEVELOPMENT

HIGHWAY GUARD RAILS BACKFILL SUPPORTED BARRIER

CUT & FILL SECTION

GR-201

DOTD LOUISIANA DEPARTMENT OF TRANSPORTATION & DEVELOPMENT

STANDARD PLAN

IP_PWP:d1274962\gr201-7.dgn
6/23/2026 12:0

6/23/2026 08:4

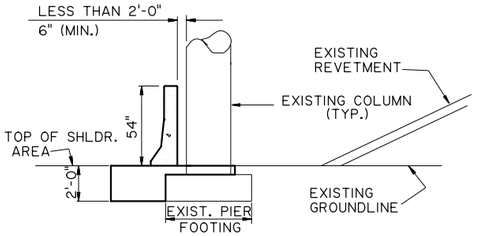

NEW BARRIER FOOTING SHALL BE COPED TO FIT THE EXIST. PIER FOOTING

SECTION A - A

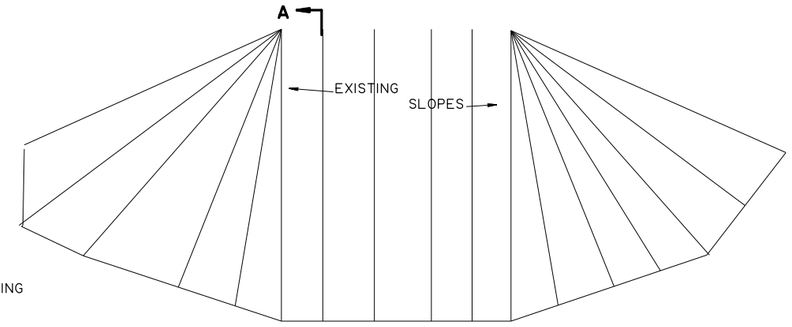

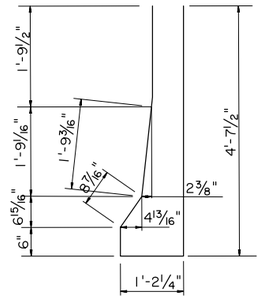

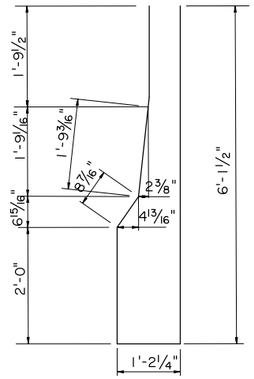

703
(5¼" ϕ PIN)

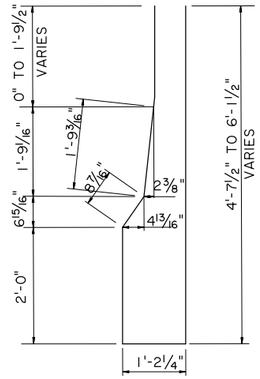

⊕ 705
(5¼" ϕ PIN)

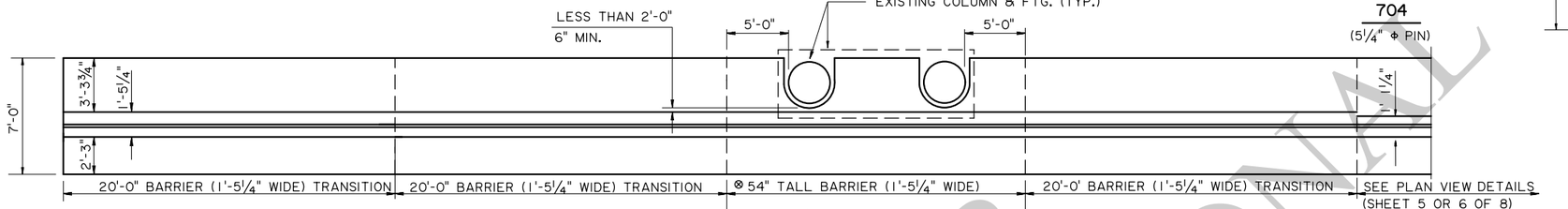

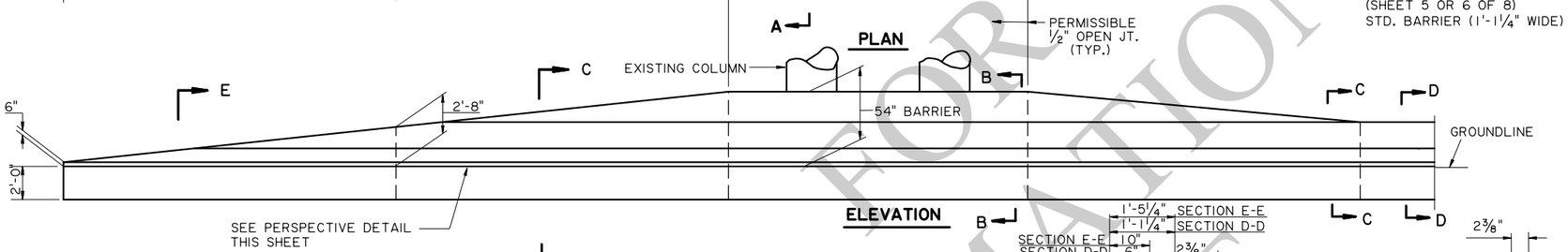

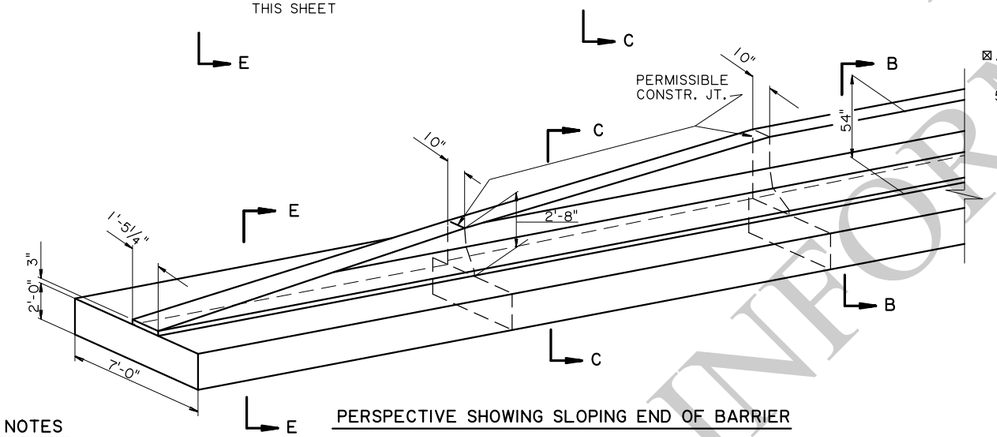

PERSPECTIVE SHOWING SLOPING END OF BARRIER

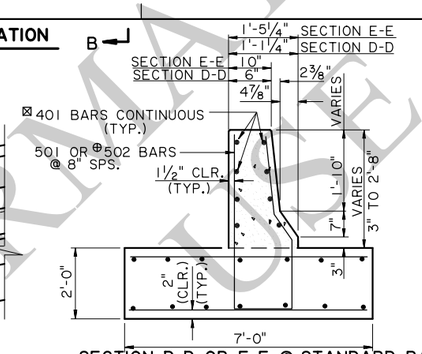

SECTION D-D OR E-E @ STANDARD BARRIER OR TRANSITION (2'-8" TO 0'-3")

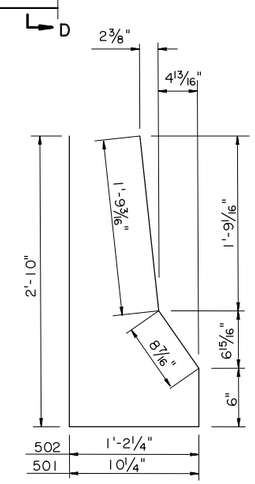

501 & 502 ⊕
(2½" ϕ PIN)
(502 BAR DIMENSIONS VARY)

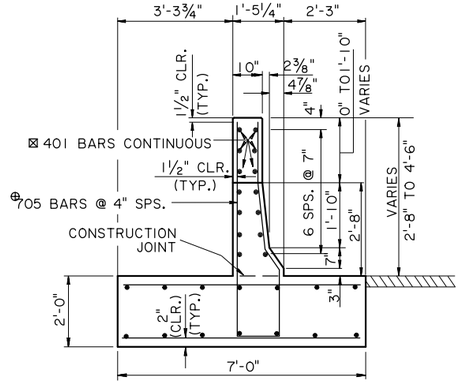

SECTION C-C @ TRANSITION BARRIER (2'-8" TO 4'-6")

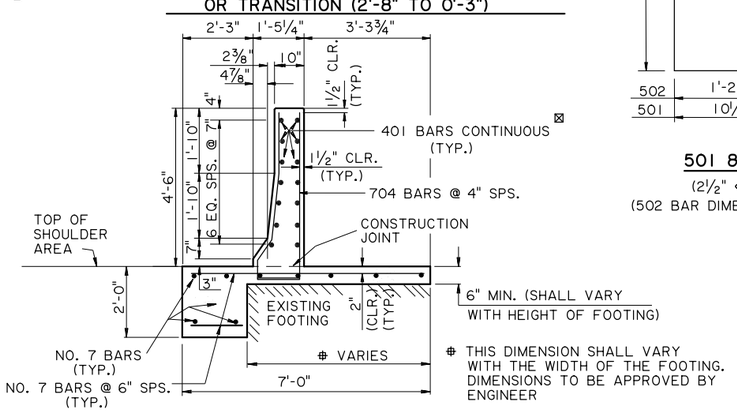

BARRIER RAILING SECTION AT EXISTING COLUMN & FOOTING

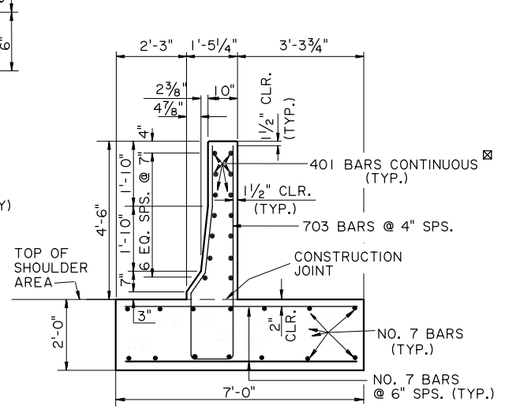

SECTION B-B @ 4'-6" BARRIER

NOTES

EXISTING SLOPE SHOWN IS FOR ILLUSTRATION ONLY. (SLOPES VARY AT EACH LOCATION)

⊗ LENGTH OF 54" TALL BARRIER TO BE DETERMINED BY THE LENGTH OF THE OBJECT TO BE PROTECTED

½" OPEN JOINTS TO BE AT 20'-0" MAX. CTRS.

TRAILING END SHOWN IS FOR USE WITH THE FILL SECTIONS.

FOR TRAILING END ON CUT SECTIONS SEE SHEET 5 OF 8.

SEE SHEET 5 OF 8 FOR OTHER PIER PROTECTION SYSTEM NOTES.

REINFORCING STEEL BAR DETAILS THAT ARE SHOWN ARE FOR FABRICATION. STRAIGHT REBAR DETAILS NOT SHOWN AND ONLY THE SIZE IS SHOWN IN THE SECTIONS.

⊕ THESE REBAR DIMENSIONS VARY AND SHALL BE ADJUSTED & FABRICATED TO FIT IN THE TRANSITION AREA.

THIS STANDARD PLAN SHALL BE USED IN CONJUNCTION WITH STANDARD PLAN GR-200

SEE STANDARD DETAIL BR-01 FOR FURTHER STD. BARRIER AND REINFORCING DETAIL INFORMATION.

⊠ 401 BAR WILL TERMINATE IN TRANSITION SECTION WITH 1½" REQUIRED BAR CLEARANCE

FOR INFORMATIONAL USE

SHEET NUMBER

PARISH | CONTROL SECTION | STATE PROJECT

DESIGN | DETAIL: G. GRASS | CHECK | CHECK: P. FOSSIER | REVIEW | SERIES # 8 OF 8

APPROVED BY CHIEF ENGINEER: DATE: 6/29/2026

REVISION OR CHANGE ORDER DESCRIPTION | BY | DATE | NO.

PIER PROTECTION SYSTEM
SELF-SUPPORTING BARRIER
(CUT & FILL SECTION)

GR-201

DOTD LOUISIANA DEPARTMENT OF TRANSPORTATION & DEVELOPMENT

STANDARD PLAN

IP_PWP:d1274962\gr201-8.dgn

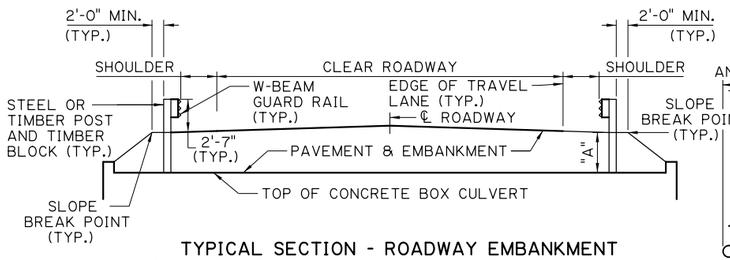

TYPICAL SECTION - ROADWAY EMBANKMENT OVER BOX CULVERT WITH STEEL OR WOOD POST

("A" = > 3'-4")
N.T.S.

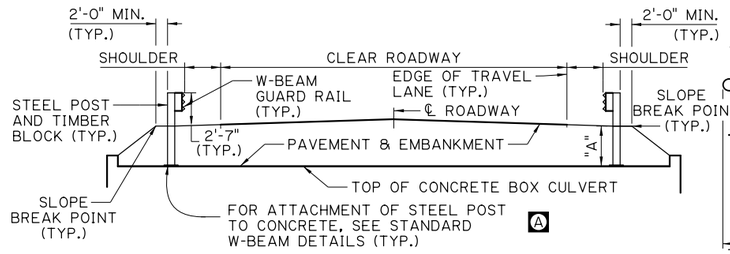

TYPICAL SECTION - ROADWAY EMBANKMENT OVER BOX CULVERT WITH STEEL POST ATTACHMENT

("A" = < 3'-4", "A" = MIN. 9")
N.T.S.

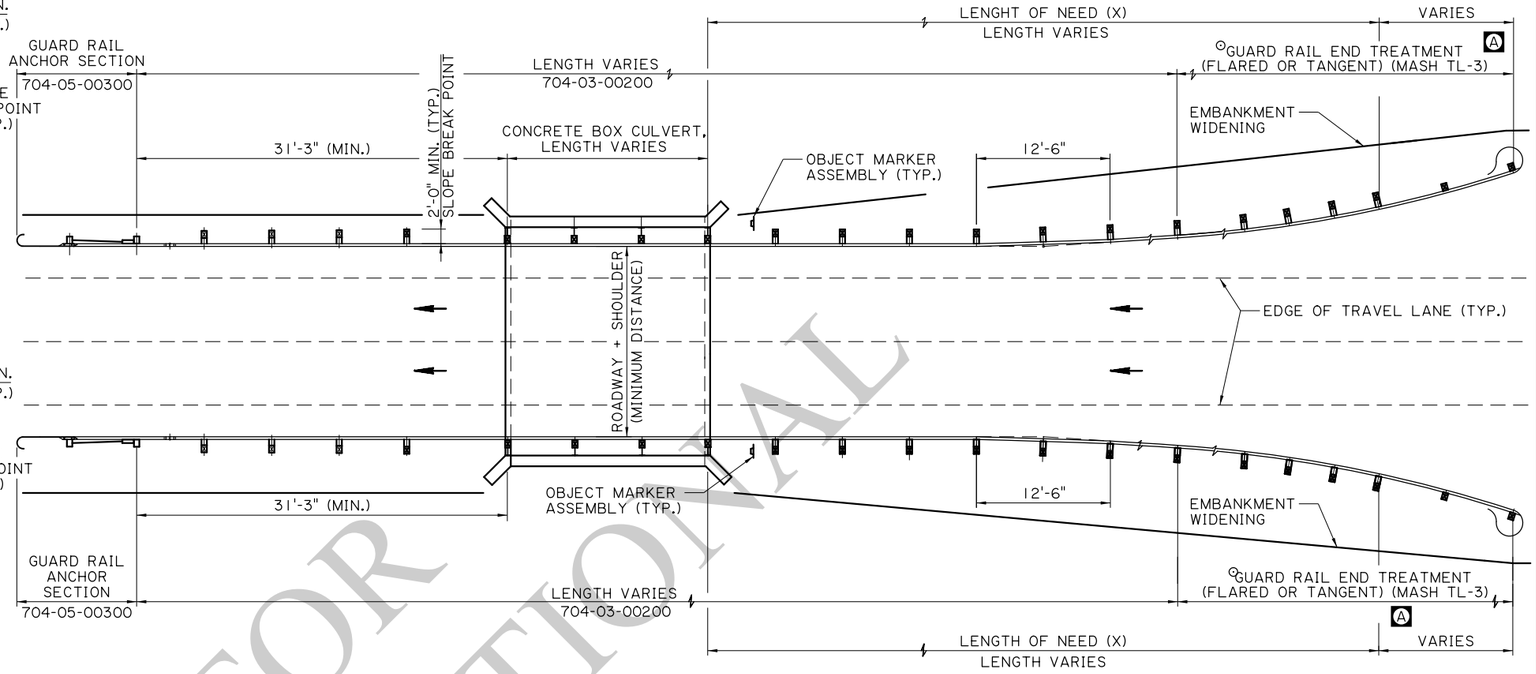

GUARD RAIL LAYOUT OVER CONCRETE BOX CULVERTS - DIVIDED HIGHWAY

HALF PLAN FOR DIVIDED HIGHWAY (LAYOUT SAME FOR OPPOSITE SIDE OF RDWY.)
N.T.S.

NOTES: A

1. LENGTH OF NEED (X) AND PLAN LAYOUT DETAILS ARE TO BE DETERMINED FOR EACH BOX CULVERT AT EACH SPECIFIC SITE.
2. ⊙ FLARED OR TANGENT END TREATMENTS MAY BE USED.
3. IN ADDITION TO THESE DETAILS, GUARD RAIL LAYOUT AND EMBANKMENT WIDENING DETAILS ARE REQUIRED FOR EACH BOX CULVERT SITE. SEE OTHER PLAN DETAILS.
4. FOR ALL OTHER DETAILS, REFERENCE COMMON DETAILS, STANDARD W-BEAM DETAILS, NON-BRIDGE APPLICATION DETAILS, AND TRAILING END DETAILS.

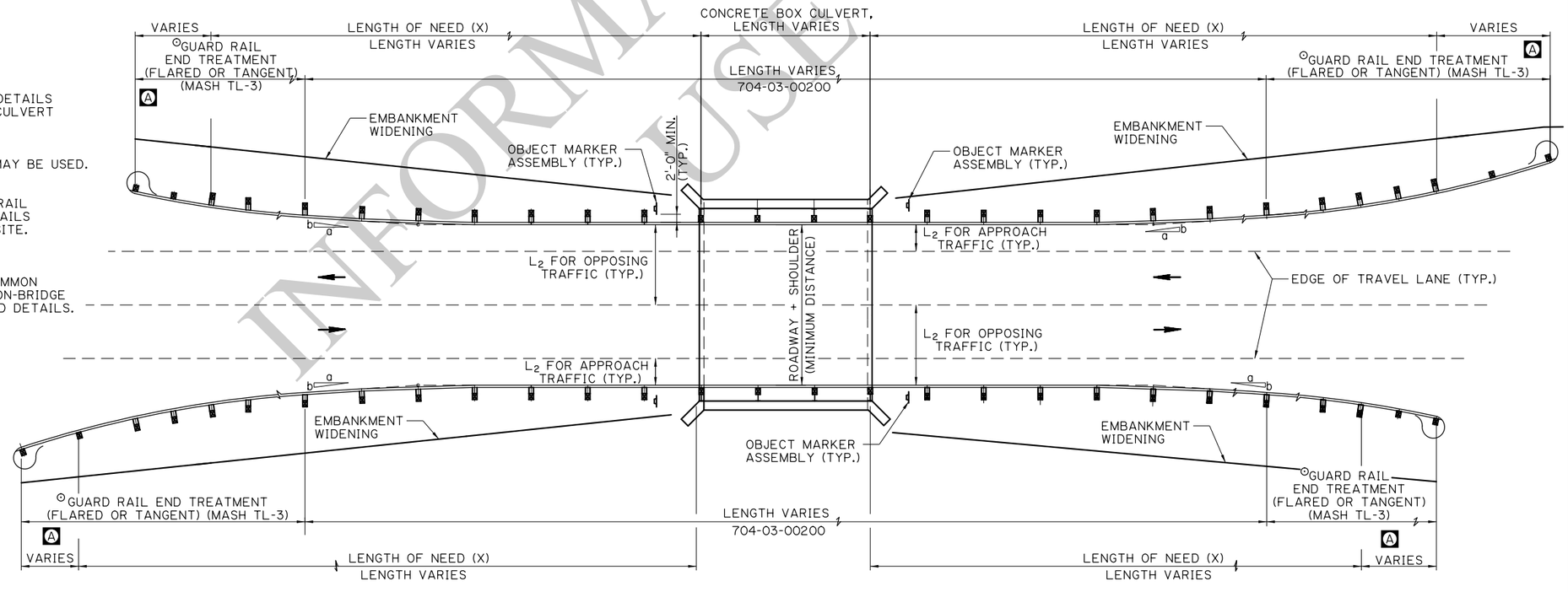

GUARD RAIL LAYOUT OVER CONCRETE BOX CULVERTS - UNDIVIDED HIGHWAY

N.T.S.

FOR INFORMATIONAL USE

SHEET NUMBER

PARISH	CONTROL SECTION	STATE PROJECT

DESIGN C. GAUDRY | DETAIL C. GAUDRY | REVIEW | SERIES # 1 OF 1
CHECK | CHECK

APPROVED BY CHIEF ENGINEER: DATE: 6/29/2026

NO.	DATE	REVISION OR CHANGE ORDER DESCRIPTION	BY
A	2/23/25	REFERENCE UPDATES	CMG

STATE OF LOUISIANA DEPARTMENT OF TRANSPORTATION AND DEVELOPMENT

HIGHWAY GUARD RAIL (MASH) APPLICATION FOR BOX CULVERT

GR-MASH-BC

DOTD LOUISIANA DEPARTMENT OF TRANSPORTATION & DEVELOPMENT

STANDARD PLAN

6/8/2026 14:5

IP_PWP:d1273647\GR-MASH-BC.dgn

6/9/2026 14:4

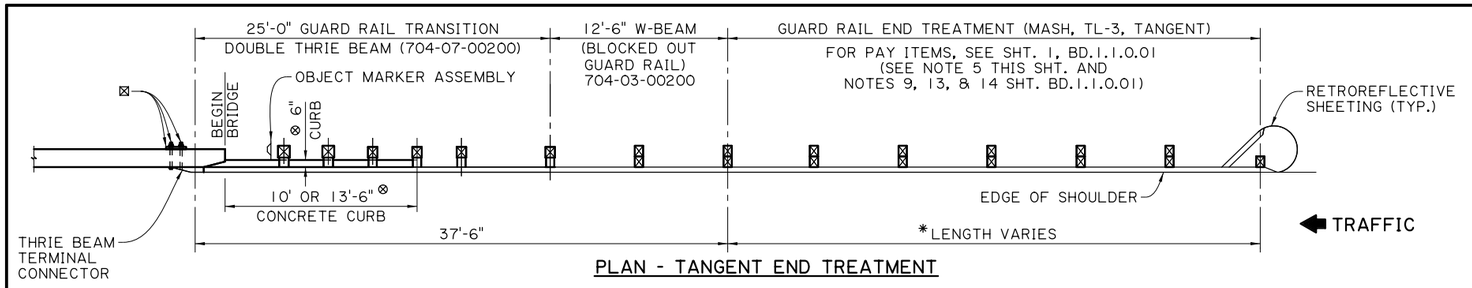

PLAN - TANGENT END TREATMENT

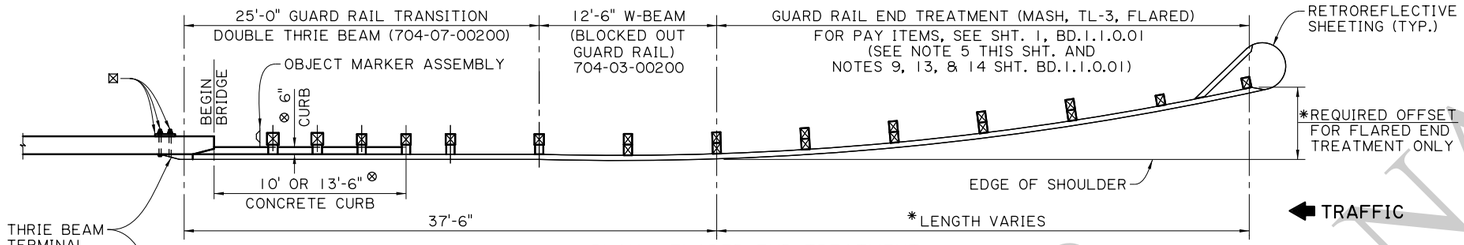

PLAN - FLARED END TREATMENT

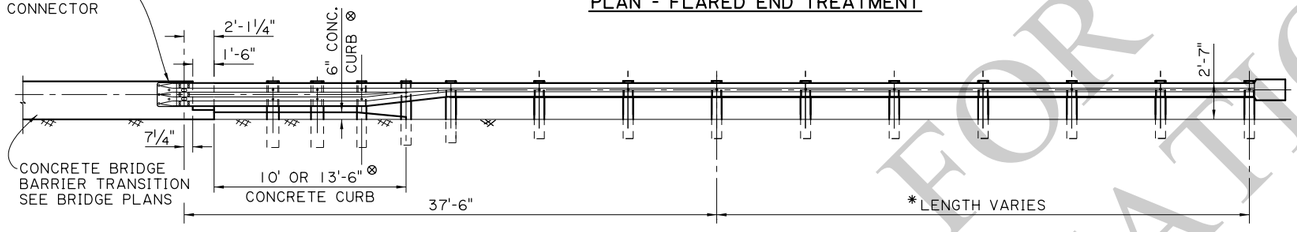

⊠ ⅞" ø H.S. HEX. BOLTS WITH ⅝" BEARING PLATE
(SEE STANDARD PLAN BD.1.1.0.09).

ELEVATION
(NOT TO SCALE)

NOTES

1) FOR ADDITIONAL GUARD RAIL DETAILS AND INFORMATION, SEE STANDARD PLAN BD.1.1.0.01 THRU BD.1.1.0.11.

2) FOR CONCRETE BRIDGE BARRIER TRANSITION DETAILS, SEE BRIDGE PLANS.

3) OBJECT MARKERS (TYPE 3) SHALL BE PAID UNDER ITEM 729-16-00300.

4) THE QUANTITY FOR THE EMBANKMENT WIDENING AT BRIDGE ENDS SHALL BE INCLUDED IN THE EMBANKMENT QUANTITY FOR THE ROADWAY.

* 5) USE REQUIRED OFFSET AS PER GUARD RAIL FLARED END TREATMENT REQUIREMENTS. SEE DOTD APPROVED MATERIALS LIST (AML) FOR GUARD RAIL END TREATMENTS (MASH). LENGTH VARIES BASED ON END TREATMENT TYPE USED.

⊗ 6) USE 10'-0" LONG CONCRETE CURB AND 6" CURB HEIGHT FOR 10' APPROACH SLAB, SEE APPROACH SLAB DETAILS FOR FURTHER INFORMATION.

USE 13'-6" LONG CONCRETE CURB FOR ≥ 20' APPROACH SLAB, CURB HEIGHT VARIES FROM 6" TO 2", SEE APPROACH SLAB DETAILS FOR FURTHER INFORMATION.

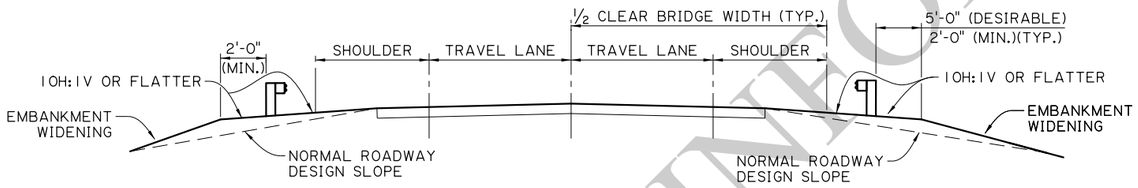

TYPICAL CROSS SECTION EMBANKMENT WIDENING
(NOT TO SCALE)

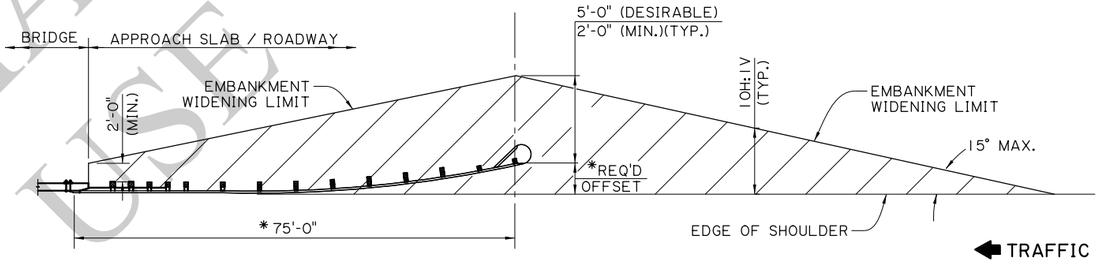

TYPICAL PLAN FOR EMBANKMENT WIDENING - FLARED END TREATMENT
(TYPICAL FOR EACH END OF BRIDGE)
(NOT TO SCALE)

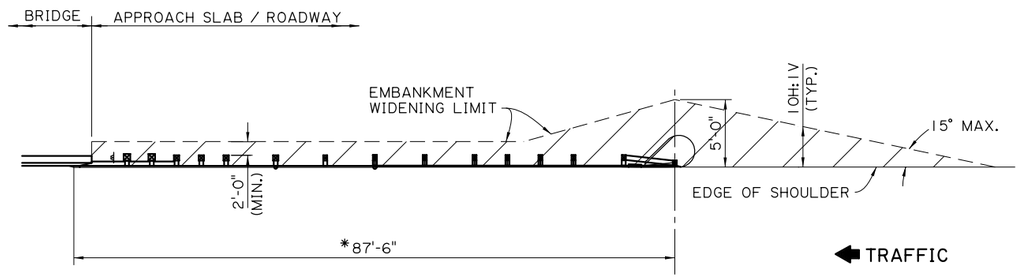

TYPICAL PLAN FOR EMBANKMENT WIDENING -TANGENT END TREATMENT
(TYPICAL FOR EACH END OF BRIDGE)
(NOT TO SCALE)

FOR INFORMATIONAL USE

SHEET NUMBER

PARISH	CONTROL SECTION	STATE PROJECT

DESIGN	P. FOSSIER	DETAIL	J. DOUCET	REVIEW	C. GUIDRY
CHECK	K. BRAUNER	CHECK	K. BRAUNER	SERIES	1 OF 1

APPROVED BY CHIEF ENGINEER: DATE: 6/29/2026

NO.	DATE	REVISION OR CHANGE ORDER DESCRIPTION	BY

HIGHWAY GUARD RAIL (MASH)
OFF-SYSTEM BRIDGE APPLICATION

GR-MASH-OFF

DOTD LOUISIANA DEPARTMENT OF TRANSPORTATION & DEVELOPMENT

STANDARD PLAN

IP_PWP:d1273830\GR-MASH-OFF 1.dgn

10:1
6/17/2026

GUARD RAIL GENERAL NOTES:

1. DESIGN REFERENCE: THE LATEST EDITIONS OF THE AASHTO ROADSIDE DESIGN GUIDE (RDG) AND THE LADOTD BRIDGE DESIGN AND EVALUATION MANUAL (BDEM), PART II, VOLUME 4 - HIGHWAY SAFETY.

2. GUARD RAIL LENGTH: TOTAL GUARD RAIL LENGTH AND LENGTH OF NEED SHALL BE BASED ON THE LATEST AASHTO ROADSIDE DESIGN GUIDE LENGTH OF NEED REQUIREMENTS. TOTAL LENGTH OF GUARD RAIL SHALL NOT BE LESS THAN 75'-0" BASED ON A LENGTH OF LENGTH OF NEED OF X=62'-6". A DESIGN WAIVER IS REQUIRED FOR GUARD RAIL LENGTHS NOT MEETING THESE REQUIREMENTS.

3. FOR BRIDGES WITH GUARD RAILS IN URBAN AREAS WITH A DESIGN SPEED OF 45 MPH OR LESS, SEE DOTD EDSM NO. II.3.1.4 FOR DESIGN INFORMATION.

4. FOR GUARD RAIL ON EXISTING HIGHWAYS, SEE DOTD EDSM NO. II.3.1.3 FOR DESIGN INFORMATION.

5. EMBANKMENT WIDENING IS TO PROVIDE SLOPES NOT STEEPER THAN 10H:1V IN FRONT OF THE GUARD RAIL.

6. ALL GUARD RAIL COMPONENTS SHALL BE IN ACCORDANCE WITH THE PROJECT SPECIFIC PLAN LAYOUT DETAILS, GUARD RAIL DESIGN DATA, PAY ITEMS, AND QUANTITY TABLES PROVIDED IN THE PROJECT PLANS.

7. LONGITUDINAL DIMENSIONS FOR GUARD RAIL ARE MEASURED ALONG THE PROJECTED FACE OF RAILING.

8. THE QUANTITY FOR THE EMBANKMENT WIDENING IS TO BE INCLUDED IN THE EMBANKMENT PAY ITEM QUANTITY FOR THE ROADWAY.

9. A TANGENT END TREATMENT MAY BE USED AS AN ALTERNATE TO THE FLARED END TREATMENT. A ZERO FLARE RATE (b/a=0) IS REQUIRED WHEN THE TANGENT END TREATMENT IS USED AND THE LENGTH OF NEED "X" SHALL BE CALCULATED BASED ON A "ZERO" FLARE RATE.

10. THE POINT WITHIN THE GUARD RAIL END TREATMENT WHERE THE LENGTH OF NEED TERMINATES MAY VARY WITH EACH TYPE OF GUARD RAIL END TREATMENT. THE 12'-6" LENGTH APPLIES TO MOST END TREATMENTS.

11. RETROREFLECTIVE ADHESIVE SHEETING (12" X 2'-8")(TYPE III HIGH INTENSITY OBJECT MARKER PATTERN) SHALL BE APPLIED TO THE END TREATMENT NOSE. SEE THE LATEST LA. STANDARD SPECS. FOR ROADS AND BRIDGES FOR SPECIFICATIONS AND THE SHEETING MANUFACTURER'S RECOMMENDATIONS FOR INSTALLATION. FOR PATTERN DETAIL, SEE OBJECT MARKER STANDARD PLANS.

12. GUARD RAIL INSTALLATIONS MAY BE PAVED BY USING CONCRETE PAVING OR ASPHALT CONCRETE. THE INCIDENTAL CONCRETE OR ASPHALT WILL BE USED IF A LAYOUT DETAIL, PAY ITEM, AND QUANTITY IS INDICATED IN THE PLANS. SEE SHEET 11 FOR REQUIRED POST DETAILS WHEN PAVING IS USED AROUND POSTS.

⊙13. GUARD RAIL END TREATMENTS SHALL BE SELECTED FROM THE DOTD APPROVED MATERIALS LIST (AML), AND SHALL BE AASHTO MASH, TEST LEVEL 3 (TL-3) UNLESS OTHERWISE NOTED IN THE PLANS. IF TEST LEVEL 2 (TL-2) GUARD RAIL END TREATMENTS ARE USED, A DESIGN WAIVER SHALL BE REQUIRED. IF MASH FLARED END TREATMENTS ARE NOT AVAILABLE, USE GUARD RAIL END TREATMENT, NCHRP 350 - 31" (TL-3 FLARED), WITH APPROVAL OF PROJECT ENGINEER.

⊕14. FLARED GUARD RAIL END TREATMENTS (12'-6" OR 18'-9"), (PAY ITEMS 704-10-00105 AND 704-10-00110) ARE GENERIC TEST LEVEL 2 (TL-2) NCHRP 350 SYSTEMS THAT CAN ONLY BE USED WITH PERMISSION FROM THE BRIDGE DESIGN ENGINEER ADMINISTRATOR AND AN APPROVED DESIGN WAIVER. SEE BRIDGE DESIGN SPECIAL DETAILS FOR THESE END TREATMENT DETAILS.

15. GUARD RAIL DESIGN VARIABLES FOR STANDARD PLAN SHEETS:

L_1 = LENGTH OF TANGENT SECTION OF RAIL IN ADVANCE OF OBJECT. (FT)

L_2 = DISTANCE FROM EDGE OF TRAVEL LANE TO TANGENT SECTION OF RAIL. (FT)

L_3 = DISTANCE FROM EDGE OF TRAVEL LANE TO OBJECT OF CONCERN.

L_R = RUNOUT LENGTH (FT)

L_C = REQUIRED CLEAR ZONE (FT)

L_A = DISTANCE FROM THE EDGE OF THE TRAVEL LANE TO THE LATERAL EXTENT OF THE OBJECT. (FT)

L_A = L_C FOR BRIDGE APPLICATIONS

X = CALCULATED LENGTH OF NEED (FT)

Y = DISTANCE FROM EDGE OF THE TRAVEL LANE TO THE BEGINNING OF THE LENGTH OF NEED.

Z = DISTANCE FROM EDGE OF THE TRAVEL LANE TO THE EDGE OF EMBANKMENT.

b/a = FLARE RATE (VERTICAL/HORIZONTAL)

FOR CLEAR ZONE, RUNOUT, FLARE RATE, SHYLINE, AND HORIZONTAL CURVE ADJUSTMENTS, SEE LATEST AASHTO ROADSIDE DESIGN GUIDE AND THE DOTD BRIDGE DESIGN AND EVALUATION MANUAL.

16. STEEL POSTS MAY BE USED AS AN ALTERNATE TO WOOD POSTS, UNLESS SHOWN OTHERWISE.

17. INTERMIXING OF STEEL AND WOOD POSTS IN ANY ONE SECTION OF THE GUARD RAIL SHALL NOT BE PERMITTED.

18. ALL MATERIAL DIMENSIONS ARE SUBJECT TO MANUFACTURING TOLERANCES.

19. GUARD RAIL HEIGHT TOLERANCE ALLOWED FOR INSTALLATION IS 1 INCH ABOVE AND 0.5 INCH BELOW THE SPECIFIED HEIGHT.

20. GUARD RAIL TRAILING END ANCHORAGE SHALL BE USED TO ANCHOR DOWNSTREAM END OF GUARD RAIL ONLY WHEN TYPICAL GUARD RAIL END TREATMENTS ARE NOT REQUIRED.

21. STANDARD COMPONENTS: STANDARD GUARD RAIL COMPONENTS, INCLUDING POSTS, PANELS, AND BOLT SYSTEM ARE BASED UPON ENGLISH UNIT CONVERSIONS OF THE AASHTO-AGC-ARTBA JOINT COMMITTEE TASK FORCE 13 REPORT: A GUIDE TO STANDARDIZED HIGHWAY BARRIER HARDWARE.

*22. IF OFF-SYSTEM BRIDGE OR BOX CULVERT DETAILS ARE USED, THE PLANS MUST ALSO INCLUDE THE COMMON DETAILS (SHTS. 1-11).

GUARD RAIL AND RELATED PAY ITEMS :

	202-02-14500	REMOVAL OF GUARD RAIL, (LN FT)
	704-01-01000	GUARD RAIL (SINGLE THRIE BEAM) (3'-1½" POST SPACING), (LN FT)
	704-01-01020	GUARD RAIL (SINGLE THRIE BEAM) (6'-3" POST SPACING), (LN FT)
	704-01-02000	GUARD RAIL (DOUBLE THRIE BEAM) (3'-1½" POST SPACING), (LN FT)
	704-01-02020	GUARD RAIL (DOUBLE THRIE BEAM) (6'-3" POST SPACING), (LN FT)
	704-03-00200	BLOCKED OUT GUARD RAIL - 31", (6'-3" POST SPACING), (LN FT)
	704-04-00200	BLOCKED OUT GUARD RAIL - 31", (DOUBLE FACED, 6'-3" POST SPACING), (LN FT)
	704-05-00300	GUARD RAIL ANCHOR SECTIONS - 31", (TRAILING END), (LN FT)
	704-06-00100	GUARD RAIL BRIDGE ATTACHMENTS, (LN FT)
	704-06-00200	GUARD RAIL BRIDGE ATTACHMENTS (SINGLE THRIE BEAM), (LN FT)
	704-07-00200	GUARD RAIL TRANSITION, (DOUBLE THRIE BEAM), (LN FT)
	704-09-00100	GUARD RAIL ANCHOR BLOCK, (EA.)
⊕	704-10-00105	GUARD RAIL END TREATMENT (FLARED, 12'-6" LENGTH), (EA.)
⊕	704-10-00110	GUARD RAIL END TREATMENT (FLARED, 18'-9" LENGTH), (EA.)
⊙	704-10-00120	GUARD RAIL END TREATMENT, MASH, (TL-3 FLARED), (EA.)
⊙	704-10-00204	GUARD RAIL END TREATMENT, MASH, (TL-2 TANGENT), (EA.)
⊙	704-10-00205	GUARD RAIL END TREATMENT, MASH, (TL-3 TANGENT), (EA.)
⊙	704-10-00305	GUARD RAIL END TREATMENT, MASH, (TL-3 BI-DIRECTIONAL), (EA.)
⊙	704-10-00310	GUARD RAIL END TREATMENT, NCHRP 350 - 31" (TL-3 FLARED), (EA.)
	810-06-00100	CONCRETE PIER PROTECTION SYSTEM (VEHICLE), (LN FT)

⊙ SEE NOTE NO.13

⊕ SEE NOTE NO.14

GUARD RAIL STANDARD PLAN INDEX

		SERIES	DESCRIPTION
	COMMON DETAILS	1 OF 11	GENERAL NOTES, PAY ITEMS, STANDARD PLAN INDEX
		2 OF 11	BRIDGE APPLICATION, TYPICAL LAYOUT
	BRIDGE END AND NON-BRIDGE APPLICATIONS	3 OF 11	THRIE BEAM GUARD RAIL TRANSITION TO BRIDGE RAIL
		4 OF 11	NON BRIDGE APPLICATION, TYPICAL LAYOUT
		5 OF 11	NON BRIDGE APPLICATION, TYPICAL LAYOUT
		6 OF 11	TYPICAL DETAILS AND SECTIONS
		7 OF 11	TRAILING END DETAILS
		8 OF 11	TRAILING END DETAILS
		9 OF 11	RAIL STRUCTURAL DETAILS
		10 OF 11	GUARD RAIL POST AND BLOCK DETAILS
		11 OF 11	MISCELLANEOUS DETAILS, MOW STRIPS AND CONCRETE ANCHORS
*	OFF - SYSTEM BRIDGE	1 OF 1	OFF-SYSTEM BRIDGE GUARD RAIL DETAILS
*	BOX CULVERT DETAILS	1 OF 1	BOX CULVERT GUARD RAIL DETAILS

FOR INFORMATIONAL USE

SHEET NUMBER

PARISH | CONTROL SECTION | STATE PROJECT

DESIGN P. FOSSIER | CHECK K. BRAUNER | DETAIL J. DOUCET | CHECK K. BRAUNER | REVIEW C. GUIDRY | SERIES # 1 OF 11

APPROVED BY CHIEF ENGINEER: DATE: 6/29/2026

NO. | DATE | REVISION OR CHANGE ORDER DESCRIPTION | BY

STATE OF LOUISIANA DEPARTMENT OF TRANSPORTATION AND DEVELOPMENT

HIGHWAY GUARD RAIL (MASH) GENERAL NOTES, PAY ITEMS AND STANDARD PLAN INDEX

GR-MASH-ON

DOTD LOUISIANA DEPARTMENT OF TRANSPORTATION & DEVELOPMENT

STANDARD PLAN

IP_PWP:d1273831\HIGHWAY GUARD RAIL (MASH)_1 of 11.dgn

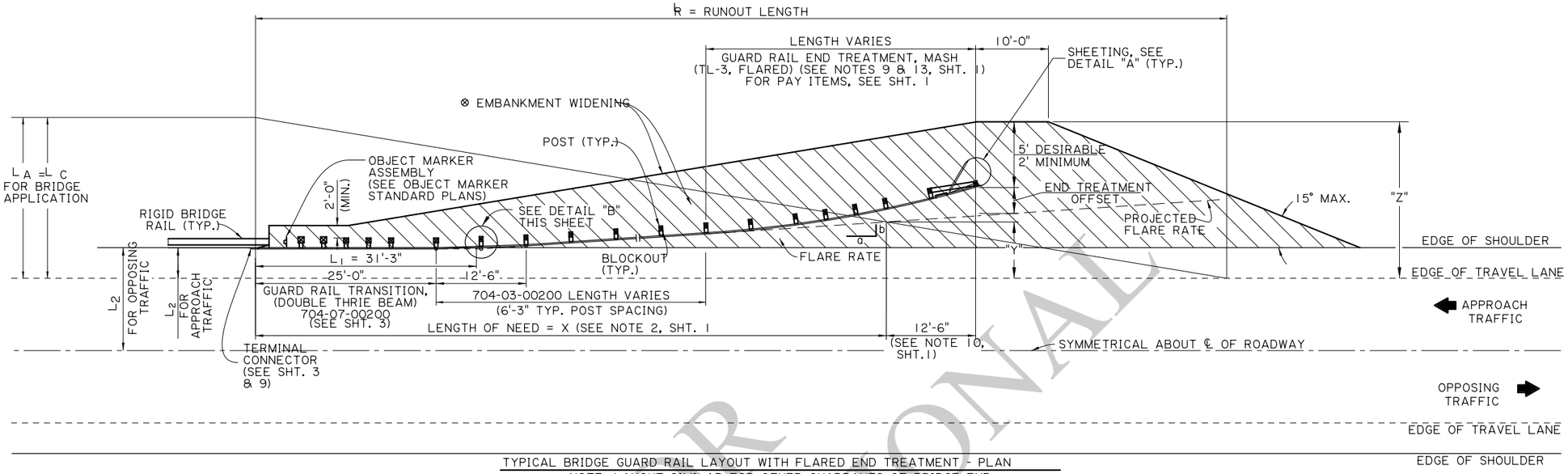

TYPICAL BRIDGE GUARD RAIL LAYOUT WITH FLARED END TREATMENT - PLAN

NOTE: LAYOUT SIMILAR FOR OTHER QUADRANTS OF BRIDGE END

⊗ SEE NOTES 5, 8, AND 12, SHT. 1.

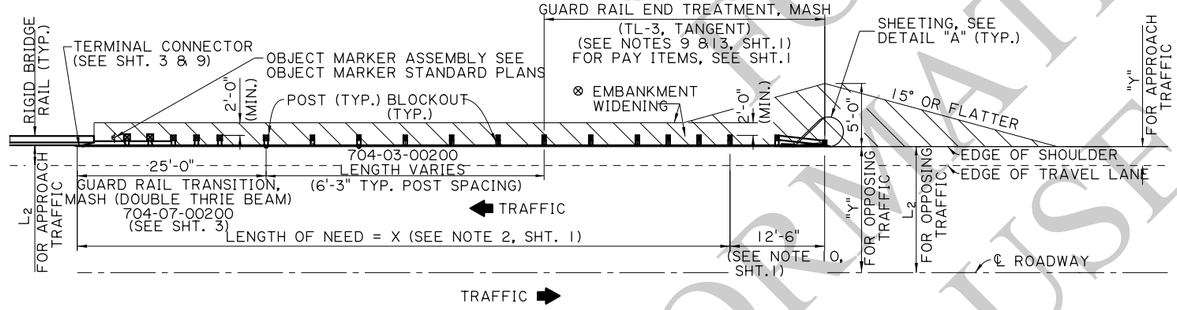

TYPICAL BRIDGE GUARD RAIL LAYOUT WITH TANGENT END TREATMENT - PREFERRED GRADING - PLAN

⊗ SEE NOTES 5, 8, AND 12, SHT. 1.

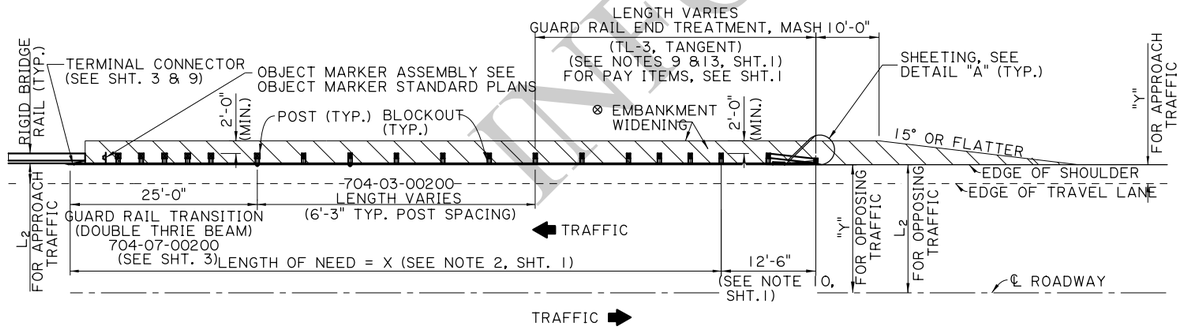

TYPICAL BRIDGE GUARD RAIL LAYOUT WITH TANGENT END TREATMENT - ALTERNATIVE GRADING - PLAN

⊗ SEE NOTES 5, 8, AND 12, SHT. 1.

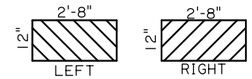

DETAIL "A"
RETROREFLECTIVE SHEETING
(SEE SHT. 1 NOTE 11)

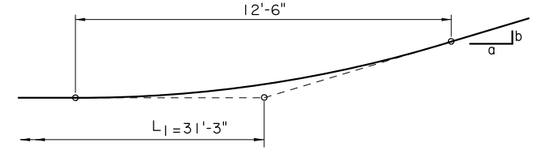

DETAIL "B"

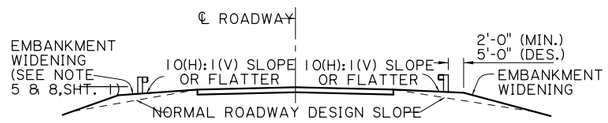

TYPICAL EMBANKMENT WIDENING SECTION

NOTES:

THE DETAILS SHOWN ON THIS SHEET SHALL BE USED TO CONNECT GUARD RAIL TO RIGID BRIDGE RAILS. DETAILS FOR CONNECTING TO A FLEXIBLE BRIDGE RAIL ARE SHOWN ON STANDARD PLAN GRR-06, "APPROACH GUARD RAIL FOR STRUCTURES WITH FLEXIBLE RAILS.".

FOR INFORMATIONAL USE

SHEET NUMBER

PARISH | CONTROL SECTION | STATE PROJECT

DESIGN P. FOSSIER | CHECK K. BRAUNER | DETAIL J. DOUCET | CHECK K. BRAUNER | REVIEW C. GUIDRY | SERIES # 2 OF 11

APPROVED BY CHIEF ENGINEER: DATE: 6/24/2026

REVISION OR CHANGE ORDER DESCRIPTION | BY | NO. | DATE

HIGHWAY GUARD RAIL (MASH)
BRIDGE APPLICATION
(TYPICAL LAYOUT)

GR-MASH-ON

STATE OF LOUISIANA — DEPARTMENT OF TRANSPORTATION AND DEVELOPMENT

DOTD LOUISIANA DEPARTMENT OF TRANSPORTATION & DEVELOPMENT

STANDARD PLAN

6/17/2026 10:1

IP_PWP:d1273831\HIGHWAY GUARD RAIL (MASH)_2 of 11.dgn

10:1
6/17/2026

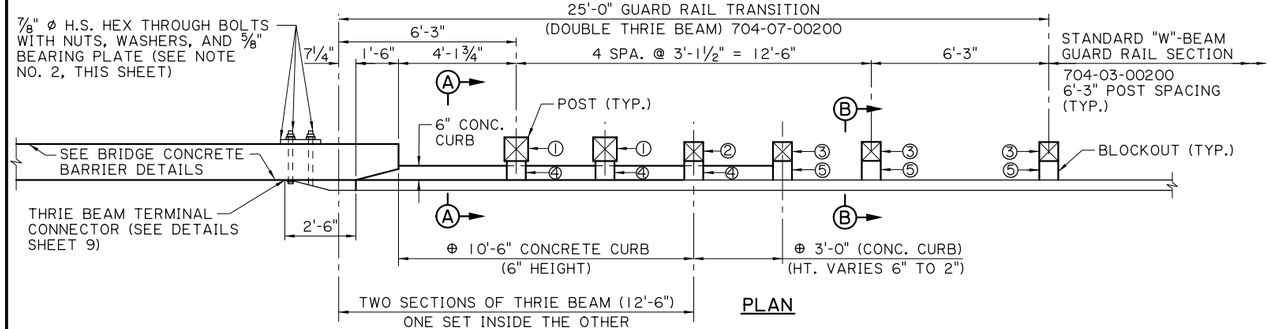

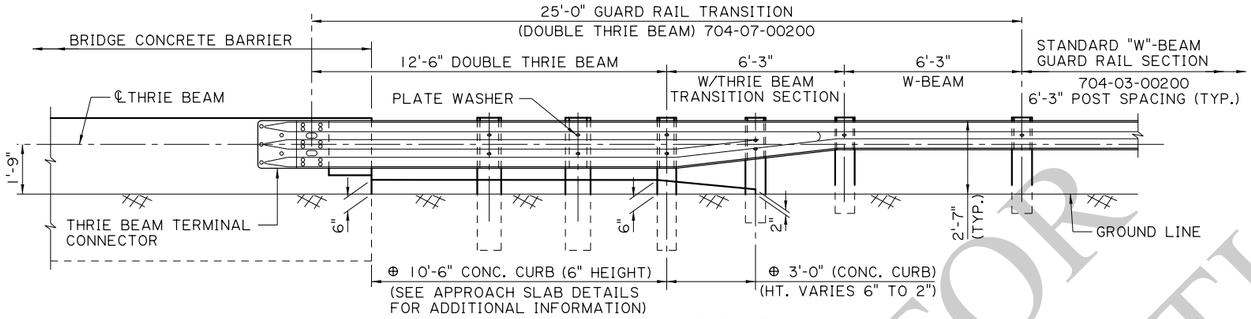

NOTES

1. THIS GUARD RAIL TRANSITION IS APPROPRIATE FOR CONNECTION TO THE CONCRETE BARRIER SHAPE AS SHOWN. SEE BRIDGE BARRIER RAILING DETAILS FOR INFORMATION.
2. 7/8" ø H.S. BOLTS FOR CONCRETE BARRIER AND THRIE BEAM TERMINAL CONNECTOR SHALL BE ASTM A449. FOR 5/8" STEEL BEARING PLATE, SEE SHEET 9. GALVANIZING SHALL BE IN ACCORDANCE WITH ASTM A153.

* 3. STEEL POST ALTERNATES: STEEL POSTS ARE ALLOWED AS AN ALTERNATE TO WOOD POSTS. USE W8 x 24 STEEL POST ALTERNATE FOR 10" x 10" WOOD POST. USE W6 x 25 STEEL POST ALTERNATE FOR 8" x 8" WOOD POST. USE SAME LENGTHS AS WOOD POSTS.

4. BLOCKOUTS: USE WOOD BLOCKOUTS ONLY, STEEL AND RECYCLED BLOCKOUTS ARE NOT PERMITTED FOR THE GUARD RAIL TRANSITION. ALL WOOD BLOCKOUTS ARE REQUIRED TO BE ROUTED WHEN USED WITH STEEL POSTS. SEE SHEET 10.
5. INTERMIXING OF STEEL AND WOOD POSTS IN THE GUARD RAIL TO BRIDGE RAIL TRANSITION SECTION IS NOT ALLOWED.

⊕ 6. FOR GUARD RAIL TRANSITIONS CONSTRUCTED WITH NEW APPROACH SLABS, CONCRETE CURBS SHALL BE USED AND PAID FOR WITH THE APPROACH SLAB PAY ITEM. FOR GUARD RAIL TRANSITIONS CONSTRUCTED WHEN THE APPROACH SLAB OR PAVEMENT IS EXISTING AND A NEW CURB IS NEEDED, THE ASPHALT CURB ALTERNATE DETAIL SHALL BE USED ON ASPHALT PAVEMENTS, AND PAID FOR UNDER 707-04-00100, "ASPHALT CURB" OR AS INDICATED IN THE PLANS. ON EXISTING CONCRETE PAVEMENTS, THE CONCRETE CURB ALTERNATE DETAIL SHALL BE USED AND PAID FOR UNDER 707-01-00100, "CONCRETE CURB" OR AS INDICATED IN THE PLANS.

7. THE USE OF THIS BRIDGE BARRIER TRANSITION HAS ONLY BEEN APPROVED FOR USE UNDER NCHRP REPORT 350. AS PER LADOTD'S MASH IMPLEMENTATION POLICY, THEIR CONTINUED USE IS ALLOWED WHILE A MASH ALTERNATIVE IS DEVELOPED OR EVALUATED.

*WOOD POST & WOOD BLOCKOUT FOR GUARD RAIL TRANSITION

NO.	SIZE (WIDTHxDEPTHxLENGTH)
①	10" x 10" x 8'-0" POST
②	8" x 8" x 8'-0" POST
③	8" x 8" x 6'-0" POST
④	8" x 8" x 1'-10" BLOCKOUT
⑤	8" x 8" x 1'-2" BLOCKOUT

*SEE NOTE FOR STEEL POST ALTERNATE

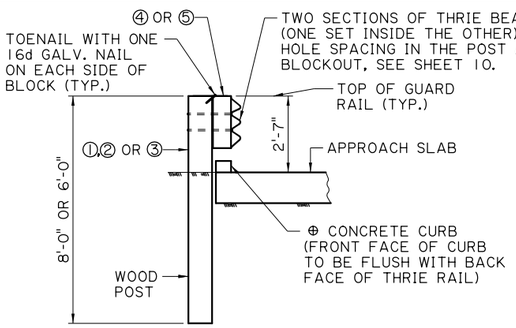

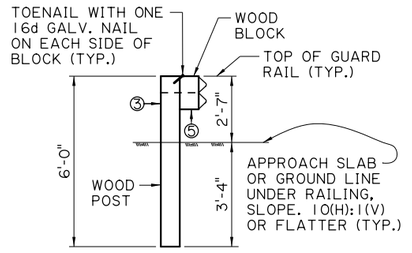

WOOD POST & WOOD BLOCKOUT

(POST & BLOCKOUT SIZE VARY IN TRANSITION, SEE PLAN VIEW)

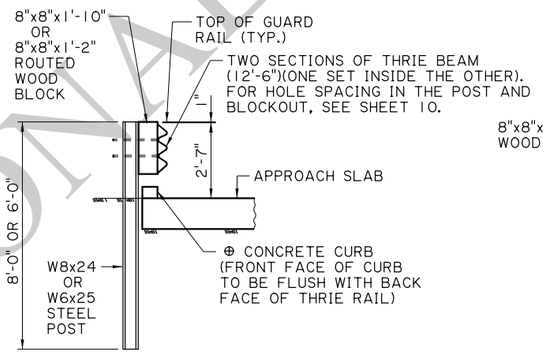

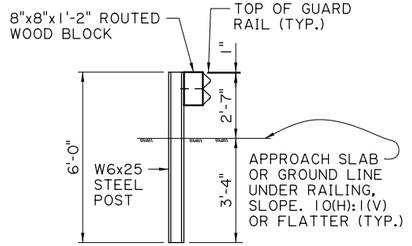

STEEL POST & ROUTED WOOD BLOCKOUT ALTERNATE

(POST & BLOCKOUT SIZE VARY IN TRANSITION, SEE PLAN VIEW)

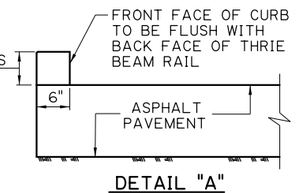

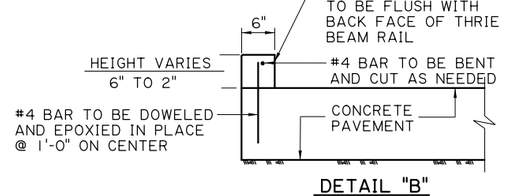

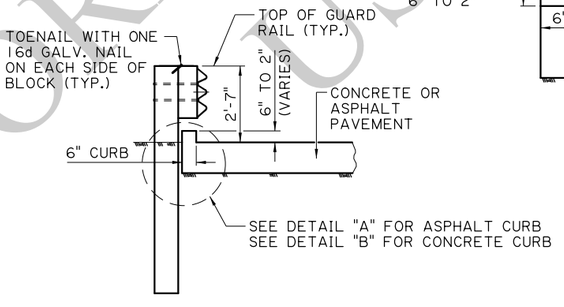

⊕CURB ALTERNATE FOR EXISTING PAVEMENTS - SECTION A-A
N.T.S.

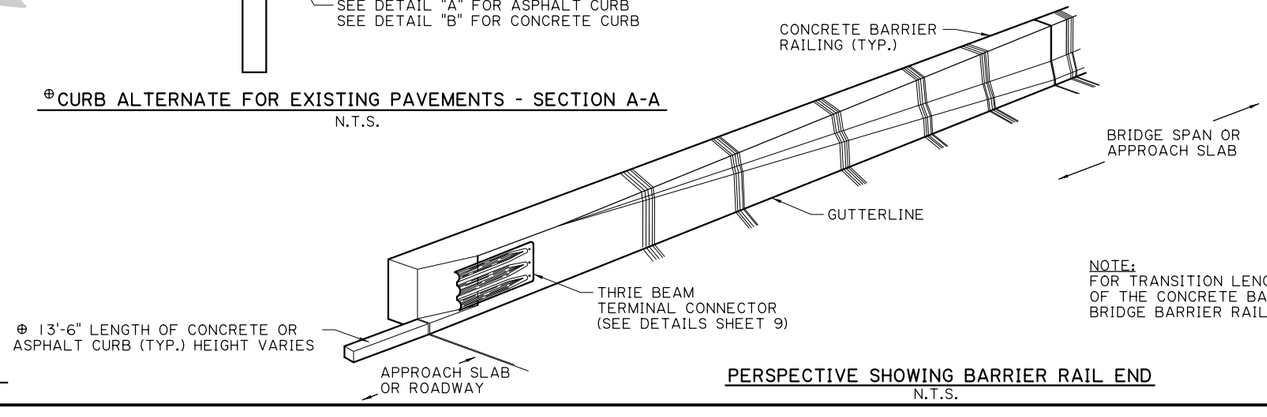

NOTE:
FOR TRANSITION LENGTH & DETAILS OF THE CONCRETE BARRIER, SEE BRIDGE BARRIER RAILING DETAILS.

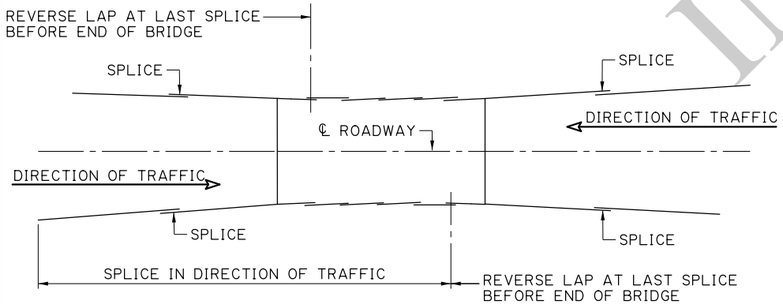

LAYOUT SHOWING DIRECTION OF GUARD RAIL SPLICE FOR TWO WAY TRAFFIC
N.T.S.

FOR INFORMATIONAL USE

SHEET NUMBER

PARISH	CONTROL SECTION	STATE PROJECT

DESIGN	P. FOSSIER	DETAIL	J. DOUCET	REVIEW	C. GUIDRY	SERIES # 3 OF 11
CHECK	K. BRAUNER	CHECK	K. BRAUNER			

APPROVED BY CHIEF ENGINEER: DATE: 6/29/2026

NO.	DATE	REVISION OR CHANGE ORDER DESCRIPTION	BY

HIGHWAY GUARD RAIL (MASH)
THRIE BEAM GUARD RAIL
TRANSITION TO BRIDGE RAIL

GR-MASH-ON

DOTD LOUISIANA DEPARTMENT OF TRANSPORTATION & DEVELOPMENT

STANDARD PLAN

IP_PWP:d1273831\HIGHWAY GUARD RAIL (MASH) 3 of 11.dgn

10:1
6/17/2026

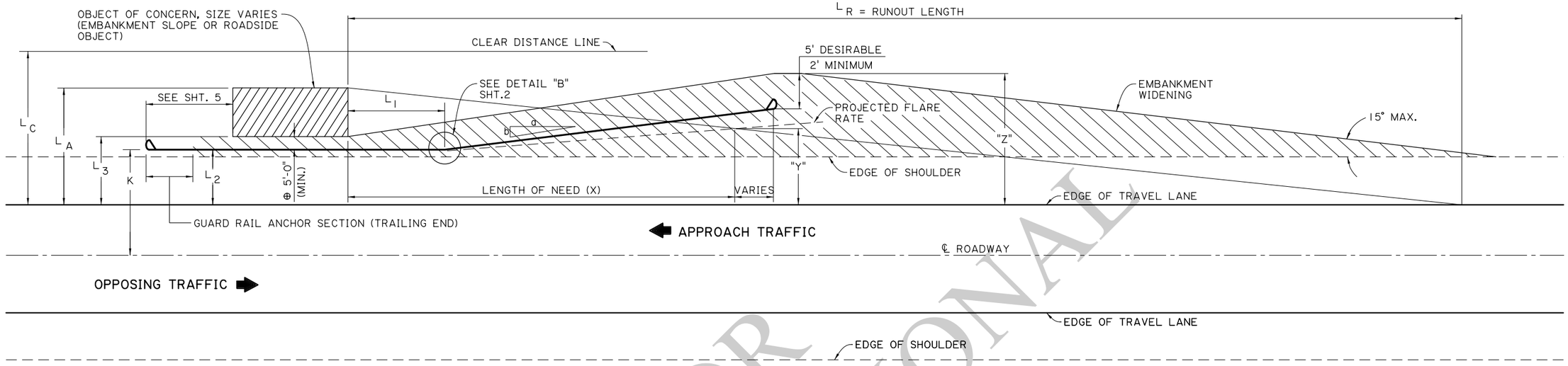

GUARD RAIL LAYOUT FOR SHOULDER APPLICATIONS - APPROACH VARIABLES

(GUARD RAIL OUTSIDE OF OPPOSING TRAFFIC'S CLEAR ZONE ; K > Lc)
N.T.S.

⊕ MINIMUM DISTANCE MEASURED FROM BACK FACE OF GUARD RAIL TO FRONT FACE OF OBJECT OF CONCERN.

LAYOUT FOR TANGENT GUARD RAIL SECTIONS AND END TREATMENTS SIMILAR. FOR EMBANKMENT WIDENING DETAILS, SEE SHT. NO. 2.

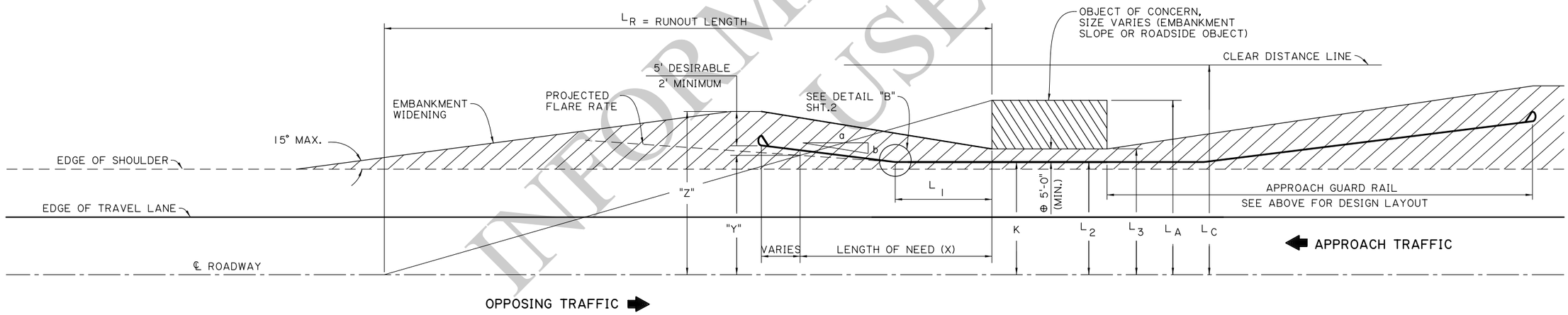

GUARD RAIL LAYOUT FOR SHOULDER APPLICATIONS - OPPOSING VARIABLES

(GUARD RAIL INSIDE OF OPPOSING TRAFFIC'S CLEAR ZONE ; K < Lc)
N.T.S.

FOR INFORMATIONAL USE

SHEET NUMBER

PARISH	CONTROL SECTION	STATE PROJECT

DESIGN	P. FOSSIER
CHECK	K. BRAUNER
DETAIL	J. DOUCET
CHECK	K. BRAUNER
REVIEW	C. GUIDRY
SERIES #	4 OF 11

APPROVED BY CHIEF ENGINEER: DATE: 6/29/2026

NO.	DATE	REVISION OR CHANGE ORDER DESCRIPTION	BY

HIGHWAY GUARD RAIL (MASH)
NON-BRIDGE APPLICATION
(TYPICAL LAYOUT)

GR-MASH-ON

DOTD LOUISIANA DEPARTMENT OF TRANSPORTATION & DEVELOPMENT

STANDARD PLAN

IP_PWP:d1273831\HIGHWAY GUARD RAIL (MASH) 4 of 11.dgn

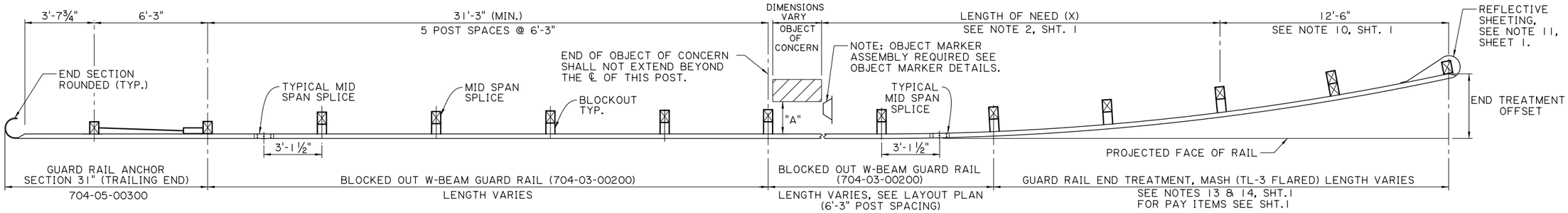

FOR TRAILING END TERMINAL DETAILS AND NOTES, SEE SHTS. 7 & 8.

BACK FACE OF GUARD RAIL TO FRONT FACE OF OBJECT = "A" = 5'-0" MIN.

PLAN - NON-BRIDGE END APPLICATION - FLARED

N.T.S.

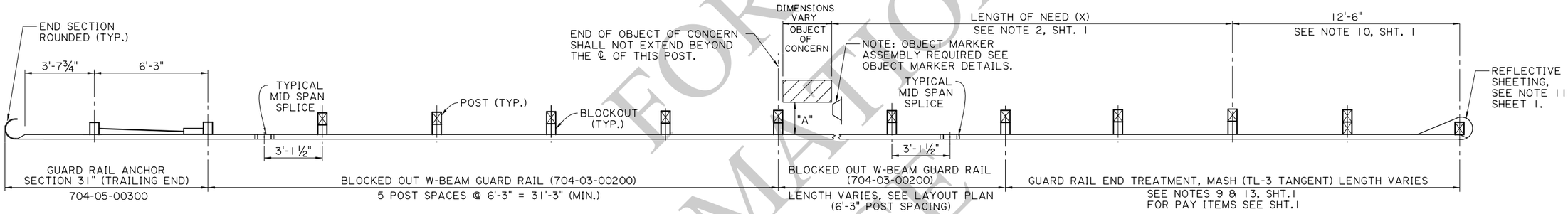

FOR TRAILING END TERMINAL DETAILS AND NOTES, SEE SHTS. 7 & 8.

BACK FACE OF GUARD RAIL TO FRONT FACE OF OBJECT = "A" = 5'-0" MIN.

PLAN - NON-BRIDGE END APPLICATION - TANGENT

N.T.S.

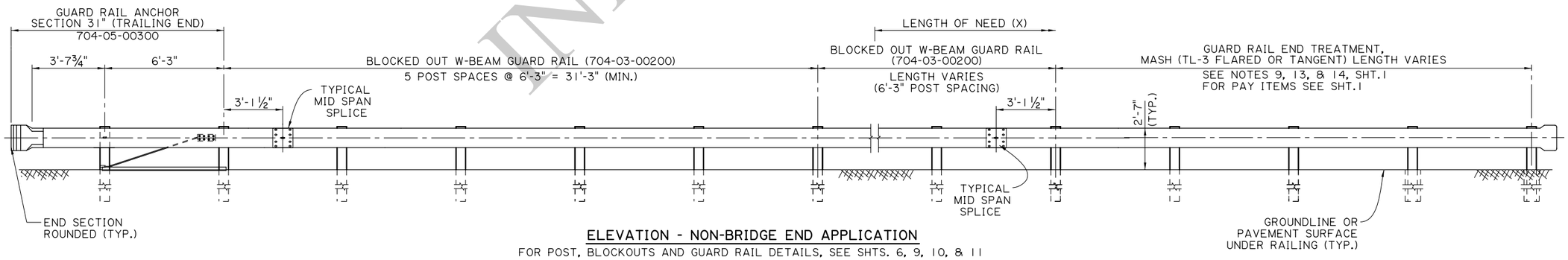

ELEVATION - NON-BRIDGE END APPLICATION

FOR POST, BLOCKOUTS AND GUARD RAIL DETAILS, SEE SHTS. 6, 9, 10, & 11

N.T.S.

FOR INFORMATIONAL USE

SHEET NUMBER

PARISH	CONTROL SECTION	STATE PROJECT

DESIGN	P. FOSSIER	DETAIL	J. DOUCET	REVIEW	C. GUIDRY
CHECK	K. BRAUNER	CHECK	K. BRAUNER	SERIES #	5 OF 11

APPROVED BY CHIEF ENGINEER:

DATE: 6/29/2026

NO.	DATE	REVISION OR CHANGE ORDER DESCRIPTION	BY

HIGHWAY GUARD RAIL (MASH)
NON-BRIDGE APPLICATION
(TYPICAL LAYOUT)

GR-MASH-ON

DOTD
LOUISIANA DEPARTMENT OF TRANSPORTATION & DEVELOPMENT

STANDARD PLAN

10:1

6/17/2026

IP_PWP:d127383\HIGHWAY GUARD RAIL (MASH)_5 of 11.dgn

10:29
6/17/2026

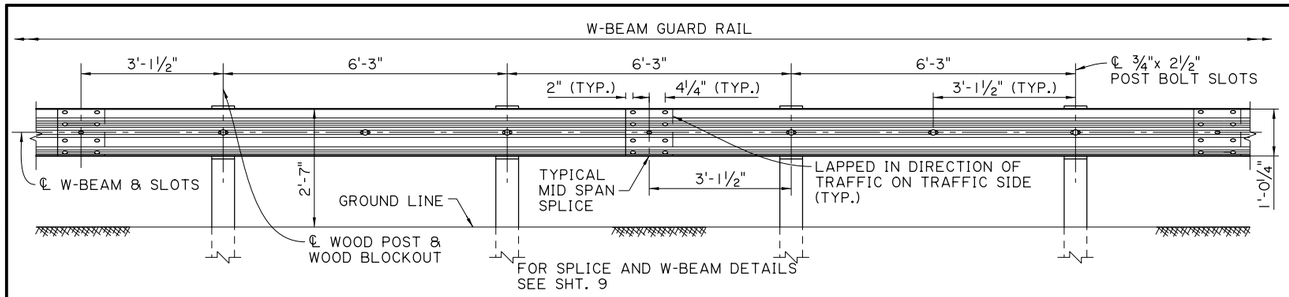

TYPICAL W-BEAM RAIL ELEMENT, 12 GAUGE
N.T.S.

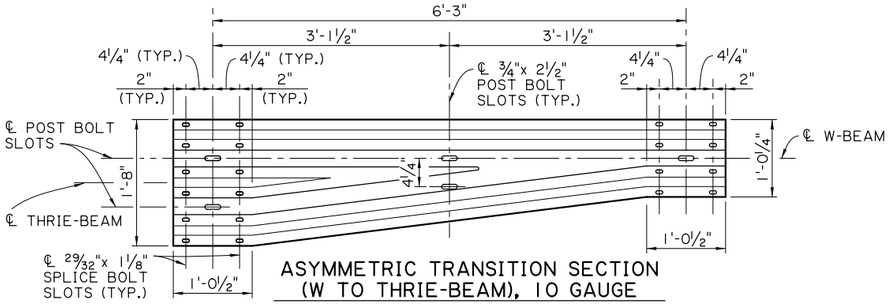

ASYMMETRIC TRANSITION SECTION (W TO THRIE-BEAM), 10 GAUGE
N.T.S.

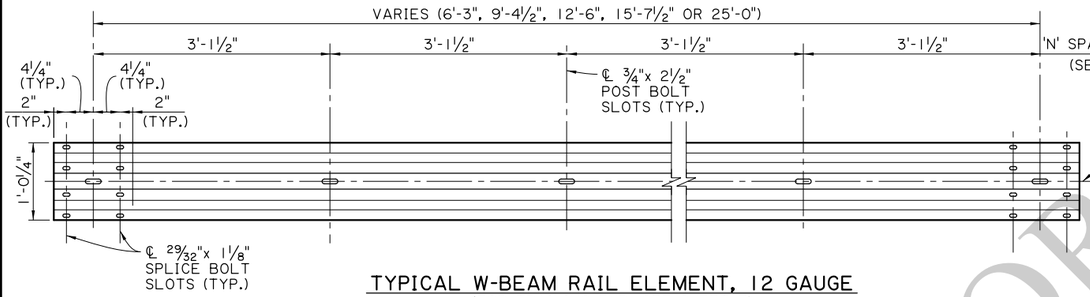

TYPICAL W-BEAM RAIL ELEMENT, 12 GAUGE
(FOR TRAILING END, SEE SHEET 7)
N.T.S.

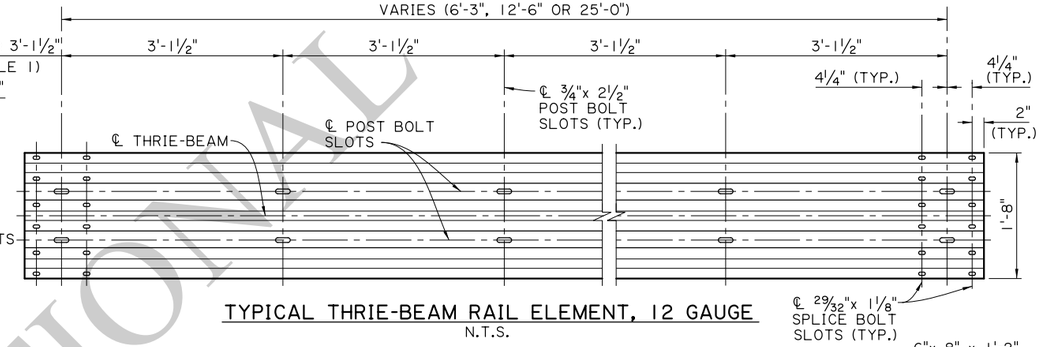

TYPICAL THRIE-BEAM RAIL ELEMENT, 12 GAUGE
N.T.S.

* W6x8.5 MAY BE USED AS AN ALTERNATE.

TABLE 1: ELEMENT SUMMARY TABLE:

PANEL TYPE	NUMBER OF SPACES 'N'	GAUGE
6'-3" W-BEAM	2	12
9'-4½" W-BEAM	3	12
12'-6" W-BEAM	4	12
15'-7½" W-BEAM	5	12
25'-0" W-BEAM	8	12

PANEL TYPE	NUMBER OF SPACES 'N'	GAUGE
6'-3" THRIE-BEAM	2	12
12'-6" THRIE-BEAM	4	12
25'-0" THRIE-BEAM	8	12
THRIE-BEAM TRANSITION	2	10

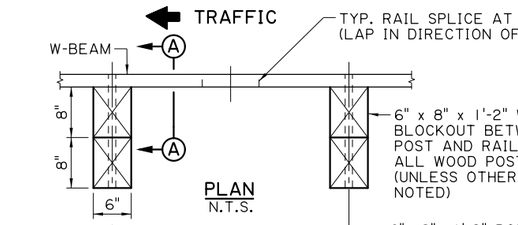

DETAIL OF 6" x 8" x 6'-0" WOOD POSTS⊕ AND WOOD BLOCKS-STD. GUARD RAIL
N.T.S.

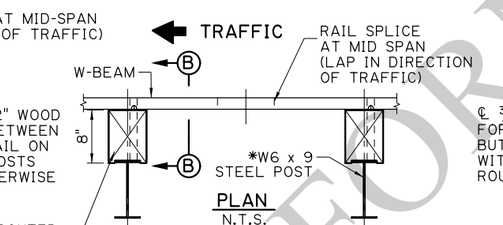

*DETAIL OF W6 x 9 STEEL POSTS AND WOOD BLOCKS-STD. GUARD RAIL
N.T.S.

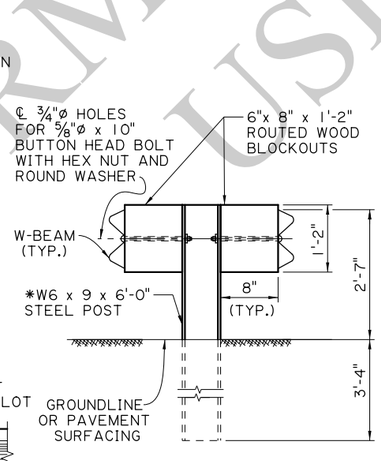

TYPICAL W-BEAM MEDIAN BARRIER DETAIL STEEL POST ONLY
N.T.S.

⊕ 7 ½"ø x 6'-0" ROUND WOOD POST AND WOOD BLOCK MAY BE USED IN LIEU OF 6" X 8" X 6'-0" WOOD POSTS AND WOOD BLOCK. SEE SHEET 10.

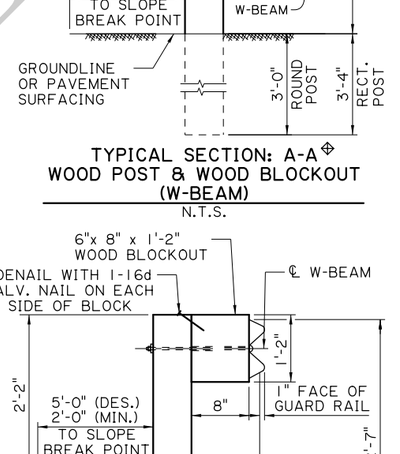

TYPICAL SECTION: A-A⊕ WOOD POST & WOOD BLOCKOUT (W-BEAM)
N.T.S.

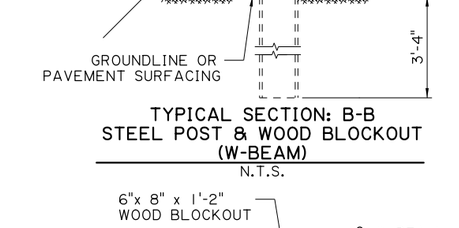

TYPICAL SECTION: B-B STEEL POST & WOOD BLOCKOUT (W-BEAM)
N.T.S.

TYPICAL SECTION: A-A WOOD POST & WOOD BLOCKOUT WITH 4" MOUNTABLE CURB
N.T.S.

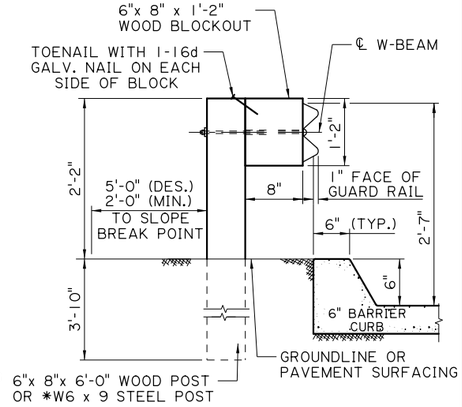

TYPICAL SECTION: A-A WOOD POST & WOOD BLOCKOUT WITH 6" BARRIER CURB
N.T.S.

FOR INFORMATIONAL USE

SHEET NUMBER

PARISH	CONTROL SECTION	STATE PROJECT

DESIGN	P. FOSSIER
CHECK	K. BRAUNER
DETAIL	J. DOUCET
CHECK	K. BRAUNER
REVIEW	C. GUIDRY
SERIES #	6 OF 11

APPROVED BY CHIEF ENGINEER: DATE: 6/29/2026

NO.	DATE	REVISION OR CHANGE ORDER DESCRIPTION	BY

HIGHWAY GUARD RAIL (MASH) TYPICAL DETAILS AND SECTIONS

GR-MASH-ON

DOTD LOUISIANA DEPARTMENT OF TRANSPORTATION & DEVELOPMENT

STANDARD PLAN

IP_PWP:d1273831\HIGHWAY GUARD RAIL (MASH)_6 of 11.dgn

10:49
6/17/2026

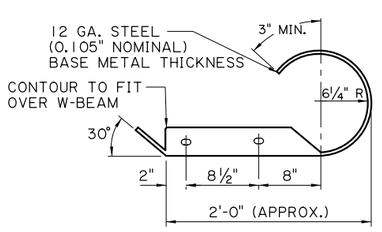

PLAN VIEW

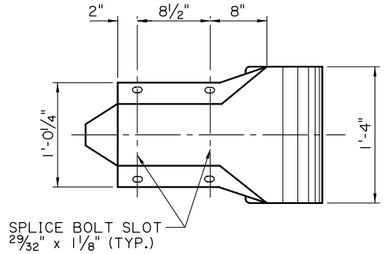

FRONT VIEW

W BEAM END SECTION ROUNDED
N.T.S.

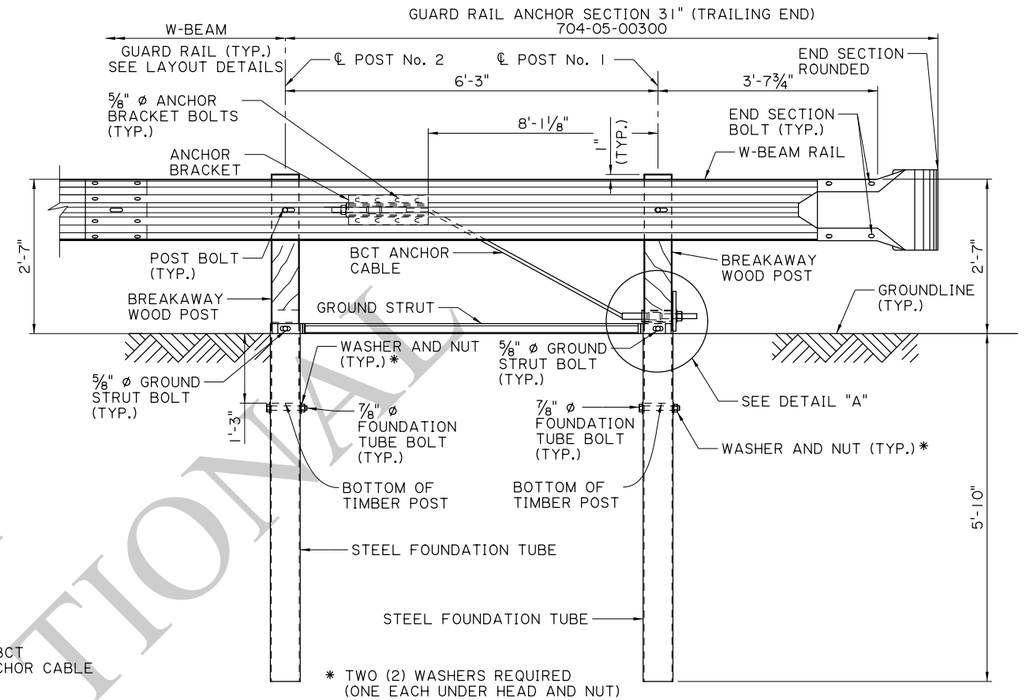

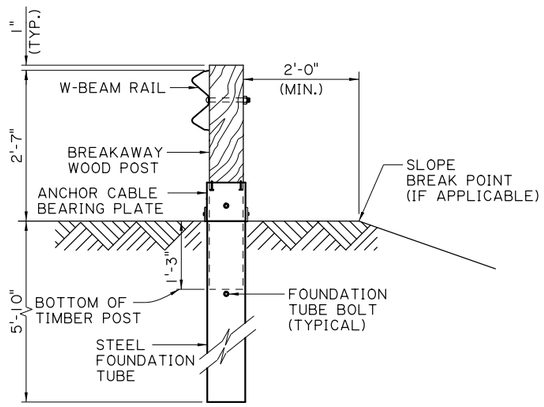

SECTION A-A - POST No. 1
N.T.S.

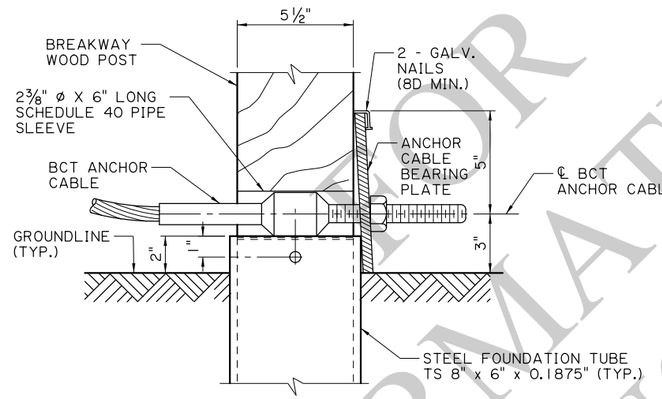

DETAIL "A" - POST No. 1
POST #1 GROUND STRUT NOT SHOWN FOR CLARITY.
POST #2 SIMILAR W/O BCT ANCHOR CABLE AND BEARING PLATE.
N.T.S.

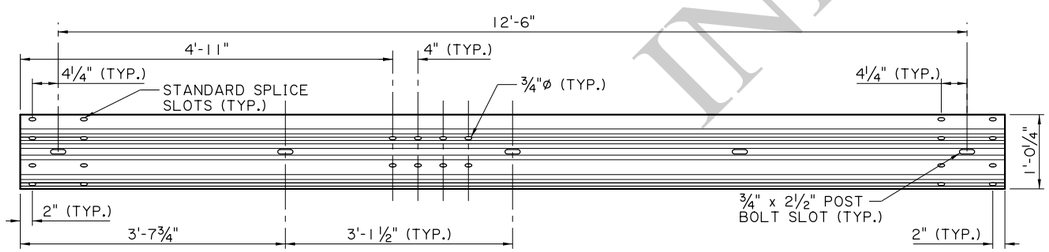

TYPICAL 12'-6" W-BEAM SECTION, 12 GAUGE, TRAILING END SECTION
N.T.S.

TRAILING END RAIL DETAIL - ELEVATION
NOTE: FOR OTHER TRAILING END TERMINAL DETAILS, SEE SHT. 8 OF 11.
N.T.S.

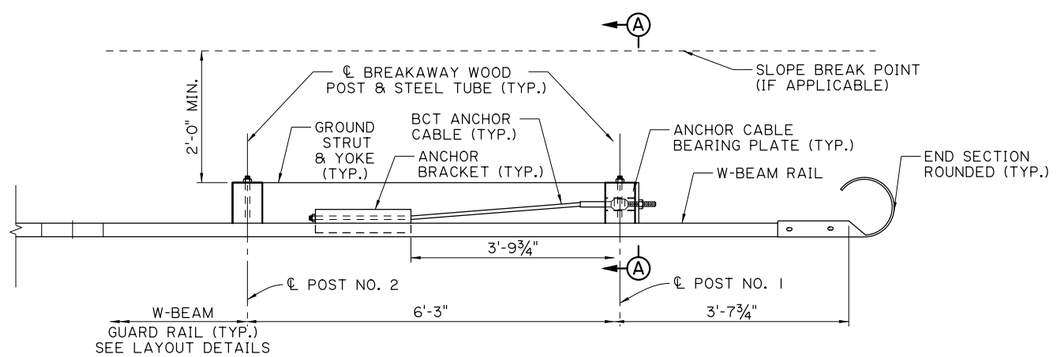

TRAILING END RAIL DETAIL - PLAN
N.T.S.

INFORMATIONAL USE

SHEET NUMBER		
PARISH	CONTROL SECTION	STATE PROJECT
DESIGN P. FOSSIER / CHECK K. BRAUNER	DETAIL J. DOUCET / CHECK K. BRAUNER	REVIEW C. GUIDRY / SERIES # 7 OF 11

APPROVED BY CHIEF ENGINEER:
DATE: 6/29/2026

NO.	DATE	REVISION OR CHANGE ORDER DESCRIPTION	BY

STATE OF LOUISIANA
DEPARTMENT OF TRANSPORTATION AND DEVELOPMENT
"DOTD IS DEDICATED"

HIGHWAY GUARD RAIL (MASH)
TRAILING END DETAILS

GR-MASH-ON

DOTD
LOUISIANA DEPARTMENT OF TRANSPORTATION & DEVELOPMENT

STANDARD PLAN

IP_PWP:d1273831\HIGHWAY GUARD RAIL (MASH)_7 of 11.dgn

10:56
6/17/2026

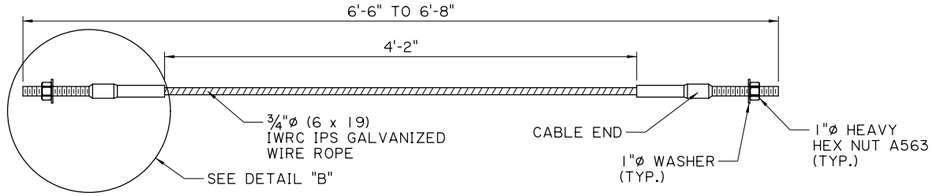

BCT ANCHOR CABLE
N.T.S.

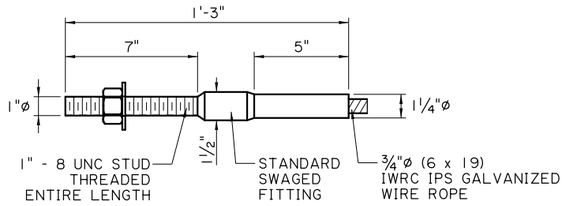

DETAIL "B"

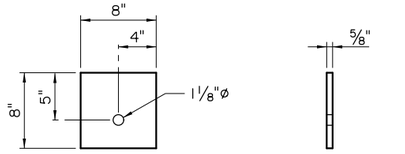

SIDE VIEW

FRONT VIEW

ANCHOR CABLE
BEARING PLATE
N.T.S.

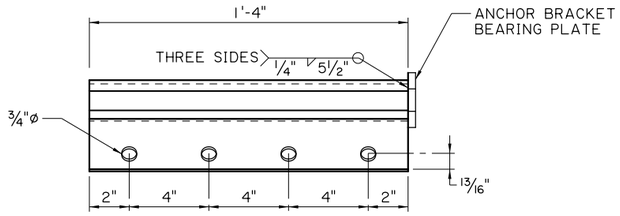

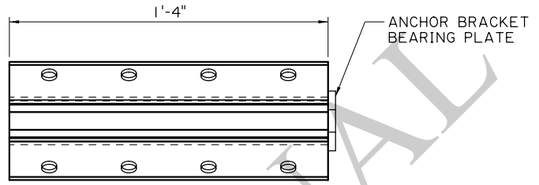

STEEL ANCHOR BRACKET
N.T.S.

NOTES:

FOUNDATION TUBE BOLTS ARE ⅞" DIAMETER ASTM A307 HEX HEAD BOLT. FOUNDATION TUBE BOLTS REQUIRE ASTM A563 A NUT AND TWO ASTM F844 ⅞" DIAMETER FLAT WASHERS. INSTALL ONE WASHER UNDER BOLT HEAD AND ONE WASHER UNDER NUT.

ANCHOR BRACKET AND GROUND STRUT BOLTS ARE ⅝" DIAMETER ASTM A307 HEX HEAD BOLTS AND REQUIRE ASTM A563 A NUTS AND TWO ASTM F844 ⅝" DIAMETER FLAT WASHERS EACH. INSTALL ONE WASHER UNDER BOLT HEAD AND ONE WASHER UNDER NUT.

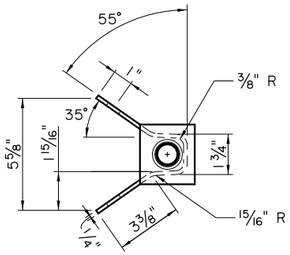

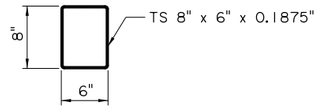

PLAN VIEW

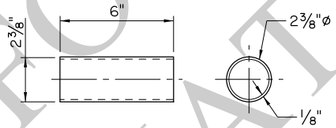

2⅜"ø POST SLEEVE
N.T.S.

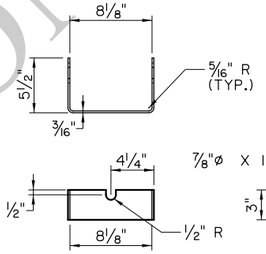

YOKE DETAIL
N.T.S.

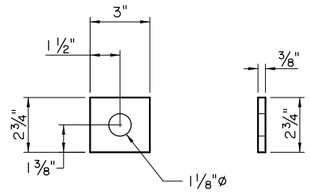

ANCHOR BRACKET
BEARING PLATE
N.T.S.

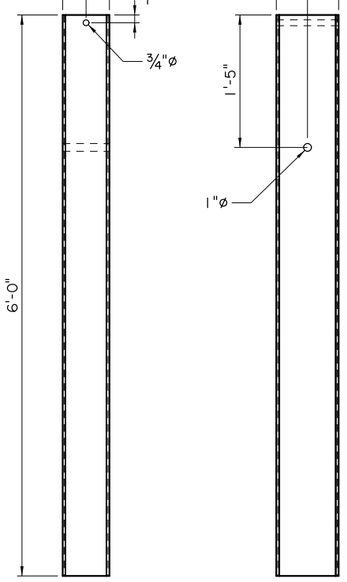

FRONT VIEW

SIDE VIEW

FOUNDATION TUBE
N.T.S.

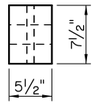

PLAN VIEW

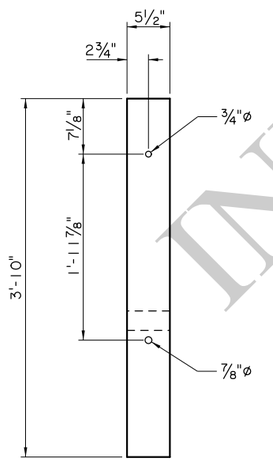

FRONT VIEW

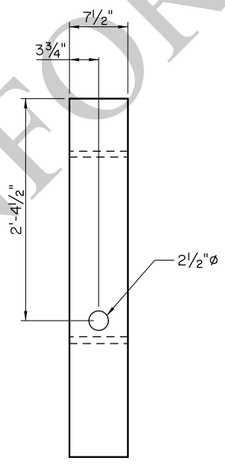

SIDE VIEW

BREAKAWAY WOOD POST
N.T.S.

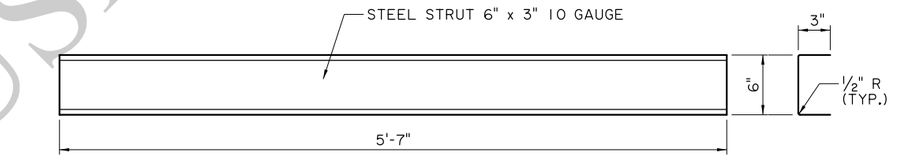

STRUT - PLAN VIEW
N.T.S.

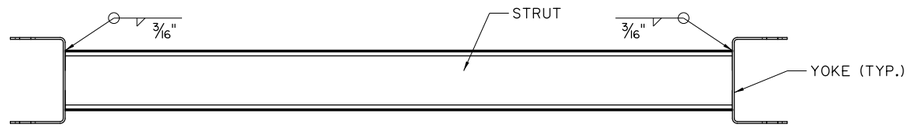

PLAN VIEW

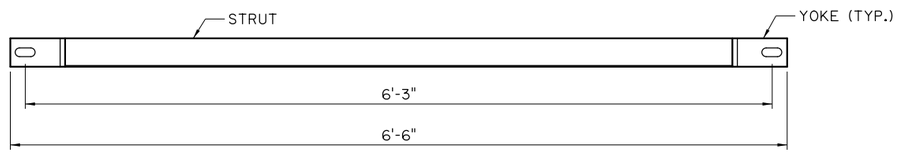

FRONT VIEW

GROUND STRUT DETAIL
N.T.S.

FOR INFORMATIONAL USE

SHEET NUMBER		
PARISH	CONTROL SECTION	STATE PROJECT
DESIGN P. FOSSIER	DETAIL J. DOUCET	REVIEW C. GUIDRY
CHECK K. BRAUNER	CHECK K. BRAUNER	SERIES # 8 OF 11

APPROVED BY CHIEF ENGINEER: DATE: 6/29/2026

NO.	DATE	REVISION OR CHANGE ORDER DESCRIPTION	BY

STATE OF LOUISIANA
DEPARTMENT OF TRANSPORTATION AND DEVELOPMENT

HIGHWAY GUARD RAIL (MASH) TRAILING END DETAILS

GR-MASH-ON

DOTD
LOUISIANA DEPARTMENT OF TRANSPORTATION & DEVELOPMENT

STANDARD PLAN

IP_PWP:d1273831\HIGHWAY GUARD RAIL (MASH)_8 of 11.dgn

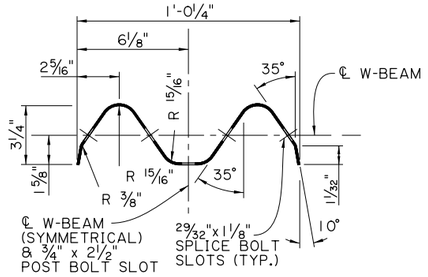

TYPICAL W BEAM

N.T.S.

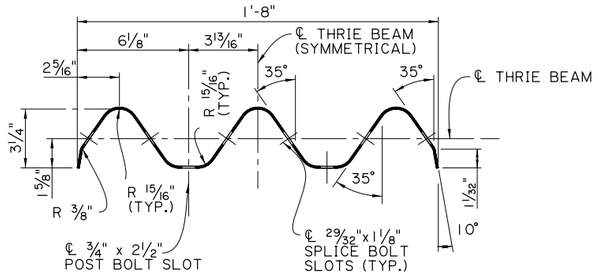

TYPICAL THRIE BEAM

N.T.S.

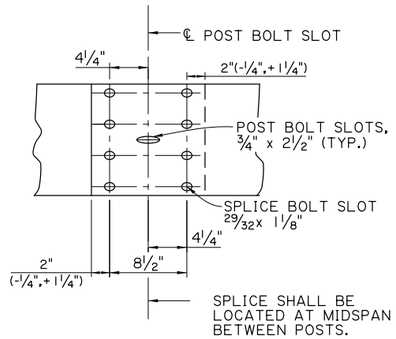

TYPICAL W-BEAM SPLICE DETAIL - ELEVATION

5/8"ø x 1 1/4" BUTTON HEAD OVAL SHOULDER BOLTS WITH 5/8"ø RECESSED HEX NUTS-TOTAL 8 PER SPLICE. LAP IN DIRECTION OF TRAFFIC.

N.T.S.

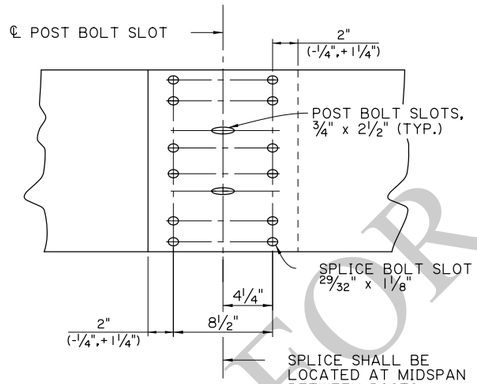

TYPICAL THRIE BEAM SPLICE DETAIL - ELEVATION

5/8"ø x 1 1/4" BUTTON HEAD OVAL SHOULDER BOLTS WITH 5/8"ø RECESSED HEX NUTS-TOTAL 12 PER SPLICE. LAP IN DIRECTION OF TRAFFIC.

N.T.S.

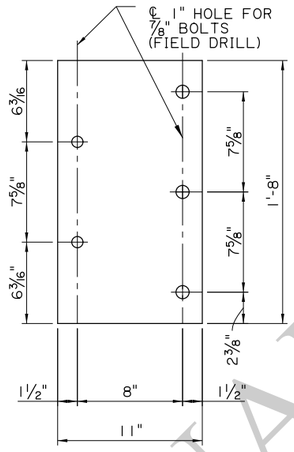

5/8"ø BEARING PLATE

(FOR ANCHORING THRIE BEAM TO CONCRETE BARRIER RAIL)

N.T.S.

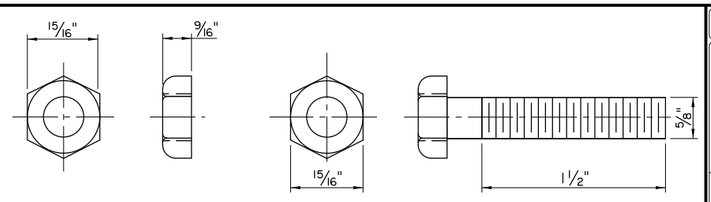

NUT BOLT

5/8"ø HEX BOLT & HEX NUT

(FOR FASTENING THE ANCHOR BRACKET TO RAIL IN TRAILING END)

N.T.S.

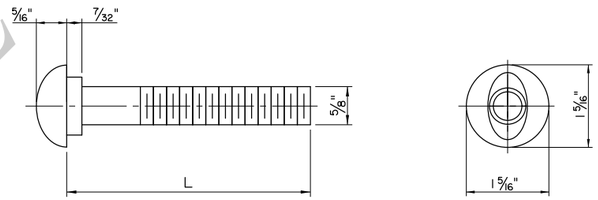

5/8"ø BUTTON HEAD BOLT

N.T.S.

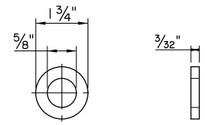

5/8"ø POST BOLT WASHERS

N.T.S.

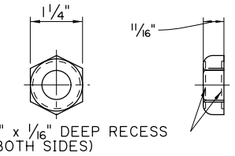

5/8"ø RECESS NUT

N.T.S.

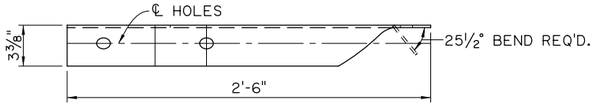

PLAN

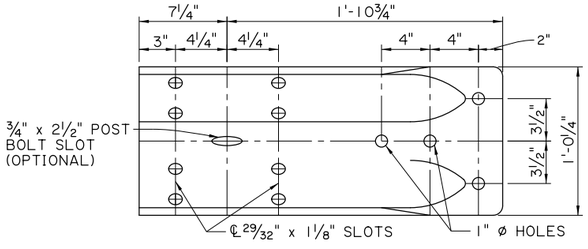

ELEVATION

TYPICAL W BEAM TERMINAL CONNECTOR, 10 GAUGE

N.T.S.

NOTES:

1. ALL RAIL COMPONENTS EXCEPT THE W AND THRIE BEAM TERMINAL CONNECTORS AND THE W TO THRIE BEAM TRANSITION SHALL MEET AASHTO M 180, CLASS "A" (12 GAUGE) METAL THICKNESS WITH A TYPE II COATING. THE W BEAM AND THRIE BEAM TERMINAL CONNECTORS AND TRANSITION SECTIONS SHALL BE CLASS "B" (10 GAUGE) METAL THICKNESS WITH TYPE II COATING.

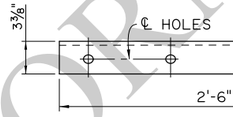

PLAN

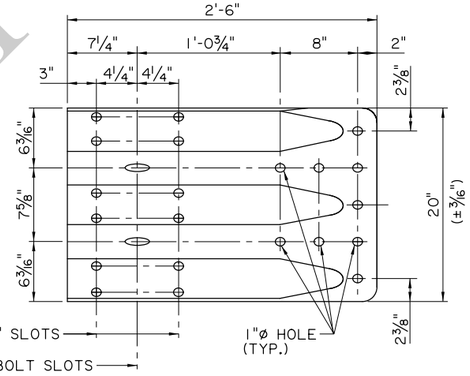

ELEVATION

TYPICAL THRIE BEAM TERMINAL CONNECTOR, 10 GAUGE

N.T.S.

5/8"ø BUTTON HEAD NUT	
L	THREAD LENGTH
1 1/4"	1 1/8"
2"	1 3/4"
10"	4"
1'-6"	4"
1'-8"	4"

NOTES:

5/8"ø BUTTON HEAD BOLTS:

(1 1/4" LENGTH): THIS BOLT IS USED TO SPLICE RAIL ELEMENTS USED IN THE STANDARD CORRUGATED SHEET STEEL BEAM GUARD RAIL.

(2" LENGTH): THIS BOLT IS FOR FASTENING RAILS TO STEEL POSTS WHEN USED IN THE STANDARD CORRUGATED SHEET STEEL BEAM GUARD RAIL.

(10" LENGTH): THIS BOLT IS USED FOR FASTENING RAILS TO WOOD BLOCK AND STEEL POST IN THE STANDARD CORRUGATED SHEET STEEL BEAM GUARD RAIL.

(1'-6" LENGTH): THIS BOLT IS FOR FASTENING WOOD BLOCKS & WOOD POSTS IN THE STANDARD CORRUGATED SHEET STEEL BEAM GUARD RAIL.

(1'-8" LENGTH): THIS BOLT IS FOR FASTENING NESTED THRIE BEAM TO WOOD BLOCKS AND POST AT THE FIRST TWO POST LOCATIONS IN THE GUARD RAIL TRANSITION AT THE ENDS OF RIGID (CONCRETE) STRUCTURES, UNLESS OTHERWISE SHOWN IN THE PLANS.

5/8" ø BOLTS SHALL CONFORM TO THE REQUIREMENTS OF ASTM A 307 GRADE "A" AND NUTS SHALL BE IN ACCORDANCE WITH ASTM A 563 GRADE "A" OR BETTER. BOLTS AND NUTS SHALL BE GALVANIZED IN ACCORDANCE WITH ASTM A 153.

STEEL POST & PLATES:

ALL STEEL POSTS AND PLATES SHALL CONFORM TO ASTM A 36 AND SHALL BE GALVANIZED IN ACCORDANCE WITH ASTM 123, NO PUNCHING, DRILLING OR CUTTING WILL BE PERFORMED AFTER GALVANIZING.

FOR INFORMATIONAL USE

SHEET NUMBER

PARISH | CONTROL SECTION | STATE PROJECT

DESIGN P. FOSSIER | DETAIL J. DOUCET | REVIEW C. GUIDRY | SERIES # 9 OF 11
CHECK K. BRAUNER | CHECK K. BRAUNER

APPROVED BY CHIEF ENGINEER: DATE: 6/24/2026

REVISION OR CHANGE ORDER DESCRIPTION | DATE | BY | NO.

HIGHWAY GUARD RAIL (MASH) RAIL STRUCTURAL DETAILS

GR-MASH-ON

STANDARD PLAN

6/17/2026 11:0
IP_PWP:d1273831\HIGHWAY GUARD RAIL (MASH)_9 of 11.dgn

13:1
6/17/2026
IP_PWP:d1273831\HIGHWAY GUARD RAIL (MASH)_10 of 11.dgn

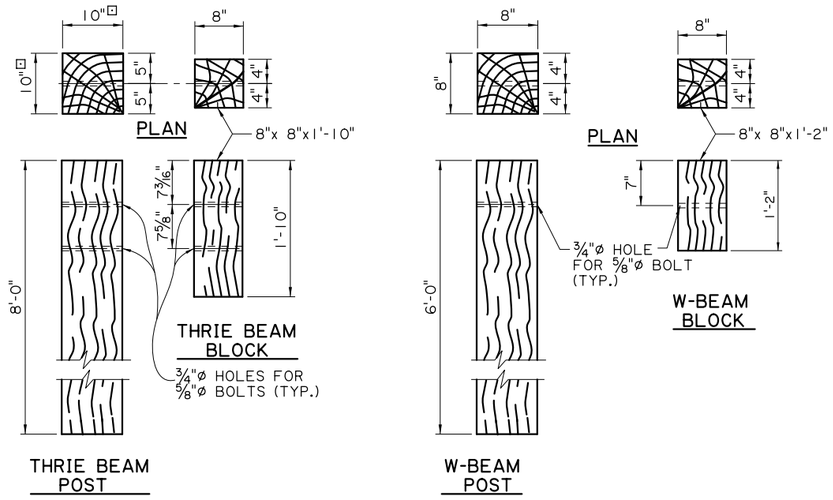

⊡ THRIE BEAM POST IS 8"x 8"x 8'-0" FOR TRANSITION POST No. 3.

WOOD POST AND WOOD BLOCK FOR THRIE BEAM TRANSITION TO BRIDGE RAIL

(POST SIZE, BLOCK SIZE AND HOLE LOCATIONS VARY WITH LOCATION IN TRANSITION, SEE SHT.3)

N.T.S.

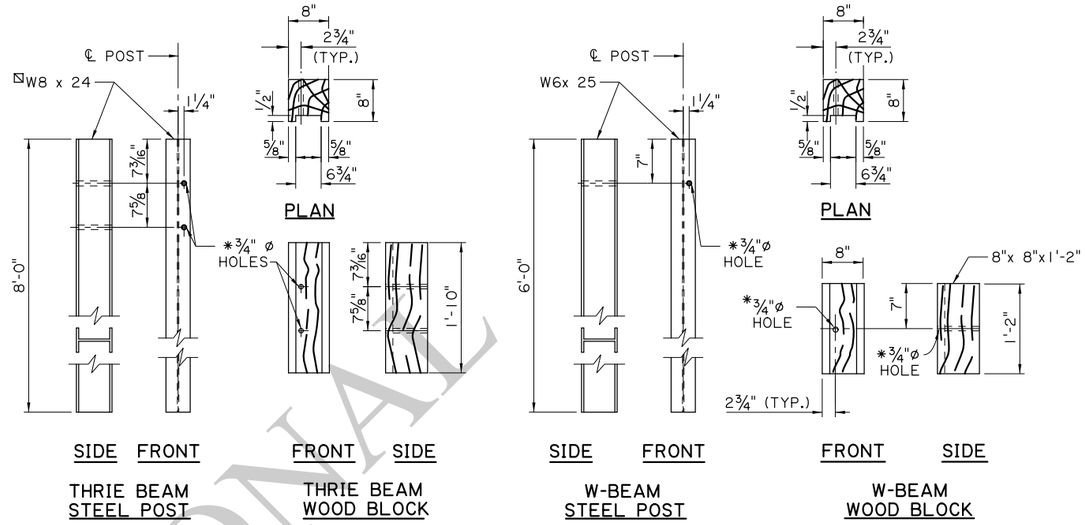

⊠ THRIE BEAM POST IS W6 x 25 (8'-0") FOR TRANSITION POST No. 3.

STEEL POST AND ROUTED WOOD BLOCK FOR THRIE BEAM TRANSITION TO BRIDGE RAIL

(POST SIZE, BLOCK SIZE AND HOLE LOCATIONS VARY WITH LOCATION IN TRANSITION, SEE SHT.3)

N.T.S.

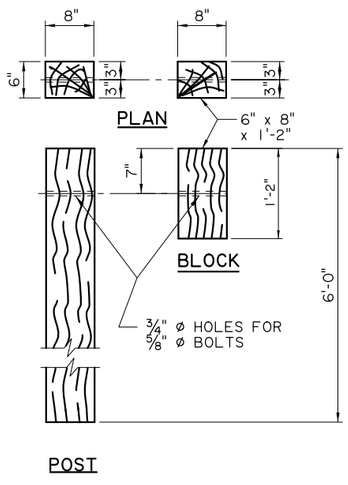

WOOD POST AND WOOD BLOCK FOR STANDARD W-BEAM GUARD RAIL

N.T.S.

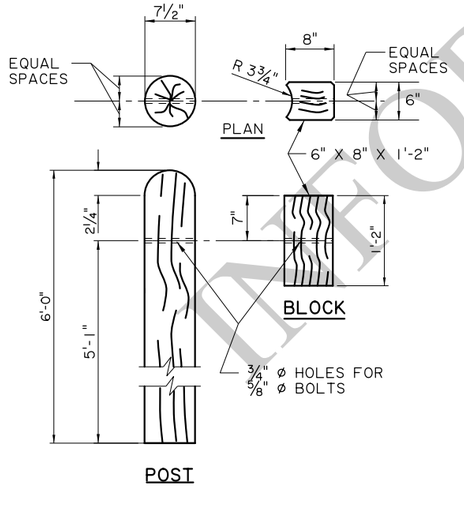

ROUND WOOD POST AND WOOD BLOCK ⊕ FOR STANDARD W-BEAM GUARD RAIL

N.T.S.

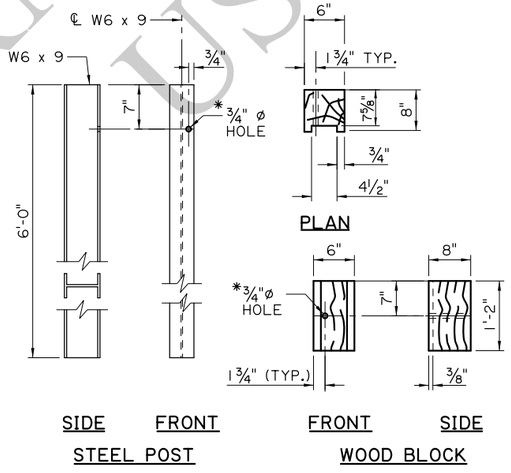

STEEL POST AND ROUTED WOOD BLOCK FOR STANDARD W-BEAM GUARD RAIL

N.T.S.

NOTES:

1. A RECYCLED BLOCK ALTERNATE IS ALLOWED AS A SUBSTITUTE FOR THE WOOD BLOCK ON A 1 FOR 1 BASIS IN A STANDARD BLOCKED-OUT SECTION AT NO ADDITIONAL PAYMENT. RECYCLED BLOCKS SHALL NOT BE USED IN TRANSITIONS, END TREATMENTS, OR IN TRAILING END SECTIONS. THE RECYCLED BLOCK SHALL HAVE FHWA HARDWARE ELIGIBILITY AND SHALL MEET AASHTO MASH REQUIREMENTS.

⊕ 2. A W6 x 8.5 STEEL POST MAY BE USED AS AN ALTERNATE FOR A W6 x 9 POST.

* 3. POST AND BLOCK HOLES SHALL BE DRILLED ADJACENT TO THE DIRECTION OF THE ON-COMING TRAFFIC.

4. ALL WOOD BLOCKS SHALL BE TOE-NAILED TO WOOD POSTS AND BLOCKS (INCLUDING BLOCK COMBINATIONS) WITH A 16d GALVANIZED NAIL TO PREVENT BLOCK ROTATION. (ONE ON EACH SIDE)

⊕ 5. THE ROUND WOOD POST AND WOOD BLOCKOUT IS ALLOWED TO REPLACE THE 6" X 8" STANDARD LINE POST AND BLOCKOUT FOR W BEAM. THE ROUND WOOD POSTS SHALL NOT BE USED AS AN ALTERNATE FOR CRT POSTS, BCT POSTS, OR THE POSTS IN THE GUARD RAIL TO BRIDGE RAIL TRANSITION SECTION. ROUND POSTS SHALL NOT BE USED IN THE TRAILING END SECTION, BEHIND A CURB, OR IN A GUARD RAIL END TREATMENT UNLESS SPECIFICALLY ALLOWED BY THE MANUFACTURER.

FOR INFORMATIONAL USE

SHEET NUMBER		
PARISH	CONTROL SECTION	STATE PROJECT
DESIGN K. BRAUNER	DETAIL B. ALLEN	REVIEW C. GUIDRY
CHECK B. ALLEN	CHECK K. BRAUNER	SERIES # 10 OF 11

APPROVED BY CHIEF ENGINEER: DATE: 6/29/2026

NO.	DATE	REVISION OR CHANGE ORDER DESCRIPTION	BY

STATE OF LOUISIANA DEPARTMENT OF TRANSPORTATION AND DEVELOPMENT

HIGHWAY GUARD RAIL (MASH) POST AND BLOCK DETAILS

GR-MASH-ON

DOTD LOUISIANA DEPARTMENT OF TRANSPORTATION & DEVELOPMENT

STANDARD PLAN

13:2
6/17/2026

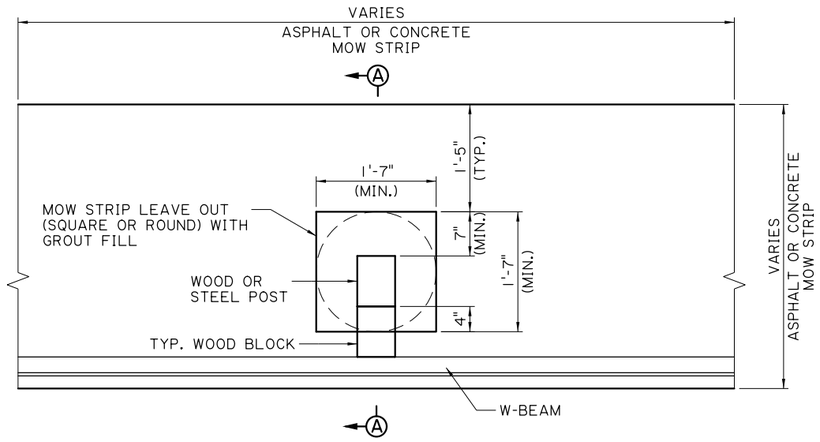

PLAN

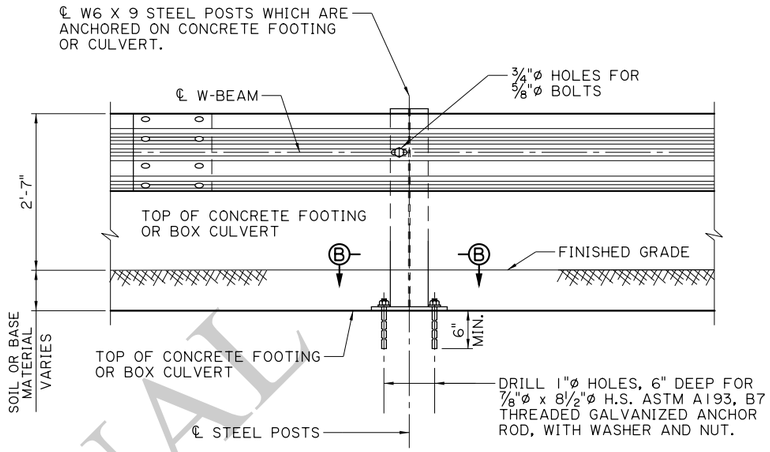

GALVANIZED STEEL BASE PLATE & STEEL POST

SPECIAL POST WITH BASE PLATE TO BE USED WHEN REQUIRED EMBEDMENT OF CONVENTIONAL POST IN SOIL CANNOT BE OBTAINED, FOR BOX CULVERTS OR OTHER CONCRETE FOOTINGS.

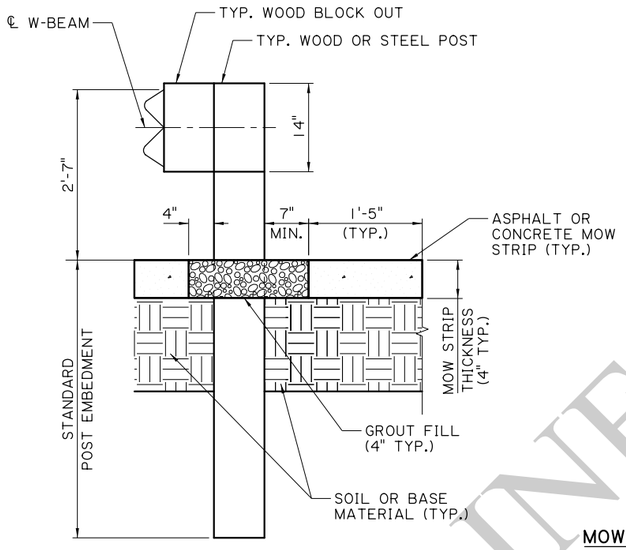

SECTION A-A

ASPHALT OR CONCRETE MOW STRIPS

N.T.S.

MOW STRIP NOTES:

ALL GUARD RAIL POSTS LOCATED WITHIN CONCRETE OR ASPHALT MOW STRIPS SHALL MEET INSTALLATION REQUIREMENTS SHOWN ON THIS SHEET.

THE LEAVE OUTS SHALL BE FILLED WITH A GROUT MIXTURE CONSISTING OF: 2719 POUNDS SAND, 188 POUNDS TYPE I OR II CEMENT, AND 550 POUNDS OF WATER PER CUBIC YARD WITH A 28 DAY COMPRESSIVE STRENGTH OF 230 PSI OR LESS. PROVIDE GROUT WITH A CONSISTENCY THAT WILL FLOW INTO AND COMPLETELY FILL ALL VOIDS.

ALL LABOR AND MATERIALS TO PLACE GROUT FILL SHALL BE INCLUDED IN PAYMENT FOR CONCRETE OR ASPHALT PAVING PAY ITEMS.

THE USE OF 6" X 8" RECTANGULAR TIMBER POSTS IN MOW STRIPS HAS ONLY BEEN APPROVED FOR USE UNDER NCHRP REPORT 350. AS PER LADOTD'S MASH IMPLEMENTATION POLICY, THEIR CONTINUED USE IS ALLOWED WHILE A MASH ALTERNATIVE IS DEVELOPED OR EVALUATED.

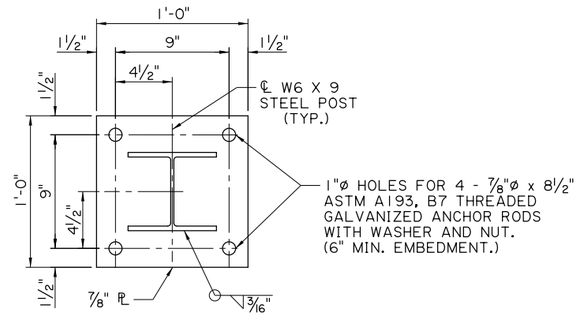

SECTION B-B

ANCHOR ROD INSTALLATION

ALL HOLES DRILLED INTO AN EXISTING CONCRETE STRUCTURE SHALL BE CLEANED WITH COMPRESSED AIR AND MAKE THEM FREE OF ANY OIL OR RESIDUE. THREADED RODS TO BE ANCHORED USING THE HILTI RE500 EPOXY ANCHORING SYSTEM. PLACE ANCHOR BOLT IN HOLE IMMEDIATELY AND WAIT FOR THE MANUFACTURER'S CURE TIME. COST FOR LABOR, MATERIAL AND INSTALLMENT OF BASE PLATE & ANCHOR ROD TO BE PAID FOR AS PART OF GUARD RAIL PAY ITEM.

FOR INFORMATIONAL USE

SHEET NUMBER

PARISH	CONTROL SECTION	STATE PROJECT

DESIGN	K. BRAUNER	DETAIL	K. BRAUNER	REVIEW	C. GUIDRY
CHECK	B. ALLEN	CHECK	B. ALLEN	SERIES #	11 OF 11

APPROVED BY CHIEF ENGINEER: DATE: 6/29/2026

NO.	DATE	REVISION OR CHANGE ORDER DESCRIPTION	BY

HIGHWAY GUARD RAIL (MASH)
MOW STRIP AND
CONCRETE ANCHOR DETAILS

GR-MASH-ON

LOUISIANA DEPARTMENT OF TRANSPORTATION & DEVELOPMENT

STANDARD PLAN

IP_PWP:d1273831\HIGHWAY GUARD RAIL (MASH)_11 of 11.dgn

6/11/2026 10:2

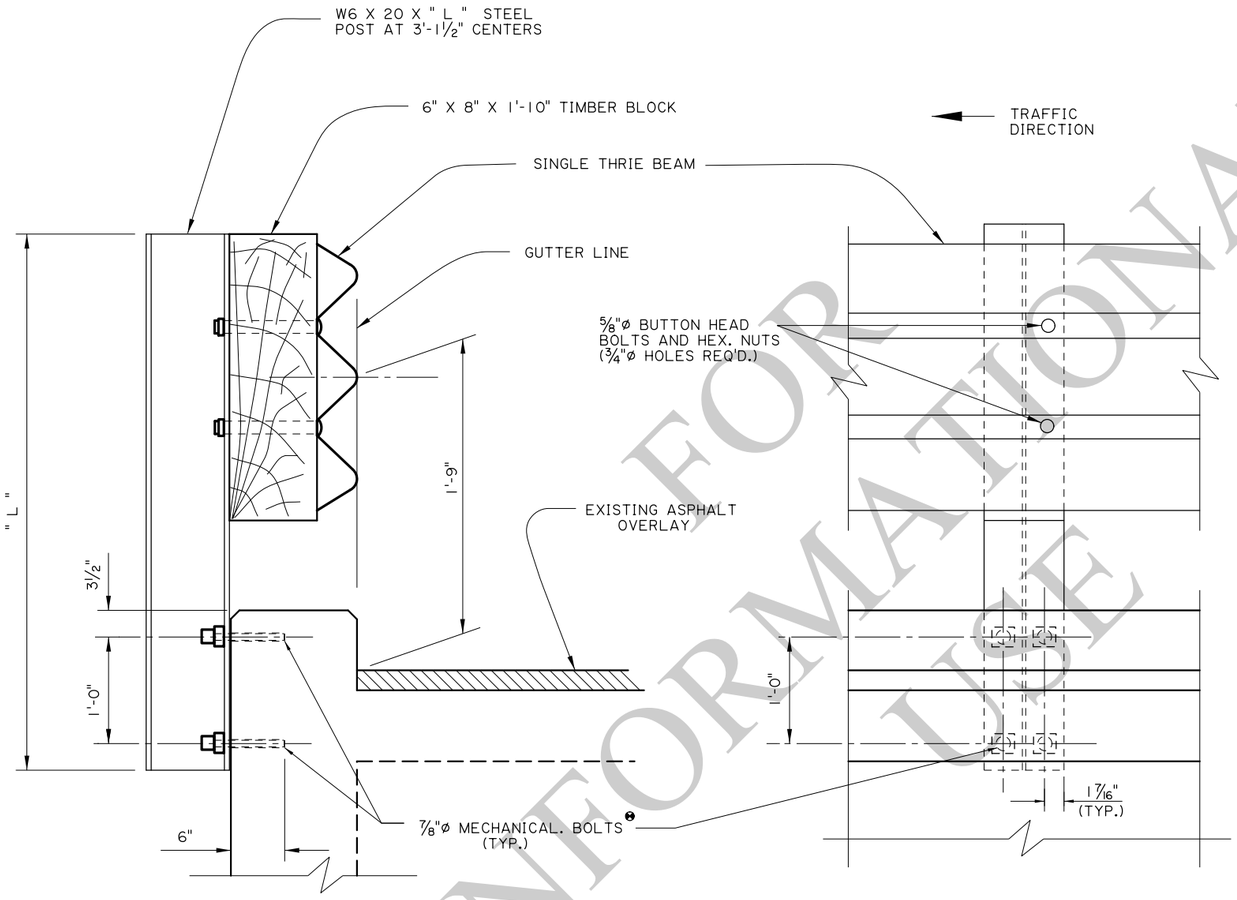

SECTION THRU RAIL

VIEW FROM ROADWAY

NOTES

FOR ADDITIONAL INFORMATION ON GUARD RAIL, SEE STANDARD PLANS FOR HIGHWAY GUARD RAIL (MASH).

ALL WORK AND MATERIALS REQ'D. TO INSTALL GUARD RAIL ON BOX CULVERTS SHALL BE PAID FOR UNDER ITEM 704-01-01000 GUARD RAIL (SINGLE THRIE BEAM) (3'-1½" POST SPACING).

GUARD RAIL SPLICES SHALL BE MADE AT POST LOCATIONS ONLY. LAP IN DIRECTION OF TRAFFIC.

❷ USE ⅞"ø MECHANICAL SYSTEM AS LISTED ON DOTD APPROVED MATERIALS LIST, PRODUCT CATEGORY "CONCRETE ANCHOR SYSTEMS." PLACE BOLT IN HOLES IMMEDIATELY AND WAIT FOR MANUFACTURERS CURE TIME.

ALL STRUCTURAL STEEL SHALL BE ASTM A-36 AND GALVANIZED. ALL ⅝"ø BOLTS SHALL BE ASTM A307.

THIS DETAIL WAS DEVELOPED AND APPROVED FOR USE UNDER NCHRP REPORT 350. AS PER LADOTD'S MASH IMPLEMENTATION POLICY, ITS CONTINUED USE IS ALLOWED WHILE A MASH ALTERNATIVE IS DEVELOPED OR EVALUATED.

FOR INFORMATIONAL USE

SHEET NUMBER

PARISH	CONTROL SECTION	STATE PROJECT

DESIGN	P. FOSSIER
CHECK	C. GAUDRY
DETAIL	J. DOUCET
CHECK	P. FOSSIER
REVIEW	K. BRAUNER
SERIES #	1 OF 1

APPROVED BY CHIEF ENGINEER: DATE: 6/29/2026

NO.	DATE	REVISION OR CHANGE ORDER DESCRIPTION	BY

SIDE MOUNT GUARD RAIL (FOR BOX CULVERTS)

GRR-01

DOTD LOUISIANA DEPARTMENT OF TRANSPORTATION & DEVELOPMENT

STANDARD PLAN

IP_PWP:d1274117\GRR-01.dgn

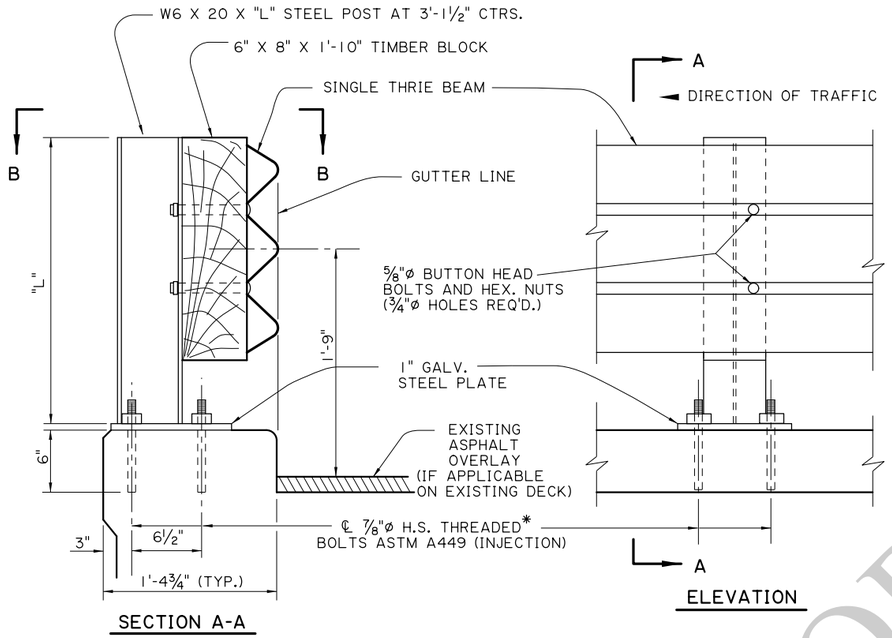

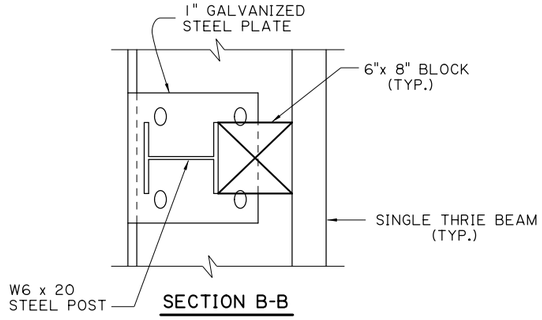

SECTION B-B

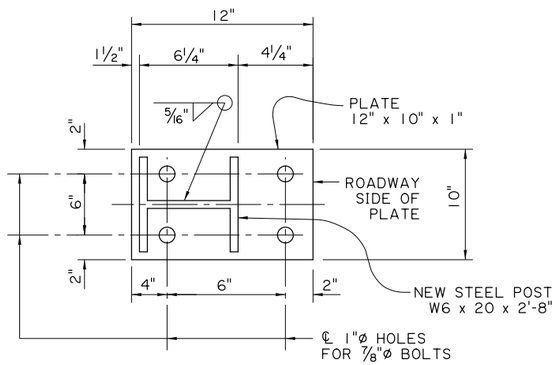

BASE PLATE
FOR POST ASSEMBLY
12" x 10" x 1" STEEL

NOTES

FOR ADDITIONAL INFORMATION ON GUARD RAIL, SEE STANDARD PLANS FOR HIGHWAY GUARD RAIL (MASH).

ALL WORK AND MATERIALS REQ'D. TO INSTALL GUARD RAIL ON BOX CULVERTS SHALL BE PAID FOR UNDER ITEM 704-01-01000 GUARD RAIL (SINGLE THRIE BEAM) (3'-1½" POST SPA.)

GUARD RAIL SPLICES SHALL BE MADE AT POST LOCATIONS ONLY. LAP IN DIRECTION OF TRAFFIC.

* DRILL 1"ø HOLES, 6" DEEP FOR ⅞"ø GALVANIZED BOLT. USE ⅞" GALVANIZED NUT WITH GALVANIZED CUT WASHER.

ALL HOLES DRILLED INTO AN EXISTING CONCRETE STRUCTURE SHALL BE CLEANED WITH COMPRESSED AIR AND MADE FREE OF ANY OIL OR RESIDUE. HOLES SHALL BE FILLED WITH ⅞"ø INJECTION SYSTEM AS LISTED ON APPROVED MATERIALS LIST, PRODUCT CATEGORY "CONCRETE ANCHOR SYSTEMS." PLACE BOLT IN HOLE IMMEDIATELY AND WAIT FOR MANUFACTURERS CURE TIME.

ALL STRUCTURAL STEEL SHALL BE ASTM A-36 AND GALVANIZED. ALL ⅝"ø BOLTS SHALL BE ASTM A307.

THIS DETAIL WAS DEVELOPED AND APPROVED FOR USE UNDER NCHRP REPORT 350. AS PER LADOTD'S MASH IMPLEMENTATION POLICY, ITS CONTINUED USE IS ALLOWED WHILE A MASH ALTERNATIVE IS DEVELOPED OR EVALUATED.

FOR INFORMATIONAL USE

SHEET NUMBER

PARISH	CONTROL SECTION	STATE PROJECT

DESIGN	P. FOSSIER	DETAIL	J. DOUCET	REVIEW	K. BRAUNER
CHECK	C. GAUDRY	CHECK	P. FOSSIER	SERIES	1 OF 1

APPROVED BY CHIEF ENGINEER: DATE: 6/24/2026

NO.	DATE	REVISION OR CHANGE ORDER DESCRIPTION	BY

TOP MOUNTED GUARD RAIL (FOR BOX CULVERTS)

GRR-02

DOTD LOUISIANA DEPARTMENT OF TRANSPORTATION & DEVELOPMENT

STANDARD PLAN

10:3 6/11/2026
IP_PWP:d1274117\GRR-02.dgn

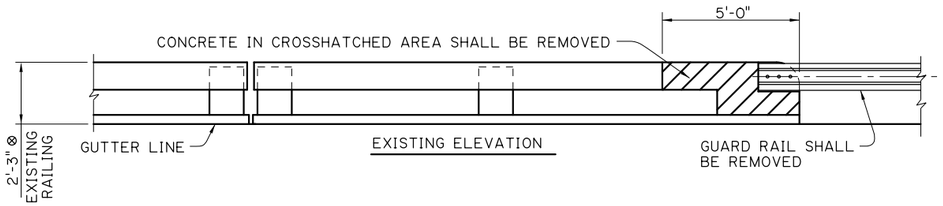

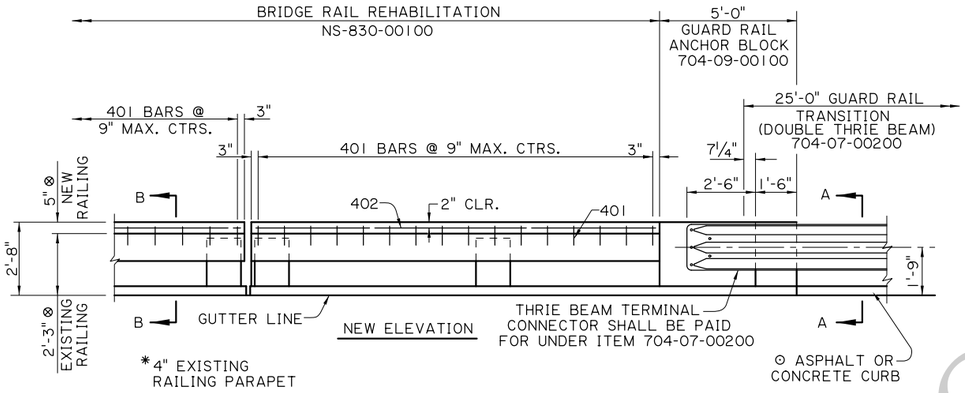

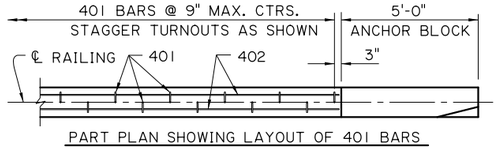

PART PLAN SHOWING LAYOUT OF 401 BARS

NOTE: HOLES FOR 401 BARS SHALL BE DRILLED ON ℄ RAIL

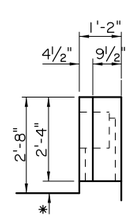

SECTION A-A
(THRIE BEAM NOT SHOWN FOR CLARITY)

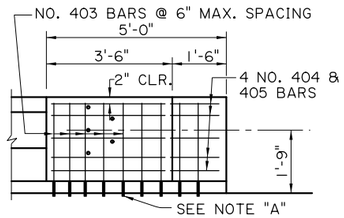

ANCHOR BLOCK ELEVATION

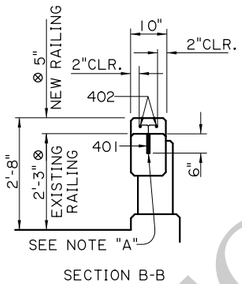

SECTION B-B

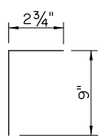

401 BARS
(2" DIA. PIN)

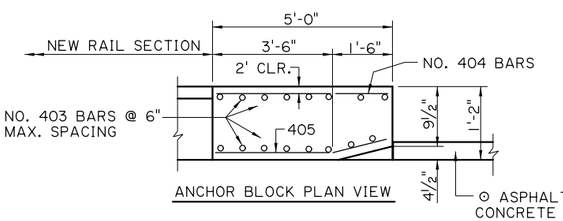

ANCHOR BLOCK PLAN VIEW

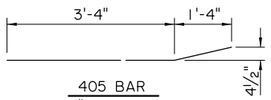

405 BAR
(2" DIA. PIN)

GENERAL NOTES

FOR ADDITIONAL INFORMATION ON GUARD RAIL, SEE STANDARD PLANS FOR HIGHWAY GUARD RAIL (MASH).

ALL DIMENSIONS SHALL BE VERIFIED IN THE FIELD BY THE CONTRACTOR AND APPROVED BY THE PROJECT ENGINEER.

⊙ FOR CURB & TRANSITION INFORMATION, SEE STANDARD PLANS FOR HIGHWAY GUARD RAIL (MASH), SHEET 3 OF 11.

⊗ 2'-3" & 5" DIMENSIONS MAY VARY.

BARRIER RAIL REHABILITATION

ALL WORK AND MATERIALS REQUIRED TO RAISE THE EXISTING BARRIER RAIL TO THE REQUIRED HEIGHT OF 2'-8" SHALL BE PAID FOR UNDER: BARRIER RAIL REHABILITATION, PER LIN. FT.

GUARD RAIL ANCHOR BLOCKS

ALL WORK AND MATERIALS REQUIRED TO REMOVE EXISTING RAILING AND CONSTRUCT THE ANCHOR BLOCK SHALL BE PAID FOR UNDER: GUARD RAIL ANCHOR BLOCK, PER EACH, ITEM 704-09-00100

CONCRETE IN CROSS HATCHED AREA SHALL BE REMOVED. THE EXISTING REINFORCING STEEL SHALL REMAIN IN PLACE AND SHALL BE CLEANED AND STRAIGHTENED TO THE SATISFACTION OF THE PROJECT ENGINEER BEFORE POURING NEW CONCRETE.

CONCRETE

NEW CONCRETE SHALL BE CLASS "A1".

NOTE "A"

NO. 401 & 403 BARS SET IN ¾"ø DRILLED HOLES. CLEAN HOLES WITH COMPRESSED AIR AND MAKE THEM FREE OF ANY OIL OR RESIDUE. FILL HOLES WITH A TYPE IV, GRADE 2 OR 3 EPOXY LISTED ON THE APPROVED MATERIALS LIST, PRODUCT CATEGORY "EPOXY RESIN SYSTEMS". PLACE BARS IN HOLES AND WAIT THE MANUFACTURER'S CURE TIME BEFORE POURING NEW CONCRETE.

THIS DETAIL WAS DEVELOPED AND APPROVED FOR USE UNDER NCHRP REPORT 350. AS PER LADOTD'S MASH IMPLEMENTATION POLICY, ITS CONTINUED USE IS ALLOWED WHILE A MASH ALTERNATIVE IS DEVELOPED OR EVALUATED.

FOR INFORMATIONAL USE

SHEET NUMBER

PARISH | CONTROL SECTION | STATE PROJECT

DESIGN P. FOSSIER | CHECK C. GAUDRY | DETAIL J. DOUCET | CHECK P. FOSSIER | REVIEW K. BRAUNER | SERIES # 1 OF 1

APPROVED BY CHIEF ENGINEER: DATE: 6/24/2026

NO.	DATE	REVISION OR CHANGE ORDER DESCRIPTION	BY

STATE OF LOUISIANA

ANCHOR BLOCK & BRIDGE RAIL REHABILITATION FOR LOW CONCRETE POST AND RAIL

GRR-03

DOTD LOUISIANA DEPARTMENT OF TRANSPORTATION & DEVELOPMENT

STANDARD PLAN

10:3 6/11/2026 IP_PWP:d1274117\GRR-03.dgn

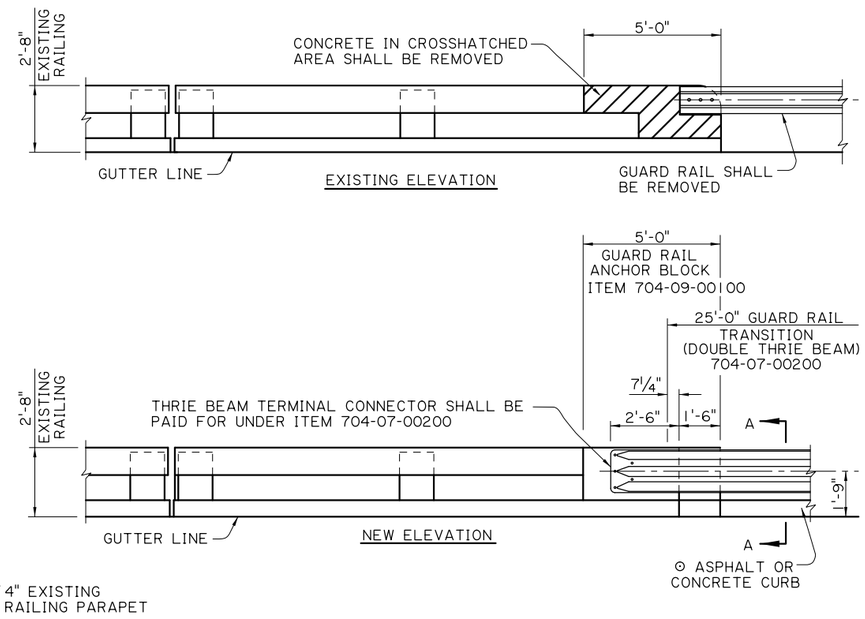

*4" EXISTING RAILING PARAPET

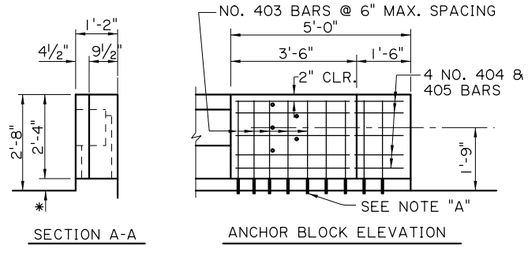

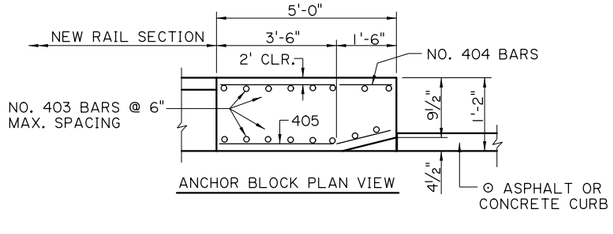

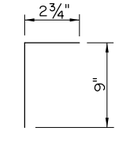

401 BARS
(2" DIA. PIN)

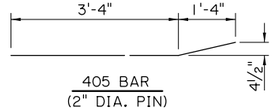

405 BAR
(2" DIA. PIN)

GENERAL NOTES

FOR ADDITIONAL INFORMATION ON GUARD RAIL, SEE STANDARD PLANS FOR HIGHWAY GUARD RAIL (MASH).

ALL DIMENSIONS SHALL BE VERIFIED IN THE FIELD BY THE CONTRACTOR AND APPROVED BY THE PROJECT ENGINEER.

⊙ FOR CURB & TRANSITION INFORMATION, SEE STANDARD PLANS FOR HIGHWAY GUARD RAIL (MASH), SHEET 3 OF 11.

GUARD RAIL ANCHOR BLOCKS

ALL WORK AND MATERIALS REQUIRED TO REMOVE EXISTING RAILING AND CONSTRUCT THE ANCHOR BLOCK SHALL BE PAID FOR UNDER: GUARD RAIL ANCHOR BLOCK, PER EACH, ITEM 704-09-00100

CONCRETE IN CROSS HATCHED AREA SHALL BE REMOVED. THE EXISTING REINFORCING STEEL SHALL REMAIN IN PLACE AND SHALL BE CLEANED AND STRAIGHTENED TO THE SATISFACTION OF THE PROJECT ENGINEER BEFORE POURING NEW CONCRETE. THE REINFORCING STEEL IN THE 1'-6" X 4½" SLOT MAY BE CUT OR BENT TO ACCOMMODATE THIS SLOT.

NOTE "A"

NO. 401 & 403 BARS SET IN ¾"ø DRILLED HOLES. CLEAN HOLES WITH COMPRESSED AIR AND MAKE THEM FREE OF ANY OIL OR RESIDUE. FILL HOLES WITH A TYPE IV, GRADE 2 OR 3 EPOXY LISTED ON THE APPROVED MATERIALS LIST, PRODUCT CATEGORY "EPOXY RESIN SYSTEMS". PLACE BARS IN HOLES AND WAIT THE MANUFACTURER'S CURE TIME BEFORE POURING NEW CONCRETE.

THIS DETAIL WAS DEVELOPED AND APPROVED FOR USE UNDER NCHRP REPORT 350. AS PER LADOTD'S MASH IMPLEMENTATION POLICY, ITS CONTINUED USE IS ALLOWED WHILE A MASH ALTERNATIVE IS DEVELOPED OR EVALUATED.

FOR INFORMATIONAL USE

SHEET NUMBER

PARISH	CONTROL SECTION	STATE PROJECT

DESIGN	P. FOSSIER	DETAIL	J. DOUCET	REVIEW	K. BRAUNER
CHECK	C. GAUDRY	CHECK	P. FOSSIER	SERIES #	1 OF 1

APPROVED BY CHIEF ENGINEER: DATE: 6/24/2026

NO.	DATE	REVISION OR CHANGE ORDER DESCRIPTION	BY

STATE OF LOUISIANA DEPARTMENT OF TRANSPORTATION AND DEVELOPMENT

GUARD RAIL ANCHOR BLOCK REHABILITATION FOR CONCRETE POST & RAIL (ALTERNATE 1)

GRR-04

DOTD LOUISIANA DEPARTMENT OF TRANSPORTATION & DEVELOPMENT

STANDARD PLAN

6/11/2026 10:3
IP_PWP:d1274117\GRR-04.dgn

08:5
10/1/2025
IP_PWP:d1226719\BD.2.6.5.2.05 - full-size guard rail brehab2a2 (MASH)(vector).dgn

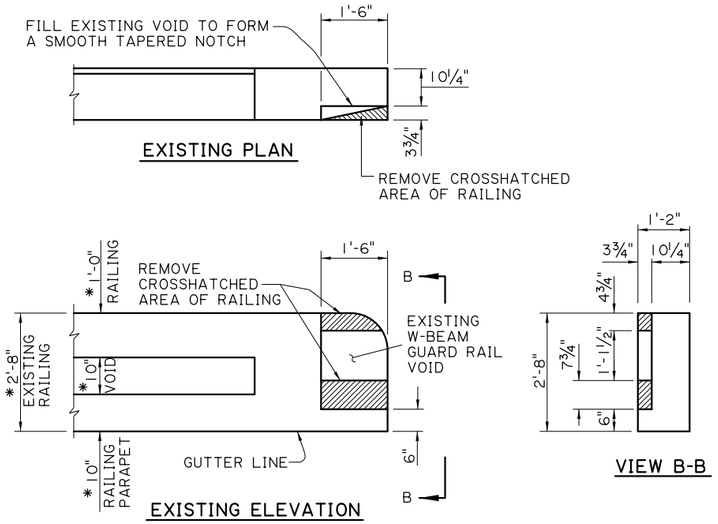

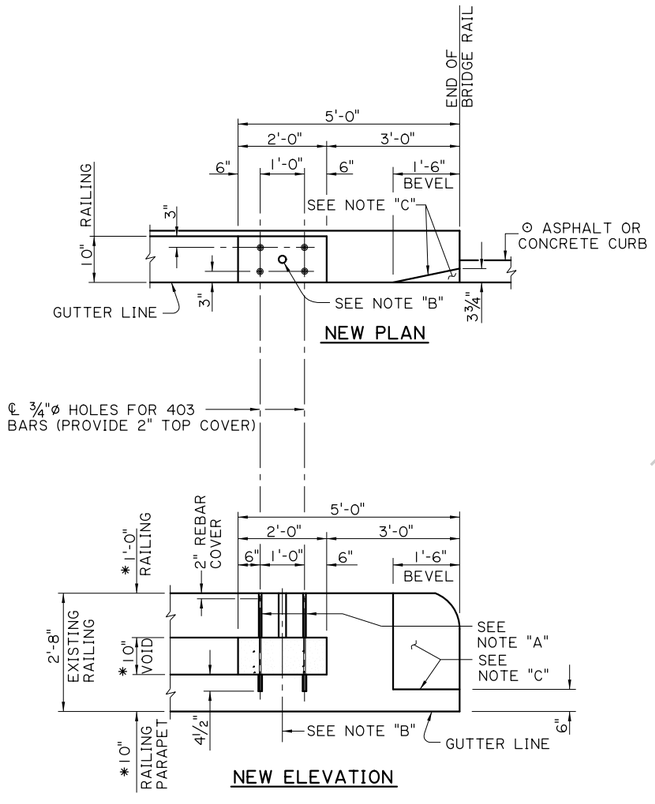

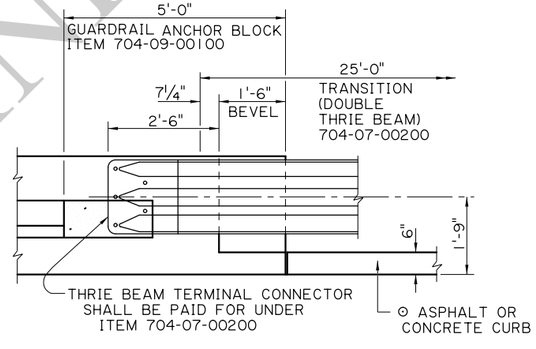

GENERAL NOTES

FOR ADDITIONAL INFORMATION ON GUARD RAILS, SEE STANDARD PLANS FOR HIGHWAY GUARD RAIL (MASH).

* THESE DIMENSIONS MAY VARY. THE NON-SHRINK GROUT QUANTITY AND 403 BAR LENGTH SHALL BE ADJUSTED ACCORDINGLY.

ALL DIMENSIONS SHALL BE VERIFIED IN THE FIELD BY THE CONTRACTOR AND APPROVED BY THE PROJECT ENGINEER.

⊙ FOR CURB & TRANSITION, SEE STANDARD PLANS FOR HIGHWAY GUARD RAIL (MASH), SHEET 3 OF 11.

GUARD RAIL ANCHOR BLOCKS

ALL WORK AND MATERIALS REQUIRED TO MODIFY EXISTING RAILING SHALL BE PAID FOR UNDER: GUARD RAIL ANCHOR BLOCK, PER EACH, ITEM 704-09-00100.

NOTE "A"

DRILL ¾"ø HOLES THROUGH THE RAILING AND INTO THE RAILING PARAPET AS SHOWN. CLEAN HOLES WITH COMPRESSED AIR TO REMOVE ALL OIL AND RESIDUE. FILL HOLES WITH A TYPE IV, GRADE 2 OR 3 EPOXY LISTED ON THE APPROVED MATERIALS LIST, PRODUCT CATEGORY "EPOXY RESIN SYSTEMS". PLACE 403 BARS (2'-2" LONG) IN HOLES AND WAIT THE MANUFACTURER'S CURE TIME BEFORE POURING NEW CONCRETE.

NOTE "B"

DRILL A 2"ø HOLE THROUGH THE DEPTH OF RAILING. FILL VOID BETWEEN RAILING AND RAILING PARAPET THROUGH THE 2"ø HOLE WITH AN APPROVED FLOWABLE NON-SHRINK GROUT LISTED ON APPROVED MATERIALS LIST, PRODUCT CATEGORY "NON-SHRINK GROUT."

NOTE "C"

Ⓐ AFTER REMOVING THE EXISTING CONCRETE TO CONSTRUCT THE 1'-6" BEVEL FULL HEIGHT, PREPARE THE VERTICAL SURFACE OF THE EXISTING VOID FOR AN EPOXY RESIN JOINT ACCORDING TO THE SPECIFICATIONS AND PLACE CONCRETE IN VOID. REDRESS AND FORM THE ENTIRE SURFACE OF THE BEVEL TO GIVE A SMOOTH APPEARANCE BY USING A FLOWABLE NON-SHRINK GROUT LISTED ON APPROVED MATERIALS LIST, PRODUCT CATEGORY "NON-SHRINK GROUT."

THIS DETAIL WAS DEVELOPED AND APPROVED FOR USE UNDER NCHRP REPORT 350. AS PER LADOTD'S MASH IMPLEMENTATION POLICY, ITS CONTINUED USE IS ALLOWED WHILE A MASH ALTERNATIVE IS DEVELOPED OR EVALUATED.

FOR INFORMATIONAL USE

SHEET NUMBER

PARISH	CONTROL SECTION	STATE PROJECT

DESIGN	P. FOSSIER
CHECK	C. GAUDRY
DETAIL	J. DOUCET
CHECK	P. FOSSIER
REVIEW	K. BRAUNER
SERIES #	

APPROVED BY CHIEF ENGINEER: DATE: 10/14/2025

NO.	DATE	REVISION OR CHANGE ORDER DESCRIPTION	SRB REFERENCE	BY
4	9/16/25	REMOVED 2016 LSSRB REFERENCE		CMG

GUARD RAIL ANCHOR BLOCK REHABILITATION FOR CONCRETE POST & RAIL (ALTERNATE 2)

GRR-05

DOTD LOUISIANA DEPARTMENT OF TRANSPORTATION & DEVELOPMENT

STANDARD PLAN

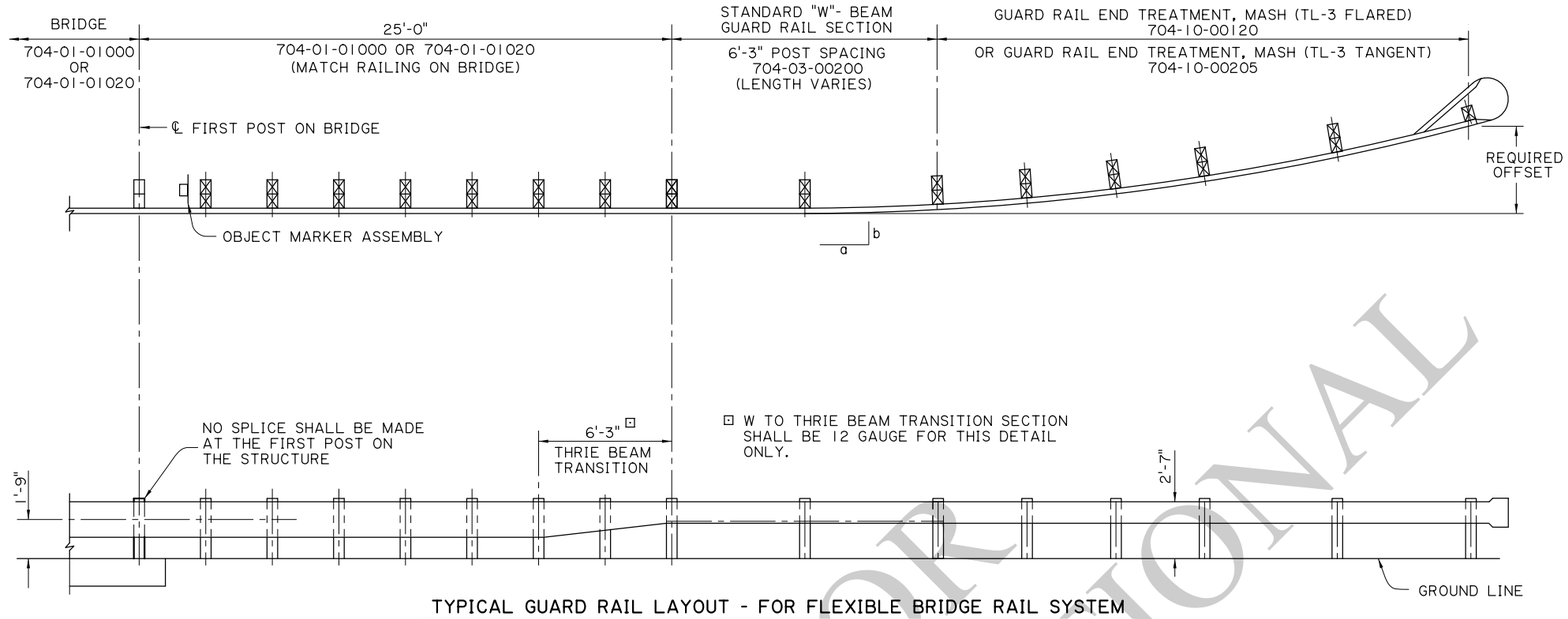

TYPICAL GUARD RAIL LAYOUT - FOR FLEXIBLE BRIDGE RAIL SYSTEM

NOTES

LAYOUTS SHOWN ARE FOR BRIDGE STRUCTURES WHICH HAVE FLEXIBLE BRIDGE RAILING.

FOR ADDITIONAL INFORMATION ON GUARD RAILS, SEE STANDARD PLANS FOR HIGHWAY GUARD RAIL (MASH).

THIS DETAIL WAS DEVELOPED AND APPROVED FOR USE UNDER NCHRP REPORT 350. AS PER LADOTD'S MASH IMPLEMENTATION POLICY, ITS CONTINUED USE IS ALLOWED WHILE A MASH ALTERNATIVE IS DEVELOPED OR EVALUATED.

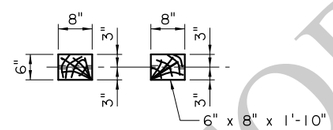

PLAN

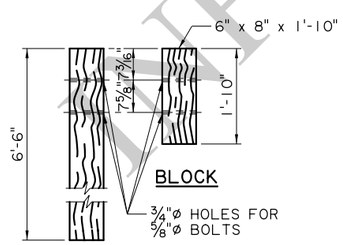

BLOCK

POST

WOOD POST AND WOOD BLOCK FOR
STANDARD THRIE BEAM GUARD RAIL

N.T.S.

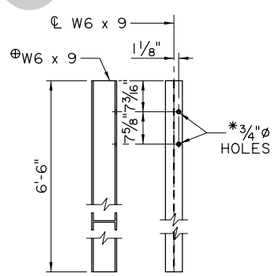

SIDE FRONT

STEEL POST

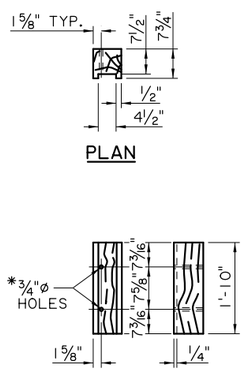

PLAN

FRONT SIDE

WOOD BLOCK

STEEL POST AND ROUTED WOOD BLOCK
FOR STANDARD THRIE BEAM GUARD RAIL

N.T.S.

⊕ A W6 x 8.5 STEEL POST MAY BE USED AS AN ALTERNATE FOR A W6 x 9 POST.

* POST AND BLOCK HOLES SHALL BE DRILLED ADJACENT TO THE DIRECTION OF THE TRAFFIC.

FOR INFORMATIONAL USE

SHEET NUMBER

PARISH | CONTROL SECTION | STATE PROJECT

DESIGN P. FOSSIER | DETAIL J. DOUCET | REVIEW K. BRAUNER

CHECK C. GAUDRY | CHECK P. FOSSIER | SERIES # 1 OF 1

APPROVED BY CHIEF ENGINEER: DATE: 6/24/2026

NO.	DATE	REVISION OR CHANGE ORDER DESCRIPTION	BY

STATE OF LOUISIANA

APPROACH GUARD RAIL FOR STRUCTURES WITH FLEXIBLE RAILS

GRR-06

DOTD LOUISIANA DEPARTMENT OF TRANSPORTATION & DEVELOPMENT

STANDARD PLAN

10:5 6/11/2026
IP_PWP:d1274117\GRR-06.dgn

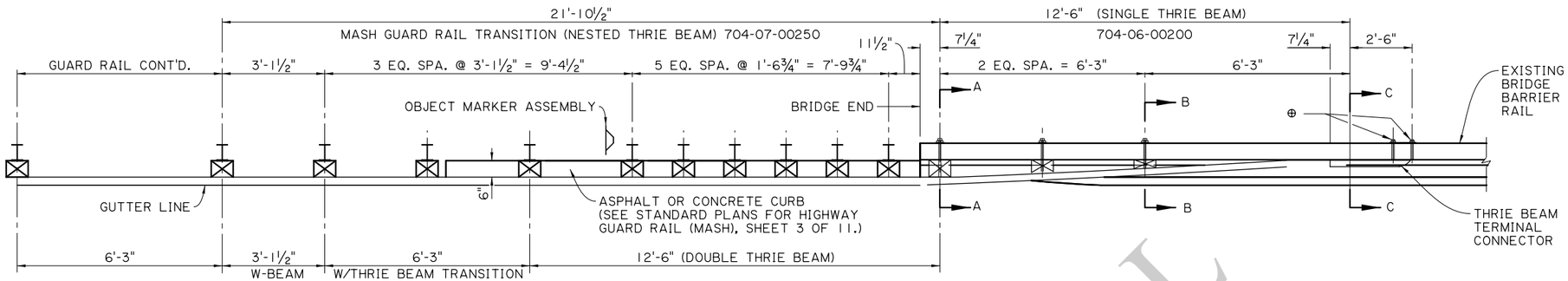

PLAN VIEW

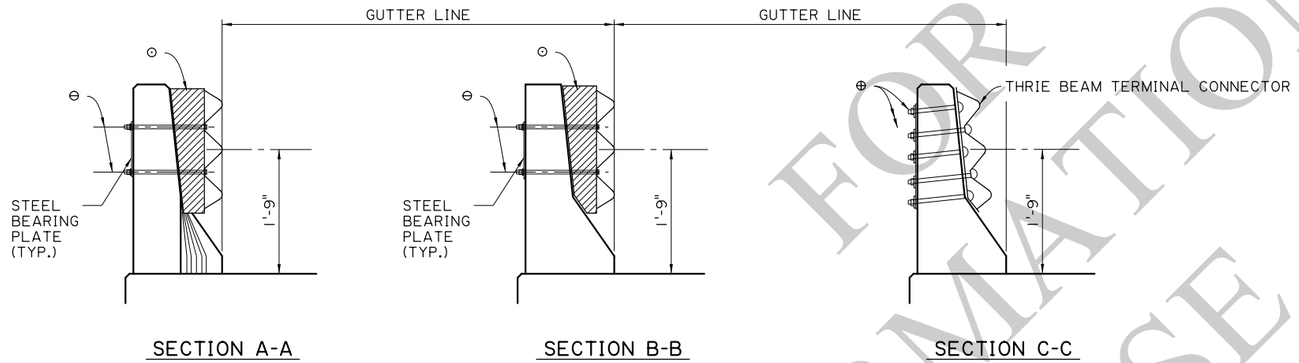

SECTION A-A

SECTION B-B

SECTION C-C

⊕ 5 - ⅞"ø H.S. ASTM A449 HEX THROUGH BOLTS WITH ⅝" BEARING PLATE (SEE STANDARD PLANS FOR HIGHWAY GUARD RAIL (MASH), SHEET 9 OF 11.)

⊖ 2 - ⅝"ø BUTTON HEAD BOLTS WITH ⅝" BEARING PLATE, NUTS, & WASHERS

⊙ 6" x 8" x 1'-10" TREATED TIMBER BLOCK (CUT & SHAPE IN THE FIELD TO FIT).

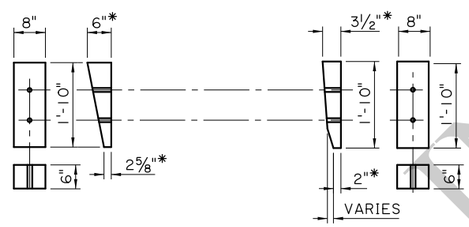

SHIM BLOCK FOR SECTION A-A

SHIM BLOCK FOR SECTION B-B

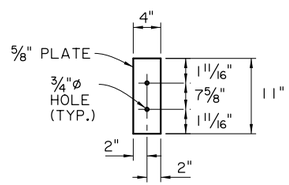

STEEL BEARING PLATE

* DIMENSIONS ARE ASSUMED. ADJUST IN THE FIELD AS REQUIRED. HOLES SHALL BE DRILLED IN THE FIELD. SEE NOTE NO. 8.

NOTES:

1. FOR ADDITIONAL INFORMATION ON GUARD RAIL TRANSITION, SEE STANDARD PLANS FOR HIGHWAY GUARD RAIL (MASH), SHEET 3 OF 11.
2. ALL HARDWARE AND TIMBER USED FOR CONNECTING THE SINGLE THRIE BEAM TO THE EXISTING BRIDGE RAIL SHALL BE PAID FOR UNDER ITEM 704-06-00200, GUARD RAIL BRIDGE ATTACHMENTS (SINGLE THRIE BEAM), PER LIN. FT.
3. ANY DAMAGE DONE TO THE EXISTING STRUCTURE DURING INSTALLATION OF THE GUARD RAIL SHALL BE REPAIRED AT THE CONTRACTORS EXPENSE AND TO THE SATISFACTION OF THE PROJECT ENGINEER.
4. GALV. STEEL OGEE WASHER MAY BE USED IN LIEU OF THE STEEL BEARING PLATE.
5. ALL H.S. BOLTS SHALL BE ASTM A449. ALL 5#8"1#64 BOLTS SHALL BE ASTM A307.
6. A 25'-0" SECTION OF THRIE BEAM RAIL (WITH NO SPLICE) SHALL BE INSTALLED SYMMETRICALLY WITH RESPECT TO THE FIRST TIMBER BLOCK USED AT THE END OF THE STRUCTURE.
7. THE WOOD SHIM BLOCKS SHALL BE CUT & SHAPED IN THE FIELD TO FIT THE LOCATION WITH A SNUG FIT.
8. THE BOLT HOLES SHALL BE FIELD DRILLED THRU THE GUARD RAIL, SHIM BLOCKS AND THE BARRIER RAIL AT THE SAME TIME.
9. THE GUARD RAIL SHALL NOT PROTRUDE BEYOND THE GUTTER LINE.
10. THIS DETAIL WAS DEVELOPED AND APPROVED FOR USE UNDER NCHRP REPORT 350. AS PER LADOTD'S MASH IMPLEMENTATION POLICY, ITS CONTINUED USE IS ALLOWED WHILE A MASH ALTERNATIVE IS DEVELOPED OR EVALUATED.

FOR INFORMATIONAL USE

SHEET NUMBER

PARISH | CONTROL SECTION | STATE PROJECT

DESIGN P. FOSSIER | CHECK K. BRAUNER | DETAIL J. DOUCET | CHECK P. FOSSIER | REVIEW C. GUIDRY | SERIES # 1 OF 1

APPROVED BY CHIEF ENGINEER: DATE: 6/29/2026

REVISION OR CHANGE ORDER DESCRIPTION | BY | NO. | DATE

STATE OF LOUISIANA DEPARTMENT OF TRANSPORTATION AND DEVELOPMENT

NEW JERSEY BARRIER RAIL RETROFIT (FOR STRUCTURES (GREATER THAN 60 FT.)

GRR-07

DOTD LOUISIANA DEPARTMENT OF TRANSPORTATION & DEVELOPMENT

STANDARD PLAN

LA DOTD STANDARDS

6/11/2026 10:5

IP_PWP:d1274117\GRR-07.dgn

6/11/2026 11:0

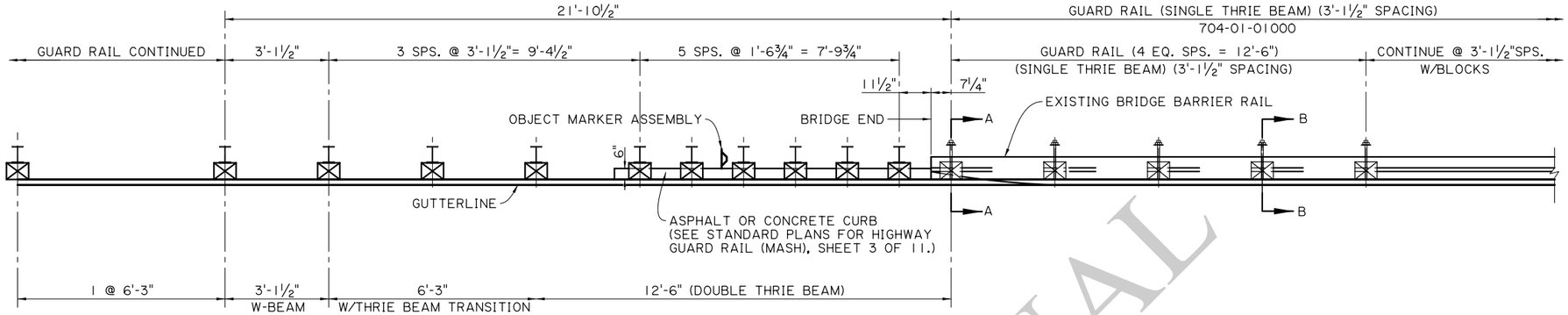

PLAN VIEW

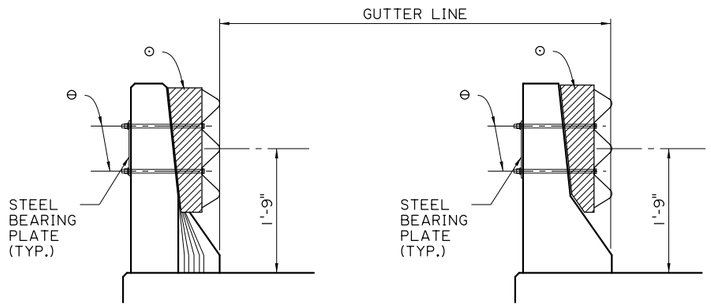

SECTION A-A

SECTION B-B

⊖ 2 - ⅝"ø BUTTON HEAD BOLTS WITH ⅝" BEARING PLATE, NUTS, & WASHERS. (TYP.)

⊙ 6" X 8" X 1'-10" TREATED TIMBER BLOCK (CUT & SHAPE IN THE FIELD TO FIT).

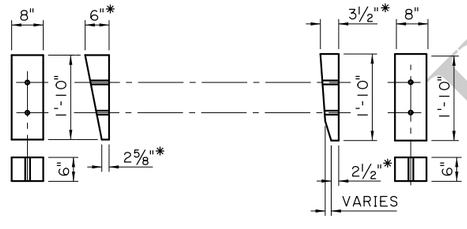

SHIM BLOCK FOR SECTION A-A

SHIM BLOCK FOR SECTION B-B

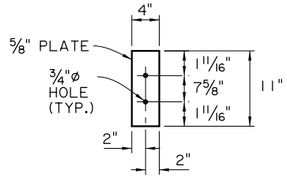

STEEL BEARING PLATE

* DIMENSIONS ARE ASSUMED. ADJUST IN THE FIELD AS REQUIRED. HOLES SHALL BE DRILLED IN THE FIELD. SEE NOTE NO. 8.

NOTES:

1. FOR ADDITIONAL INFORMATION ON GUARD RAIL TRANSITION, SEE STANDARD PLANS FOR HIGHWAY GUARD RAIL (MASH), SHEET 3 OF 11.
2. ALL HARDWARE AND TIMBER USED FOR CONNECTING THE SINGLE THRIE BEAM TO THE EXISTING BRIDGE RAIL SHALL BE PAID FOR UNDER ITEM 704-01-01000, GUARD RAIL (SINGLE THRIE BEAM), (3'-1½" POST SPACING) PER LIN. FT.
3. ANY DAMAGE DONE TO THE EXISTING STRUCTURE DURING INSTALLATION OF THE GUARD RAIL SHALL BE REPAIRED AT THE CONTRACTORS EXPENSE AND TO THE SATISFACTION OF THE PROJECT ENGINEER.
4. GALV. STEEL OGEE WASHER MAY BE USED IN LIEU OF THE STEEL BEARING PLATE.
5. ALL ⅝"ø BOLTS SHALL BE ASTM A307.
6. A 25'-0" SECTION OF GUARD RAIL (WITH NO SPLICE) SHALL BE INSTALLED SYMMETRICALLY WITH RESPECT TO THE FIRST POST ON EACH END OF THE STRUCTURE.
7. THE WOOD SHIM BLOCKS SHALL BE CUT & SHAPED IN THE FIELD TO FIT THE LOCATION WITH A SNUG FIT.
8. THE BOLT HOLES SHALL BE FIELD DRILLED THRU THE GUARD RAIL, SHIM BLOCKS AND THE BARRIER RAIL AT THE SAME TIME.
9. THE GUARD RAIL SHALL NOT PROTRUDE BEYOND THE GUTTER LINE.
10. THIS DETAIL WAS DEVELOPED AND APPROVED FOR USE UNDER NCHRP REPORT 350. AS PER LADOTD'S MASH IMPLEMENTATION POLICY, ITS CONTINUED USE IS ALLOWED WHILE A MASH ALTERNATIVE IS DEVELOPED OR EVALUATED.

FOR INFORMATIONAL USE

SHEET NUMBER

PARISH | CONTROL SECTION | STATE PROJECT

DESIGN P. FOSSIER | CHECK K. BRAUNER | DETAIL J. DOUCET | CHECK P. FOSSIER | REVIEW C. GUIDRY | SERIES # 1 OF 1

APPROVED BY CHIEF ENGINEER: DATE: 6/24/2026

NO.	DATE	REVISION OR CHANGE ORDER DESCRIPTION	BY

NEW JERSEY BARRIER RAIL RETROFIT (FOR STRUCURES LESS THAN 60 FT. LONG)

GRR-08

DOTD LOUISIANA DEPARTMENT OF TRANSPORTATION & DEVELOPMENT

STANDARD PLAN

IP_PWP:d1274117\GRR-08.dgn

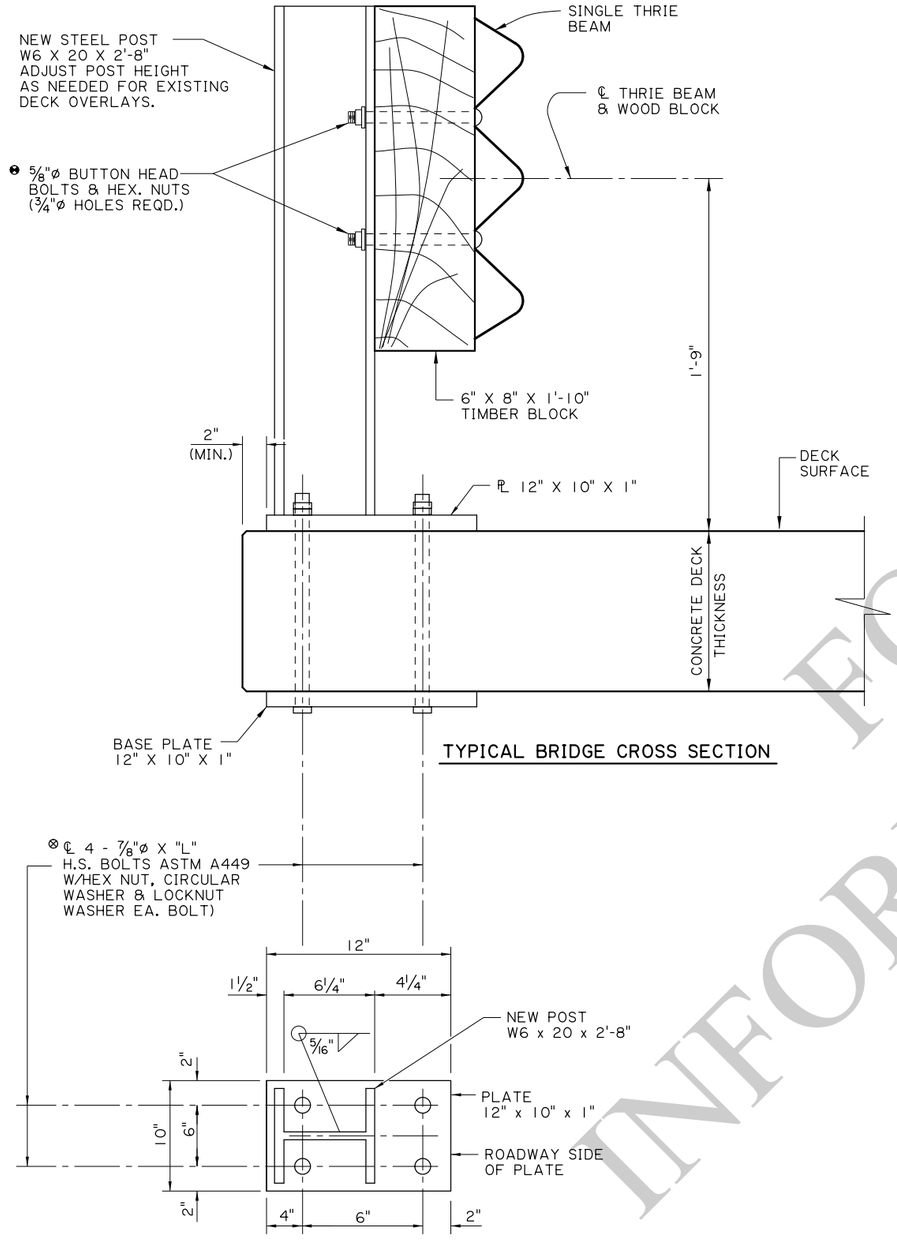

TYPICAL BRIDGE CROSS SECTION

BASE PLATE
FOR POST ASSEMBLY
12" x 10" x 1" STEEL

⊗ BOLTS LENGTH TO BE FIELD MEASURED AND ADJUSTED BASED ON ACTUAL DECK THICKNESS. SUBMIT TO DOTD BRIDGE DESIGN ENGINEER FOR REVIEW BEFORE INSTALLATION

NOTES

ALL HARDWARE INVOLVED SHALL BE REPLACED BY NEW HARDWARE.

FOR ADDITIONAL INFORMATION ON GUARD RAIL, SEE STANDARD PLANS FOR HIGHWAY GUARD RAIL (MASH).

ALL STRUCTURAL STEEL, POST AND PLATES, SHALL BE ASTM A-36 AND GALVANIZED. ALL 5/8"ø BOLTS SHALL BE ASTM A307.

❽ THE BOLTS IN THE GUARD RAIL SHALL BE LOCATED ON THE ONCOMING FLANGE TRAFFIC SIDE.

ALTHOUGH ITEM 704-01-01020 CALLS FOR 6'-3" MAX. POST SPACING, THE NEW POST FOR EXISTING PRECAST BRIDGES SHALL BE INSTALLED AT THE SAME LOCATION AS THE OLD ONES. ALL GUARD RAIL SPLICES SHALL BE MADE AT POST LOCATIONS ONLY.

ALL WORK AND MATERIALS REQUIRED TO INSTALL THE NEW GUARD RAIL SHALL BE PAID FOR UNDER ITEM 704-01-01020 GUARD RAIL (SINGLE THRIE BEAM) (6'-3" POST SPA.) PER LIN. FT.

THIS DETAIL WAS DEVELOPED AND APPROVED FOR USE UNDER NCHRP REPORT 350. AS PER LADOTD'S MASH IMPLEMENTATION POLICY, ITS CONTINUED USE IS ALLOWED WHILE A MASH ALTERNATIVE IS DEVELOPED OR EVALUATED.

FOR INFORMATIONAL USE

SHEET NUMBER

PARISH | CONTROL SECTION | STATE PROJECT

DESIGN P. FOSSIER | DETAIL J. DOUCET | REVIEW K. BRAUNER | SERIES # 1 OF 1
CHECK C. GAUDRY | CHECK P. FOSSIER

APPROVED BY CHIEF ENGINEER: DATE: 6/24/2026

NO.	DATE	REVISION OR CHANGE ORDER DESCRIPTION	BY

GUARD RAIL REHABILITATION
(FLAT DECK PRECAST BRIDGES)

GRR-09

DOTD LOUISIANA DEPARTMENT OF TRANSPORTATION & DEVELOPMENT

STANDARD PLAN

6/11/2026 11:0
IP_PWP:d1274117\GRR-09.dgn

6/11/2026 12:0

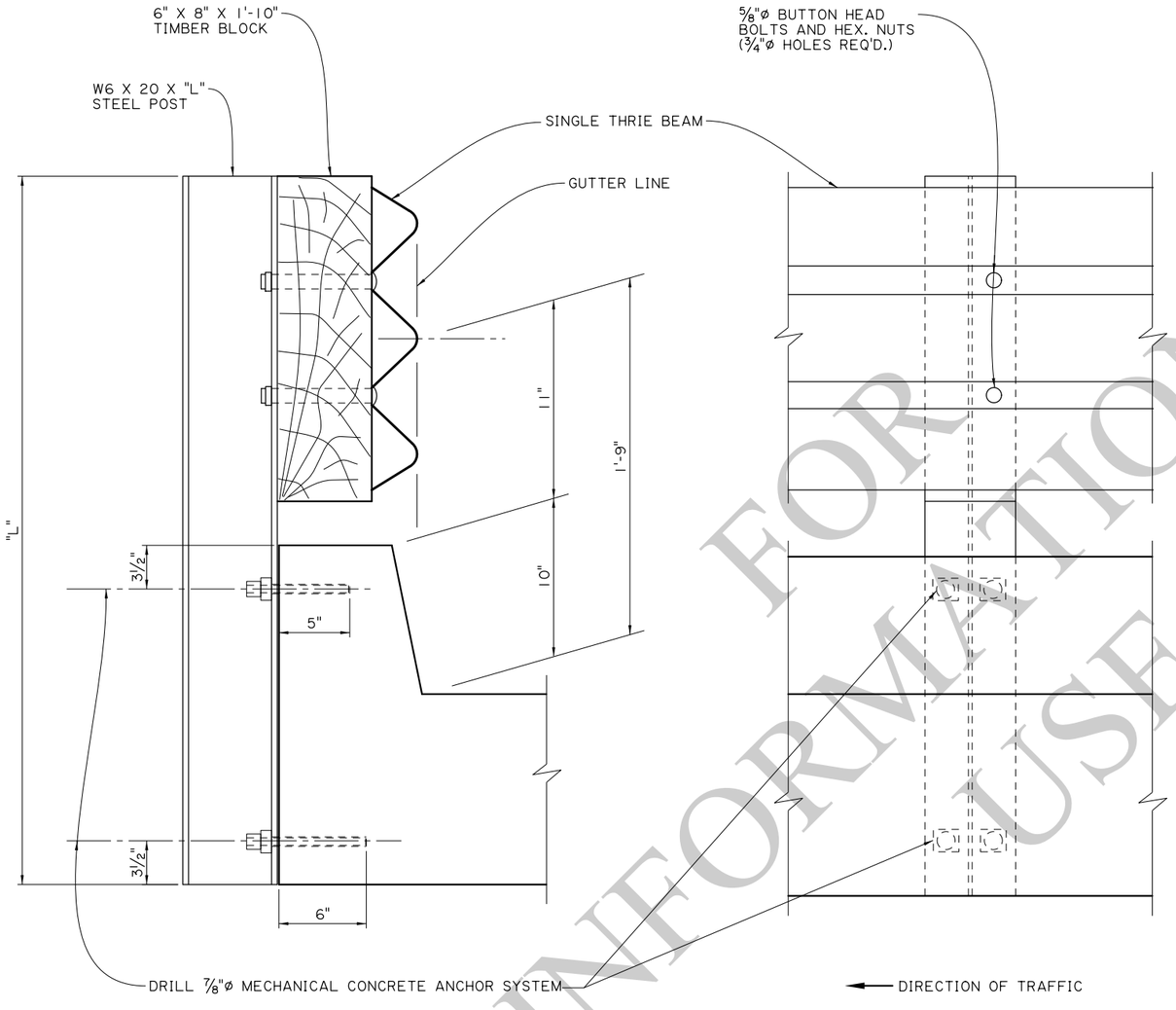

SECTION THRU RAIL

VIEW FROM ROADWAY

NOTES

FOR ADDITIONAL INFORMATION ON GUARD RAIL, SEE STANDARD PLANS FOR HIGHWAY GUARD RAIL (MASH).

ALL WORK AND MATERIALS REQ'D. TO INSTALL GUARD RAIL ON THIS TYPE STRUCTURE SHALL BE PAID FOR UNDER ITEM 704-01-01020 GUARD RAIL (SINGLE THRIE BEAM).

ALTHOUGH ITEM 704-01-01020 CALLS FOR 6'-3" POST SPACING, THE NEW POST ON THIS TYPE STRUCTURE SHALL BE PLACED IN THE SAME LOCATION AS THE EXISTING ONES.

GUARD RAIL SPLICES SHALL BE MADE AT POST LOCATIONS ONLY. LAP IN DIRECTION OF TRAFFIC.

USE 7/8"ø MECHANICAL SYSTEM AS LISTED ON APPROVED MATERIALS LIST, PRODUCT CATEGORY "CONCRETE ANCHOR SYSTEMS."

ALL STRUCTURAL STEEL SHALL BE ASTM A-36 AND GALVANIZED. ALL 5/8"ø BOLTS SHALL BE ASTM A307.

THIS DETAIL WAS DEVELOPED AND APPROVED FOR USE UNDER NCHRP REPORT 350. AS PER LADOTD'S MASH IMPLEMENTATION POLICY, ITS CONTINUED USE IS ALLOWED WHILE A MASH ALTERNATIVE IS DEVELOPED OR EVALUATED.

FOR INFORMATIONAL USE

SHEET NUMBER

PARISH	CONTROL SECTION	STATE PROJECT
DESIGN P. FOSSIER	DETAIL J. DOUCET	REVIEW K. BRAUNER
CHECK C. GAUDRY	CHECK P. FOSSIER	SERIES # 1 OF 1

APPROVED BY CHIEF ENGINEER: DATE: 6/24/2026

NO.	DATE	REVISION OR CHANGE ORDER DESCRIPTION	BY

SIDE MOUNTED GUARD RAIL FOR BRIDGES

GRR-10

DOTD LOUISIANA DEPARTMENT OF TRANSPORTATION & DEVELOPMENT

STANDARD PLAN

IP_PWP:d1274117\GRR-10.dgn

12:0
6/11/2026

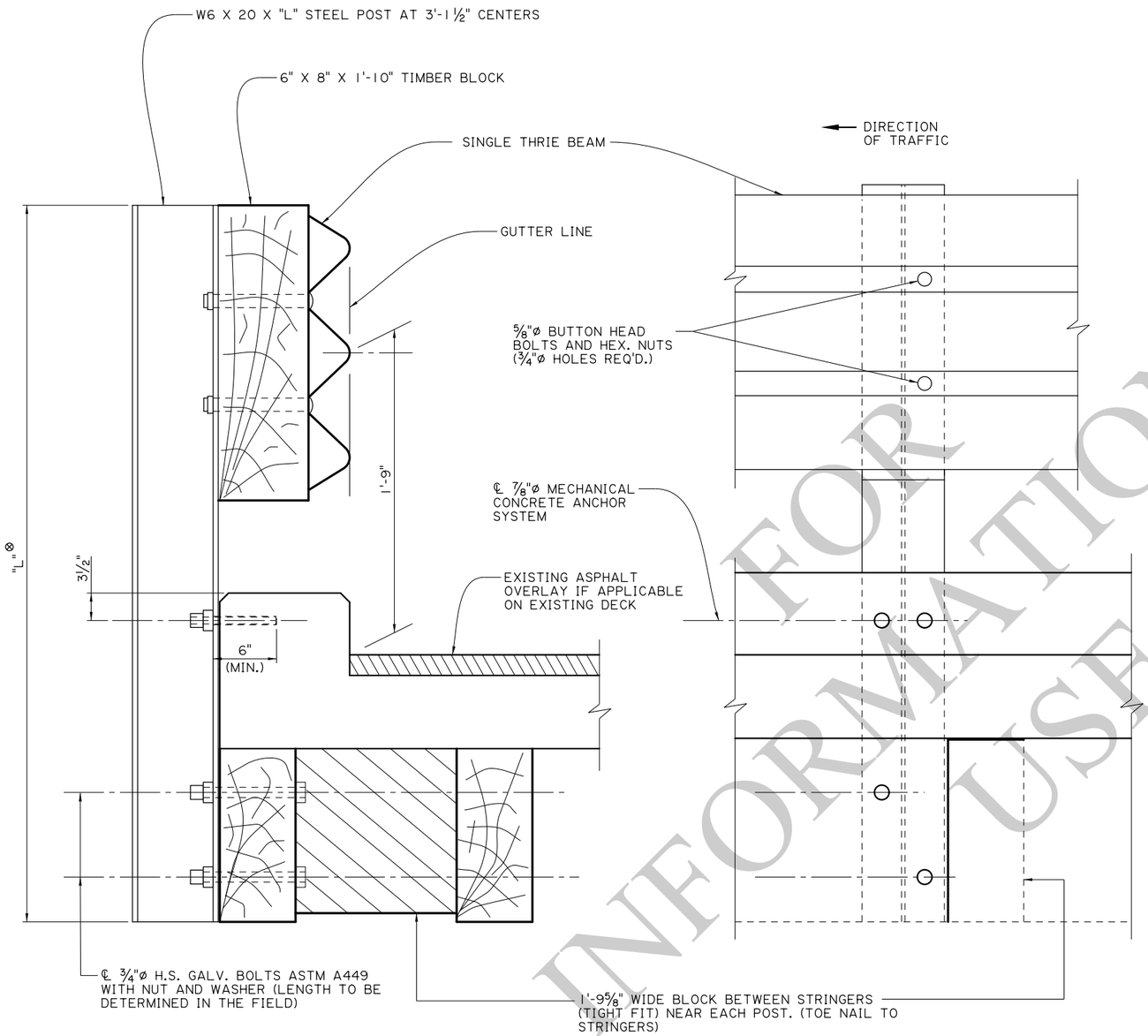

SECTION THRU RAIL

VIEW FROM ROADWAY

NOTES

FOR ADDITIONAL INFORMATION ON GUARD RAIL, SEE STANDARD PLANS FOR HIGHWAY GUARD RAIL (MASH).

ALL WORK AND MATERIALS REQ'D. TO INSTALL GUARD RAIL ON BRIDGE SHALL BE PAID FOR UNDER ITEM 704-01-01020 GUARD RAIL (SINGLE THRIE BEAM) (6'-3" POST SP.).

GUARD RAIL SPLICES SHALL BE MADE AT POST LOCATIONS ONLY. LAP IN DIRECTION OF TRAFFIC.

USE ⅞"ø MECHANICAL CONCRETE ANCHOR SYSTEM AS LISTED ON APPROVED MATERIALS LIST, PRODUCT CATEGORY "CONCRETE ANCHOR SYSTEMS."

ALL STEEL SHALL BE ASTM A-36 AND GALVANIZED.

ALL ⅝"ø BOLTS SHALL BE ASTM A307.

⊗ W6 x 20 POST TO BE FIELD MEASURED TO DETERMINE LENGTH "L" BY CONTRACTOR.

THIS DETAIL WAS DEVELOPED AND APPROVED FOR USE UNDER NCHRP REPORT 350. AS PER LADOTD'S MASH IMPLEMENTATION POLICY, ITS CONTINUED USE IS ALLOWED WHILE A MASH ALTERNATIVE IS DEVELOPED OR EVALUATED.

FOR INFORMATIONAL USE

SHEET NUMBER

PARISH	CONTROL SECTION	STATE PROJECT

DESIGN	P. FOSSIER	DETAIL	J. DOUCET	REVIEW	K. BRAUNER
CHECK	C. GAUDRY	CHECK	P. FOSSIER	SERIES #	1 OF 1

APPROVED BY CHIEF ENGINEER: DATE: 6/24/2026

NO.	DATE	REVISION OR CHANGE ORDER DESCRIPTION	BY

SIDE MOUNTED GUARD RAIL (CONCRETE DECK WITH TIMBER STRINGERS)

GRR-11

LOUISIANA DEPARTMENT OF TRANSPORTATION & DEVELOPMENT

STANDARD PLAN

IP_PWP:d1274117\GRR-11.dgn

⊖ 2" X 1'-0" NOTCH FOR DRAINAGE

⊕ 4" X 6" X LGTH. OF BRIDGE FELLOE GUARD (NEW) (NOTCH FOR DRAINAGE)

❶ 6⅞" SPIKE AT EACH FLOOR PLANK

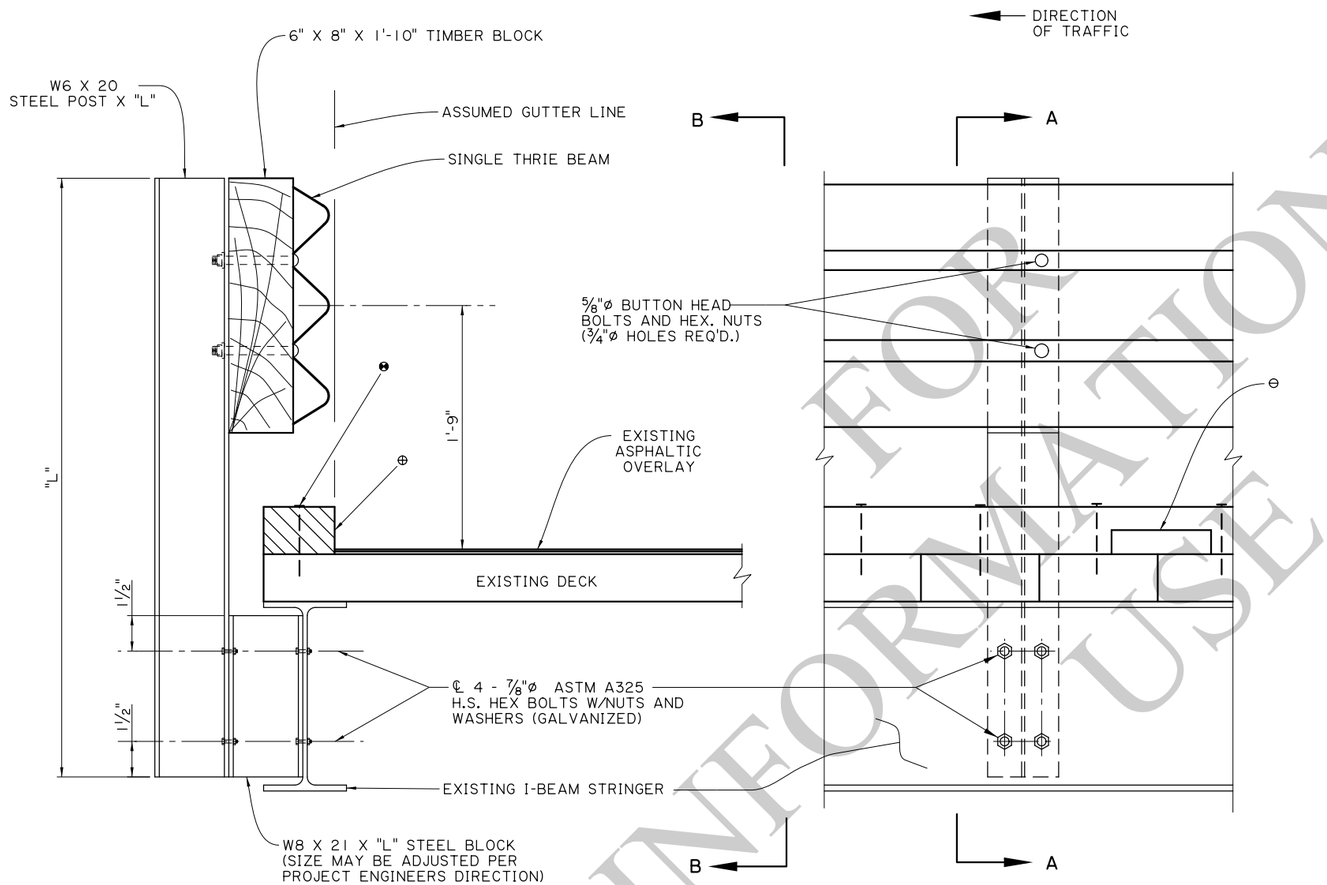

SECTION A-A

SECTION B-B

NOTES

ALL WORK AND MATERIAL (INCLUDING THE NEW FELLOE GUARD) REQUIRED TO INSTALL THE NEW BRIDGE RAIL SHALL BE PAID FOR UNDER ITEM 704-01-01020 GUARDRAIL (SINGLE THRIE BEAM) (6'-3" POST SPA.)

EXISTING ASPHALT SHALL BE CLEARED FROM AREA WHERE FELLOE GUARD IS TO BE PLACED SO THAT THE FELLOE GUARD WILL BE ON THE TIMBER DECK.

POST SHALL BE LOCATED AT EACH BENT AND AT INTERMEDIATE POINTS NOT TO EXCEED 6'-3" (EQUALLY SPACED)

IF DIRECTED BY THE PROJECT ENGINEER, A DIAPHRAGM SHALL BE PLACED AT EACH INTERMEDIATE POST BETWEEN THE FIRST AND SECOND STRINGER. (TO BE INCLUDED IN 704-01-01020.

"L" (POST HEIGHT & STEEL BLOCK) SHALL BE DETERMINED IN THE FIELD.

FOR ADDITIONAL INFORMATION ON GUARDRAIL, SEE STANDARD PLANS FOR HIGHWAY GUARD RAIL (MASH).

ALL STRUCTURAL STEEL SHALL BE ASTM A36 AND GALVANIZED. ALL ⅝"ø BOLTS SHALL BE ASTM A307.

THIS DETAIL WAS DEVELOPED AND APPROVED FOR USE UNDER NCHRP REPORT 350. AS PER LADOTD'S MASH IMPLEMENTATION POLICY, ITS CONTINUED USE IS ALLOWED WHILE A MASH ALTERNATIVE IS DEVELOPED OR EVALUATED.

INFORMATIONAL FOR USE

SHEET NUMBER

PARISH	CONTROL SECTION	STATE PROJECT

DESIGN	P. FOSSIER
CHECK	C. GAUDRY
DETAIL	J. DOUCET
CHECK	P. FOSSIER
REVIEW	K. BRAUNER
SERIES	1 OF 1

APPROVED BY CHIEF ENGINEER: DATE: 6/24/2026

NO.	DATE	REVISION OR CHANGE ORDER DESCRIPTION	BY

STATE OF LOUISIANA

SIDE MOUNTED BRIDGE RAIL

GRR-12

DOTD LOUISIANA DEPARTMENT OF TRANSPORTATION & DEVELOPMENT

STANDARD PLAN

12:1
6/11/2026
IP_PWP:d1274117\GRR-12.dgn

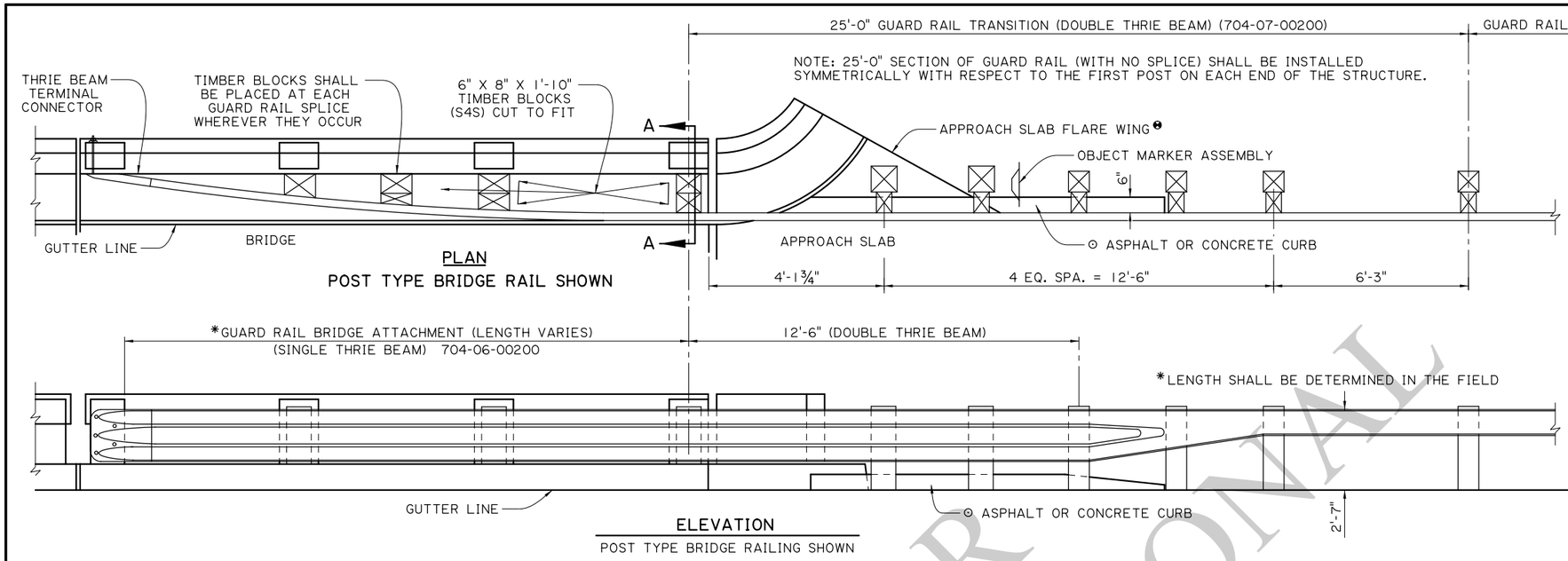

PLAN
POST TYPE BRIDGE RAIL SHOWN

ELEVATION
POST TYPE BRIDGE RAILING SHOWN

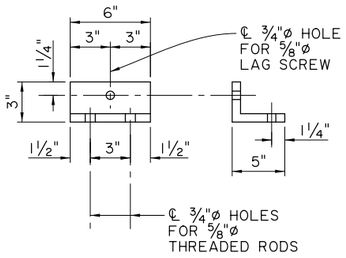

(MOUNT TO TOP OF RAIL FOR BLOCK BACKUP) THE HOLES MAY BE OFFSET TO ACHIEVE INSTALLATION BUT THE 1½" EDGE DISTANCE SHALL BE MAINTAINED.

SUPPORT ANGLE

△ ⅝"ø LAG SCREW (WITH PLATE WASHER) SHALL PENETRATE TO THE BACK OF THE REAR BLOCK (LENGTH TO BE DETERMINED IN THE FIELD)

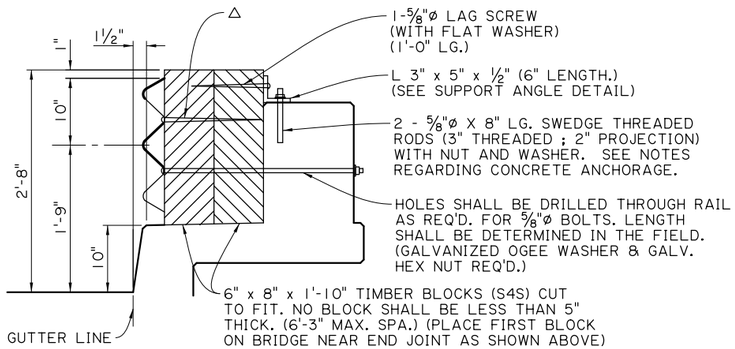

SECTION A-A
SOLID WALL RAILING

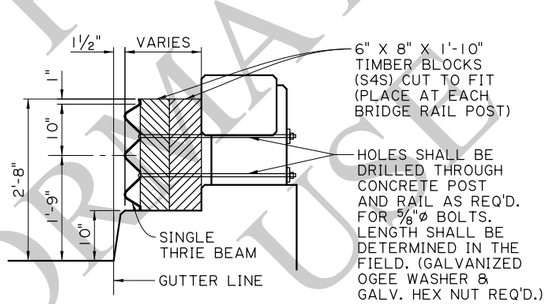

SECTION A-A
POST AND RAIL BRIDGE RAIL

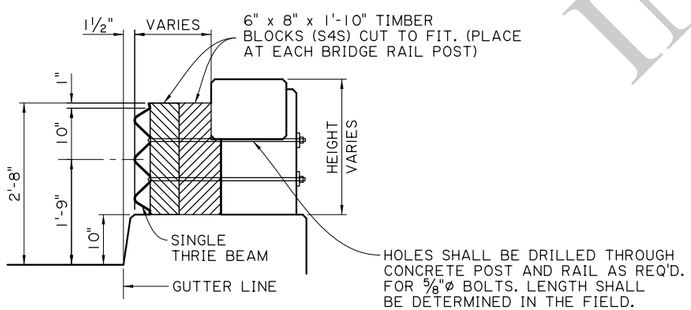

SECTION A-A
POST AND RAIL BRIDGE RAIL

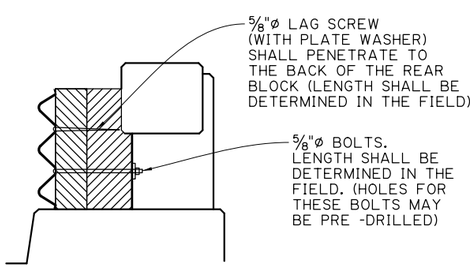

VIEW AT GUARD RAIL SPLICES

NOTES:

FOR ADDITIONAL INFORMATION ON GUARD RAIL, SEE STANDARD PLANS FOR HIGHWAY GUARD RAIL (MASH).

⊙ FOR CURB & TRANSITION INFORMATION, SEE STANDARD PLANS FOR HIGHWAY GUARD RAIL (MASH), SHEET 3 OF 11.

ALL MATERIALS AND LABOR REQ'D. TO PLACE THE GUARD RAIL ONTO THE BRIDGE SHALL BE PAID FOR UNDER ITEM 704-06-00200.

IF THE EXISTING CONCRETE IS DAMAGED DUE TO DRILLING HOLES FOR BOLTS AND RODS, THE CONTRACTOR SHALL REPAIR THE DAMAGE WITH THE APPROPRIATE MATERIALS AT HIS EXPENSE AND TO THE SATISFACTION OF THE PROJECT ENGINEER.

EXISTING HANDRAIL SHALL BE REMOVED AND DISPOSED OF BY THE CONTRACTOR AS DIRECTED BY THE PROJECT ENGINEER.

ALL HOLES (VERTICAL OR HORIZONTAL) DRILLED INTO AN EXISTING CONCRETE STRUCTURE SHALL BE ¾"ø. THEY SHALL BE CLEANED WITH COMPRESSED AIR AND MADE FREE OF ANY OIL OR RESIDUE. HOLES SHALL BE FILLED WITH AN EPOXY INJECTION SYSTEM LISTED ON THE APPROVED MATERIALS LIST, PRODUCT CATEGORY "CONCRETE ANCHOR SYSTEMS." PLACE ROD IN HOLE IMMEDIATELY AND WAIT FOR THE MANUFACTURER'S CURE TIME.

THE LOWER BOLTS IN THE GUARD RAIL AT EACH POST SHALL BE ON THE ONCOMING TRAFFIC SIDE.

IF TIMBER BLOCKS ARE LESS THAN 3" ABOVE THE CONCRETE RAIL IN THE SOLID RAIL ALTERNATE, THE METHOD SHOWN IN THE POST AND RAIL BRIDGE RAIL ALTERNATE SHALL BE UTILIZED.

THE LENGTHS OF THE LAG SCREWS SHALL BE VERIFIED BY THE PROJECT ENGINEER BEFORE INSTALLATION TO ACHIEVE THE PENETRATION CALLED FOR IN THE SOLID WALL ALTERNATE.

⓫ IF APPROACH SLAB FLARES EXIST, A 1'-0" X 1'-0" HOLE SHALL BE CUT THRU THE CONCRETE IN THE PROPER LOCATION TO INSTALL POST. AFTER POST IS IN PLACE, COMPACT SOIL AROUND POST AND REDRESS THE SLAB WITH CONCRETE TO THE FINISHED ELEVATION. (NO DIRECT PAY).

ALL STRUCTURAL STEEL SHALL BE ASTM A36 AND GALVANIZED. ALL ⅝"ø BOLTS SHALL BE ASTM A307.

THIS DETAIL WAS DEVELOPED AND APPROVED FOR USE UNDER NCHRP REPORT 350. AS PER LADOTD'S MASH IMPLEMENTATION POLICY, ITS CONTINUED USE IS ALLOWED WHILE A MASH ALTERNATIVE IS DEVELOPED OR EVALUATED.

FOR INFORMATIONAL USE

SHEET NUMBER

PARISH	CONTROL SECTION	STATE PROJECT

DESIGN	CHECK	DETAIL	CHECK	REVIEW	SERIES #
P. FOSSIER	C. GAUDRY	J. DOUCET	P. FOSSIER	K. BRAUNER	1 OF 1

APPROVED BY CHIEF ENGINEER: DATE: 6/24/2026

NO.	DATE	REVISION OR CHANGE ORDER DESCRIPTION	BY

STATE OF LOUISIANA DEPARTMENT OF TRANSPORTATION & DEVELOPMENT

GUARD RAIL TERMINATING ON BRUSH CURB BRIDGE RAIL

GRR-13

STANDARD PLAN

12:14 6/11/2026
IP_PWP:d1274117\GRR-13.dgn

12:3
6/11/2026

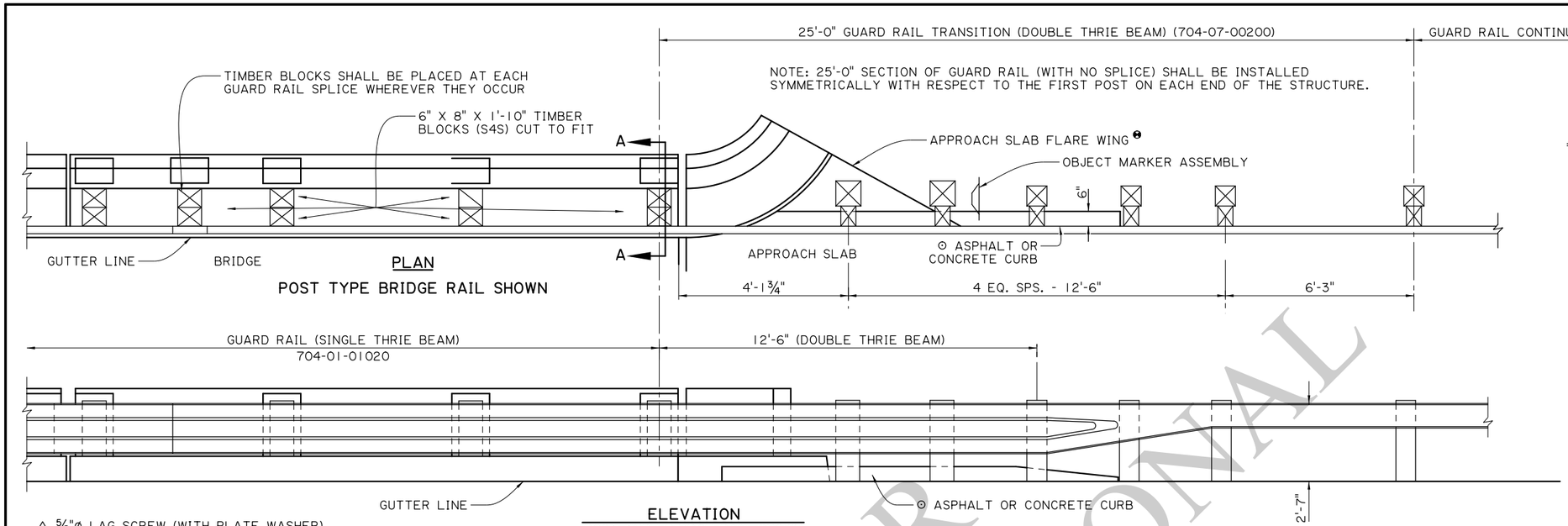

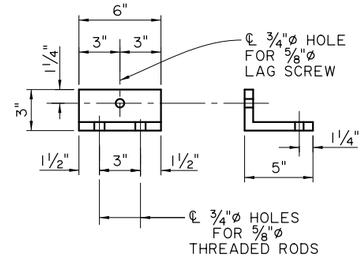

(MOUNT TO TOP OF RAIL FOR BLOCK BACKUP) THE HOLES MAY BE OFFSET TO ACHIEVE INSTALLATION BUT THE 1½" EDGE DISTANCE SHALL BE MAINTAINED.

SUPPORT ANGLE

△ ⅝"ø LAG SCREW (WITH PLATE WASHER) SHALL PENETRATE TO THE BACK OF THE REAR BLOCK (LENGTH TO BE DETERMINED IN THE FIELD)

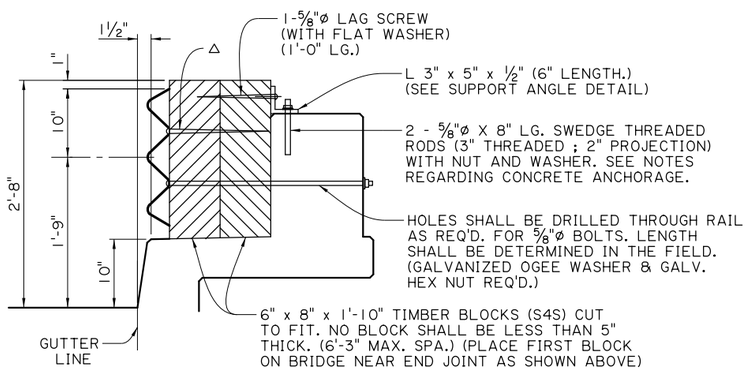

SECTION A-A
SOLID WALL RAILING

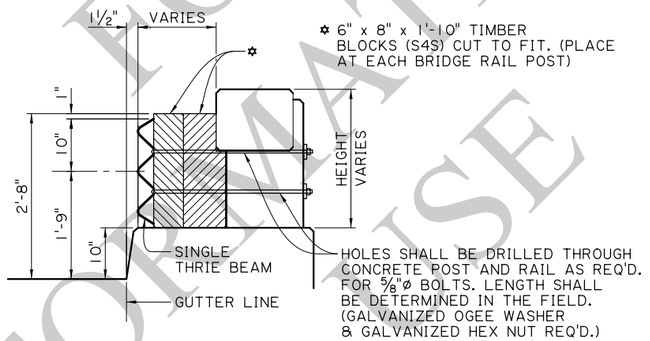

SECTION A-A
POST AND RAIL BRIDGE RAIL

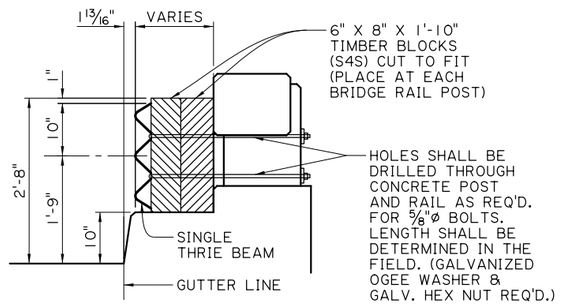

SECTION A-A
POST AND RAIL BRIDGE RAIL

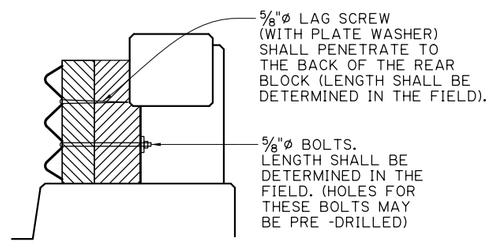

VIEW AT GUARD RAIL SPLICES

NOTES:

FOR ADDITIONAL INFORMATION ON GUARD RAIL, SEE STANDARD PLANS FOR HIGHWAY GUARD RAIL (MASH).

ALL MATERIALS AND LABOR REQ'D. TO PLACE THE GUARD RAIL ONTO THE BRIDGE SHALL BE PAID FOR UNDER ITEM 704-01-01020

⊙ FOR CURB & TRANSITION INFORMATION, SEE STANDARD PLANS FOR HIGHWAY GUARD RAIL (MASH), SHEET 3 OF 11.

EXISTING HANDRAIL SHALL BE REMOVED AND DISPOSED OF BY THE CONTRACTOR AS DIRECTED BY THE PROJECT ENGINEER.

ALL HOLES (VERTICAL OR HORIZONTAL) DRILLED INTO AN EXISTING CONCRETE STRUCTURE SHALL BE ¾"ø. THEY SHALL BE CLEANED WITH COMPRESSED AIR AND MADE FREE OF ANY OIL OR RESIDUE. HOLES SHALL BE FILLED WITH AN EPOXY INJECTION SYSTEM LISTED ON THE APPROVED MATERIALS LIST, PRODUCT CATEGORY "CONCRETE ANCHOR SYSTEMS." PLACE ROD IN HOLE IMMEDIATELY AND WAIT FOR THE MANUFACTURER'S CURE TIME.

THE LOWER BOLTS IN THE GUARD RAIL AT EACH POST SHALL BE ON THE ONCOMING TRAFFIC SIDE.

IF TIMBER BLOCKS ARE LESS THAN 3" ABOVE THE CONCRETE RAIL IN THE SOLID RAIL ALTERNATE, THE METHOD SHOWN IN THE POST AND RAIL BRIDGE RAIL ALTERNATE SHALL BE UTILIZED.

THE LENGTHS OF THE LAG SCREWS SHALL BE VERIFIED BY THE PROJECT ENGINEER BEFORE INSTALLATION TO ACHIEVE THE PENETRATION CALLED FOR IN THE SOLID WALL ALTERNATE.

❶ IF APPROACH SLAB FLARES EXIST, A 1'-0" X 1'-0" HOLE SHALL BE CUT THRU THE CONCRETE IN THE PROPER LOCATION TO INSTALL POST. AFTER POST IS IN PLACE, COMPACT SOIL AROUND POST AND REDRESS THE SLAB WITH CONCRETE TO THE FINISHED ELEVATION. (NO DIRECT PAY).

ALL STRUCTURAL STEEL SHALL BE ASTM A36 AND GALVANIZED. ALL ⅝"ø BOLTS SHALL BE ASTM A307.

THIS DETAIL WAS DEVELOPED AND APPROVED FOR USE UNDER NCHRP REPORT 350. AS PER LADOTD'S MASH IMPLEMENTATION POLICY, ITS CONTINUED USE IS ALLOWED WHILE A MASH ALTERNATIVE IS DEVELOPED OR EVALUATED.

FOR INFORMATIONAL PURPOSES ONLY

SHEET NUMBER

PARISH	CONTROL SECTION	STATE PROJECT

DESIGN	P. FOSSIER	DETAIL	J. DOUCET	REVIEW	K. BRAUNER
CHECK	C. GAUDRY	CHECK	P. FOSSIER	SERIES #	1 OF 1

APPROVED BY CHIEF ENGINEER: DATE: 6/24/2026

NO.	DATE	REVISION OR CHANGE ORDER DESCRIPTION	BY

STATE OF LOUISIANA DEPARTMENT OF TRANSPORTATION AND DEVELOPMENT

GUARD RAIL CONTINUOUS ACROSS BRUSH CURB BRIDGE RAIL

GRR-14

DOTD LOUISIANA DEPARTMENT OF TRANSPORTATION & DEVELOPMENT

STANDARD PLAN

IP_PWP:d1274117\GRR-14.dgn

6/11/2026 12:4

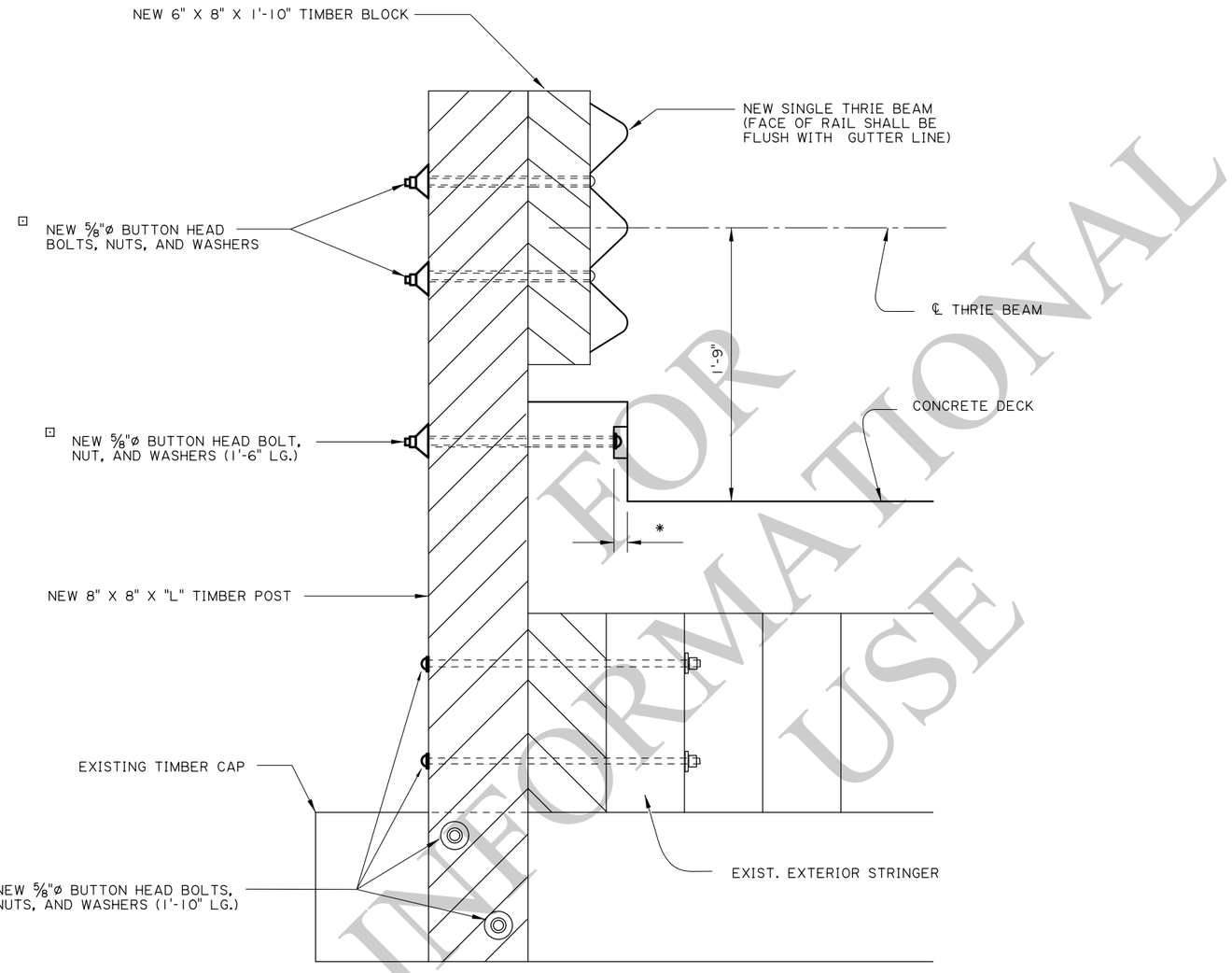

NOTES

FOR ADDITIONAL INFORMATION ON GUARD RAIL, SEE STANDARD PLANS FOR HIGHWAY GUARD RAIL (MASH).

ALL TIMBER SHALL BE TREATED SOUTHERN YELLOW PINE OR DOUGLAS FIR. (CUT TO FIT). ALL HARDWARE & NAILS INVOLVED SHALL BE REPLACED WITH NEW MATERIALS AND SHALL BE GALVANIZED.

POST SPACING VARIES FROM STRUCTURE TO STRUCTURE. ORIGINAL POST SPACING SHALL BE VERIFIED BY THE PROJECT ENGINEER AND NEW POSTS SHALL BE PLACED AT THESE LOCATIONS. ANY POST AT OTHER THAN THE ORIGINAL POST SPACING SHALL BE REMOVED.

GUARD RAIL SPLICES SHALL BE MADE AT POST LOCATIONS ONLY. LAP IN DIRECTION OF TRAFFIC.

* HOLES IN CONCRETE CURB SHALL BE COUNTER-SUNK SO THE BOLT HEAD WILL NOT PROTRUDE OUTSIDE THE FACE OF CURB. GROUT HOLES WITH APPROPRIATE MATERIAL AFTER BOLT HAS BEEN TIGHTENED.

ALL WORK AND MATERIALS REQ'D. TO COMPLETE GUARD RAIL ON BRIDGE SHALL BE PAID FOR UNDER ITEM 704-01-01020 GUARD RAIL, (SINGLE THRIE BEAM) (6'-3" POST SPA.) PER LIN. FT.

WHEN EXTERIOR STRINGER IS REQ'D. TO BE REPLACED IT SHALL BE DONE AS DIRECTED BY THE PROJECT ENGINEER AND PAID FOR UNDER FORCE ACCOUNT.

⊡ ALL 5/8"ø BOLTS SHALL BE ASTM A307.

ALL BOLT LENGTHS SHALL BE VERIFIED BY FIELD MEASUREMENTS.

THIS DETAIL WAS DEVELOPED AND APPROVED FOR USE UNDER NCHRP REPORT 350. AS PER LADOTD'S MASH IMPLEMENTATION POLICY, ITS CONTINUED USE IS ALLOWED WHILE A MASH ALTERNATIVE IS DEVELOPED OR EVALUATED.

FOR INFORMATIONAL USE

SHEET NUMBER

PARISH	CONTROL SECTION	STATE PROJECT

DESIGN	P. FOSSIER
CHECK	C. GAUDRY
DETAIL	J. DOUCET
CHECK	P. FOSSIER
REVIEW	K. BRAUNER
SERIES #	1 OF 1

APPROVED BY CHIEF ENGINEER: DATE: 6/24/2026

NO.	DATE	REVISION OR CHANGE ORDER DESCRIPTION	BY

GUARD RAIL REHABILITATION (CONCRETE DECK)

GRR-15

DOTD LOUISIANA DEPARTMENT OF TRANSPORTATION & DEVELOPMENT

STANDARD PLAN

IP_PWP:d1274117\GRR-15.dgn

6/11/2026 12:48

❷ NEW 8" WIDE X 1'-4" LONG TIMBER SHIM BLOCKS (IF REQ'D.) AT EACH 8" X 8" POST. THICKNESS TO BE DETERMINED BY THE CONTRACTOR AND VERIFIED BY THE PROJECT ENGINEER.

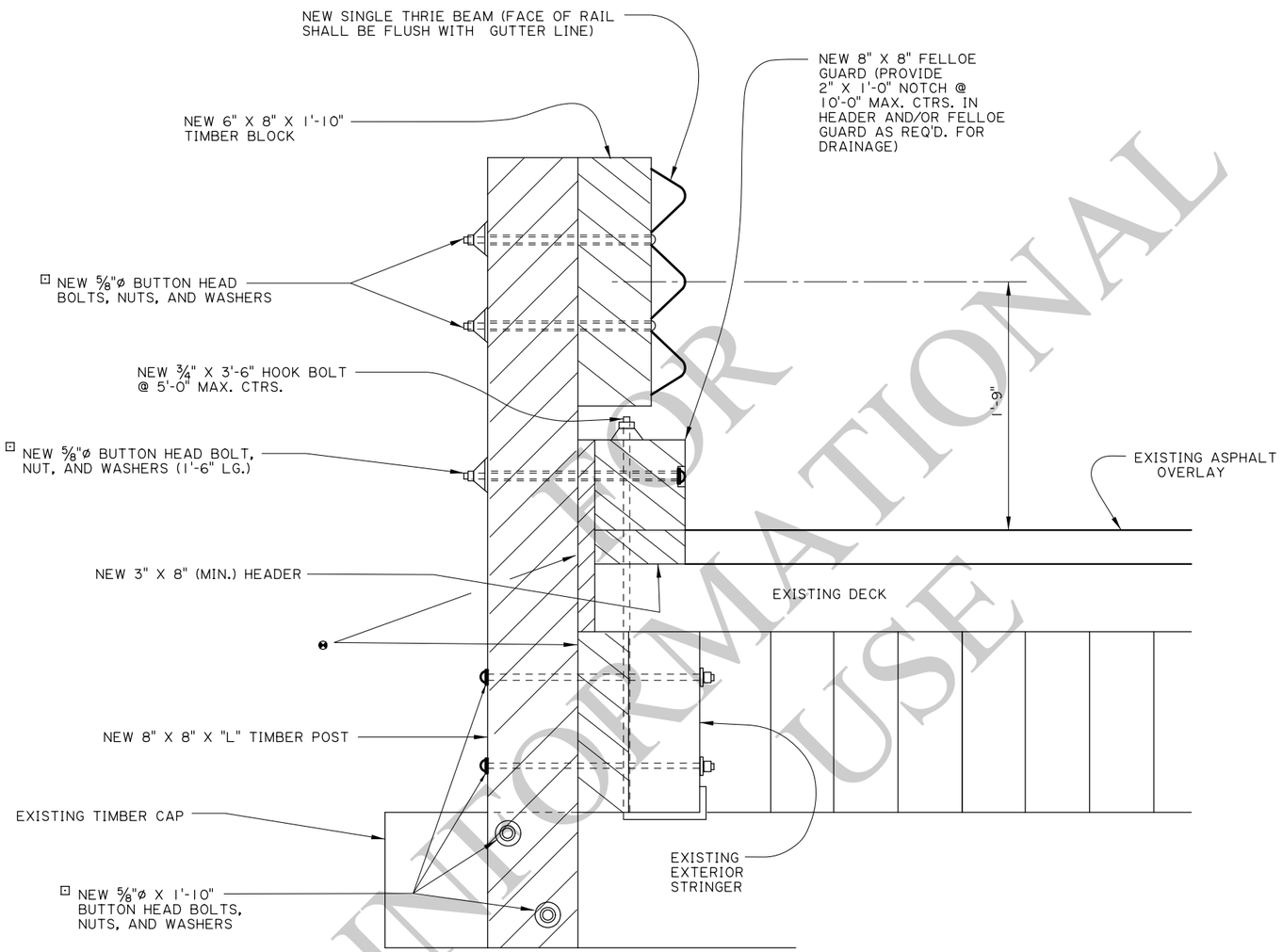

TYPICAL SECTION

(NOT TO SCALE)

NOTES

FOR ADDITIONAL INFORMATION ON GUARD RAIL, SEE STANDARD PLANS FOR HIGHWAY GUARD RAIL (MASH).

ALL TIMBER SHALL BE TREATED SOUTHERN YELLOW PINE OR DOUGLAS FIR. (CUT TO FIT) ALL HARDWARE & NAILS INVOLVED SHALL BE REPLACED WITH NEW MATERIALS AND SHALL BE GALVANIZED.

POST SPACING VARIES FROM STRUCTURE TO STRUCTURE. ORIGINAL POST SPACING SHALL BE VERIFIED BY THE PROJECT ENGINEER AND NEW POST SHALL BE PLACED AT THESE LOCATIONS. ANY POST OTHER THAN THE ORIGINAL POST SPACING SHALL BE REMOVED.

GUARD RAIL SPLICES SHALL BE MADE AT POST LOCATIONS ONLY. LAP IN DIRECTION OF TRAFFIC.

ALL WORK AND MATERIALS REQ'D. TO COMPLETE GUARD RAIL ON BRIDGE SHALL BE PAID FOR UNDER ITEM 704-01-01020 GUARD RAIL, (SINGLE THRIE BEAM) (6'-3" POST SPA.) PER LIN. FT.

WHEN EXTERIOR STRINGER IS REQ'D. TO BE REPLACED IT SHALL BE DONE AS DIRECTED BY THE PROJECT ENGINEER AND PAID FOR UNDER FORCE ACCOUNT.

⊡ ALL 5/8"ø BOLTS SHALL BE ASTM A307.

ALL BOLT LENGTHS SHALL BE VERIFIED BY FIELD MEASUREMENTS.

THIS DETAIL WAS DEVELOPED AND APPROVED FOR USE UNDER NCHRP REPORT 350. AS PER LADOTD'S MASH IMPLEMENTATION POLICY, ITS CONTINUED USE IS ALLOWED WHILE A MASH ALTERNATIVE IS DEVELOPED OR EVALUATED.

INFORMATIONAL PURPOSES ONLY NOT FOR CONSTRUCTION

SHEET NUMBER

PARISH	CONTROL SECTION	STATE PROJECT

DESIGN	P. FOSSIER	DETAIL	J. DOUCET	REVIEW	K. BRAUNER
CHECK	C. GAUDRY	CHECK	P. FOSSIER	SERIES	1 OF 1

APPROVED BY CHIEF ENGINEER: DATE: 6/24/2024

NO.	DATE	REVISION OR CHANGE ORDER DESCRIPTION	BY

GUARD RAIL REHABILITATION (TIMBER DECK)

GRR-16

DOTD LOUISIANA DEPARTMENT OF TRANSPORTATION & DEVELOPMENT

STANDARD PLAN

IP_PWP:d1274117\GRR-16.dgn

12:5
6/11/2026

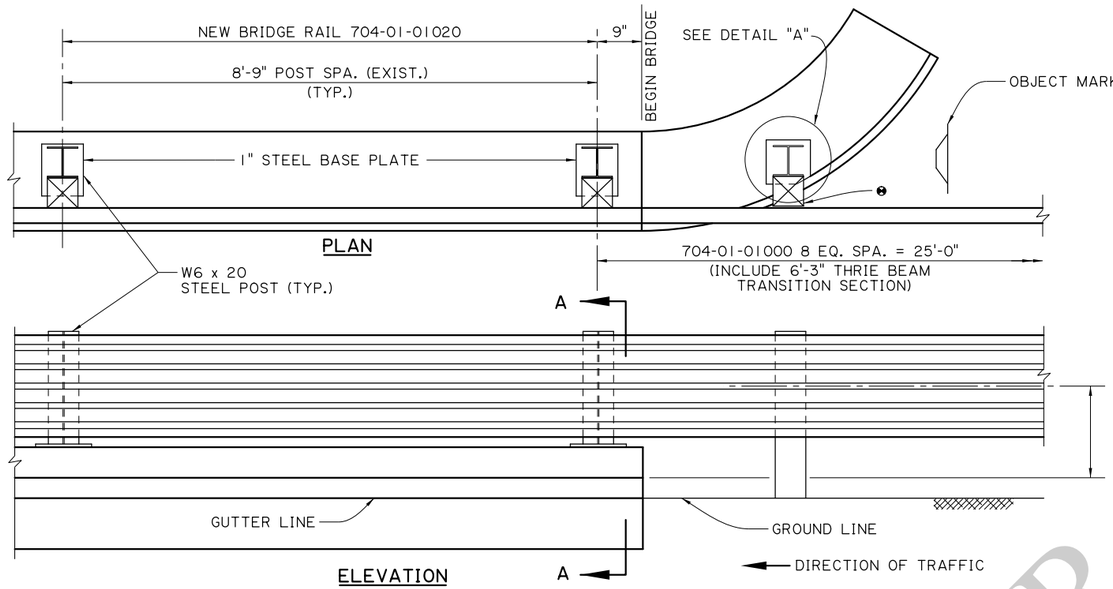

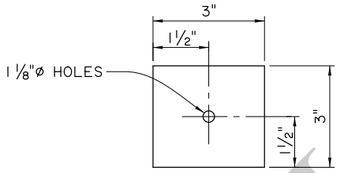

⅝" GALVANIZED STEEL PLATE

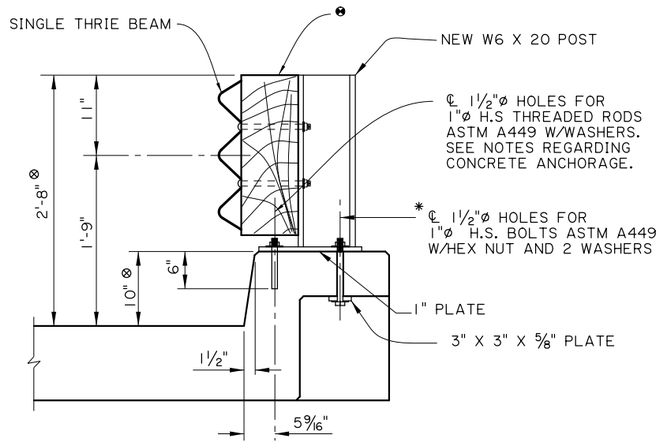

SECTION A-A

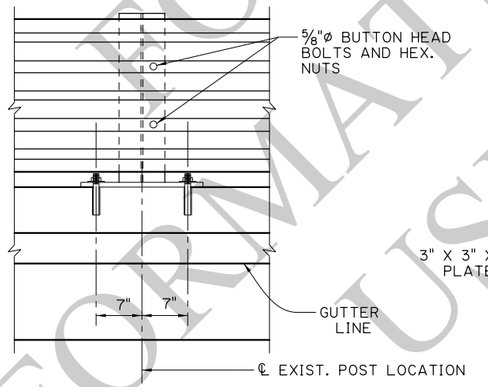

FRONT VIEW

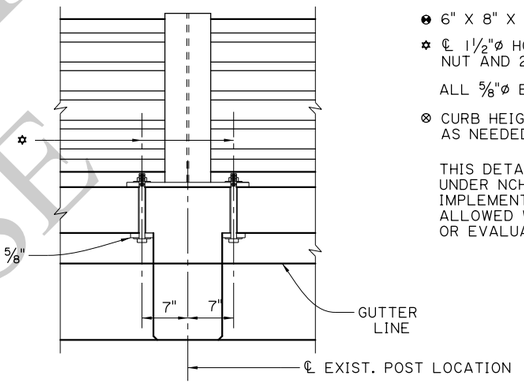

REAR VIEW

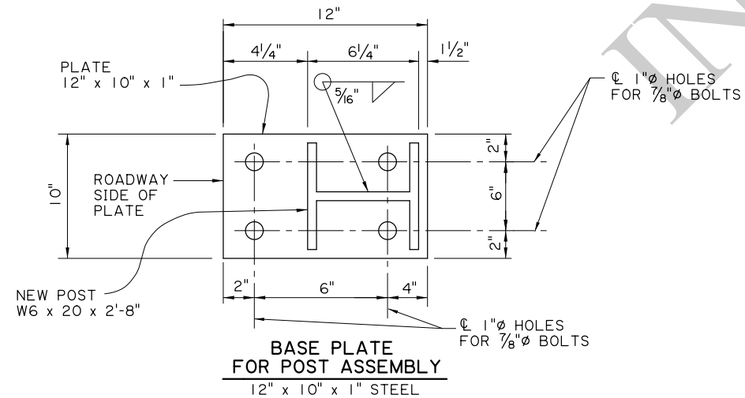

BASE PLATE
FOR POST ASSEMBLY
12" x 10" x 1" STEEL

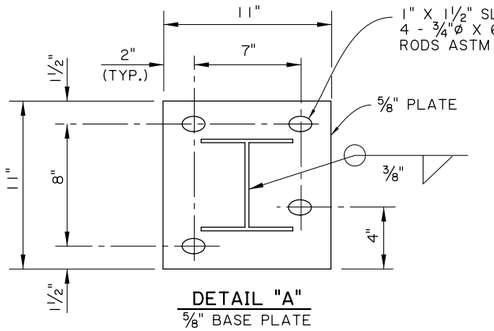

DETAIL "A"
⅝" BASE PLATE

NOTES:

FOR ADDITIONAL INFORMATION ON GUARD RAIL, SEE STANDARD PLANS FOR HIGHWAY GUARD RAIL (MASH).

ALL WORK AND MATERIALS REQ'D. TO INSTALL GUARD RAIL ON THE STRUCTURE SHALL BE PAID FOR UNDER ITEM 704-01-01020

ANY DAMAGE DONE TO THE STRUCTURE DURING CONSTRUCTION NOT RELATED TO THE WORK REQUIRED SHALL BE REPAIRED AT THE CONTRACTORS EXPENSE AND TO THE SATISFACTION OF THE PROJECT ENGINEER.

ALL HOLES (VERTICAL OR HORIZONTAL) DRILLED INTO AN EXISTING CONCRETE STRUCTURE SHALL BE CLEANED WITH COMPRESSED AIR AND MADE FREE OF ANY OIL OR RESIDUE. HOLES SHALL BE FILLED WITH AN INJECTION SYSTEM LISTED ON THE APPROVED MATERIALS LIST, PRODUCT CATEGORY "CONCRETE ANCHOR SYSTEMS." PLACE ROD IN HOLE IMMEDIATELY AND WAIT FOR THE MANUFACTURER'S CURE TIME.

NOMINAL POST SPACING ON THIS SPAN IS 8'-9" (ORIGINAL DESIGN). NEW POST ARE REQUIRED AND SHALL BE INSTALLED AS SHOWN. GUARD RAIL SPLICES SHALL BE MADE AT POST LOCATIONS ONLY. THE POST LOCATED ON THE FLARED BRIDGE END SHALL BE INSTALLED AS SHOWN. IF A FLARED END DOES NOT EXIST A NORMAL 6" X 8" TIMBER POST OR A APPROVED ALTERNATE SHALL BE USED.

✳ NOTE: (AT END SPAN POST LOCATION ONLY) THE INTERIOR BOLT SHALL BE AS SHOWN. THE OUTER BOLT NEARER TO END JOINT) SHALL BE DRILLED IN THE SAME MANNER AS THE FRONT ANCHOR BOLTS.

ALL STRUCTURAL STEEL SHALL BE ASTM A36 AND GALVANIZED.

☒ THE EXISTING POST SHALL BE REMOVED AND NEW POST BE MOUNTED ON THE TOP OF THE STRUCTURE AS SHOWN AND AT THE SAME SPACING.

❶ 6" X 8" X 1'-10" TIMBER BLOCK

✡ ℄ 1½"ø HOLES FOR 1"ø H.S. BOLTS. ASTM A449 W/HEX NUT AND 2 WASHERS

ALL ⅝"ø BOLTS SHALL BE ASTM A307.

⊗ CURB HEIGHT MAY VARY, ADJUST W6 x 20 POST LENGTH AS NEEDED TO MEET 2'-8" DIMENSION.

THIS DETAIL WAS DEVELOPED AND APPROVED FOR USE UNDER NCHRP REPORT 350. AS PER LADOTD'S MASH IMPLEMENTATION POLICY, ITS CONTINUED USE IS ALLOWED WHILE A MASH ALTERNATIVE IS DEVELOPED OR EVALUATED.

FOR INFORMATIONAL USE

SHEET NUMBER

PARISH	CONTROL SECTION	STATE PROJECT

DESIGN	CHECK	DETAIL	CHECK	REVIEW	SERIES
P. FOSSIER	C. GAUDRY	J. DOUCET	P. FOSSIER	K. BRAUNER	1 OF 1

APPROVED BY CHIEF ENGINEER: DATE: 6/24/2026

NO.	DATE	REVISION OR CHANGE ORDER DESCRIPTION	BY

STATE OF LOUISIANA
DEPARTMENT OF TRANSPORTATION AND DEVELOPMENT

BRIDGE RAIL REHABILITATION
WASKEY BRIDGES

GRR-17

DOTD
LOUISIANA DEPARTMENT OF TRANSPORTATION & DEVELOPMENT

STANDARD PLAN

IP_PWP:d1274117\GRR-17.dgn

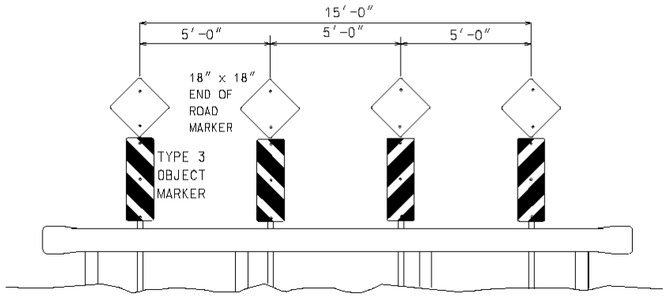

END-OF-ROADWAY INSTALLATION

DEAD END ROAD INSTALLATION

(TYPE A - WITH GUARD RAIL, TYPE D - WITHOUT GUARDRAIL)

For End of Road installation Object Marker stripes shall slope downward toward the center.

Guardrail to be installed in accordance with guardrail Standard Plans.

Typical installation requires 25 ft. of rail with flared end sections.

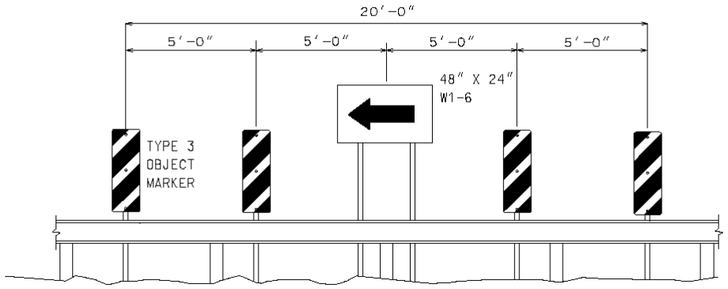

TURN INSTALLATION

DEAD END ROAD INSTALLATION

(TYPE B - WITH GUARD RAIL, TYPE C - WITHOUT GUARDRAIL)

For Turn installations Object Marker stripes shall slope downward toward the direction of travel.

Guard rail to be installed in accordance with guardrail Standard Plans.

Typical installation requires 25 ft. of rail with flared end sections.

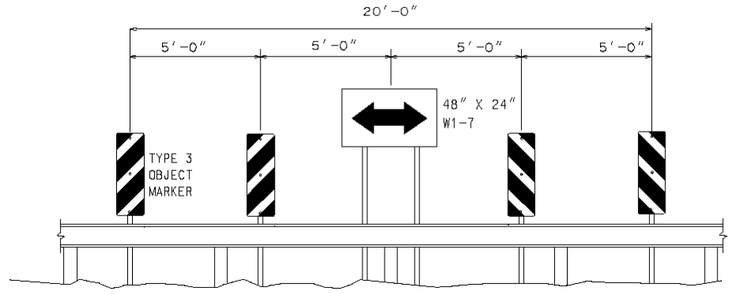

T-INTERSECTION INSTALLATION

DEAD END ROAD INSTALLATION

(TYPE B - WITH GUARD RAIL, TYPE C - WITHOUT GUARDRAIL)

For T-intersection installations Object Marker stripes shall slope away from center.

Guardrail to be installed in accordance with guardrail Standard Plans.

Typical installation requires 25 ft. of rail with flared end sections.

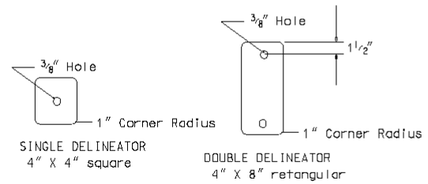

DETAIL OF DELINEATORS

Colors shall be red, white, or yellow.
The sheeting shall be in accordance with DOTD Standard Specification

For alternate Delineator/Flexible Post systems see the DOTD Approved Materials List. Alternates shall have an equivalent area of sheeting and shall not be less than 3 in. wide.

The mounting height shall be the same as for Milepost Markers.

Post penetration in ground shall be a minimum of 2 ft.

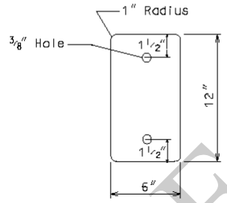

DETAIL OF TYPE 2 OBJECT MARKER

The face shall be yellow. The sheeting shall be in accordance with DOTD Standard Specification. The typical mounting height from the ground line to the bottom of the object marker shall be 36 in.

Post penetration in ground shall be a minimum of 2 ft.

Type 2 Object Markers are typically used in the right-of-way to mark objects for mowing operations.

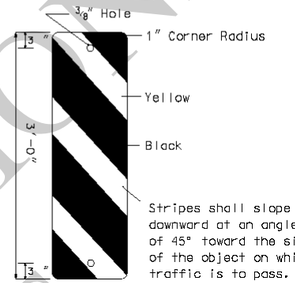

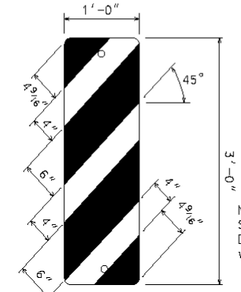

DETAIL OF TYPE 3 OBJECT MARKER

The markings on the Object Markers shall be diagonal, black and yellow stripes. The sheeting shall be in accordance with DOTD Standard Specifications.

Post penetration in ground shall be a minimum of 3 ft.

Type 3 Object Markers are typically used to mark objects in the roadway (travel lanes and shoulder) and to mark guard rail installation (see guard rail Standard Plans) .

When used for marking objects in the roadway or objects that are 8 ft. or less from the shoulder or curb, the mounting height to the bottom of the object marker should be at least 4 ft. above the surface of the nearest traffic lane.

When used to mark objects more than 8 ft. from the shoulder or curb, the mounting height to the bottom of the object marker should be at least 4 ft. above the ground.

Note: For mile markers on conventional roads. See the details shown on the Special Signing Details sheets-B. This is in accordance with MUTCD signs D10-4 & D10-5 in Figure 2H-4.

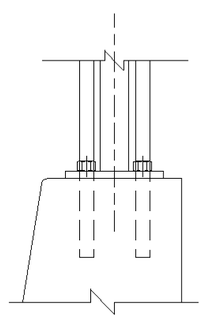

SECTION

Anchor Bolts
1/4 in. plate - 5/16 in. x 4 in. bolt
9/16 in. plate - 1/2 in. x 5 in. bolt

For bolt anchors see DOTD Approved Materials List.

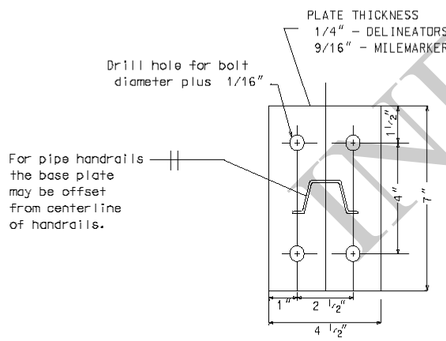

PLAN

Steel base plate and channel posts shall be galvanized after fabrication.

DETAIL FOR MOUNTING SIGN POST TO CONCRETE BARRIER RAIL

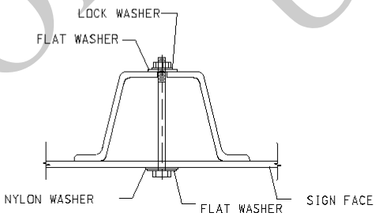

Steel U-channel sign post shall have 3/8 in. dia. holes drilled in channel on 1 in. centers from top of post. Steel tube post (Min. 2.23 lb/ft) may be used in lieu of U-channel posts.

Post Weight: 2.0 lbs/ft - DELINEATORS and TYPE 2 OBJECT MARKERS
2.5 lbs/ft - MILEMARKERS and TYPE 3 OBJECT MARKERS
3.0 lbs/ft - WARNING SIGNS, W1-6, W1-7

Fasteners shall be either bolts or rivets.

Bolts shall be 5/16 in. diameter electroplated steel hex head bolts with one nylon washer, two flat washers, one lock washer, and one vandal resistant hex nut.

Rivets shall be vandal resistant 1/4 in. diameter aluminum blind rivets with smooth, low profile heads on each end.

DETAIL FOR MOUNTING SIGN TO U-CHANNEL POST

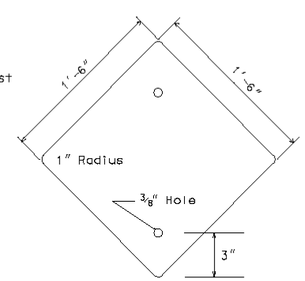

DETAIL OF END OF ROAD MARKER

Colors shall be red.

The sheeting shall be in accordance with DOTD Standard Specification.

The minimum mounting height from the ground line to the bottom of the marker shall be 5 ft.

Post penetration in ground shall be a minimum of 3 ft.

MOUNTING DETAILS

INFORMATIONAL USE

SHEET NUMBER

PARISH | CONTROL SECTION | STATE PROJECT

DESIGN CHECK | DETAIL CHECK | REVIEW | SERIES # 1 OF 1

APPROVED BY CHIEF ENGINEER:

DATE: 6/1/2026

REVISION OR CHANGE ORDER DESCRIPTION | BY | NO. | DATE

OBJECT MARKERS AND DEAD END ROAD INSTALLATION

HS-03

DOTD LOUISIANA DEPARTMENT OF TRANSPORTATION & DEVELOPMENT

STANDARD PLAN

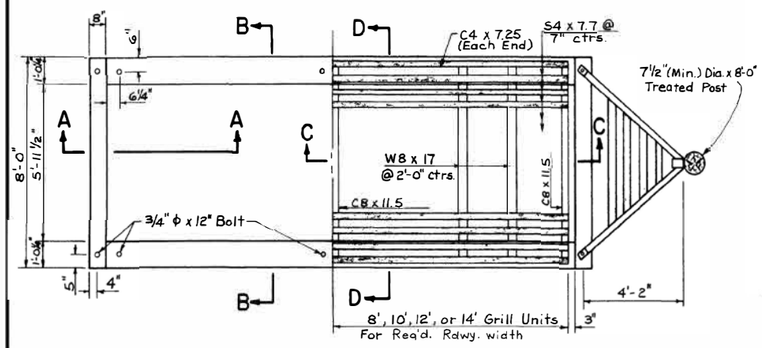

PLAN

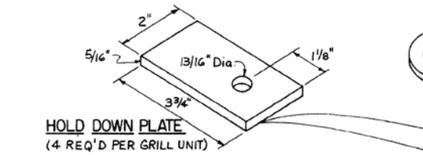

DRILLING LAYOUT

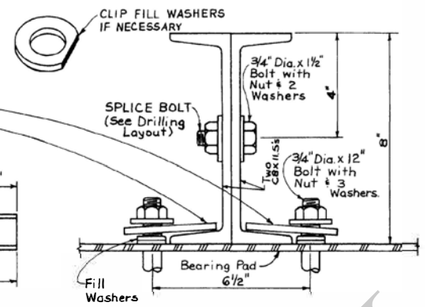

MULTIPLE GRILL UNIT CONNECTION

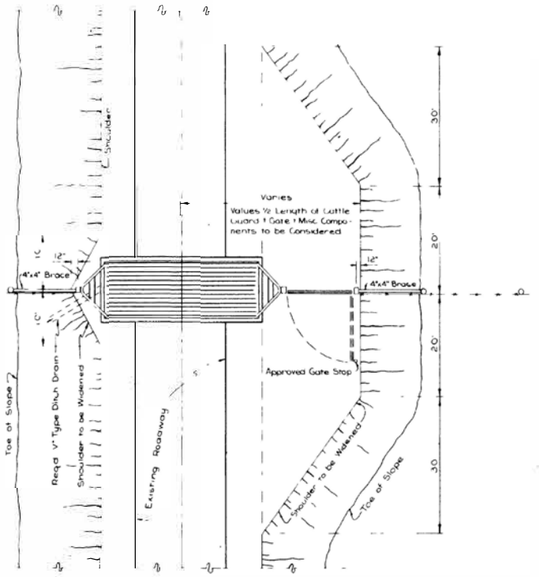

PLAN OF CATTLE GUARD
ON STATE SECONDARY OR PARISH ROADS

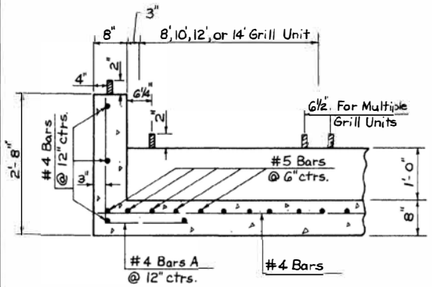

SECTION A-A

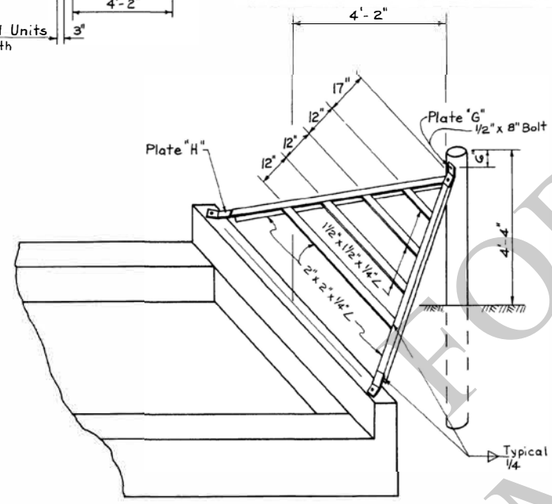

STEEL WING DETAIL

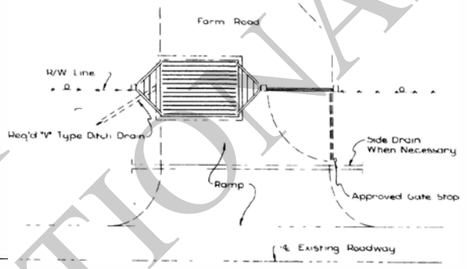

PLAN OF CATTLE GUARD ON R/W LINE

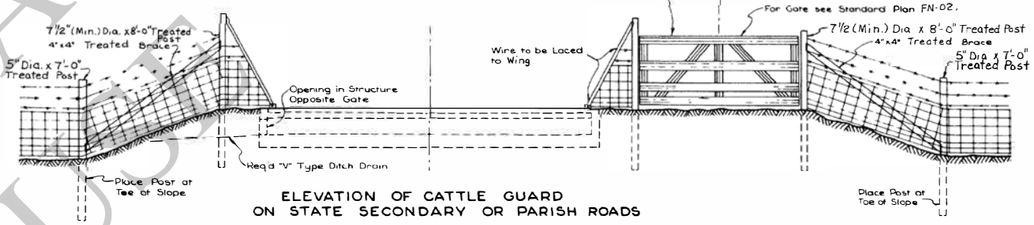

ELEVATION OF CATTLE GUARD
ON STATE SECONDARY OR PARISH ROADS

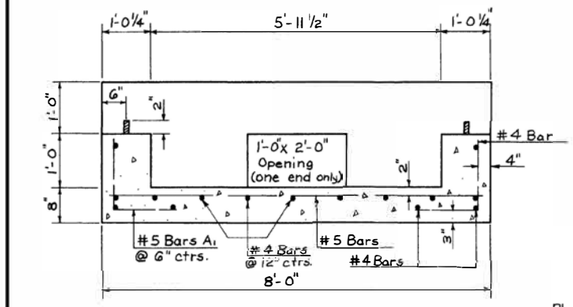

SECTION B-B

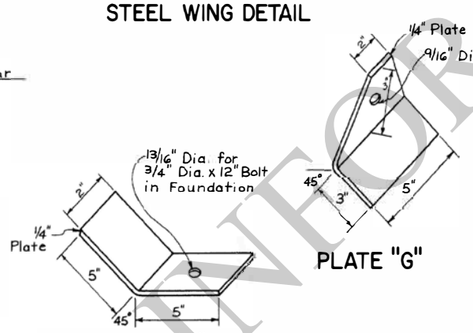

PLATE "G"

PLATE "H"

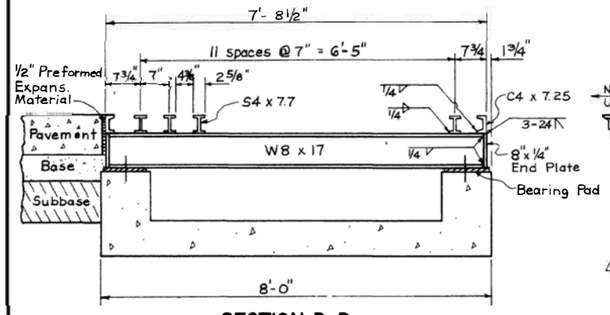

SECTION D-D

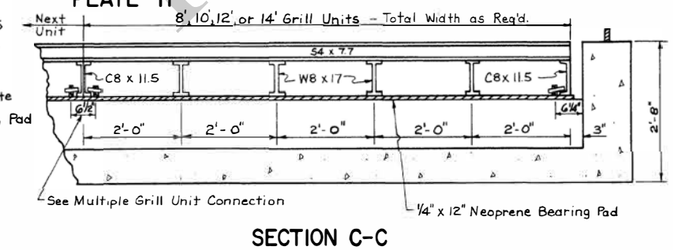

SECTION C-C

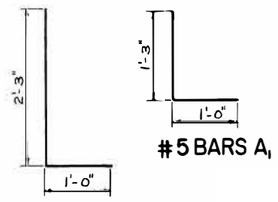

#4 BARS A

#5 BARS A1

GENERAL NOTES:

Concrete shall be Class "AI".

All structural steel shall conform to ASTM A-36.

Painting of Grill Units and Wings shall be an Organic Zinc Primer and Topcoat Systems according to Std. Spec. Section 811 and related Supplemental Specifications.

Welding shall conform to the D.O.T.D. Std. Specifications and the D.O.T.D. Welding Procedures Manual.

INFORMATIONAL USE

SHEET NUMBER

PARISH | CONTROL SECTION | STATE PROJECT

DESIGN CDJ | CHECK JCM | DETAIL JCM | CHECK CDJ | REVIEW | SERIES # 1 OF 1

APPROVED BY CHIEF ENGINEER: DATE: 6/1/2026

REVISION OR CHANGE ORDER DESCRIPTION | BY | DATE | NO.

STATE OF LOUISIANA DEPARTMENT OF TRANSPORTATION AND DEVELOPMENT

CATTLE GUARD
(STRUCTURAL STEEL)

KG-01

DOTD
LOUISIANA DEPARTMENT OF TRANSPORTATION & DEVELOPMENT

STANDARD PLAN

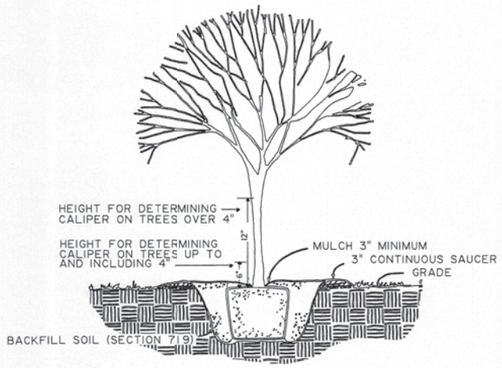

INDIVIDUAL TREE PLANTING DETAIL 1 LD-1
NTS

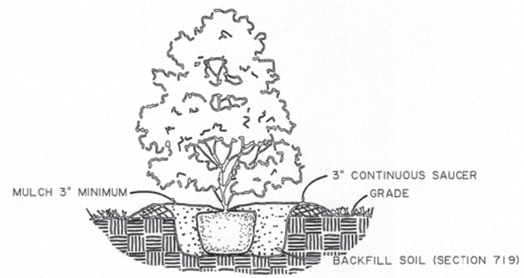

INDIVIDUAL SHRUB PLANTING DETAIL 2 LD-1
NTS

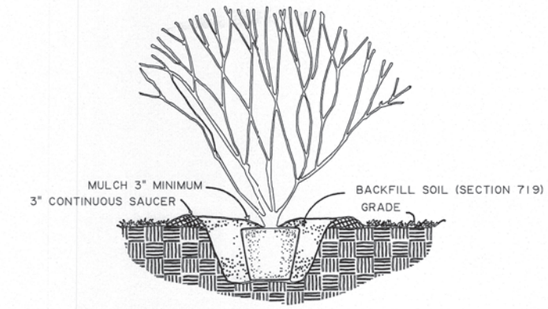

(Multi-trunk) TREE PLANTING DETAIL 3 LD-1
NTS

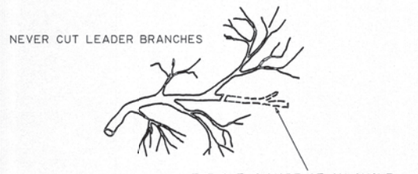

NOTES:

1. WHEN PLANTING INDIVIDUAL TREES OUTSIDE OF AREAS MAINTAINED AS PREPARED BEDS, THE MATERIALS USED IN THE INSTALLATION ARE INCLUDED IN THE COST OF EACH TREE AS DESCRIBED IN SECTION 719 OF THE "STANDARD SPECIFICATIONS FOR ROADS AND BRIDGES", UNDER "SETTING INDIVIDUAL PLANTS NOT IN BEDS".

2. ROWS OR GROUPS OF TREES IN CLOSE PROXIMITY AND PLANTED OUTSIDE OF AREAS MAINTAINED AS PREPARED BEDS, MAY HAVE A COMMON MULCHED AREA ENCOMPASSING THEM IN ORDER TO SIMPLIFY MOWING AROUND THEM. THE METHOD OF PREPARING THE MULCHED AREA IS DESCRIBED IN SECTION 719 OF THE "STANDARD SPECIFICATIONS FOR ROADS AND BRIDGES", UNDER "SETTING INDIVIDUAL PLANTS (BED PREPARATION MULCH BEDS)".

3. PROPOSED VEGETATION OVER 30 INCHES IN HEIGHT AT MATURITY SHALL NOT BE LOCATED WITHIN THE SIGHT TRIANGLE (CRITICAL ZONE), AS DESCRIBED IN "FIGURE 1 CRITICAL SIGHT DISTANCE FOR TRAFFIC ENTERING THE HIGHWAY" WHICH MAY BE FOUND IN THE LOUISIANA ADMINISTRATIVE CODE TITLE 70-TRANSPORTATION AND DEVELOPMENT.

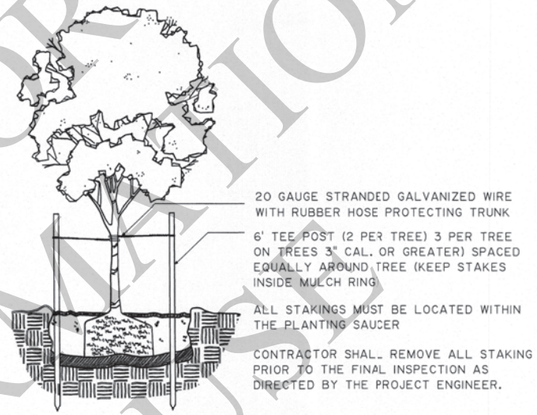

TREE STAKING DETAIL 4 LD-1
NTS

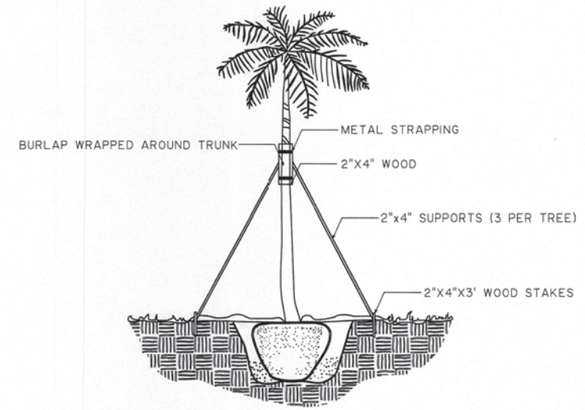

PALM STAKING DETAIL 5 LD-1
NTS

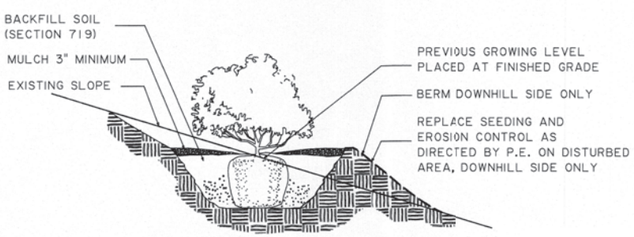

SLOPE PLANTING DETAIL 6 LD-1
NTS

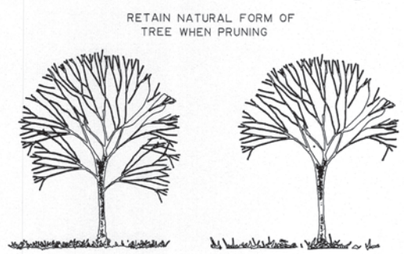

TREE PRUNING DETAIL 7 LD-1
NTS

FOR INFORMATIONAL USE ONLY

SHEET NUMBER xxx
PARISH | CONTROL SECTION | STATE PROJECT
DESIGN | CHECK | DETAIL HJP | CHECK RJD | REVIEW | SERIES * 1 OF 1
APPROVED BY CHIEF ENGINEER:
DATE: 12/10/2025
REVISION OR CHANGE ORDER DESCRIPTION | BY | DATE | NO.

STATE OF LOUISIANA

TREE AND SHRUB PLANTING DETAILS
LD-01

DOTD
LOUISIANA DEPARTMENT OF TRANSPORTATION & DEVELOPMENT

STANDARD PLAN

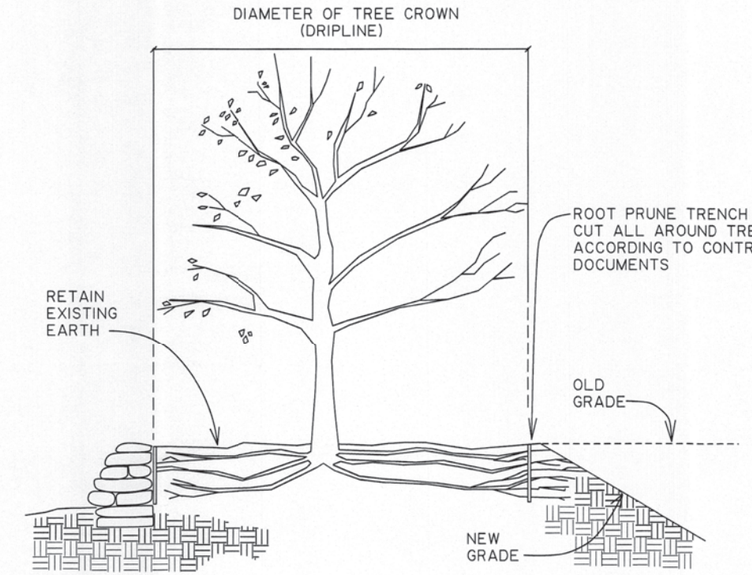

CUTTING GRADE AROUND EXISTING TREE

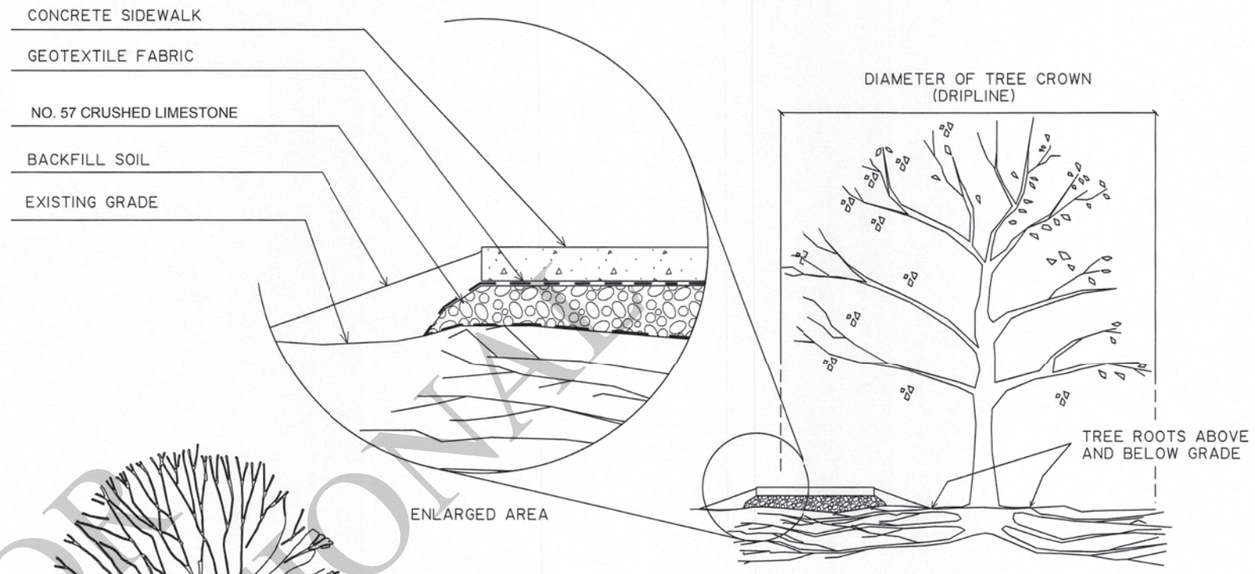

SIDEWALK WITHIN CRITICAL PROTECTION ZONE

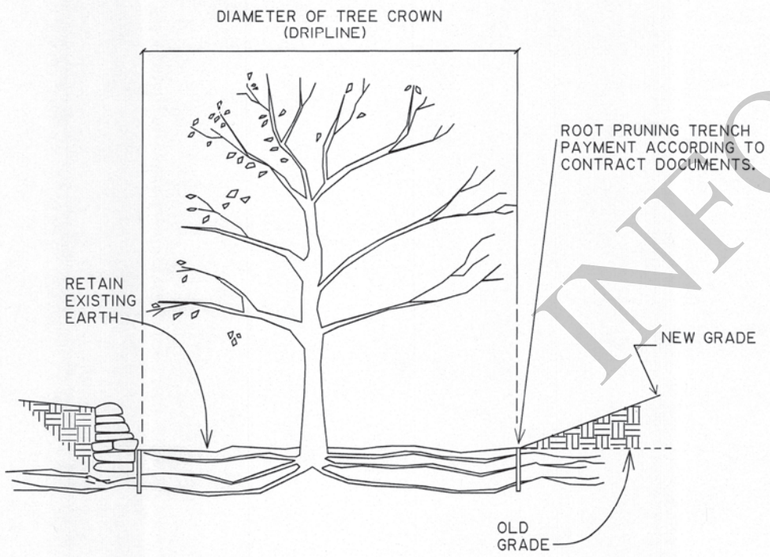

FILLING GRADE AROUND EXISTING TREE

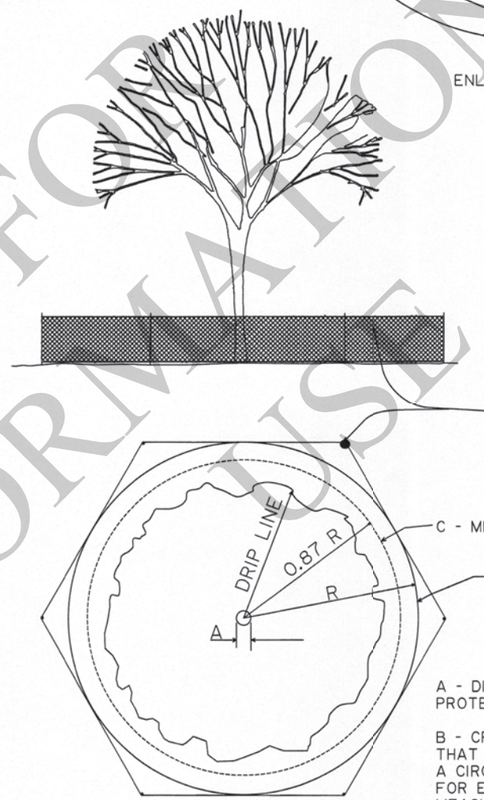

A - DIAMETER IN INCHES 4'-6" ABOVE GRADE OF PROTECTED TREE

B - CRITICAL PROTECTION ZONE (CPZ) THAT AREA SURROUNDING A TREE WITHIN A CIRCLE INSCRIBED BY A RADIUS OF ONE FOOT FOR EACH INCH OF THE TREE'S DIAMETER MEASURED AT 4'-6" ABOVE GRADE

C - MIN. 75% OF B AREA

CONSTRUCTION FENCING
FOR TREE PROTECTION

NOTE:

GREAT CARE MUST BE TAKEN NOT TO COMPACT, CUT, OR FILL THE EARTH WITHIN THE CROWN AREA OF EXISTING TREES. MOST TREE ROOTS ARE LOCATED IN THE TOP 6 TO 18 INCHES OF THE SOIL AND OFTEN SPREAD FARTHER THAN THE DRIP LINE OF THE TREE. COMPACTION CAN CAUSE SEVERE ROOT DAMAGE AND REDUCE THE MOVEMENT OF WATER AND AIR THROUGH THE SOIL. TO AVOID COMPACTING THE EARTH, DO NOT OPERATE EQUIPMENT OR STORE MATERIALS WITHIN THE DIAMETER OF THE TREE CROWN (DRIPLINE).

TREE PROTECTION DETAILS FOR CONSTRUCTION AROUND EXISTING TREES

FOR INFORMATIONAL USE

SHEET NUMBER: XXX

PARISH | CONTROL SECTION | STATE PROJECT

DESIGN | DETAIL: HJP | REVIEW | SERIES: 1 OF 1
CHECK | CHECK: RJD

APPROVED BY CHIEF ENGINEER:
DATE: 12/09/2025

NO.	DATE	REVISION OR CHANGE ORDER DESCRIPTION	BY

STATE OF LOUISIANA

TREE PROTECTION DETAILS
FOR CONSTRUCTION AROUND
EXISTING TREES
LD-02

DOTD
LOUISIANA DEPARTMENT OF TRANSPORTATION & DEVELOPMENT

STANDARD
PLAN

PLANTING LIST

ITEM NO.	PAY ITEM BOTANICAL NAME	PAY ITEM COMMON NAME	PAY UNIT	QUANTITY	HEIGHT	CALIPER	SPREAD	DESCRIPTION

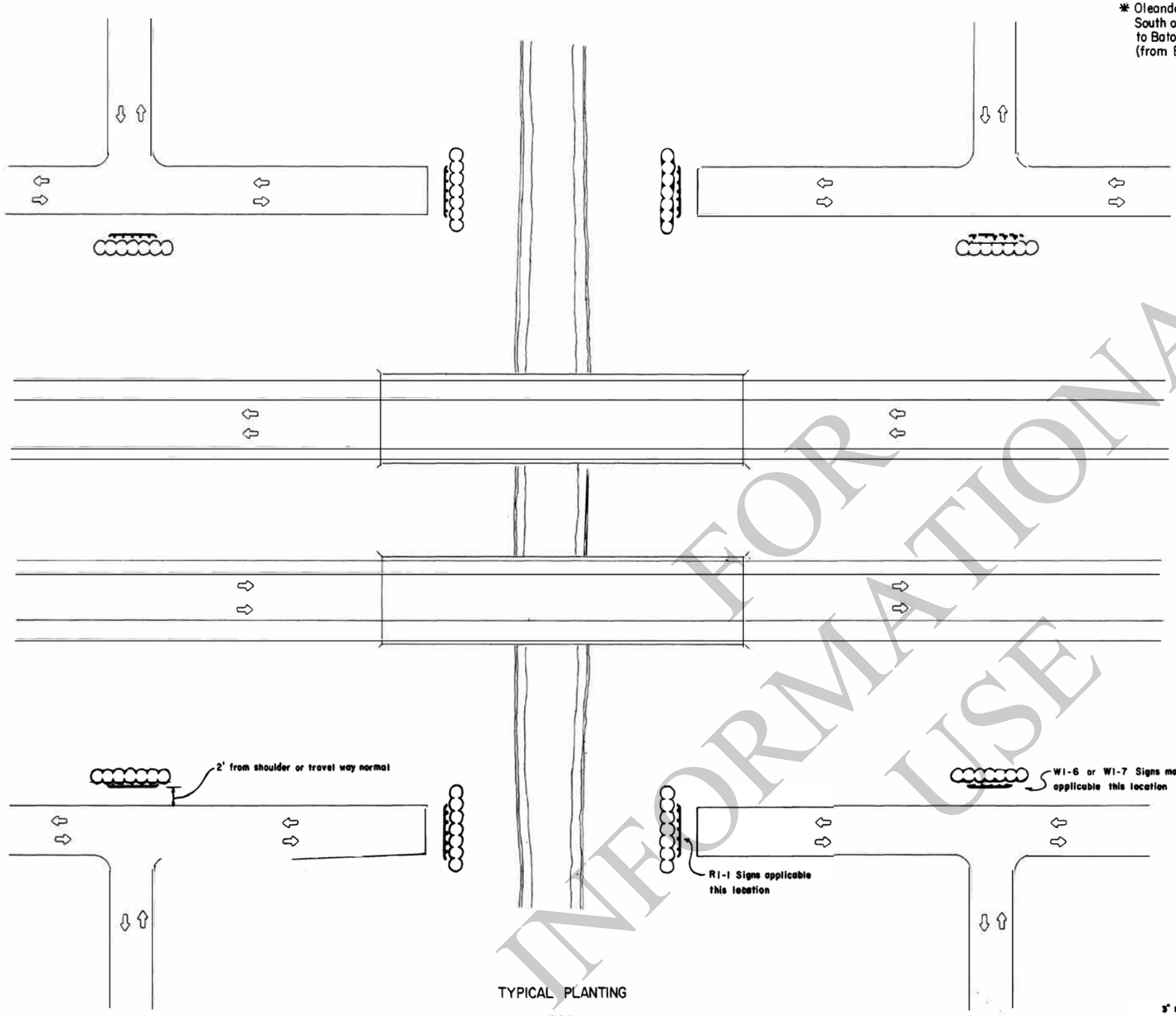

TYPICAL PLANTING
FOR
DEAD END ROAD INSTALLATION

* Oleander will be limited to areas South of I-10 (from Texas State Line to Baton Rouge) and South of I-12 (from Baton Rouge to Slidell).

PLANT MATERIAL

Botanical Name	Common Name & Spacing	Size
Cortaderia argentea	- Pampas grass (4' o.c.)	3'-4'
Jasminum primulinum	- Primrose jasmine (4' o.c.)	24"-30"
Ligustrum japonica	- Wax leaf ligustrum (4' o.c.)	24"-30"
Viburnum odoratissimum	- Sweet viburnum (4' o.c.)	24"-30"
*Nerium oleander	- Oleander (4' o.c.)	3'-4'
Feijoa sellowiana	- Pineapple guava (4' o.c.)	24"-30"
Pyracantha spp.	- Firethorn (4' o.c.)	3'-4'

GENERAL NOTE :

1. All shrubbery to be planted a minimum of 6' from barrier. Barrier location should normally be 2' behind shoulder or travel way as directed by the Engineer.
2. Typical Shrubbing locations shown are intended to serve as a guide only. Shrubbery required shall be indicated on the plans or summary sheet or at locations directed by the Engineer. Payment shall be designated by the appropriate landscape pay item.
3. See Project Specifications for planting and acceptance requirements.

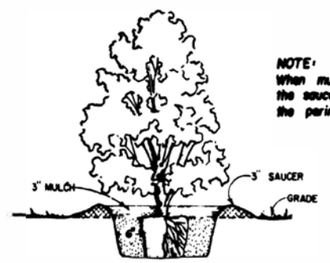

NOTE:
When mulching rows or groups of shrubs, the saucer will run continuously along the perimeter of the planting.

SHRUB PLANTING DETAIL

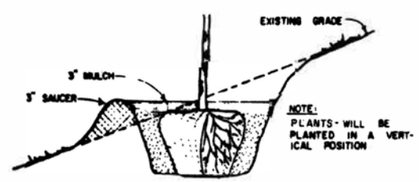

PLANTING ON SLOPES

FOR INFORMATIONAL USE

SHEET NUMBER

PARISH | CONTROL SECTION | STATE PROJECT

DESIGN CHECK | DETAIL CHECK: LH SB | REVIEW | SERIES # 1 OF 1

APPROVED BY CHIEF ENGINEER:

DATE: 6/1/2026

NO. | DATE | REVISION OR CHANGE ORDER DESCRIPTION | BY

STATE OF LOUISIANA — DEPARTMENT OF TRANSPORTATION AND DEVELOPMENT

TYPICAL LANDSCAPING LAYOUT FOR USE WITH DEAD END ROAD INSTALLATIONS

LS-01

DOTD
LOUISIANA DEPARTMENT OF TRANSPORTATION & DEVELOPMENT

STANDARD PLAN

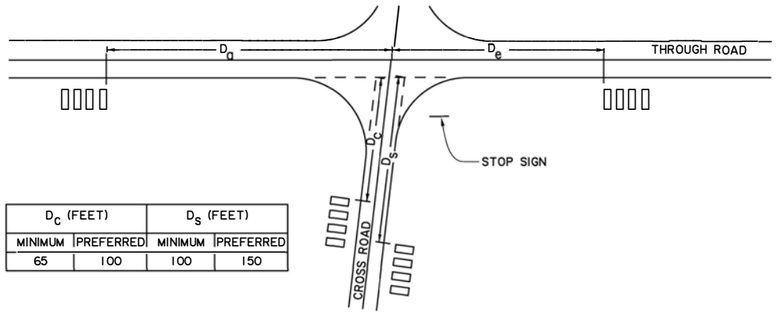

D_c (FEET)		D_s (FEET)	
MINIMUM	PREFERRED	MINIMUM	PREFERRED
65	100	100	150

THROUGH ROAD SPEED (M.P.H.)	D_a (FEET)		D_e (FEET)		
	$n\ V_c\ V_m \leq 4000$	$n\ V_c V_m > 4000$	$\frac{V_c}{1.5n-.5} \leq 50$	$50 < \frac{V_c}{1.5n-.5} \leq 400$	$\frac{V_c}{1.5n-.5} > 400$
35	65	200	65	100	100
≥ 55	65	295	150	150	200

V_c = AVERAGE DAILY TRAFFIC ON CROSS ROAD (VEHICLES PER DAY)

V_m = AVERAGE DAILY TRAFFIC ON THROUGH ROAD (VEHICLES PER DAY)

n = NUMBER OF MAILBOXES AT MAIL STOP

MINIMUM CLEARANCES TO NEAREST MAILBOX IN MAIL STOPS AT INTERSECTIONS

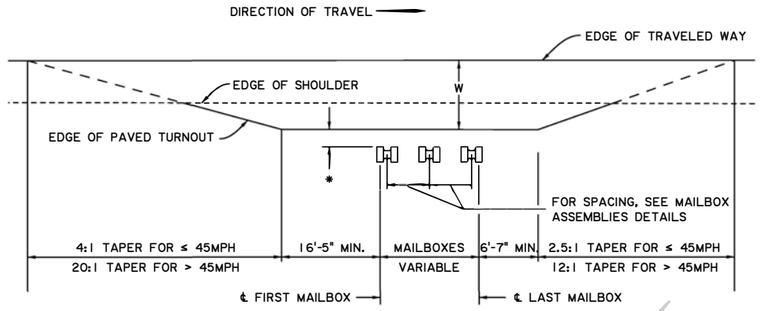

W = FOR SUGGESTED WIDTHS, SEE TABLE BELOW.
MAILBOXES = A MINIMUM DESIGN FOR ROADS CARRYING LOW-SPEED TRAFFIC AND FOR LOCAL AND COLLECTOR ROADS.
* = FOR MAILBOX FACE OFFSET, SEE TABLE BELOW, 0" - 12".

DETAIL OF MAILBOX TURNOUT

* SUGGESTED GUIDELINES FOR LATERAL PLACEMENT OF MAILBOXES

HIGHWAY TYPE AND ADT (VPD)	WIDTH OF ALL-WEATHER SURFACE TURNOUT OR AVAILABLE SHOULDER AT MAILBOX[c] (FT)		DISTANCE ROADSIDE FACE OF MAILBOX IS TO BE OFFSET BEHIND EDGE OF TURNOUT OR USABLE SHOULDER (IN)	
	PREFERRED	MINIMUM	PREFERRED	MINIMUM
RURAL HIGHWAY OVER 10,000	12	8	6 to 8	0
RURAL HIGHWAY 1,500 TO 10,000	12	8		
RURAL HIGHWAY 400 TO 1,500	10	8		
RURAL ROAD UNDER 400	8	6[b]		6[c]
RESIDENTIAL STREET WITHOUT CURB OR ALL-WEATHER SHOULDER	6	0		
CURBED RESIDENTIAL STREET OR URBAN AND SUBURBAN AREAS	NOT APPLICABLE		8 to 12[d]	6[d]

NOTES: ADT = AVERAGE DAILY TRAFFIC
VPD = VEHICLES PER DAY
a) IF INCREASE ACCESS IS NEEDED, THE FOLLOWING MAY BE CONSIDERED IN CONJUCTION WITH THE LOCAL POSTMASTER:
. PROVIDE A LEVEL CLEAR SPACE 30 IN. BY 48 IN. CENTERED ON THE BOX FOR EITHER SIDE OR FORWARD APPROACH.
. PROVIDE AN ACCESSIBLE PASSAGE TO AND FROM THE MAILBOX AND PROJECT INTO A CIRCULATION ROUTE--NO MORE THAN 4 IN. IF BETWEEN 28 IN. AND 80 IN.-- SO THAT THE MAILBOX DOES NOT BECOME A PROTRUDING OBJECT FOR PEDESTRIANS WITH IMPAIRED VISION.
b) PROVIDE AN ACCESSIBLE PASSAGE TO AND FROM THE MAILBOX. THE MAILBOX PROJECTION INTO A CIRCULATION ROUTE SHALL NOT BE MORE THAN 4 IN., SO THAT THE MAILBOX DOES NOT BECOME A PROTRUDING OBJECT FOR PEDESTRIANS WITH IMPAIRED VISION.
c) IF A TURNOUT IS PROVIDED, THIS MAY BE REDUCED TO ZERO.
d) BEHIND TRAFFIC-FACE OF CURB.

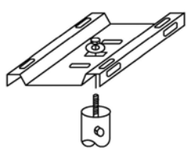

SINGLE MAILBOX MOUNT

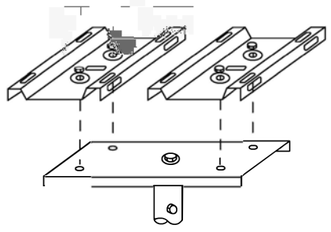

DOUBLE MAILBOX MOUNT

SINGLE AND DOUBLE
MAILBOX MOUNTS
SERIES C

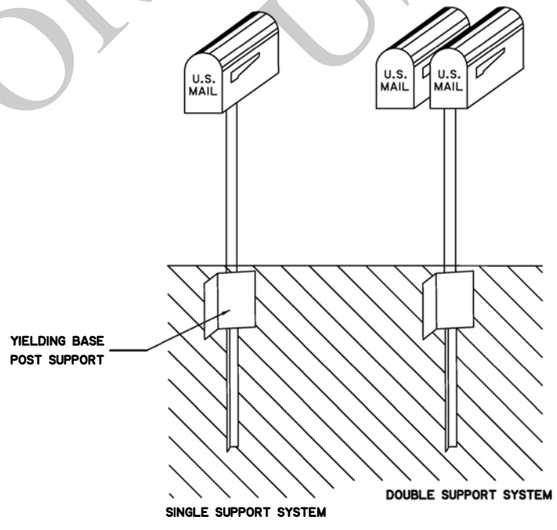

EXAMPLES OF
SINGLE AND DOUBLE MAILBOX INSTALLATIONS ⊗
SERIES C

⊗ NOTE: SUPPORT FRAME AND FOUNDATION SHOWN ARE PROPRIETARY PRODUCTS.

NOTES:

NO MAILBOX WILL BE PERMITTED WHERE ACCESS IS OBTAINED FROM THE LANES OF A FREEWAY OR WHERE ACCESS IS OTHERWISE PROHIBITED BY LAW OR REGULATION.

MAILBOXES SHALL BE LOCATED ON THE RIGHT-HAND SIDE OF THE ROADWAY IN THE DIRECTION OF DELIVERY ROUTE EXCEPT ON ONE-WAY STREETS WHERE THEY MAY BE PLACED ON EITHER SIDE. THE BOTTOM OF THE BOX SHALL BE SET AT AN ELEVATION (H) ESTABLISHED BY THE U.S. POSTAL SERVICE, USUALLY BETWEEN 3'4" AND 4'0" ABOVE THE ROADWAY SURFACE. THE ROADSIDE FACE OF THE BOX SHALL BE OFFSET FROM THE EDGE OF THE TRAVELED WAY. SEE THE SUGGESTED GUIDELINES FOR LATERAL PLACEMENT OF MAILBOXES AT LEFT.

ALL MAILBOX INSTALLATIONS MUST CONFORM TO THE REQUIREMENTS OF THE U.S. POSTAL SERVICE.

WHERE FEASIBLE, NEW INSTALLATION SHOULD BE LOCATED ON THE FAR RIGHT SIDE OF AN INTERSECTION WITH A ROAD OR DRIVEWAY ENTRANCE. HOWEVER, CONSIDERATION SHOULD BE GIVEN TO

- MINIMIZING WALKING DISTANCE WITHIN THE ROADWAY FOR THE PATRON,
- AVAILABLE STOPPING SIGHT DISTANCE IN ADVANCE OF THE MAILBOX SITE, AND
- POSSIBLE RESTRICTIONS TO CORNER SIGHT DISTANCES AT INTERSECTIONS AND DRIVEWAY ENTRANCES.

FOR LOCATION OF MAILBOXES AT AN INTERSECTING ROADWAY, SEE DETAIL AT LEFT.

MAILBOXES SHALL BE OF LIGHT SHEET METAL OR PLASTIC CONSTRUCTION MANUFACTURED BY AN APPROVED MANUFACTURERS CONFORMING TO THE REQUIREMENTS OF THE U.S. POSTAL SERVICE. MAILBOXES MUST BE FULL-SCALE CRASH TESTED IN ACCORDANCE WITH THE LATEST EDITION OF MASH. NEWSPAPER DELIVERY BOXES SHALL BE OF LIGHT SHEET METAL OR PLASTIC CONSTRUCTION OF MINIMUM DIMENSIONS SUITABLE FOR HOLDING A NEWSPAPER.

MANUFACTURERS WHOSE MAILBOXES HAVE BEEN APPROVED BY THE POSTMASTER GENERAL WILL BE LISTED IN THE POSTAL OPERATION MANUAL (POM) AND PUBLISHED IN THE POSTAL BULLETIN. NO MORE THAN TWO MAILBOXES MAY BE MOUNTED ON A SUPPORT STRUCTURE UNLESS THE SUPPORT STRUCTURE AND MAILBOX ARRANGEMENT HAVE BEEN SHOWN TO BE SAFE BY CRASH TESTING IN ACCORDANCE WITH THE LATEST EDITION OF MASH. HOWEVER, LIGHTWEIGHT NEWSPAPER BOXES MAY BE MOUNTED BELOW THE MAILBOX ON THE SIDE OF THE MAILBOX SUPPORT.

MAILBOX SUPPORTS SHALL NOT BE SET IN CONCRETE UNLESS THE SUPPORT DESIGN HAS BEEN SHOWN TO BE SAFE BY CRASH TESTING IN ACCORDANCE WITH THE LATEST EDITION OF MASH WHEN SO INSTALLED.

POSTS SHALL BE STRONG ENOUGH TO SUPPORT THE BOX, BUT CAPABLE OF BENDING WHEN STRUCK BY AN AUTOMOBILE OR A LIGHT TRUCK. MAXIMUM STRENGTH POSTS ARE EITHER A METAL POST WITH A STRENGTH NO GREATER THAN A 2" DIAMETER STANDARD STRENGTH STEEL PIPE OR A 2#/FT FLANGED CHANNEL OR A 4"X4" WOODEN POST. POSTS ARE ACCEPTABLE MAILBOX SUPPORTS WHEN EMBEDDED NO MORE THAN 24" INTO THE GROUND. A METAL POST SHALL NOT BE FITTED WITH AN ANCHOR PLATE, BUT MAY HAVE AN ANTI-TWIST DEVICE THAT EXTENDS NO MORE THAN 10" BELOW THE GROUND SURFACE.

THE POST-TO-BOX ATTACHMENT SHALL BE OF SUFFICIENT STRENGTH TO PREVENT THE BOX FROM SEPARATING FROM THE POST TOP IF THE INSTALLATION IS STRUCK BY AN AUTOMOBILE OR LIGHT TRUCK.

THE MINIMUM SPACING BETWEEN THE CENTERS OF SUPPORT POSTS SHALL BE THREE-FOURTHS THE HEIGHT OF THE POSTS ABOVE THE GROUND LINE

MAILBOX SUPPORT DESIGNS NOT DETAILED WILL BE ACCEPTABLE IF FULL-SCALE CRASH TESTED IN ACCORDANCE WITH THE LATEST EDITION OF MASH AND IF APPROVED BY THE ENGINEER.

FOR POST-TO-BOX ATTACHMENT DETAILS, SEE SHEET 2 OF 2.

MASH - MANUAL FOR ASSESSING SAFETY HARDWARE.

FOR INFORMATIONAL USE

SHEET NUMBER

PARISH | CONTROL SECTION | STATE PROJECT

DESIGN H. VU | CHECK D. SMITH | DETAIL H. VU | CHECK D. SMITH | REVIEW | SERIES # 1 OF 2

APPROVED BY CHIEF ENGINEER: DATE: 6/1/2026

REVISION OR CHANGE ORDER DESCRIPTION | BY | DATE | NO.

STATE OF LOUISIANA — DEPARTMENT OF TRANSPORTATION AND DEVELOPMENT

MAILBOX INSTALLATION DETAILS

MB-01

DOTD LOUISIANA DEPARTMENT OF TRANSPORTATION & DEVELOPMENT

STANDARD PLAN

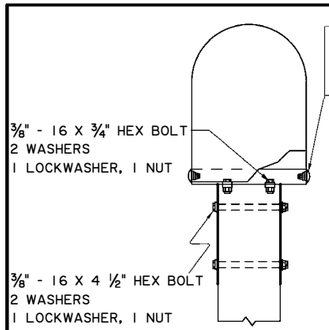

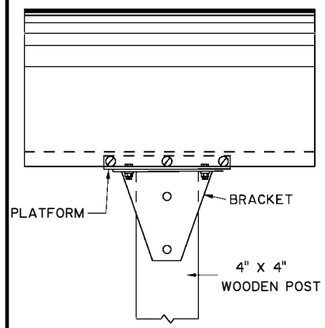

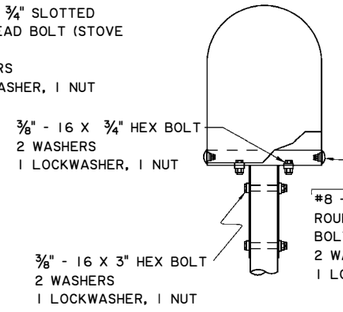

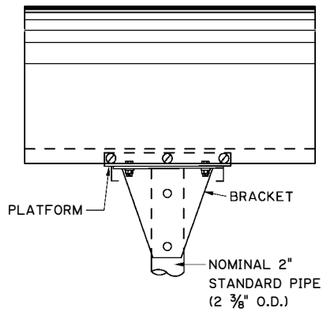

SINGLE AND DOUBLE MAILBOX ASSEMBLIES SERIES A

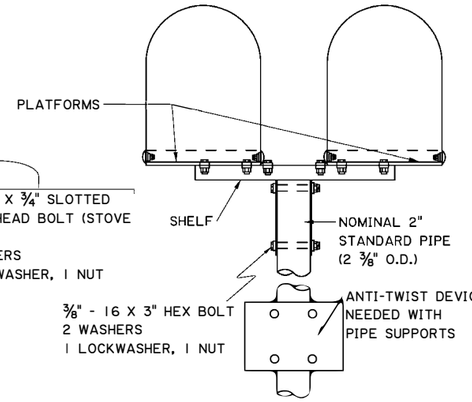

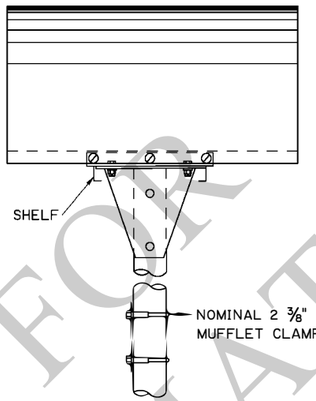

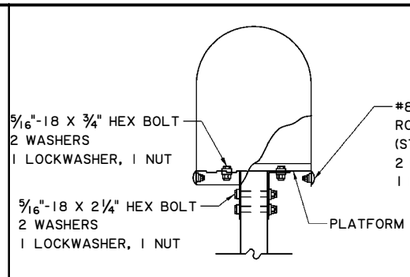

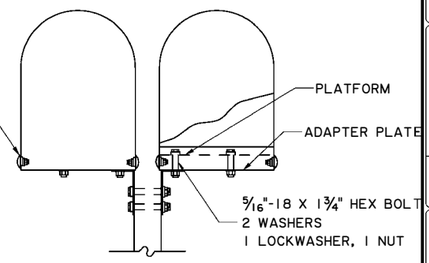

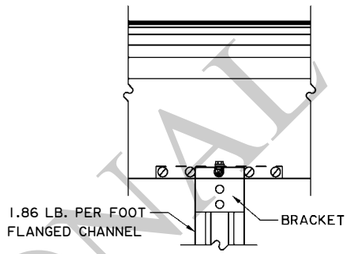

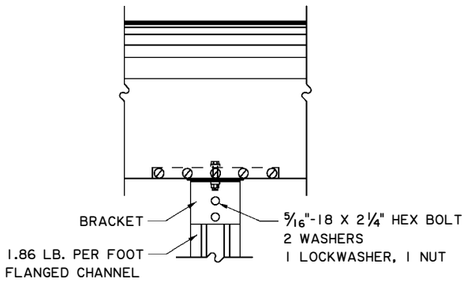

SINGLE AND DOUBLE MAILBOX ASSEMBLIES SERIES B

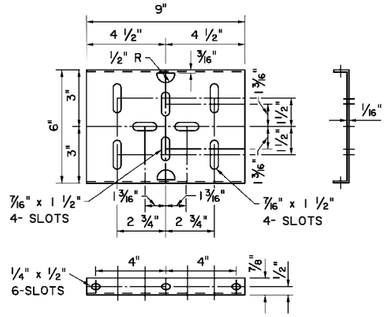

PLATFORM

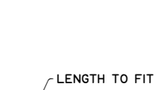

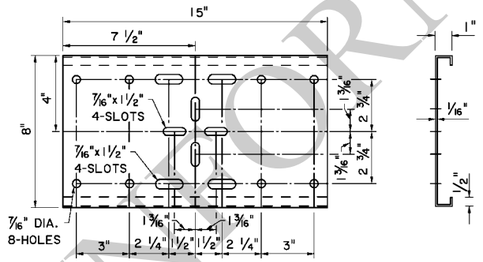

SHELF

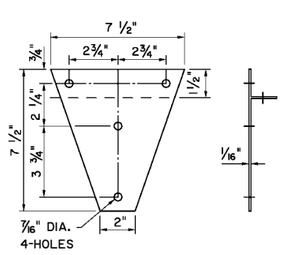

BRACKET

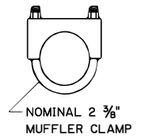

CLAMP

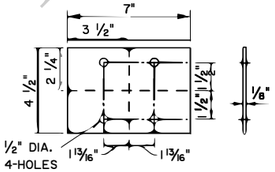

ANTI-TWIST DEVICE

MAILBOX SUPPORT HARDWARE SERIES A

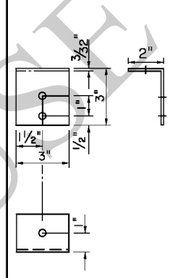

BRACKET

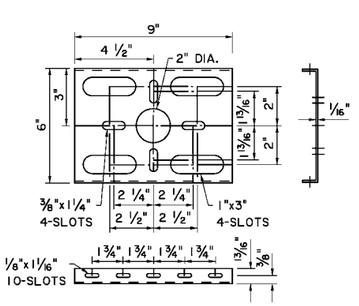

PLATFORM

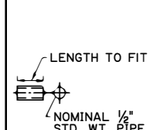

SPACER

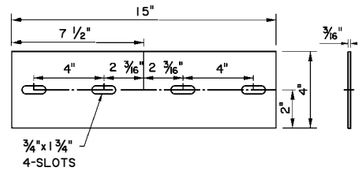

ADAPTER PLATE

MAILBOX SUPPORT HARDWARE SERIES B

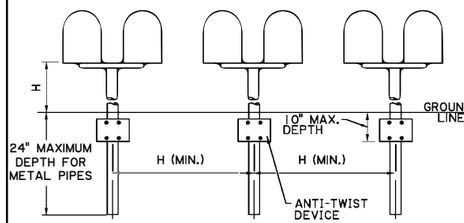

SPACING FOR MULTIPLE POST INSTALLATION SERIES A

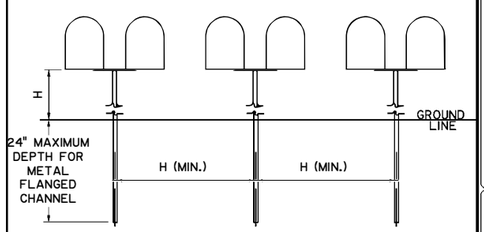

SPACING FOR MULTIPLE POST INSTALLATION SERIES B

FOR INFORMATIONAL USE

SHEET NUMBER

PARISH | CONTROL SECTION | STATE PROJECT

DESIGN H. VU | CHECK D. SMITH | DETAIL H. VU | CHECK D. SMITH | REVIEW | SERIES # 2 OF 2

APPROVED BY CHIEF ENGINEER: DATE: 6/1/2026

NO. | DATE | REVISION OR CHANGE ORDER DESCRIPTION | BY

STATE OF LOUISIANA DEPARTMENT OF TRANSPORTATION AND DEVELOPMENT

MAILBOX INSTALLATION DETAILS

MB-01

DOTD LOUISIANA DEPARTMENT OF TRANSPORTATION & DEVELOPMENT

STANDARD PLAN

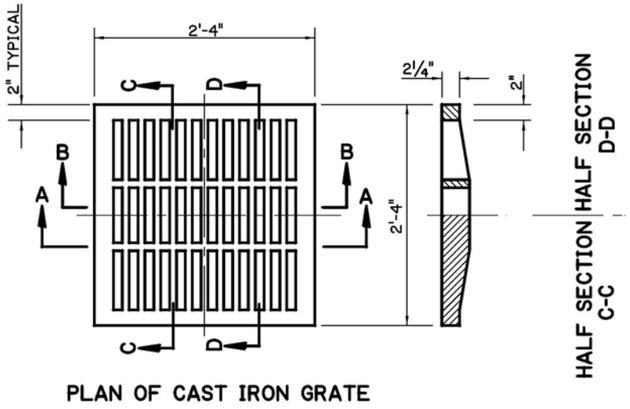

PLAN OF CAST IRON GRATE

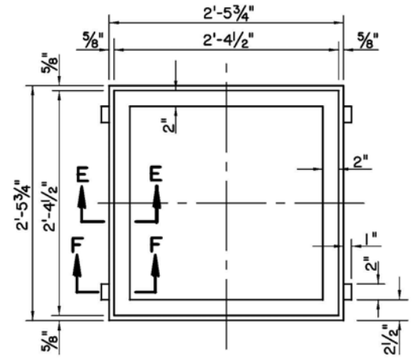

PLAN OF CAST IRON FRAME

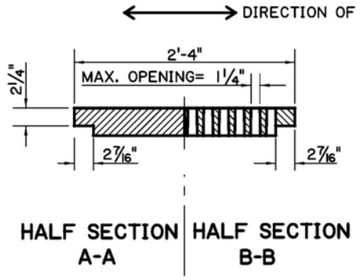

HALF SECTION A-A | HALF SECTION B-B

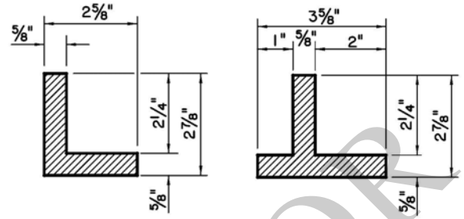

SECTION E-E | SECTION F-F

TYPE "A"

CAST IRON GRATE & FRAME

MIN. OPENING = 290 SQ. IN. AREA

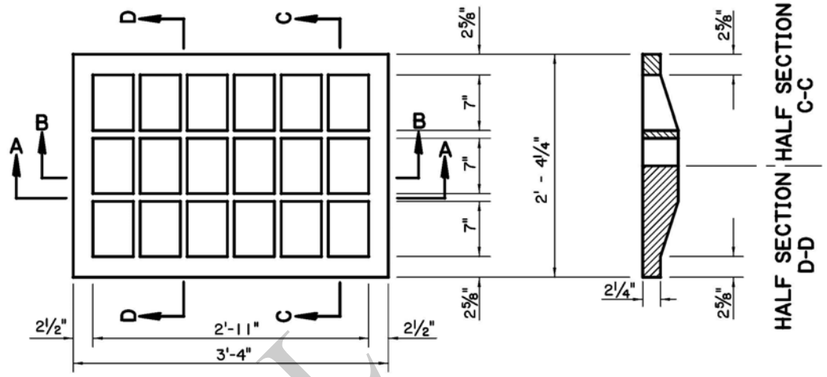

PLAN OF CAST IRON GRATE

HALF SECTION C-C | HALF SECTION D-D

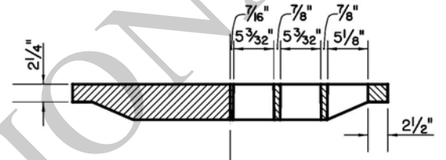

HALF SECTION A-A | HALF SECTION B-B

TYPE "B"

CAST IRON GRATE

NOTE: UNLESS OTHERWISE STATED, TYPE "E" FRAME WILL BE USED WITH THIS GRATE.

TYPE "C"

STEEL DRAIN GRATE

NOTES:
1. GRATES TO BE GALVANIZED AFTER FABRICATION.
2. UNLESS OTHERWISE STATED, TYPE "E1" FRAME IS TO BE USED WITH THESE GRATES. (SEE SHEET 2)
3. SUPPLIER OF GRATE ALSO IS TO FURNISH PRE-FITTED GRATE FRAME.

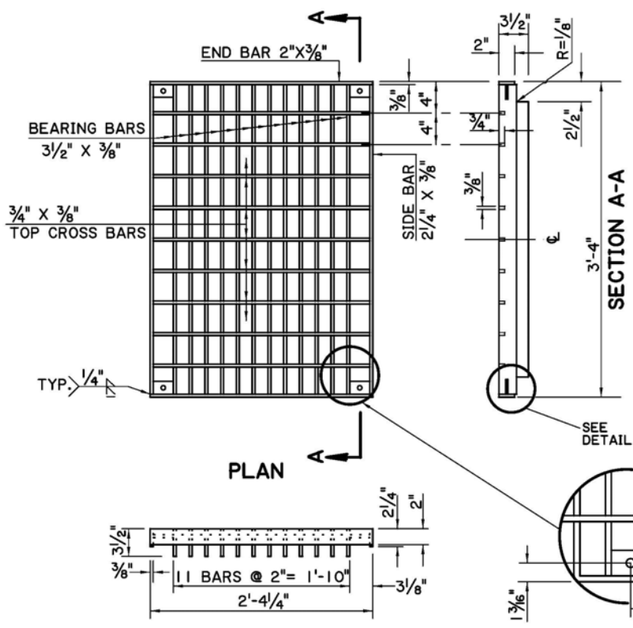

PLAN

ELEVATION

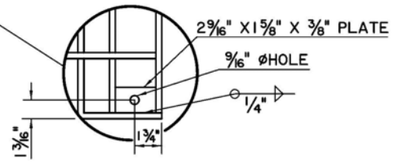

HOLD-DOWN PLATE

WELDED & SEALED DRAIN GRATE

ALL JOINTS FULL DEPTH ¼" FILLET WELDS WITH SEAL WELDS TOP AND BOTTOM UNLESS NOTED OTHERWISE.

ALL BEARING BARS TO BE SET FLUSH ON GRATE FRAME.

WEIGHT OF DRAIN GRATE = 233 LBS. ± 5%

RIVETED RETICULINE DRAIN GRATE (ALTERNATE)

ALL JOINTS FULL DEPTH ¼" FILLET WELDS WITH SEAL WELDS TOP AND BOTTOM UNLESS NOTED OTHERWISE.

ALL BEARING BARS TO BE SET FLUSH ON GRATE FRAME.

CENTER TO CENTER OF BEARING BARS EQUAL 2⅝" PLUS BEARING BAR THICKNESS.

WEIGHT OF DRAIN GRATE = 266 LBS. ± 5%

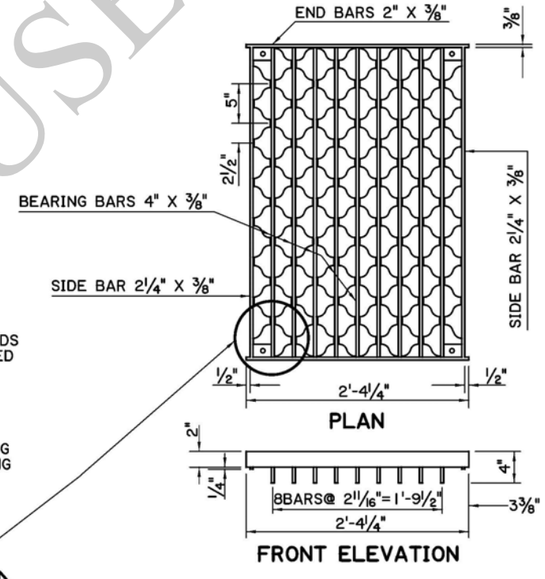

PLAN

FRONT ELEVATION

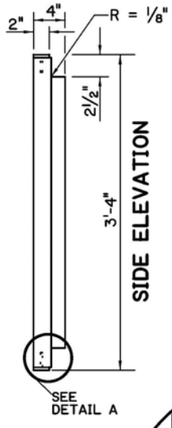

SIDE ELEVATION

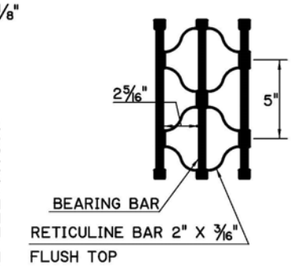

DRAIN GRATE DETAIL (ALTERNATE)

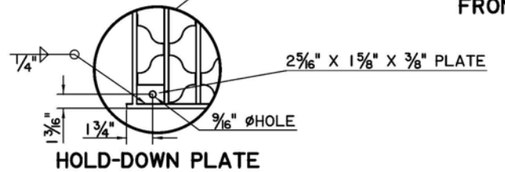

HOLD-DOWN PLATE

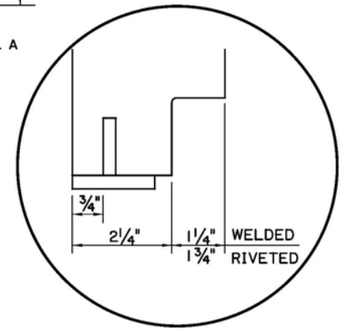

DETAIL A

FOR INFORMATIONAL USE ONLY

SHEET NUMBER

PARISH | CONTROL SECTION | STATE PROJECT

DESIGN AMA | CHECK AMA | DETAIL TL | CHECK AMA | REVIEW | SERIES # 1 OF 6

APPROVED BY CHIEF ENGINEER: DATE: 6/1/2026

REVISION OR CHANGE ORDER DESCRIPTION | NO. | DATE | BY

STATE OF LOUISIANA DEPARTMENT OF TRANSPORTATION AND DEVELOPMENT

DOTD LOUISIANA DEPARTMENT OF TRANSPORTATION & DEVELOPMENT

STANDARD PLAN

DETAILS OF GRATES, GRATE FRAMES AND COVERS FOR CATCH BASINS AND MANHOLES

MC-01

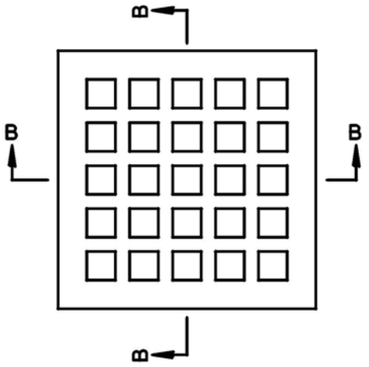

PLAN

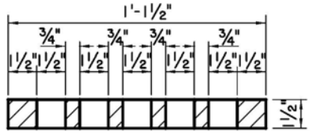

SECTION B-B

TYPE "D"

CAST IRON GRATE

WEIGHT OF CASTING = 49 LBS

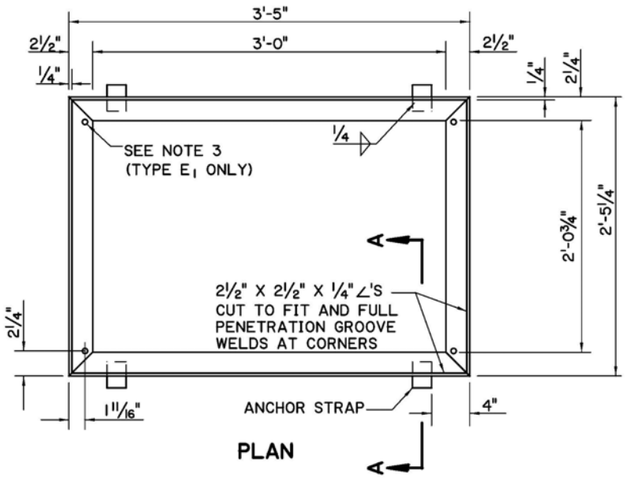

PLAN

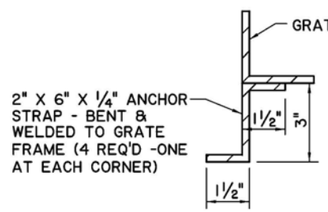

SECTION A-A

TYPE "E" AND "E1"

STEEL FRAME

NOTES:
1. GRATE FRAME TO BE GALVANIZED AFTER FABRICATION
2. WEIGHT OF GRATE FRAME = 52 LBS
3. SQUARE PUNCH HOLE PRIOR TO GALVANIZING. ADD A ⅜ ø x 2¼" LONG -16 UNC ROUND HEAD SQUARE NECK CARRIAGE BOLT WITH JAM NUT, HEX HEAD NUT, AND FLAT WASHER (ALL STAINLESS STEEL) AFTER FRAME IS GALVANIZED.

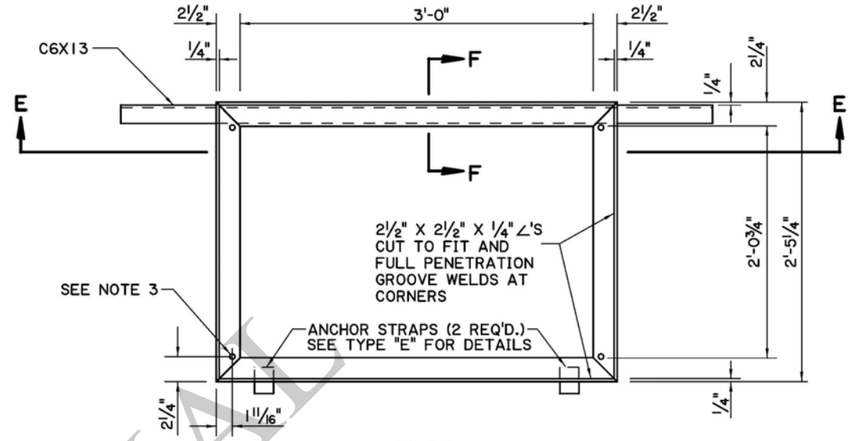

PLAN

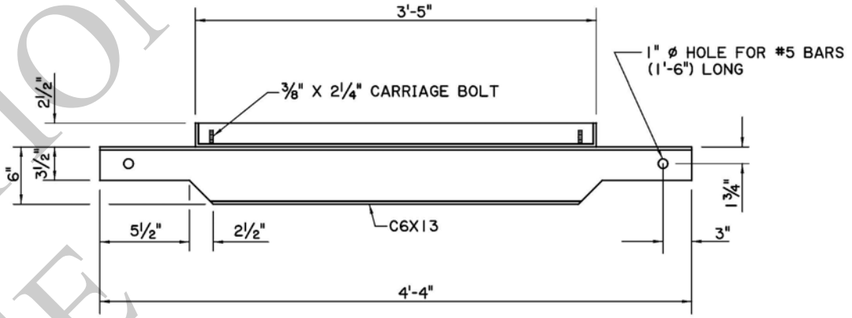

SECTION E-E

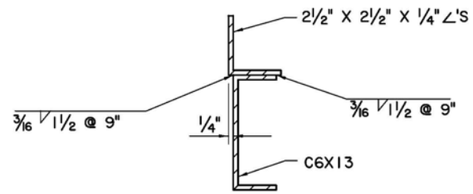

SECTION F-F

TYPE "F"

STEEL FRAME

NOTES:
1. GRATE FRAME TO BE GALVANIZED AFTER FABRICATION
2. WEIGHT OF GRATE FRAME = 52 LBS ± 5%
3. SQUARE PUNCH HOLE PRIOR TO GALVANIZING. ADD A ⅜ ø x 2¼" LONG -16 UNC ROUND HEAD SQUARE NECK CARRIAGE BOLT WITH JAM NUT, HEX HEAD NUT, AND FLAT WASHER (ALL STAINLESS STEEL) AFTER FRAME IS GALVANIZED.

FOR INFORMATIONAL USE

SHEET NUMBER

PARISH | CONTROL SECTION | STATE PROJECT

DESIGN AMA | CHECK AMA | DETAIL TL | CHECK AMA | REVIEW | SERIES # 2 OF 6

APPROVED BY CHIEF ENGINEER:

DATE: 6/1/2026

NO. | DATE | REVISION OR CHANGE ORDER DESCRIPTION | BY

STATE OF LOUISIANA DEPARTMENT OF TRANSPORTATION AND DEVELOPMENT

DETAILS OF GRATES, GRATE FRAMES AND COVERS FOR CATCH BASINS AND MANHOLES

MC-01

DOTD LOUISIANA DEPARTMENT OF TRANSPORTATION & DEVELOPMENT

STANDARD PLAN

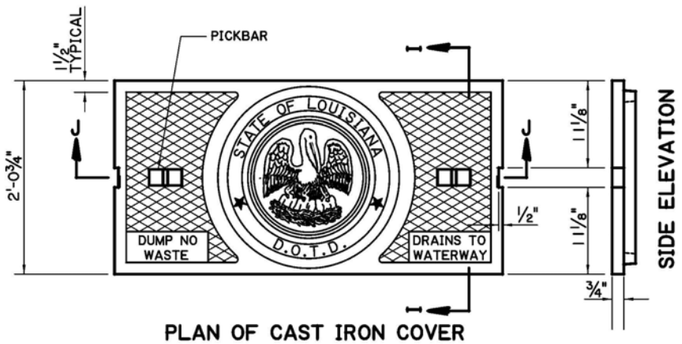

PLAN OF CAST IRON COVER

SIDE ELEVATION

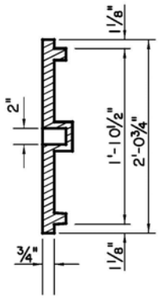

SECTION I-I

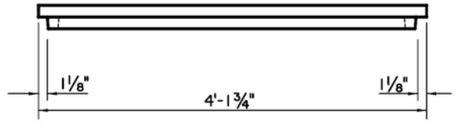

FRONT ELEVATION OF CAST IRON COVER

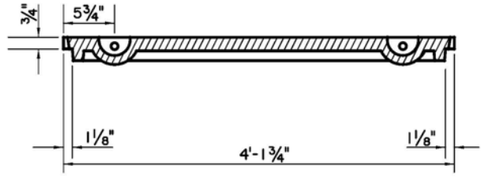

SECTION J-J

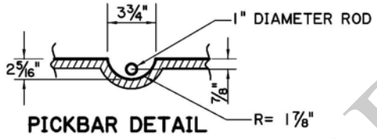

PICKBAR DETAIL

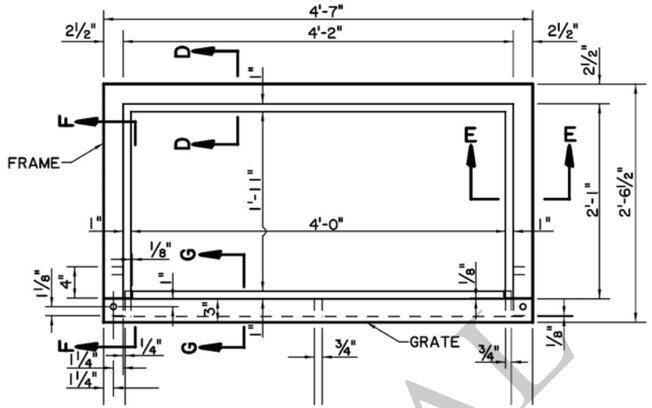

PLAN OF CAST IRON GRATE AND FRAME

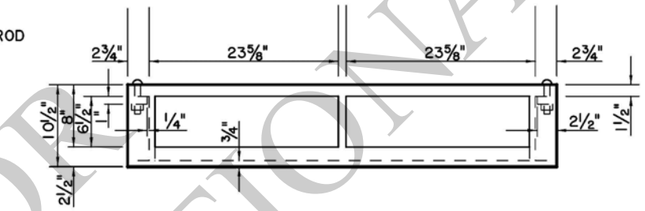

FRONT ELEVATION OF CAST IRON GRATE

TYPE "H" AND "H1"

CAST IRON COVER, GRATE AND FRAME

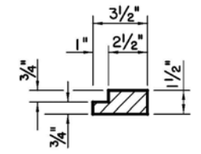

FOR CATCH BASIN "H"

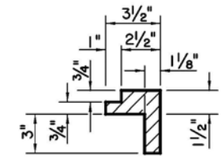

FOR PAVED GUTTER "H1"

SECTION D-D

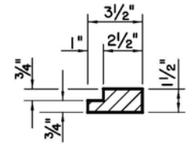

SECTION E-E

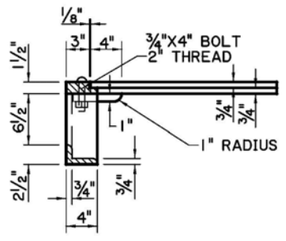

SECTION F-F

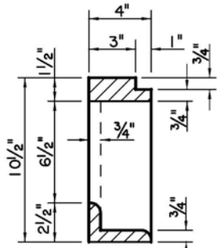

SECTION G-G

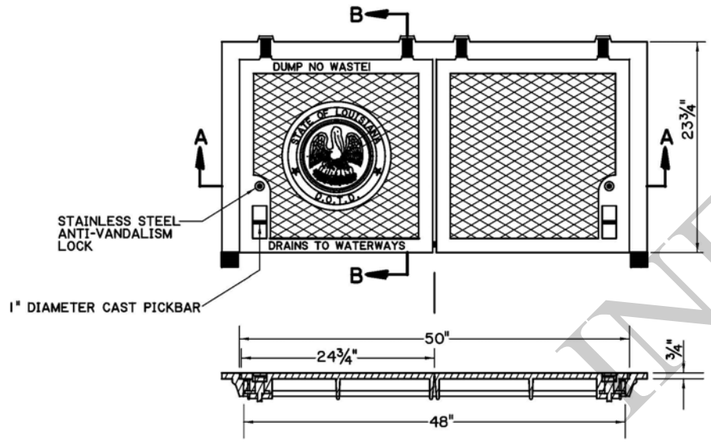

SECTION A-A

SECTION B-B

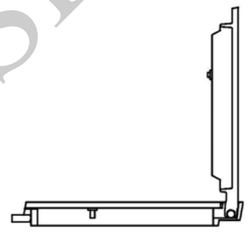

COVER AT 90 DEGREES
SAFETY STOP POSITION

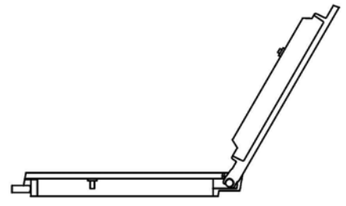

COVER FULLY OPEN
TO 120 DEGREES

TYPE "HS"

CAST IRON COVER AND FRAME SHOWN (SEE GRATE ABOVE)

FOR INFORMATIONAL USE

SHEET NUMBER

PARISH | CONTROL SECTION | STATE PROJECT

DESIGN AMA | DETAIL TL
CHECK AMA | CHECK AMA
REVIEW | SERIES # 3 OF 6

APPROVED BY CHIEF ENGINEER:

DATE: 6/1/2026

NO.	DATE	REVISION OR CHANGE ORDER DESCRIPTION	BY

DETAILS OF GRATES, GRATE FRAMES AND COVERS FOR CATCH BASINS AND MANHOLES

MC-01

DOTD LOUISIANA DEPARTMENT OF TRANSPORTATION & DEVELOPMENT

STANDARD PLAN

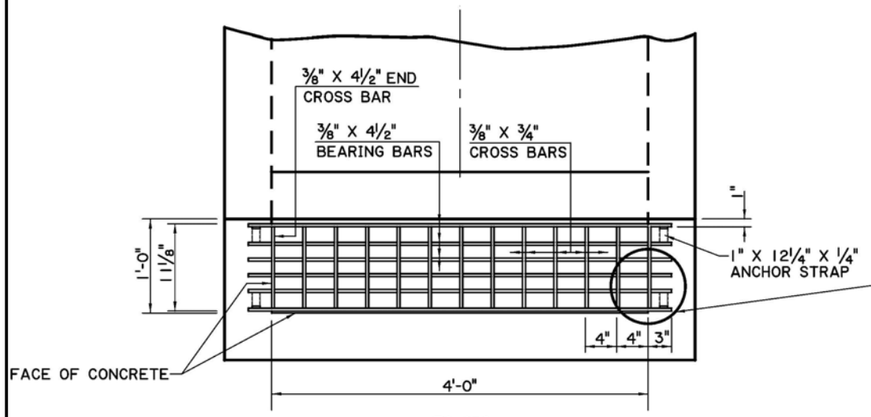

PLAN

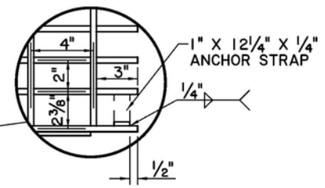

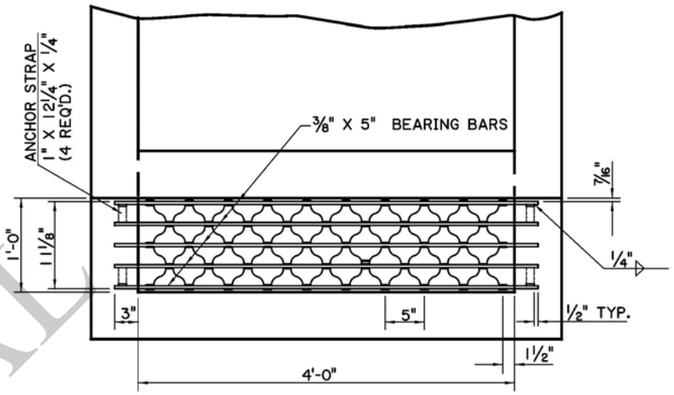

PLAN

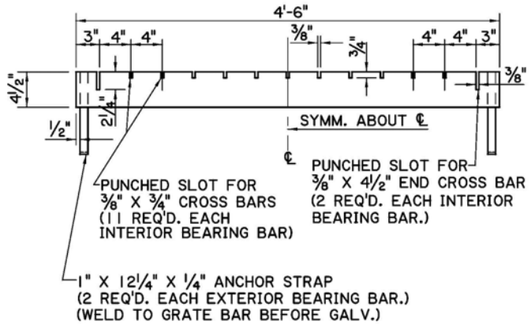

ELEVATION

WELDED & SEALED DRAIN GRATE

ALL JOINTS FULL DEPTH 1/4" FILLET WELDS WITH SEAL WELD TOP AND BOTTOM UNLESS NOTED OTHERWISE.

WEIGHT OF DRAIN GRATE = 185 LBS. ± 5%

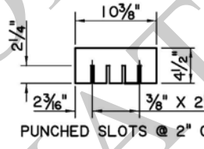

3/8"X4 1/2" END CROSS BAR

(2 REQ'D. PER GRATE)

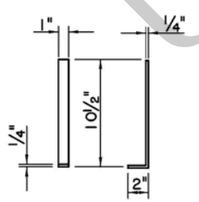

STEEL ANCHOR STRAP

(4 REQ'D. PER GRATE)

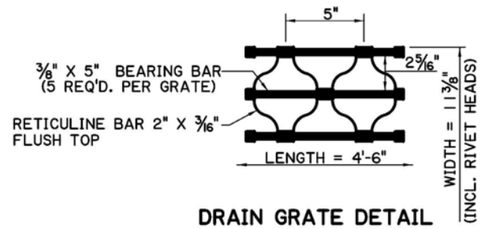

DRAIN GRATE DETAIL (ALTERNATE)

RIVETED RETICULINE DRAIN GRATE (ALTERNATE)

CENTER TO CENTER OF BEARING BARS EQUAL 2 11/16".

WEIGHT OF DRAIN GRATE = 176 LBS. ± 5%

TYPE " I "

STEEL DRAIN GRATE

GRATE TO BE GALVANIZED AFTER FABRICATION.

FOR INFORMATIONAL USE

SHEET NUMBER

PARISH | CONTROL SECTION | STATE PROJECT

DESIGN AMA
CHECK AMA
DETAIL TL
CHECK AMA
REVIEW
SERIES # 4 OF 6

APPROVED BY CHIEF ENGINEER:

DATE: 6/1/2026

NO.	DATE	REVISION OR CHANGE ORDER DESCRIPTION	BY

DETAILS OF GRATES, GRATE FRAMES AND COVERS FOR CATCH BASINS AND MANHOLES

MC-01

DOTD LOUISIANA DEPARTMENT OF TRANSPORTATION & DEVELOPMENT

STANDARD PLAN

PLAN OF CAST IRON COVER

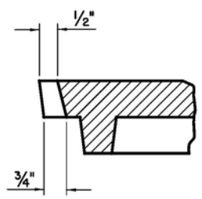

PICKSLOT DETAIL

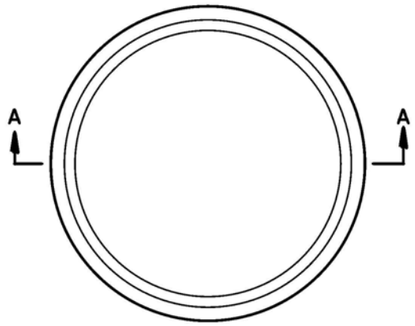

PLAN OF CAST IRON FRAME

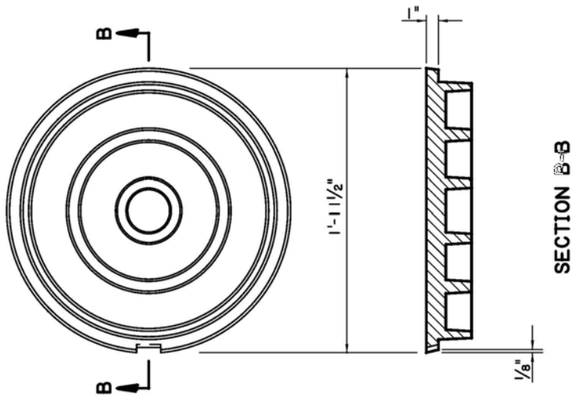

BOTTOM OF CAST IRON COVER

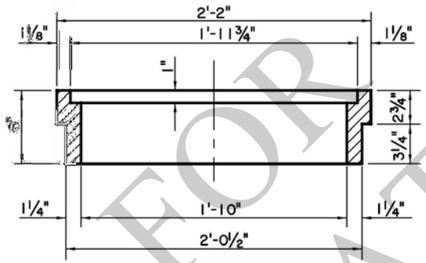

SECTION A-A

TYPE "K"

CAST IRON COVER & FRAME

PICKBAR DETAIL LEFT TO FABRICATOR

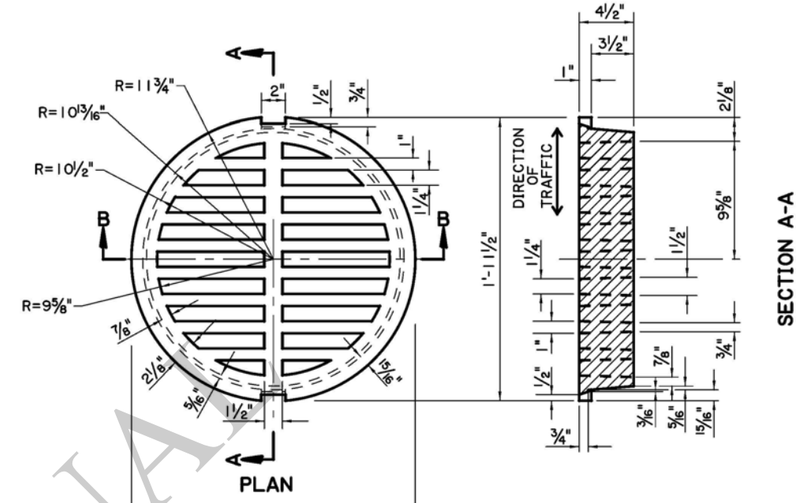

PLAN

SECTION A-A

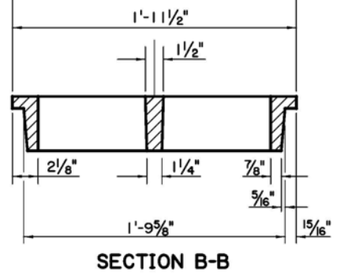

SECTION B-B

TYPE "K1"

CAST IRON GRATE

NOTES: 1. APPROX. WEIGHT OF CAST IRON COVER = 250 LBS.
2. TO BE USED WITH TYPE "K" CAST IRON FRAME.

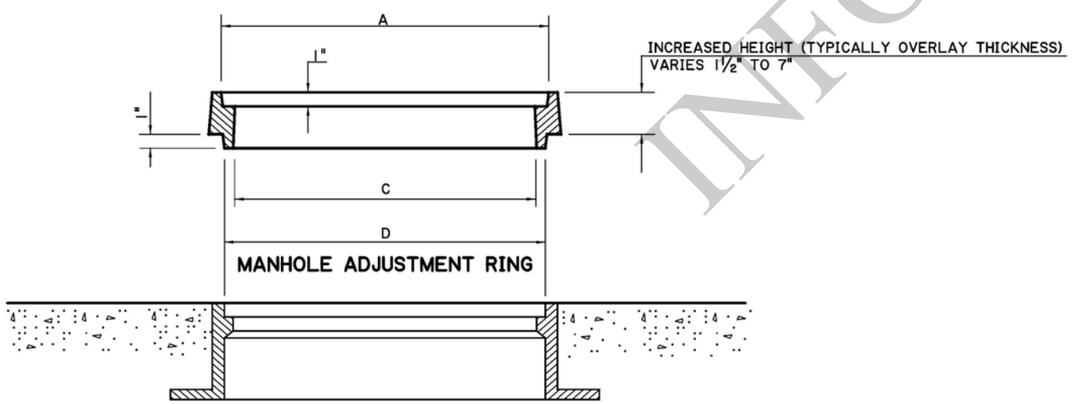

EXISTING GRATE SEAT

MANHOLE ADJUSTMENT RINGS		
A (IN.)	C (IN.)	D (IN.)
23½	22¼	23½
23¾	22½	23¾

MANHOLE ADJUSTMENT RING

CAST IRON OR STEEL

FOR INFORMATIONAL USE

SHEET NUMBER

PARISH | CONTROL SECTION | STATE PROJECT

DESIGN AMA
CHECK AMA
DETAIL TL
CHECK AMA
REVIEW
SERIES # 5 OF 6

APPROVED BY CHIEF ENGINEER:
DATE: 6/1/2026

NO.	DATE	REVISION OR CHANGE ORDER DESCRIPTION	BY

DETAILS OF GRATES, GRATE FRAMES AND COVERS FOR CATCH BASINS AND MANHOLES

MC-01

DOTD
LOUISIANA DEPARTMENT OF TRANSPORTATION & DEVELOPMENT

STANDARD PLAN

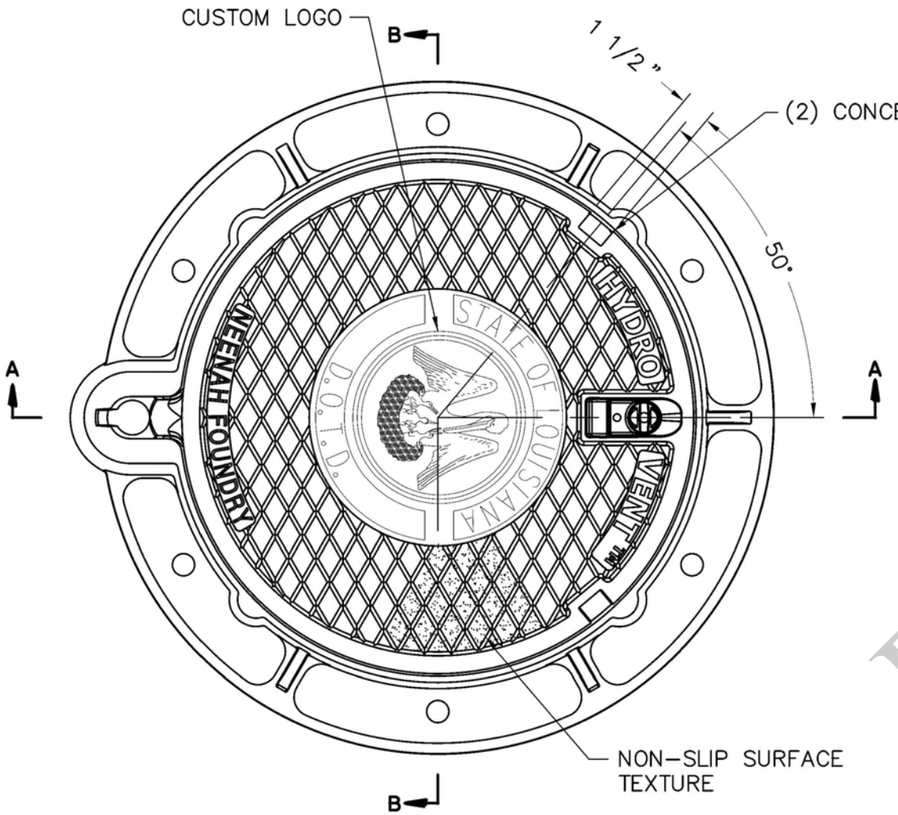

PLAN OF CAST IRON COVER

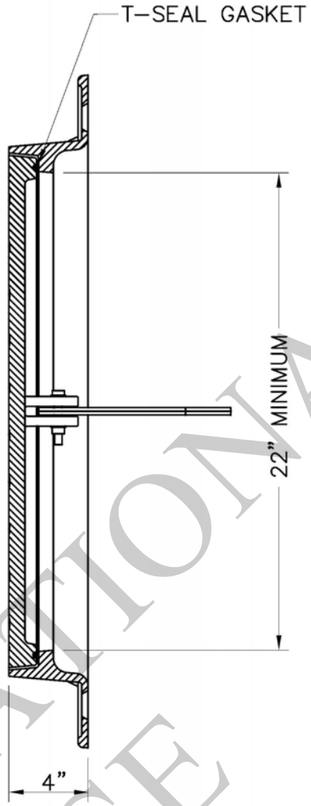

SECTION B-B

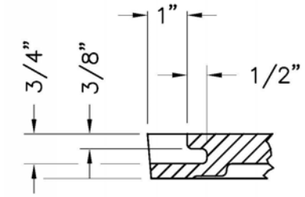

CONCEALED PICKHOLE DETAIL

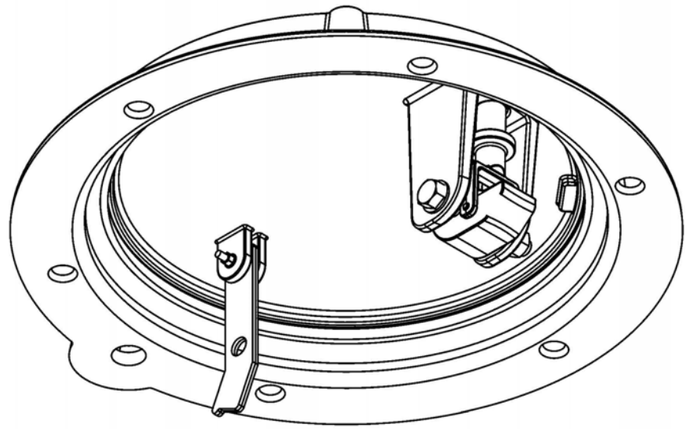

ISOMETRIC BOTTOM VIEW

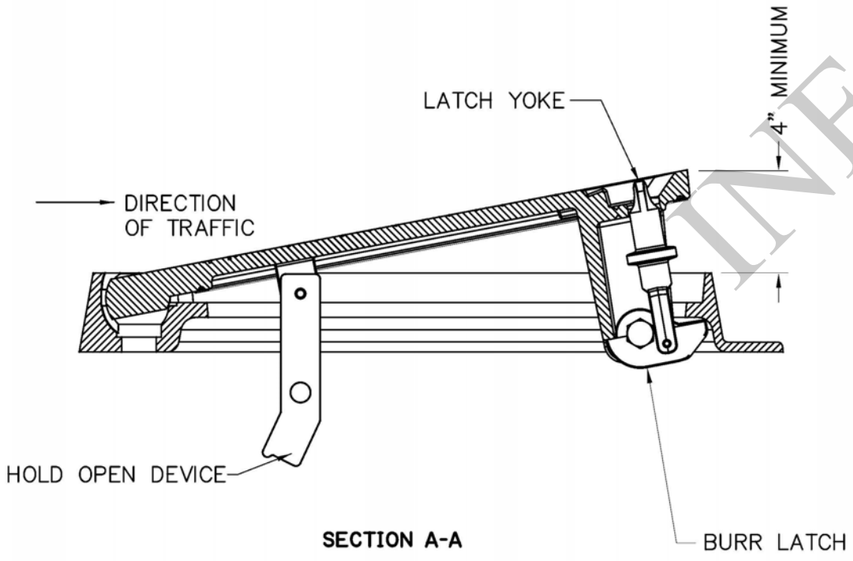

SECTION A-A

VENTING MANHOLE

CAST IRON COVER AND FRAME

NEENAH FOUNDRY 1650-HV SHOWN
EJ STORMSURGE 24 APPROVED BUT NOT SHOWN

FOR INFORMATIONAL USE

SHEET NUMBER

PARISH | CONTROL SECTION | STATE PROJECT

DESIGN AMA | CHECK AMA | DETAIL TL | CHECK AMA | REVIEW | SERIES # 6 OF 6

APPROVED BY CHIEF ENGINEER:

DATE: 6/1/2026

NO.	DATE	REVISION OR CHANGE ORDER DESCRIPTION	BY

DETAILS OF GRATES, GRATE FRAMES AND COVERS FOR CATCH BASINS AND MANHOLES

MC-01

DOTD LOUISIANA DEPARTMENT OF TRANSPORTATION & DEVELOPMENT

STANDARD PLAN

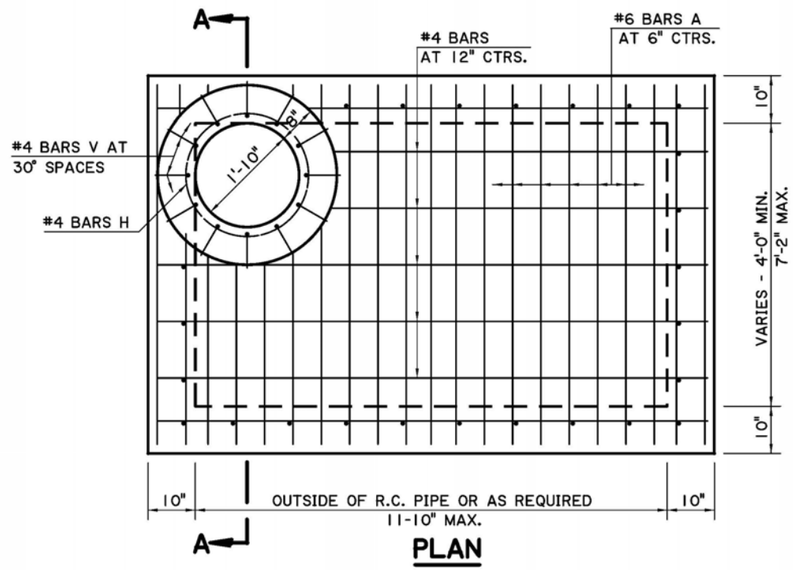

PLAN

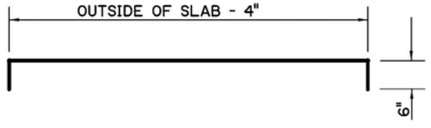

#6 BARS A

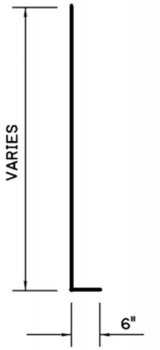

#4 BARS V

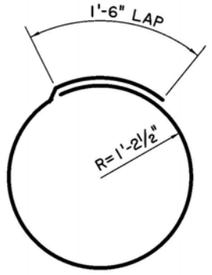

#4 BARS H

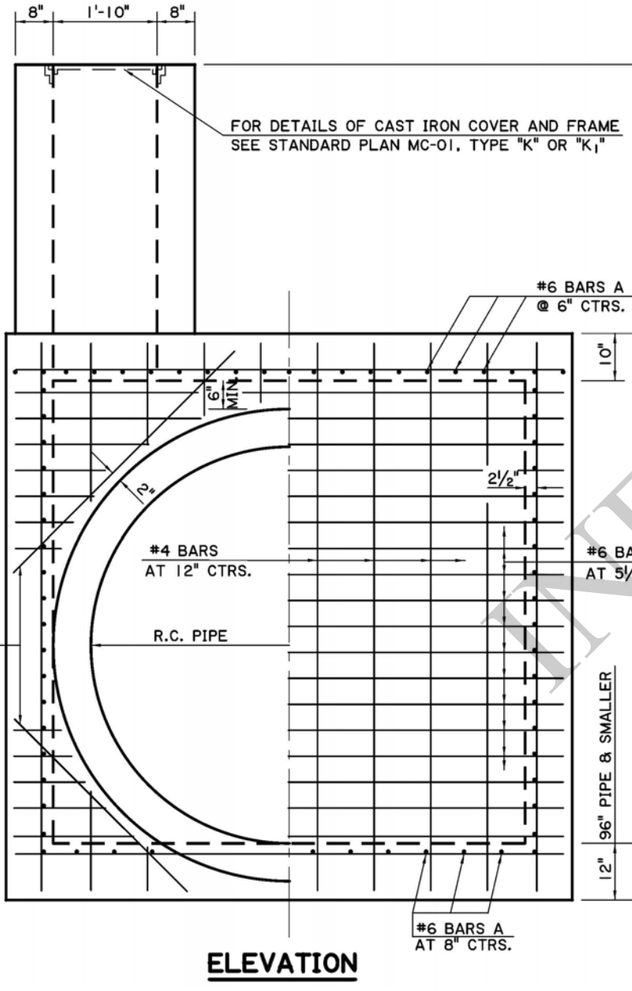

ELEVATION

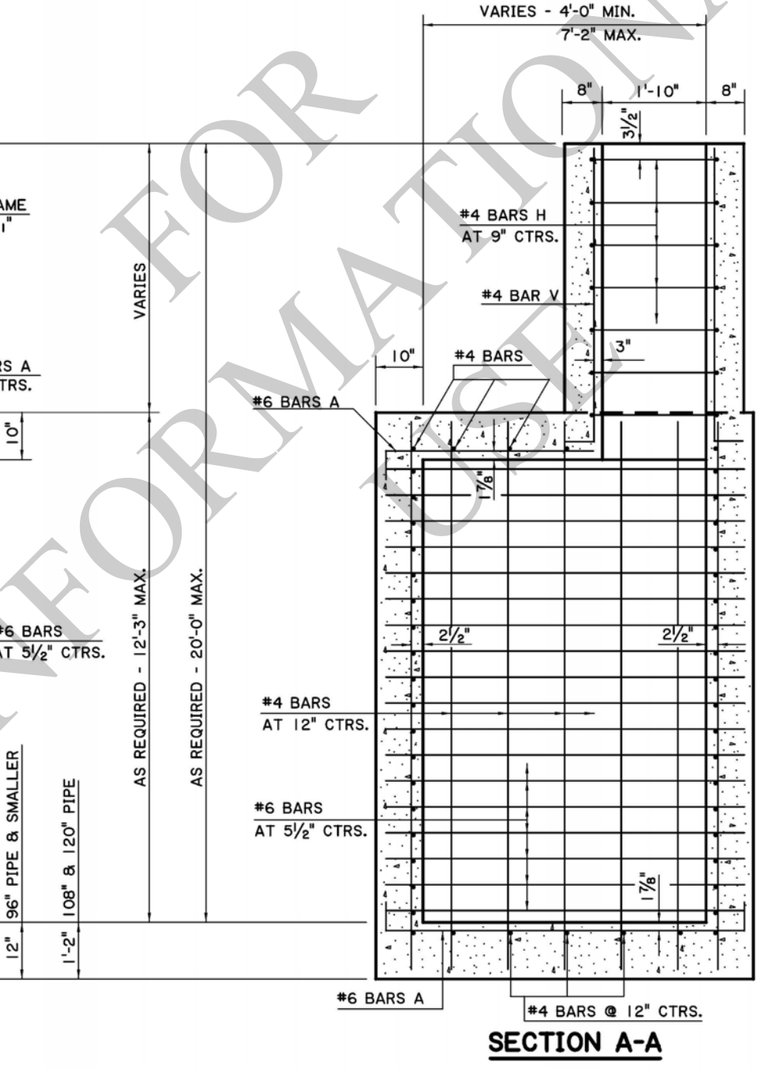

SECTION A-A

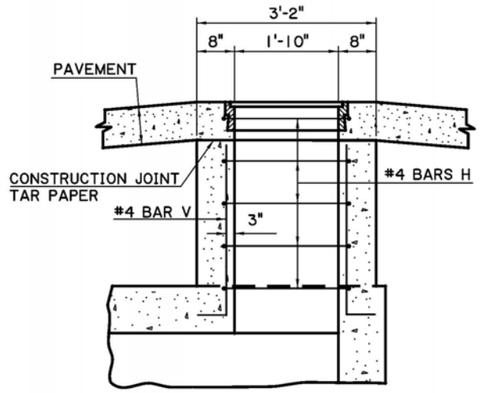

DETAIL A

(MANHOLE IN PAVEMENT AREA)

GENERAL NOTES:

1. MANHOLE IS DESIGNED ACCORDING TO 4TH ED. 2007 AASHTO LRFD PROCEDURES. SECTION 702 OF THE DOTD STANDARD SPECIFICATIONS SHALL APPLY.
2. CONCRETE: ALL CONCRETE SHALL BE CLASS "M" MINOR STRUCTURE. ALL EXPOSED EDGES SHALL BE CHAMFERED ¾ IN. EXCEPT AS NOTED.
3. REINFORCING STEEL: REINFORCING STEEL SHALL BE GRADE 60. DIMENSIONS ARE TO BAR CENTERS. MINIMUM COVER FOR REINFORCING BARS SHALL BE 2 IN. CLEAR UNLESS SHOWN OTHERWISE.
4. SEE "DETAIL A" FOR DETAILS OF MANHOLE IN A PAVEMENT AREA.
5. THE CONTRACTOR WILL NOT POUR ABOVE THE BOTTOM OF THE SLAB UNTIL THE PAVING ADJACENT TO THE MANHOLE HAS BEEN COMPLETED.

FOR INFORMATIONAL USE

SHEET NUMBER

PARISH | CONTROL SECTION | STATE PROJECT

DESIGN CDJ | CHECK HJB | DETAIL CDJ | CHECK HJB | REVIEW | SERIES # 1 OF 1

APPROVED BY CHIEF ENGINEER:

DATE: 6/1/2026

NO.	DATE	REVISION OR CHANGE ORDER DESCRIPTION	BY

STATE OF LOUISIANA DEPARTMENT OF TRANSPORTATION & DEVELOPMENT

R.C. MANHOLE

MAXIMUM DIMENSIONS: 11'10" X 7'2"

MAXIMUM DEPTH: 20'

MH-06

DOTD LOUISIANA DEPARTMENT OF TRANSPORTATION & DEVELOPMENT

STANDARD PLAN

08:21
5/21/2021

MISCELLANEOUS SPAN DETAILS INDEX

	SERIES	DESCRIPTION
COMMON	1 OF 1	INDEX, CROWN, DECK PLACEMENT, FORMWORK @ LINK SLAB
DECK DRAINS	1 OF 1	DECK DRAINS
EXPANSION JOINTS	1 OF 2	SEALED EXPANSION JOINT - END DAMS AND PREFORMED NEOPRENE
	2 OF 2	SEALED EXPANSION JOINT - END DAMS AND PREFORMED NEOPRENE
	1 OF 2	SEALED EXPANSION JOINT - END DAMS AND PREFORMED SILICONE
	2 OF 2	SEALED EXPANSION JOINT - END DAMS AND PREFORMED SILICONE
	1 OF 1	POURED SILICONE JOINT

MISCELLANEOUS SPAN GENERAL NOTES:

1. SHEETS LISTED IN THE INDEX THAT DO NOT APPLY TO THE PROJECT HAVE NOT BEEN INCLUDED IN THE PLANS.
2. UNLESS STATED OTHERWISE, SECTION NUMBER REFERENCES (SUCH AS "SECTION 805") ARE TO THE LOUISIANA STANDARD SPECIFICATIONS FOR ROADS AND BRIDGES.

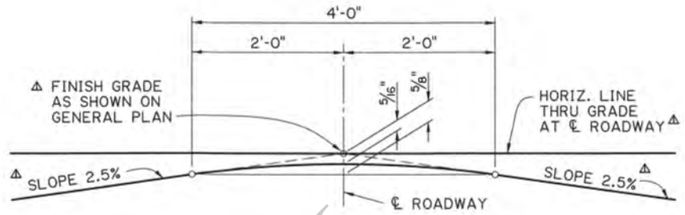

PARABOLIC CROWN AT ROADWAY
(N.T.S.)
⚠ UNLESS OTHERWISE NOTED IN PLANS

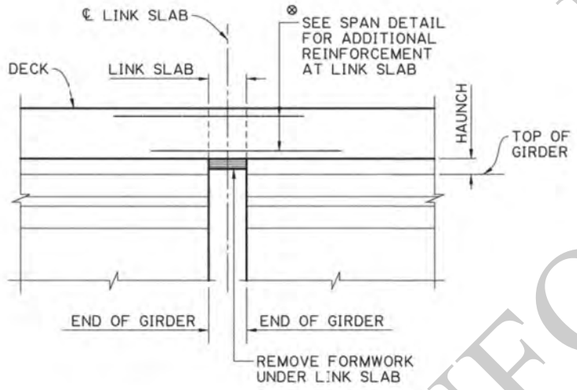

FORMWORK AT LINK SLAB
(N.T.S.)
⊗ DECK REINFORCEMENT NOT SHOWN FOR CLARITY. DO NOT PLACE DECK REINFORCEMENT SPLICES WITHIN LIMITS OF LINK SLAB REINFORCEMENT.

DECK PLACEMENT NOTES:

1. CONFORM TO SECTION 805.
2. PLACE DECK UNIT USING ONE CONTINUOUS PLACEMENT.
3. PREVENT INITIAL SET FROM OCCURING WITHIN AND DURING PLACEMENT.
4. LIMIT PLACEMENT DURATION TO 4 HOURS MAXIMUM. IF MORE TIME IS NEEDED, INCLUDE METHOD AND SPECIFICATIONS FOR REDUCING CONCRETE SET TIME IN THE CONCRETE PLACEMENT PLAN REQUIRED BY SECTION 805.
5. IF DECK UNIT PLACEMENT CANNOT BE CONTINUOUS, THE SEGMENTED PLACEMENT SHOWN BELOW MAY BE USED IF PERMITTED BY THE ENGINEER. PLACE AND CURE SEGMENTS "A" TOGETHER PRIOR TO PLACING AND CURING SEGMENTS "B."

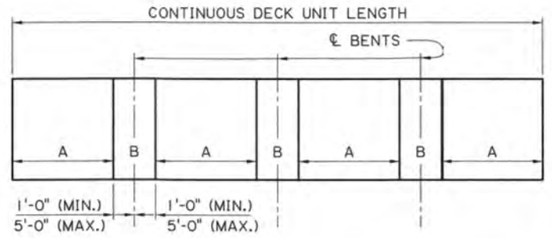

SEGMENTED DECK PLACEMENT SEQUENCE
(N.T.S.)

FOR INFORMATIONAL USE

SHEET NUMBER

PARISH	CONTROL SECTION	STATE PROJECT

DESIGN	CHECK	DETAIL	CHECK	REVIEW	SERIES #
A.LANCASTER	K. KEMP	A.LANCASTER	K. KEMP	Y. SHEN	1 OF 1

STATE OF LOUISIANA
ADAM LANCASTER
License No. 35573
PROFESSIONAL ENGINEER
IN
CIVIL ENGINEERING
5/4/2021

APPROVED BY CHIEF ENGINEER: DATE: 5/12/2021

MISC. SPAN DETAILS
INDEX, CROWN, DECK PLACEMENT FORMWORK @ LINK SLAB
SPAN-COMMON
STANDARD PLAN

DOTD
LOUISIANA DEPARTMENT OF TRANSPORTATION & DEVELOPMENT
BRIDGE AND STRUCTURAL DESIGN

IP_PWP:d0964968\BD.5.1.0.01 - Index - Crown Placement Sequence_raster.dgn

08:23
5/21/2021

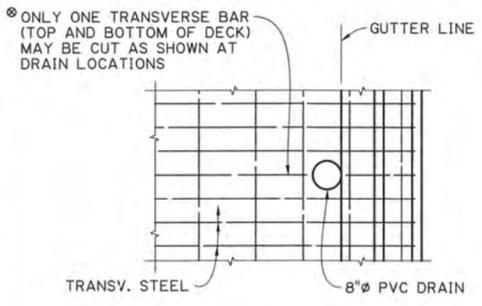

PLAN AT DECK DRAIN
(GIRDER BRIDGE)

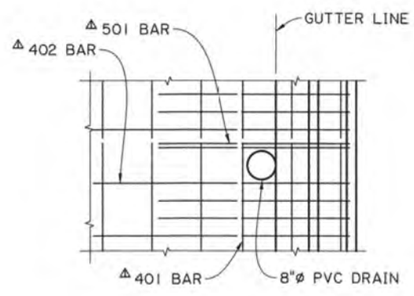

PLAN AT DECK DRAIN
(SLAB SPAN - TOP STEEL)

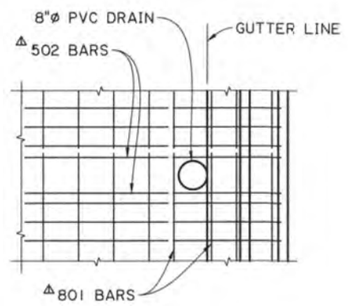

PLAN AT DECK DRAIN
(SLAB SPAN - BOTTOM STEEL)

NOTES:

1. PVC DECK DRAINS REQUIRED IF BRIDGE RAILING SLOT DRAINS ARE NOT USED. SEE PROJECT PLANS FOR SPECIFIED TYPE AND LOCATION OF DECK DRAINAGE DEVICES.
△ 2. A ½" EXTENSION OF DECK DRAIN PIPE BELOW THE BOTTOM OF THE DECK MAY BE USED IN LIEU OF CIRCULAR DRIP BEAD.
☒ 3. FOR DECK OVERHANGS LESS THAN 4'-4" USING LG GIRDERS, SLOTTED BARRIERS OR AN ALTERNATE DECK DRAIN CONFIGURATION MUST BE USED.
△ 4. ADJUST SLAB SPAN TOP AND BOTTOM STEEL AS NEEDED (BY SHIFTING OR BUNDLING TO ADJACENT REBAR) TO AVOID DECK DRAINS. MAINTAIN MINIMUM SPECIFIED CONCRETE COVER.
5. BRIDGE RAILING SLOT DRAINS WILL BE PAID FOR AS PART OF THE BRIDGE RAILING PAY ITEM. DECK DRAIN PIPES WILL BE PAID FOR AS PART OF THE DECK CONCRETE PAY ITEM.

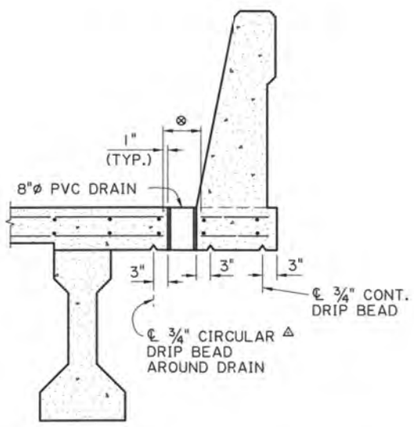

SECTION AT DECK DRAIN - AASHTO GIRDER
(N.T.S.)

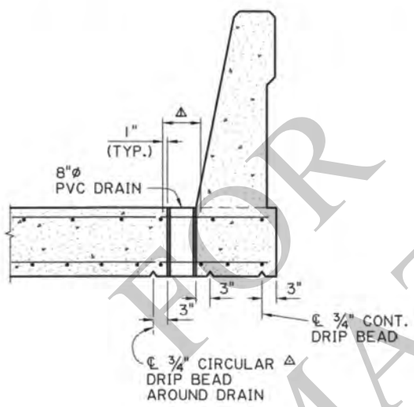

SECTION AT DECK DRAIN - SLAB SPAN
(N.T.S.)

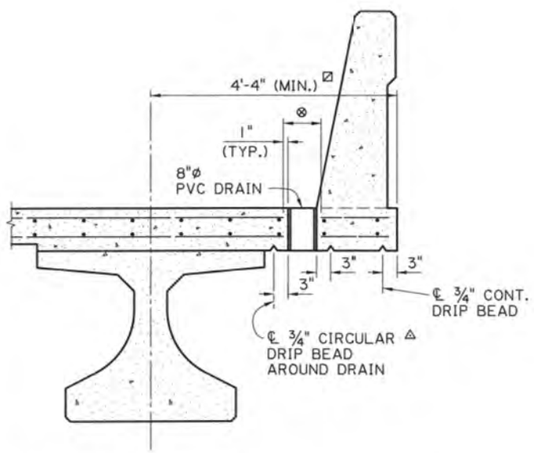

SECTION AT DECK DRAIN - LG GIRDER
(N.T.S.)

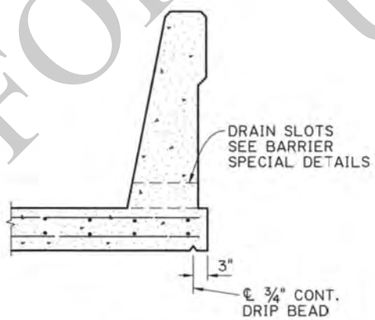

SECTION THRU SLOTTED BARRIER
(GIRDER OR SLAB SPAN BRIDGES)
(N.T.S.)

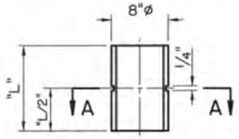

ELEVATION

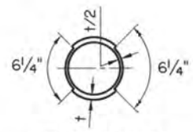

SECTION A-A

DETAIL "A" - PVC DRAIN
SHOWING GROOVE DETAILS
(N.T.S.)

FOR INFORMATIONAL USE

SHEET NUMBER

PARISH	CONTROL SECTION	STATE PROJECT

DESIGN	A.LANCASTER
CHECK	K. KEMP
DETAIL	A.LANCASTER
CHECK	K. KEMP
REVIEW	Y. SHEN
SERIES #	1 OF 1

STATE OF LOUISIANA
ADAM LANCASTER
License No. 35573
PROFESSIONAL ENGINEER
IN
CIVIL ENGINEERING
c/4/2021

APPROVED BY CHIEF ENGINEER: DATE: 5/12/2021

MISC. SPAN DETAILS
DECK DRAINS

DECK-DRAIN

STANDARD PLAN

DOTD
LOUISIANA DEPARTMENT OF TRANSPORTATION & DEVELOPMENT
BRIDGE AND STRUCTURAL DESIGN

IP_PWP:d0964968\BD.5.2.0.01 - Deck Drainage_raster.dgn

IP_PWP:d0964968\BD.5.3.0.01 - Sealed Expansion Joint (Preformed Neoprene 1 of 2)_raster.dgn 5/21/2021 08:24

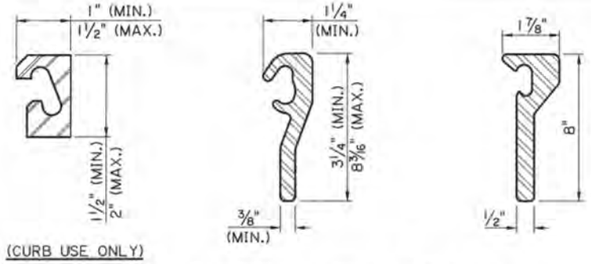

(CURB USE ONLY)

TYPICAL STEEL EXTRUSIONS (END DAMS)

TYPICAL NEOPRENE SEALS

END DAM INSTALLATION PROCEDURE:

1. PLACE END DAM ASSEMBLY AS A UNIT WITH PIPE SPACERS AND BOLTS IN PLACE.
2. ADJUST ASSEMBLY TO CORRECT VERTICAL POSITION AND INSTALLATION OPENING. TIGHTEN ONE SIDE INTO PLACE USING ANCHOR BOLTS IN GIRDERS. HAND TIGHTEN OPPOSITE SIDE.
3. TIGHTEN OPPOSITE SIDE JUST PRIOR TO DECK PLACEMENT.
4. CAST DECK.
5. CUT/REMOVE PIPE SPACER AND BOLT AS SOON AS CONCRETE WILL SUPPORT LOAD WITHOUT OVERSTRESSING OR DAMAGING CONCRETE, BUT NO LONGER THAN 8 HOURS AFTER DECK PLACEMENT.
6. REPAIR DAMAGE TO EXPOSED GALVANIZATION.

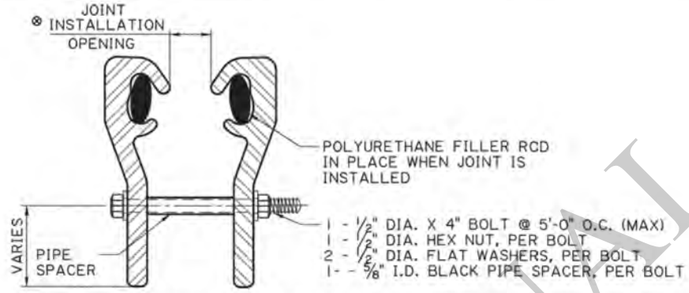

END DAM SHIPPING AND INSTALLATION ASSEMBLY

(ANCHOR ANGLES AND ANCHOR STUDS NOT SHOWN)

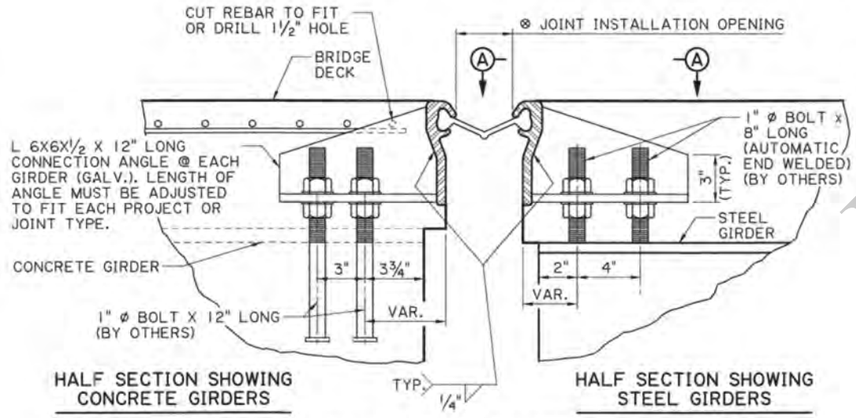

HALF SECTION SHOWING CONCRETE GIRDERS

HALF SECTION SHOWING STEEL GIRDERS

TYPICAL SECTION AT GIRDERS

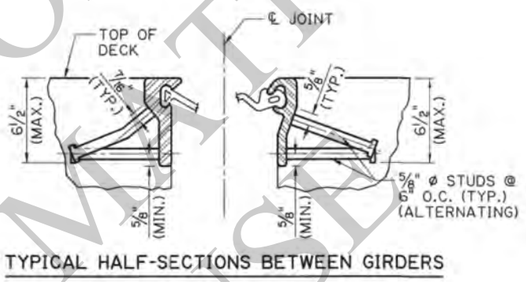

TYPICAL HALF-SECTIONS BETWEEN GIRDERS

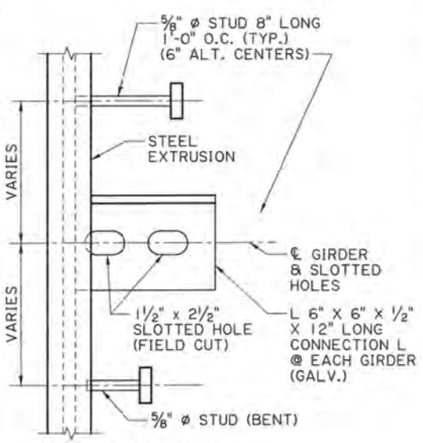

SECTION A-A

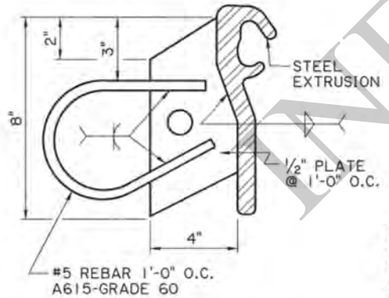

ALTERNATE SECTION BETWEEN GIRDERS

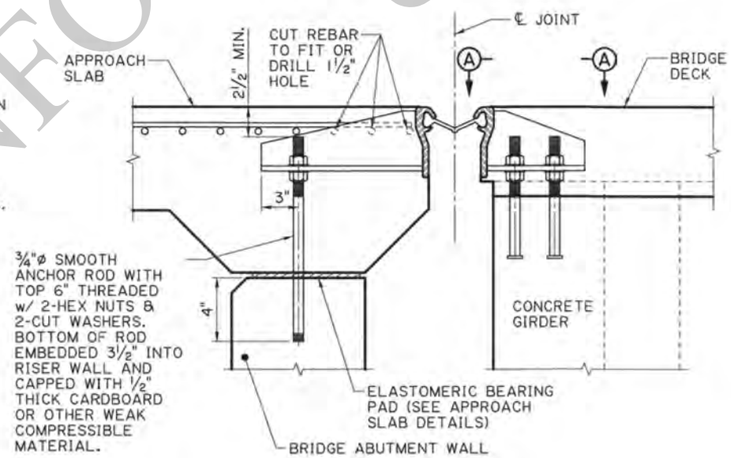

TYPICAL SECTION AT BRIDGE END (@ GIRDERS)

NOTES:

1. JOINT FABRICATION AND CONSTRUCTION SHALL BE IN ACCORDANCE WITH SECTION 815.
2. PROVIDE HOT-DIPPED GALVANIZED ANCHOR RODS AND ANCHOR BOLTS IN COMFORMANCE WITH SECTION 807.
3. THE MANUFACTURER'S RECOMMENDED CONSTRUCTION METHODS SHALL BE FOLLOWED.
4. THE NEOPRENE SEAL MANUFACTURER'S REPRESENTATIVE SHALL BE PRESENT DURING INITAL SEAL INSTALLATION(S) UNTIL SUCH TIME AS THE PROJECT ENGINEER IS SATISFIED WITH SEAL INSTALLATION. AFTER INITIAL INSTALLATION, PROVIDE SEAL MANUFACTURER'S REPRESENTATIVE AS NEEDED UPON PROJECT ENGINEER'S REQUEST.
5. SUBMIT SHOP DRAWINGS IN ACCORDANCE WITH SECTION 801.
6. SHIP END DAMS IN ACCORDANCE WITH THESE DETAILS.
7. PLACE POLYURETHANE FILLER ROD IN EXTRUSION CAVITY PRIOR TO SHIPMENT. REMOVE FILLER ROD ONLY WHEN NEOPRENE SEAL IS INSTALLED.
8. FOR WELDS, CONFORM TO SECTION 809.
9. JOINTS UP TO FIFTY-FOUR (54) FEET IN LENGTH SHALL BE DELIVERED TO THE JOB SITE IN ONE PIECE. JOINTS OVER FIFTY-FOUR (54) FEET IN LENGTH MAY HAVE PROVISIONS FOR A FIELD SPLICE IN THE END DAM EXTRUSION, PROVIDED THE SPLICE IS PERFORMED IN SHOP-LIKE CONDITIONS IN THE PRESENCE OF THE DOTD FABRICATION INSPECTOR.
10. WELDED SPLICES IN END DAM EXTRUSIONS SHALL BE SHOP SPLICES. EXTRUSION SECTIONS BETWEEN WELDED SHOP SPLICES SHALL NOT BE LESS THAN 15 FEET IN LENGTH, EXCEPT THAT ONE SECTION NO LESS THAN 4 FEET IN LENGTH WILL BE ALLOWED IN THE SHOULDER AREA IF REQUIRED TO MATCH ROADWAY CROSS SECTION. SPLICES SHALL BE OUTSIDE OF WHEEL PATHS. SEE WHEEL PATH LOCATIONS DETAIL.

    WELDED SPLICES SHALL BE BUTT WELDS. WELD MATERIAL IN THE CAVITY WILL BE CAUSE FOR REJECTION. SHOP WELDED SPLICES ARE ALSC REQUIRED WHERE TWO DIFFERENT SHAPES ARE JOINED AT THE CURB WHERE CURB UNITS ARE TURNED UP. SHOW ALL SHOP AND FIELD SPLICE LOCATIONS IN THE SHOP DRAWINGS. SPLICE LOCATIONS MAY BE DESIGNATED WITH A +/- 6 INCH TOLERANCE.
11. BEND STUDS PRIOR TO WELDING. NO BENDING OF STUDS WILL BE ALLOWED AFTER WELDING EXCEPT AS REQUIRED FOR WELDING INSPECTION.
12. REPAIR DAMAGED GALVANIZED COATS IN ACCORDANCE WITH SECTION 811.
13. NEOPRENE SEALS SHALL BE MANUFACTURED AS A CONTINUOUS PIECE WITH ONLY ONE (1) SHOP SPLICE PER JOINT ALLOWED WHEN LENGTH EXCEEDS 50 FEET. SHOW SEAL SPLICE LOCATION ON THE SHOP DRAWINGS. THE NEOPRENE SEAL SHALL CONFORM TO SECTION 1005, WITH THE HARDNESS REQUIREMENT OF ASTM D2628 REVISED TO BE 55-5/+10.

    SEAL SHALL BE BONDED TO EXTRUSION CAVITY WITH A PRE-MIXED ADHESIVE LUBRICATING SOLUTION WHICH SHALL BE USED TO FACILITATE THE SEAL INSTALLATION. THIS ADHESIVE LUBRICANT SHALL BE SELECTED FROM THE DOTD APPROVED MATERIALS LIST. THE LUBRICANT SHOULD FLOW FREELY AND EVENLY COAT THE SEAL AND JOINT FACE. THE LUBRICANT SHALL COMPLETELY COAT THE SEAL AND EXTRUSION CAVITY WHICH REMAINS IN CONTACT.
14. ⊗ SEE PROJECT PLAN JOINT DATA TABLE FOR DESIGN AND INSTALLATION REQUIREMENTS.
15. ANCHOR BOLTS IN GIRDER WILL BE PAID FOR AS PART OF THE GIRDER. ANCHOR RODS IN APPROACH SLAB SUPPORT WALL WILL BE PAID FOR UNDER THE STRUCTURAL METALWORK (ANCHOR BOLTS) PAY ITEM. MEASUREMENT AND PAYMENT OF OTHER END DAM AND SEAL ELEMENTS WILL BE IN ACCORDANCE WITH SECTION 815.
16. JOINTS WILL BE PAID FOR UNDER PAY ITEM SEALED EXPANSION JOINT (END DAMS AND PREFORMED NEOPRENE SEAL).

FOR INFORMATIONAL USE

SHEET NUMBER		
PARISH	CONTROL SECTION	STATE PROJECT
DESIGN A.LANCASTER	DETAIL A.LANCASTER	SERIES # 1 OF 2
CHECK K. KEMP	CHECK K. KEMP	REVIEW Y. SHEN

STATE OF LOUISIANA
ADAM LANCASTER
License No. 35573
PROFESSIONAL ENGINEER
IN
CIVIL ENGINEERING
5/4/2021

APPROVED BY CHIEF ENGINEER: DATE: 5/12/2021

MISC. SPAN DETAILS

SEALED EXPANSION JOINT - END DAMS AND PREFORMED NEOPRENE

STANDARD PLAN NO. JOINT-NP

DOTD
LOUISIANA DEPARTMENT OF TRANSPORTATION & DEVELOPMENT
BRIDGE AND STRUCTURAL DESIGN

IP_PWP:d0964968\BD.5.3.1.02 - Sealed Expansion Joint (Preformed Neoprene 2 of 2)_raster.dgn 5/21/2021 08:25

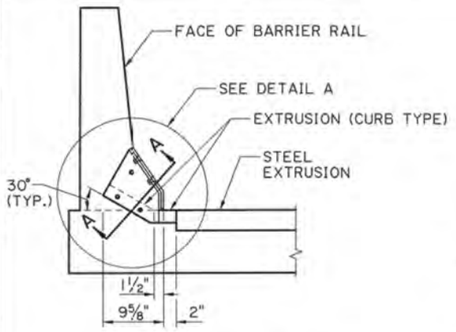

F-SHAPE BARRIER SECTION OPTION 1

(NON-SKEWED STEEL EXTRUSION AT LOW SIDE OF DECK)

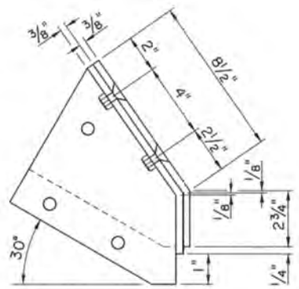

DETAIL A

(SEAL NOT SHOWN)

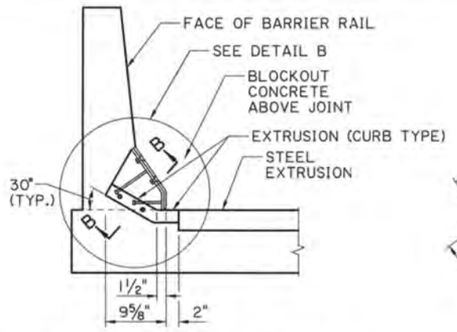

F-SHAPE BARRIER SECTION OPTION 2

(NON-SKEWED STEEL EXTRUSION AT LOW SIDE OF DECK)

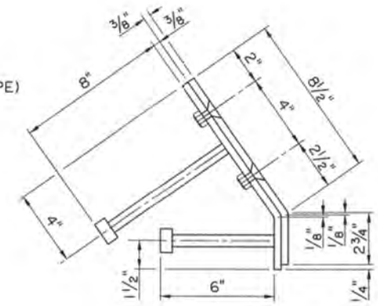

DETAIL B

(SEAL NOT SHOWN)

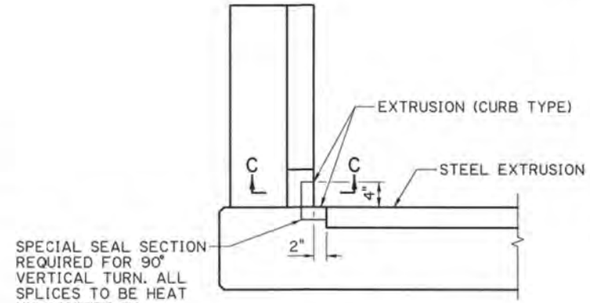

SPECIAL SEAL SECTION REQUIRED FOR 90° VERTICAL TURN. ALL SPLICES TO BE HEAT VULCANIZED IN FACTORY.

BARRIER SECTION

(QUAD BEAM SPANS @ END BENTS)
(LOW SIDE ONLY)

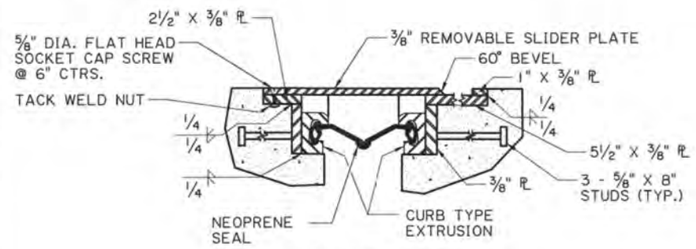

SECTION A-A

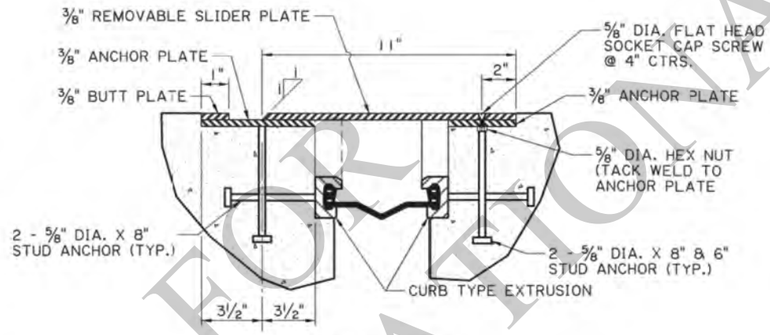

SECTION B-B

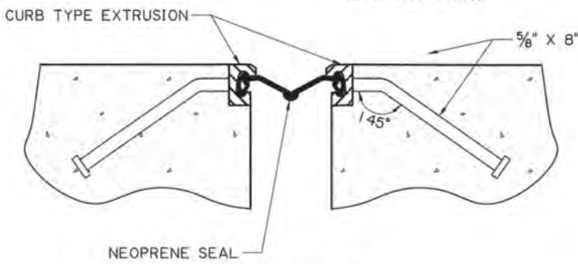

SECTION C-C

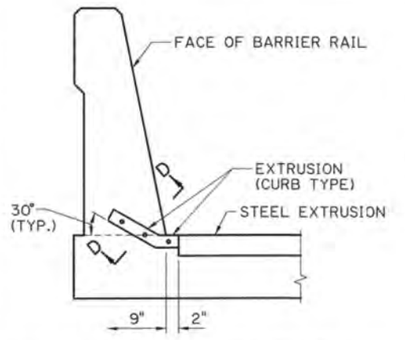

SINGLE SLOPE BARRIER SECTION

(NON-SKEWED STEEL EXTRUSION AT LOW SIDE OF DECK)

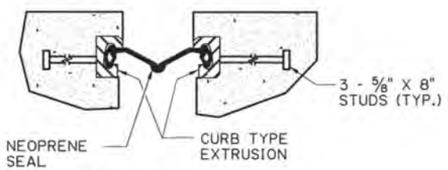

SECTION D-D

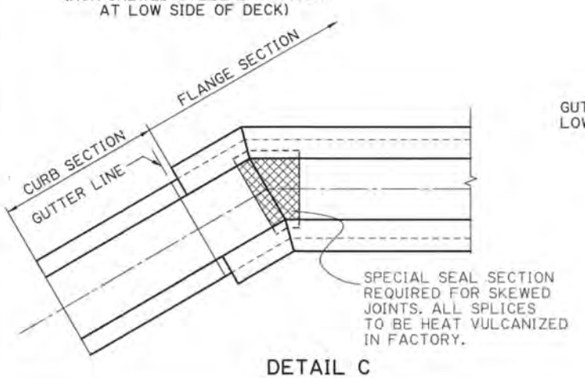

DETAIL C

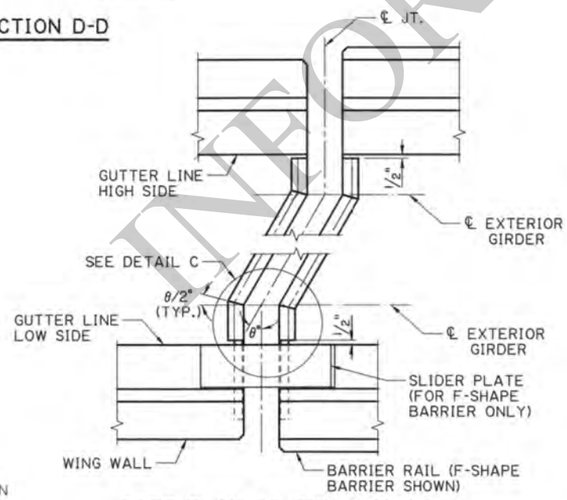

PART PLAN AT END BENTS

(SKEWED JOINT FOR GIRDER BRIDGES)

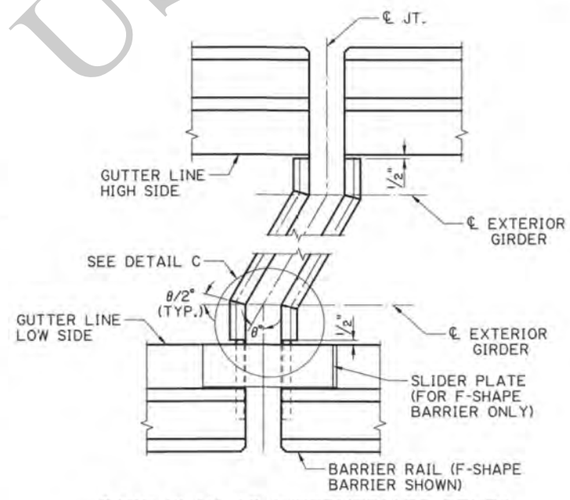

PART PLAN AT INTERMEDIATE BENTS

(SKEWED JOINT FOR GIRDER BRIDGES)

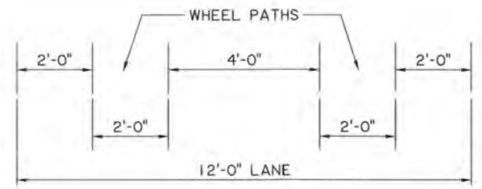

WHEEL PATH LOCATIONS

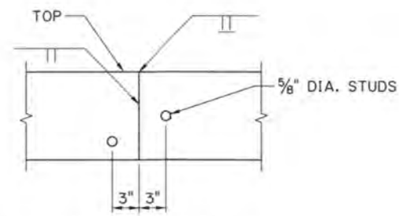

TYPICAL END DAM SPLICE

FOR INFORMATIONAL USE

SHEET NUMBER

PARISH	CONTROL SECTION	STATE PROJECT

DESIGN	A.LANCASTER
CHECK	K. KEMP
DETAIL	A.LANCASTER
CHECK	K. KEMP
REVIEW	Y. SHEN
SERIES #	2 OF 2

STATE OF LOUISIANA
ADAM LANCASTER
License No. 35573
PROFESSIONAL ENGINEER
IN
CIVIL ENGINEERING
5/4/2021

APPROVED BY CHIEF ENGINEER: DATE: 5/12/2021

STATE OF LOUISIANA
JOHN BEL EDWARDS
GOVERNOR

MISC. SPAN DETAILS

SEALED EXPANSION JOINT - END DAMS AND PREFORMED NEOPRENE

STANDARD PLAN: JOINT-NP

DOTD
LOUISIANA DEPARTMENT OF TRANSPORTATION & DEVELOPMENT

BRIDGE AND STRUCTURAL DESIGN

IP_PWP:d0964968\BD.5.3.2.01 - Sealed Expansion Joint (Preformed Silicone 1 of 2)_raster.dgn
5/21/2021 08:27

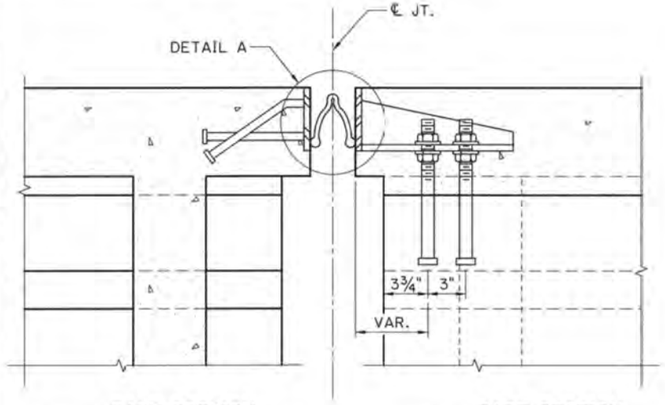

PART SECTION
BETWEEN CONCRETE GIRDERS

PART SECTION
AT ℄ OF CONCRETE GIRDER

PREFORMED SILICONE SEAL DETAIL (PPC GIRDERS)
(N.T.S.)

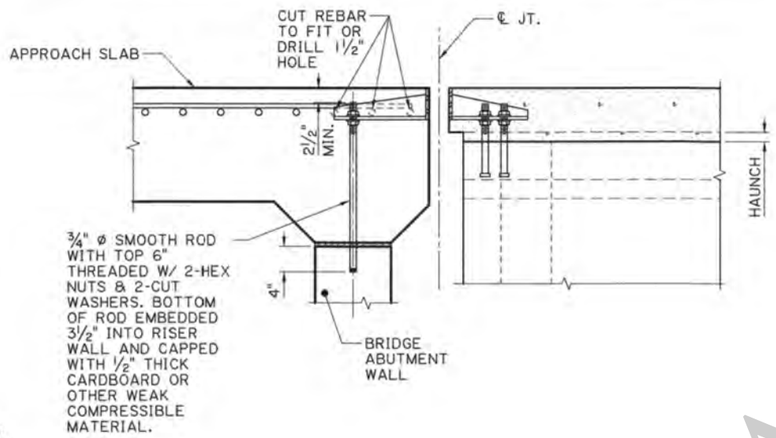

END DAM CONNECTION AT BRIDGE END (@ ℄ GIRDERS)
(N.T.S.)

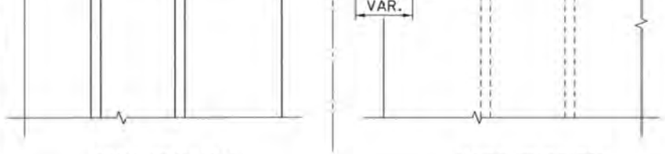

PART SECTION
BETWEEN STEEL GIRDERS

PART SECTION
AT ℄ OF STEEL GIRDER

PREFORMED SILICONE SEAL DETAIL (STEEL GIRDERS)
(N.T.S.)

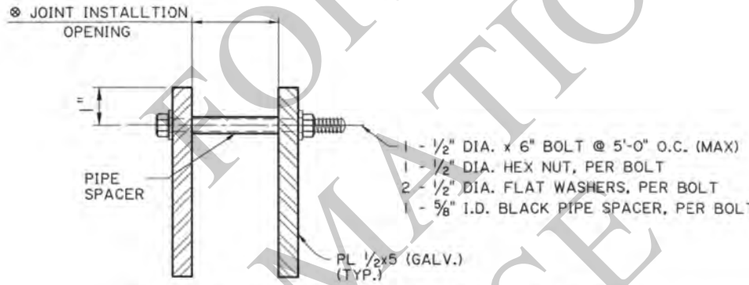

END DAM SHIPPING AND INSTALLATION ASSEMBLY
(ANCHOR ANGLES AND ANCHOR STUDS NOT SHOWN)

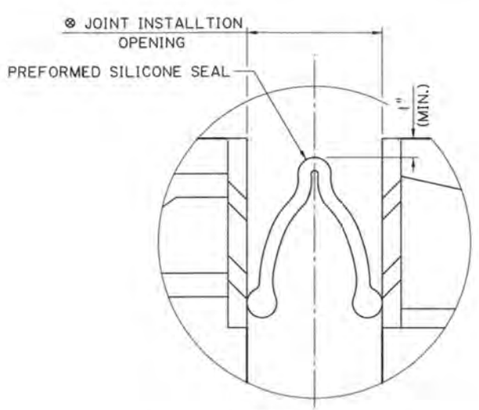

DETAIL A
(SILICONE SEAL INSTALLATION RECESS)

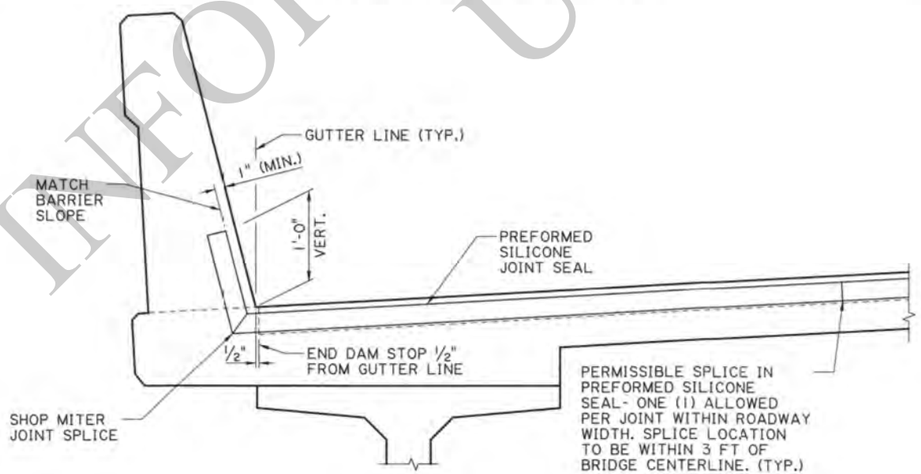

36" SINGLE SLOPE BARRIER

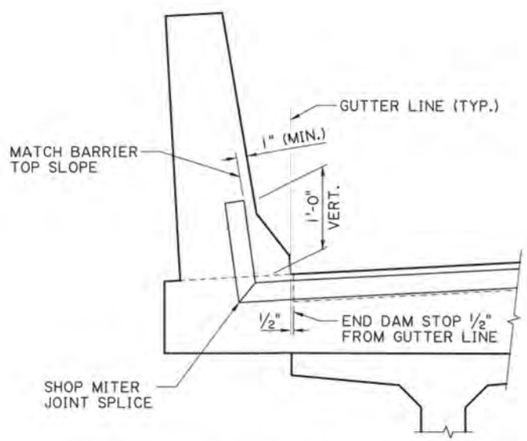

F-SHAPE BARRIER

SILICONE SEAL AT GUTTER LINES
(HIGH SIDE AND LOW SIDE)

NOTES:

1. JOINT FABRICATION AND CONSTRUCTION SHALL BE IN ACCORDANCE WITH SECTION 815.
2. PROVIDE HOT-DIPPED GALVANIZED ANCHOR RODS AND ANCHOR BOLTS IN COMFORMANCE WITH SECTION 807.
3. THE MANUFACTURER'S RECOMMENDED CONSTRUCTION METHODS SHALL BE FOLLOWED.
4. THE SILICONE SEAL MANUFACTURER'S REPRESENTATIVE SHALL BE PRESENT DURING INITAL SEAL INSTALLATION(S) UNTIL SUCH TIME AS THE PROJECT ENGINEER IS SATISFIED WITH SEAL INSTALLATION. AFTER INITIAL INSTALLATION, PROVIDE SEAL MANUFACTURER'S REPRESENTATIVE AS NEEDED UPON PROJECT ENGINEER'S REQUEST.
5. SUBMIT SHOP DRAWINGS IN ACCORDANCE WITH SECTION 801.
6. SHIP END DAMS IN ACCORDANCE WITH THESE DETAILS.
7. FOR WELDS, CONFORM TO SECTION 809.
8. JOINTS UP TO FIFTY-FOUR (54) FEET IN LENGTH SHALL BE DELIVERED TO THE JOB SITE IN ONE PIECE. JOINTS OVER FIFTY-FOUR (54) FEET IN LENGTH MAY HAVE PROVISIONS FOR A FIELD SPLICE IN THE END DAM, PROVIDED THE SPLICE IS PERFORMED IN SHOP-LIKE CONDITIONS IN THE PRESENCE OF THE DOTD FABRICATION INSPECTOR.
9. WELDED SPLICES IN END DAMS SHALL BE SHOP SPLICES. END DAM SECTIONS BETWEEN WELDED SHOP SPLICES SHALL NOT BE LESS THAN 15 FEET IN LENGTH, EXCEPT THAT ONE SECTION NO LESS THAN 4 FEET IN LENGTH WILL BE ALLOWED IN THE SHOULDER AREA IF REQUIRED TO MATCH ROADWAY CROSS SECTION. SPLICES SHALL BE OUTSIDE OF WHEEL PATHS. SEE WHEEL PATH LOCATIONS DETAIL.

   WELDED SPLICES SHALL BE BUTT WELDS. SHOW ALL SHOP AND FIELD SPLICE LOCATIONS IN THE SHOP DRAWINGS. SPLICE LOCATIONS MAY BE DESIGNATED WITH A +/- 6 INCH TOLERANCE.
10. BEND STUDS PRIOR TO WELDING. NO BENDING OF STUDS WILL BE ALLOWED AFTER WELDING EXCEPT AS REQUIRED FOR WELDING INSPECTION.
11. REPAIR DAMAGED GALVANIZED COATS IN ACCORDANCE WITH SECTION 811.
12. THE SILICONE SEAL AND LOCKING ADHESIVE SHALL CONFORM TO SECTION 1005.
13. ⊗ SEE PROJECT PLAN JOINT DATA TABLE FOR DESIGN AND INSTALLATION REQUIREMENTS.
14. ANCHOR BOLTS IN GIRDER WILL BE PAID FOR AS PART OF THE GIRDER. ANCHOR RODS IN APPROACH SLAB SUPPORT WALL WILL BE PAID FOR UNDER THE STRUCTURAL METALWORK (ANCHOR BOLTS) PAY ITEM. MEASUREMENT AND PAYMENT OF OTHER END DAM AND SILICONE SEAL ELEMENTS WILL BE IN ACCORDANCE WITH SECTION 815.
15. JOINTS SHALL BE PAID FOR UNDER PAY ITEM SEALED EXPANSION JOINT (END DAMS AND PREFORMED SILICONE SEAL).

INFORMATIONAL USE

SHEET NUMBER

PARISH	CONTROL SECTION	STATE PROJECT

DESIGN	A.LANCASTER
CHECK	K. KEMP
DETAIL	A.LANCASTER
CHECK	K. KEMP
REVIEW	Y. SHEN
SERIES #	1 OF 2

STATE OF LOUISIANA
ADAM LANCASTER
License No. 35573
PROFESSIONAL ENGINEER
IN
CIVIL ENGINEERING
5/11/2021

APPROVED BY CHIEF ENGINEER: Christopher P. Knotts DATE: 5/12/2021

MISC. SPAN DETAILS
SEALED EXPANSION JOINT - END DAMS AND PREFORMED SILICONE
STANDARD PLAN: JOINT-SC

DOTD
LOUISIANA DEPARTMENT OF TRANSPORTATION & DEVELOPMENT
BRIDGE AND STRUCTURAL DESIGN

IP_PWP:d0964968\BD.5.3.2.02 - Sealed Expansion Joint (Preformed Silicone 2 of 2)_raster.dgn 5/21/2021 08:28

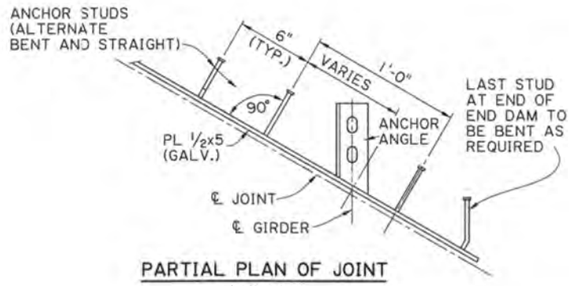

PARTIAL PLAN OF JOINT
(N.T.S.)
(SHOWING TYPICAL END DAM FOR SKEWED JOINT)

PARTIAL PLAN OF JOINT
(N.T.S.)

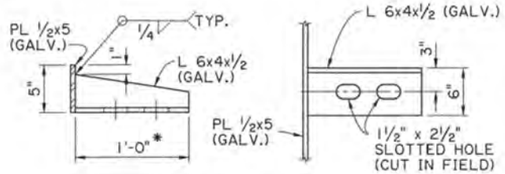

ANCHOR ANGLE
(N.T.S.)

* FOR APPROACH SLAB END DAMS IN A 6" SACRIFICIAL SECTION, USE L 6x4x½ x 1'-3"

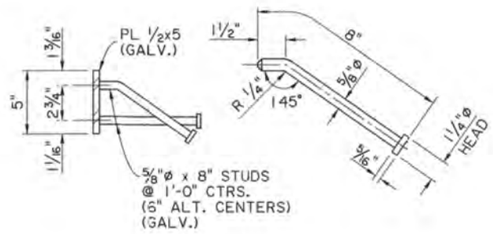

ANCHOR STUD
(N.T.S.)

ANCHOR STUDS SHALL BE ⅝" ø x 8" AUTOMATIC END WELDED TYPE. ALL BENDS ARE TO BE MADE PRIOR TO WELDING AND GALVANIZING.

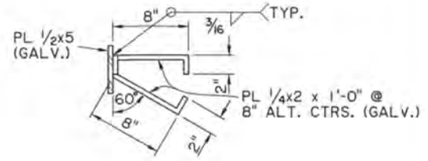

ANCHOR STRAP ALTERNATE
(N.T.S.)

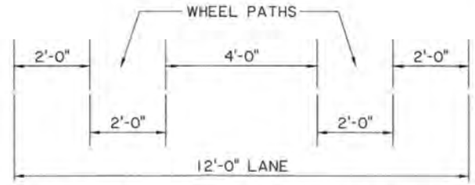

DIMENSIONS SHOWN ARE NORMAL TO DIRECTION OF TRAFFIC.

WHEEL PATH LOCATIONS

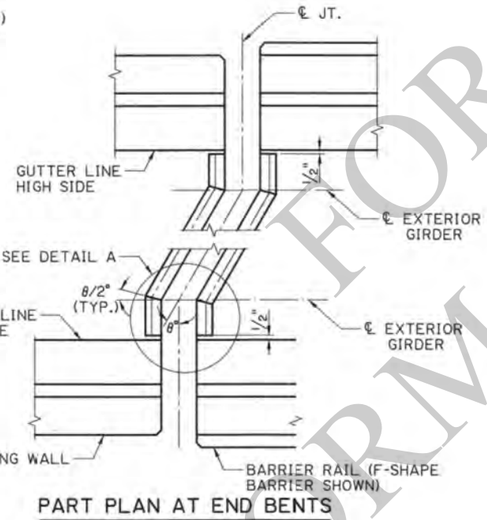

PART PLAN AT END BENTS
(SKEWED JOINT FOR GIRDER BRIDGES)

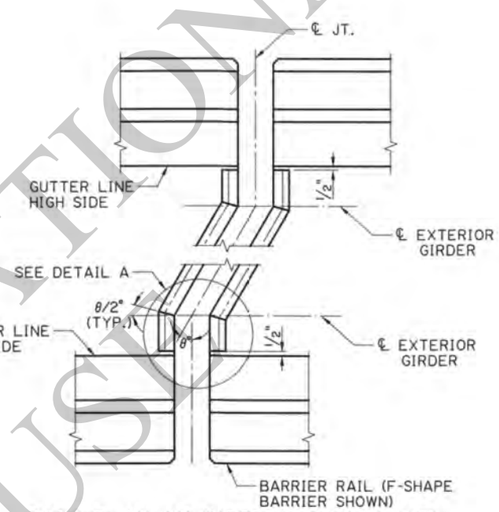

PART PLAN AT INTERMEDIATE BENTS
(SKEWED JOINT FOR GIRDER BRIDGES)

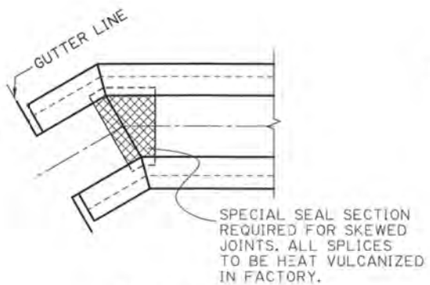

DETAIL A

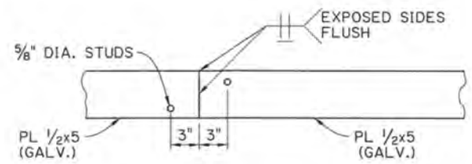

PERMISSIBLE END DAM SPLICE

PL ½x5 TO HAVE A UNIVERSAL MILL FACE FINISH ON TOP, OR TOP EDGE IS TO BE FINISHED SMOOTH IF CUT TO MATCH CROWN OF ROADWAY.
(N.T.S.)

END DAM INSTALLATION PROCEDURE:

1. ONE END DAM STABILIZER (SEE END DAM STABILIZER DETAIL) IS REQUIRED IN EACH END DIAPHRAGM, EQUALLY SPACED BETWEEN GIRDERS, ON ONE SIDE OF THE JOINT ONLY. FOR CONCRETE GIRDER BRIDGE, CAST NO. 5 BARS "B" IN END DIAPHRAGM CONCRETE. FOR STEEL GIRDER BRIDGE, TACK WELD NO. 5 BARS "B" TO TOP MEMBER OF CROSS DIAPHRAGMS.
2. PLACE END DAM ASSEMBLY AS A UNIT, WITH PIPE SPACERS AND BOLTS IN PLACE.
3. ADJUST ASSEMBLY TO CORRECT VERTICAL POSITION AND JOINT INSTALLATION OPENING. TIGHTEN ONE SIDE INTO PLACE USING ANCHOR BOLTS IN GIRDERS. HAND TIGHTEN OPPOSITE SIDE.
4. LOOSELY TIE NO. 5 BARS "A" TO NO. 5 BARS "B" (END DAM STABILIZER).
5. TACK WELD NO. 5 BARS "A" TO END DAM PLATE.
6. WELD NO. 5 BARS "A" TO NO. 5 BARS "B".
7. TIGHTEN OPPOSITE SIDE OF END DAM ASSEMBLY ANCHORS JUST PRIOR TO DECK POUR.
8. CAST DECK.
9. CUT/REMOVE PIPE SPACER AND BOLT AS SOON AS CONCRETE WILL SUPPORT LOAD WITHOUT OVERSTRESSING OR DAMAGING CONCRETE, BUT NO LONGER THAN 8 HOURS AFTER DECK POUR.
10. REPAIR ANY DAMAGE TO EXPOSED GALVANIZATION.

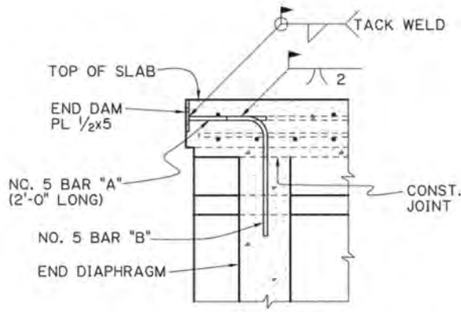

END DAM STABILIZER
(PARTIAL SECTION BETWEEN PPC GIRDERS)
(N.T.S.)

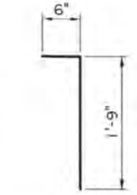

NO. 5 BAR "B"
(2½" ø PIN)

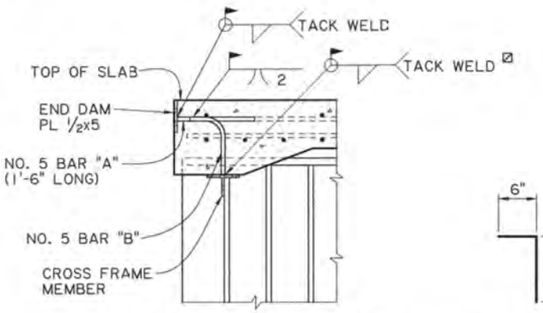

END DAM STABILIZER
(PARTIAL SECTION BETWEEN STEEL GIRDERS)
(N.T.S.)

☑ FOR WELDING BAR "B" TO CROSS FRAME MEMBER, REMOVE CROSS FRAME MEMBER PROTECTIVE COATING SUFFICIENTLY TO PERMIT WELDING. DO NOT REMOVE COATING WITHIN 2 INCHES OF EDGE OF CROSS FRAME MEMBER FLANGE.

NO. 5 BAR "B"
(2½" ø PIN)

FOR INFORMATIONAL USE

SHEET NUMBER

PARISH	CONTROL SECTION	STATE PROJECT

DESIGN	A.LANCASTER	DETAIL	A.LANCASTER	REVIEW	Y. SHEN	SERIES # 2 OF 2
CHECK	K. KEMP	CHECK	K. KEMP			

STATE OF LOUISIANA
ADAM LANCASTER
License No. 35573
PROFESSIONAL ENGINEER
IN
CIVIL ENGINEERING
5/4/2021

APPROVED BY CHIEF ENGINEER: 5/12/2021 DATE:

MISC. SPAN DETAILS

SEALED EXPANSION JOINT - END DAMS AND PREFORMED SILICONE

JOINT-SC

STANDARD PLAN NO.

DOTD
LOUISIANA DEPARTMENT OF TRANSPORTATION & DEVELOPMENT
BRIDGE AND STRUCTURAL DESIGN

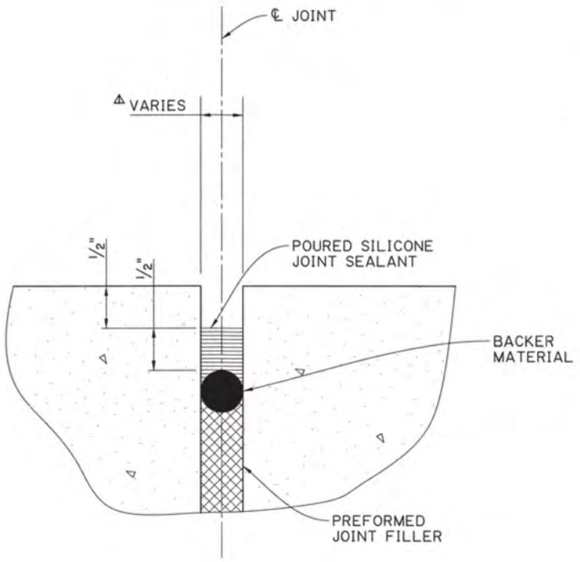

POURED SILICONE JOINT - SECTION
(N.T.S.)

NOTES:

1. JOINT FABRICATION AND CONSTRUCTION SHALL BE IN ACCORDANCE WITH SECTION 815.
2. THE MANUFACTURER'S RECOMMENDED CONSTRUCTION METHODS SHALL BE FOLLOWED.
3. PREFORMED JOINT FILLER SHALL CONFORM TO SECTION 1005.
4. POURED SILICONE JOINT SEALANT AND BACKER MATERIAL SHALL CONFORM TO SECTION 1005. THE BACKER MATERIAL SHALL BE COMPRESSED TO 80% OR LESS OF ITS ORIGINAL DIAMETER FOR INSTALLATION.
5. SEE THE JOINT DATA TABLE IN PLANS FOR DESIGN AND INSTALLATION REQUIREMENTS.
6. JOINT WILL BE PAID FOR UNDER PAY ITEM JOINT SEAL (POURED).

FOR INFORMATIONAL USE

SHEET NUMBER

PARISH	CONTROL SECTION	STATE PROJECT

DESIGN	A.LANCASTER
CHECK	K. KEMP
DETAIL	J. W. P.
CHECK	K. KEMP
REVIEW	Y. SHEN
SERIES #	1 OF 1

STATE OF LOUISIANA
ADAM LANCASTER
License No. 35573
PROFESSIONAL ENGINEER
IN
CIVIL ENGINEERING
Adam Lancaster
5/4/2021

APPROVED BY CHIEF ENGINEER:
DATE: 5/12/2021

MISC. SPAN DETAILS

POURED SILICONE JOINT

STANDARD PLAN: JOINT-SC-P

DOTD
LOUISIANA DEPARTMENT OF TRANSPORTATION & DEVELOPMENT

BRIDGE AND STRUCTURAL DESIGN

5/21/2021 08:30

IP_PWP:d0964968\BD.5.3.3.01 - Poured Silicone Seal_raster.dgn

GENERAL NOTES:

1) THIS STRUCTURE MEETS ALL DOTD HYDRAULIC PERFORMANCE CRITERIA WHEN USED IN ACCORDANCE WITH THE DOTD HYDRAULICS MANUAL AND ALL DOTD HYDRAULIC DESIGN POLICIES.

2) PROVIDE PRECAST UNITS AS THE LOWER PORTION OF A COMPOSITE STRUCTURE. PROVIDE CAST-IN-PLACE CONCRETE (SEE APPROPRIATE STANDARD PLAN FOR REQUIRED REINFORCING AND DIMENSIONS) FOR THE TOP 1'-6" OF THE STRUCTURE AS FOLLOWS:
   A) CB-01, CB-02, CB-04, CB-05, AND MANHOLES MAY BE FULLY PRECAST IF THE STRUCTURES ARE NOT EXPOSED TO TRAFFIC LOADS; ELEVATIONS MUST BE FIELD VERIFIED PRIOR TO FABRICATION.
   B) CB-06, CB-07, CB-08, AND CB-09 STRUCTURES MUST HAVE THE TOP 18" CAST-IN-PLACE; ELEVATIONS MUST BE FIELD VERIFIED PRIOR TO FABRICATION.

3) DESIGN IS TO BE IN ACCORDANCE WITH THE AASHTO LRFD BRIDGE DESIGN SPECIFICATIONS, EIGHTH EDITION, 2017, AND THE LATEST LOUISIANA STANDARD SPECIFICATIONS FOR ROADS AND BRIDGES.

4) FINISH CAST-IN-PLACE CONCRETE IN ACCORDANCE WITH OTHER STANDARD PLANS AND 805.

5) FORM PIPE OPENINGS ONLY AS REQUIRED FOR INTERSECTING PIPES. PROVIDE OPENING DIMENSIONS TO ACCOMMODATE PIPE DIAMETER AND SKEW ANGLE. PROVIDE OPENING DIMENSION THAT IS 4± 1/2 INCH LARGER THAN OUTSIDE PIPE DIMENSION.

6) RESILIENT CONNECTORS OR CONCRETE COLLARS ARE REQUIRED FOR CONNECTIONS OF ALL PIPE SIZES (EXCEPT YARD DRAIN PIPE AND UNDERDRAINS) WITH COST TO BE INCLUDED IN THE COST OF THE PRECAST STRUCTURE.

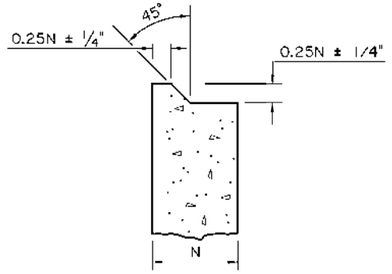

JOINT DETAIL A
PRECAST/PRECAST

1. SEAL AND WRAP JOINT IN ACCORDANCE WITH 702.3.020

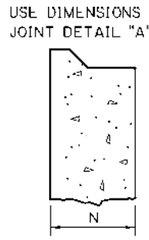

JOINT DETAIL B - OPTION 1
CAST-IN-PLACE/PRECAST

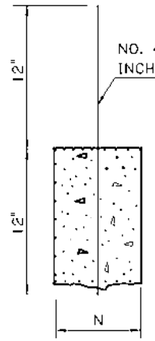

JOINT DETAIL B - OPTION 2
CAST-IN-PLACE/PRECAST

IN OPTIONS 1 AND 2, COAT PRECAST CONCRETE JOINT SURFACE AND A MAXIMUM OF 2 INCHES OF REINFORCING STEEL WITH TYPE V, GRADE 2 OR GRADE 3 EPOXY RESIN CONFORMING TO 1017. APPLY EPOXY RESIN AND PLACE CONCRETE IN ACCORDANCE WITH MANUFACTURER'S RECOMMENDATIONS.

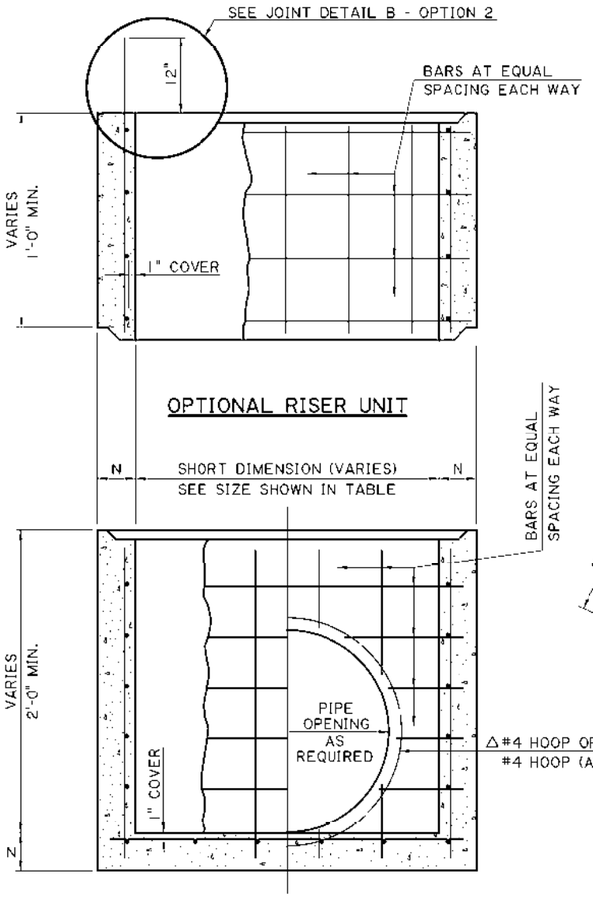

BASE UNIT
SECTION B-B

△ #4 HOOP MAY BE USED WHEN PIPE IS CIRCULAR AND CONNECTS TO THE CATCH BASIN AT +/- 90 (DEGREE) ANGLE. #4 HOOP (ALT.) SHALL BE USED FOR NON-CIRCULAR (ELLIPTICAL) PIPES AND ALL PIPES THAT ENTER THE CATCH BASIN AT A SKEWED ANGLE.

PRECAST UNITS FOR CATCH BASINS & MANHOLES

MAXIMUM HEIGHT	N	4' MAX. DIMENSION			6' MAX. DIMENSION			8' MAX. DIMENSION			10' MAX. DIMENSION		
		⊙TYPICAL SIZES 3'X3', 4'X4'			⊙TYPICAL SIZES 6'X4', 6'X6'			⊙TYPICAL SIZES 8'X4', 8'X6', 8'X8'			⊙TYPICAL SIZES 10'X4', 10'X6', 10'X8', 10'X10'		
FT.	IN.	BAR SIZE	SPAC.* IN.	As⊠ IN²/FT.	BAR SIZE	SPAC.* IN.	As⊠ IN²/FT.	BAR SIZE	SPAC.* IN.	As⊠ IN²/FT.	BAR SIZE	SPAC.* IN.	As⊠ IN²/FT.
8	4	4	6	0.40									
8	6	4	9	0.27	4	8	0.30	4	5.5	0.44	5	5.5	0.68
14	6	4	9	0.27	4	6	0.40	5	5	0.74	5	3.25	1.14
20	6	4	7	0.34	4	4.5	0.53						

⊙ OTHER SIZES ARE ACCEPTABLE AS LONG AS THE DIMENSIONS DO NOT EXCEED THE MAXIMUM DIMENSIONS.
* BAR SPACING APPLIES TO BOTH DIRECTIONS AND AT ALL LOCATIONS.
⊠ BAR SIZES AND SPACING MAY DIFFER FROM VALUES SHOWN, BUT THE AREA OF STEEL (A_s) SHALL BE EQUAL TO OR GREATER THAN VALUE SHOWN, AND BAR SPACING SHALL NOT EXCEED 1.5 TIMES THE WALL THICKNESS. THE AREA OF STEEL (A_s) MAY BE PROVIDED WITH STEEL DEFORMED WELDED WIRE FABRIC.

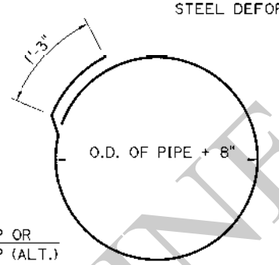

△#4 HOOP

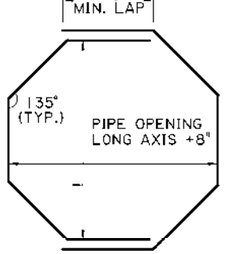

△#4 HOOP (ALT.)

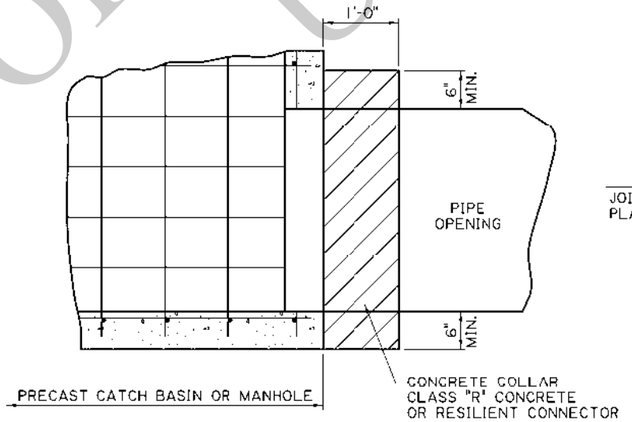

PIPE CONNECTION DETAIL

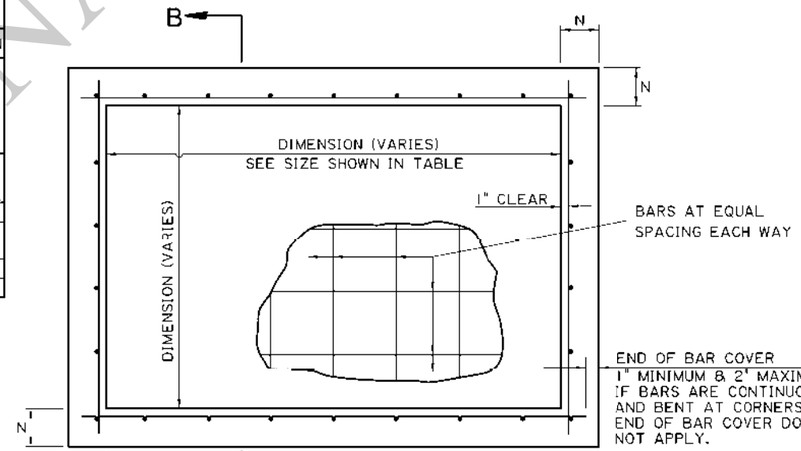

PLAN

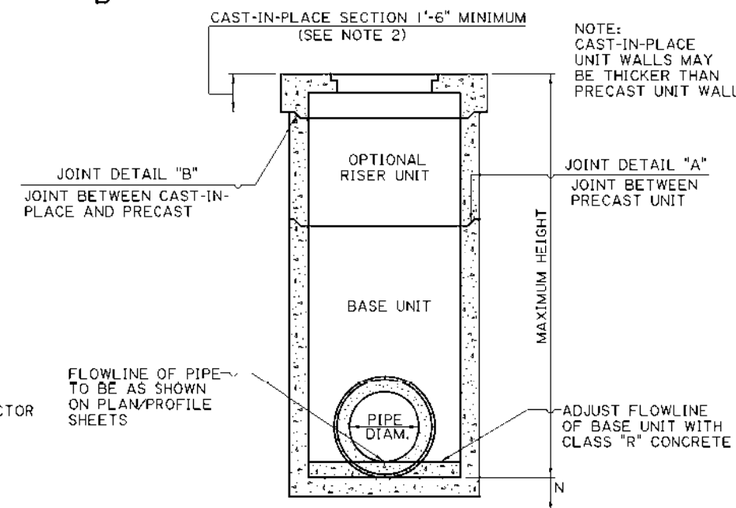

ELEVATION
TYPICAL COMPOSITE STRUCTURE

FOR INFORMATIONAL USE

SHEET NUMBER
DESIGN CHECK
DETAIL CHECK
REVIEW CHECK
SHEET # 1 OF 1
APPROVED BY CHIEF ENGINEER
DATE: 10/14/2025
REVISION OR CHANGE ORDER DESCRIPTION
BY
DATE
NO.
STATE OF LOUISIANA
PRECAST CATCH BASINS AND MANHOLES
PC-01
DOTD
LOUISIANA DEPARTMENT OF TRANSPORTATION & DEVELOPMENT
STANDARD PLAN

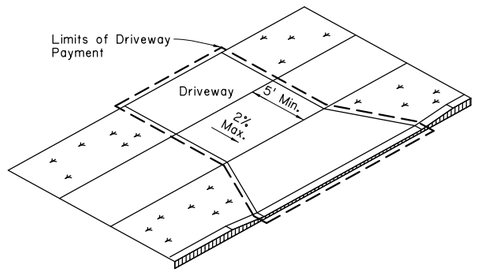

SETBACK SIDEWALK

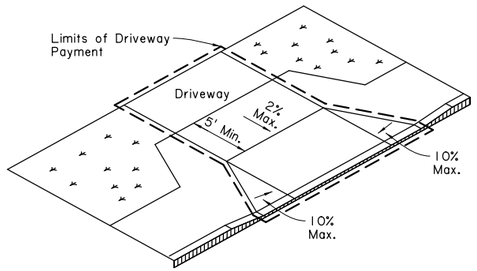

APRON OFFSET SIDEWALK

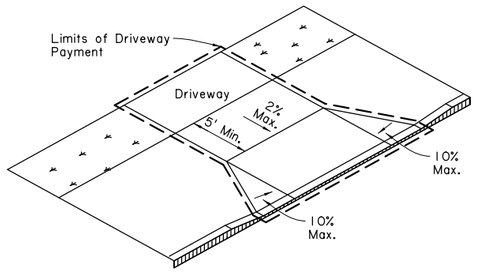

WIDE SIDEWALK

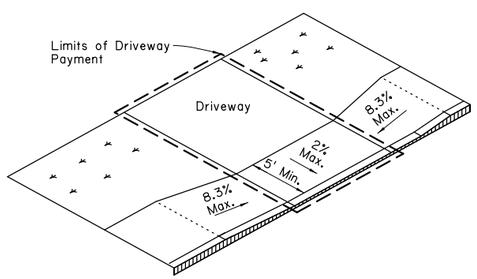

RAMP SIDEWALK

SIDEWALK TREATMENT AT DRIVEWAYS

Refer to Driveway Standard Plans for further details.

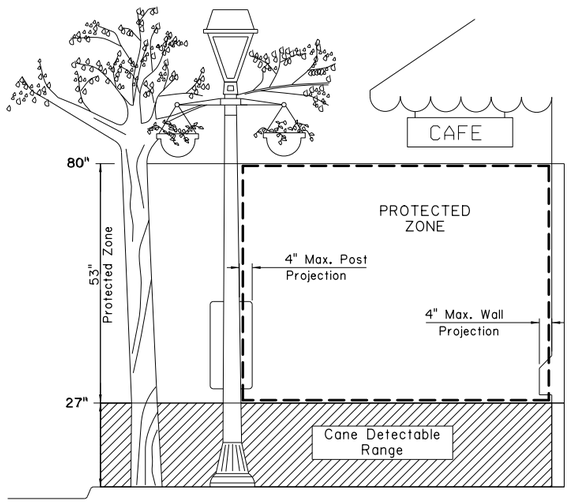

PROTECTED ZONE

Notes:

1. In pedestrian circulation area, maximum 4" projection for post or wall mounted objects between 27" and 80" above the surface.
2. When an obstruction of a height greater than 27" from the surface would create a protrusion of more than 4" into the pedestrian circulation area, construct additional curb or foundation at the bottom to provide a maximum 4" overhang.
3. Protruding objects of a height less than 27" are detectable by cane and do not require additional treatment.

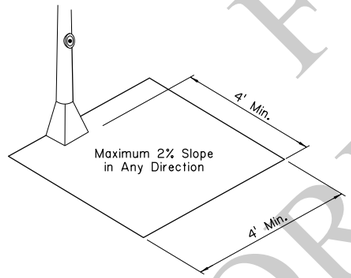

CLEAR GROUND SPACE ADJACENT TO PEDESTRIAN PUSH BUTTON

Minimum 4' x 4' clear space required at public use fixtures.

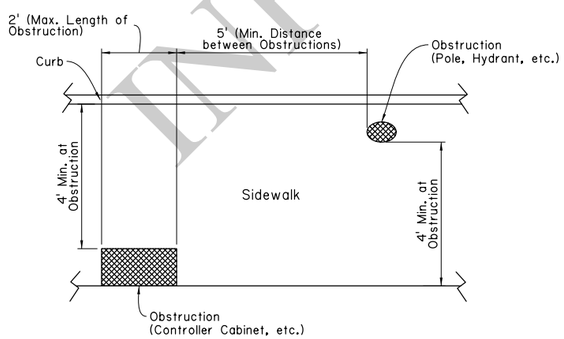

PLAN VIEW
PLACEMENT OF OBSTRUCTIONS

Items not intended for public use.

PEDESTRIAN FACILITIES GENERAL NOTES

Curb Ramps

1. Maximum allowable cross slope of curb ramp surfaces is 2%; desired cross slope is 1.5%.
2. Theoretical pay areas for curb ramps are as shown on sheet 2, unless otherwise noted in the plans. These areas may be field adjusted as approved by the Project Engineer.
3. Grade breaks at the top and bottom of curb ramps runs shall be perpendicular to the direction of the ramp run.
4. Where curb ramps are located adjacent to a walking surface, a flare must be provided; otherwise a curb may be provided. For an example, refer to curb ramp Type 2 on sheet 2.
5. The landing dimensions are 5'x5' with a maximum 2% slope in any direction. The landing clear width shall be at least as wide as the widest ramp run leading to the landing.
6. Small raised channelization islands, which cannot provide a minimum of 5'x5' landing at the top of ramps, shall be cut through level with the surface of the street.
7. Raised medians should be 6' wide in the direction of pedestrian travel to serve as a pedestrian refuge area. Medians with pedestrian access routes through them shall be designed in accordance with Draft PROWAG.
8. Maneuvering space at the bottom of curb ramps shall be a minimum of 4'x4' completely contained within the crosswalk and completely outside the parallel vehicle travel lane.
9. It is desirable to provide a no-parking zone 50' from crosswalks on each intersection approach or provide a curb extension.
10. Drainage structures should be located on the upstream side of the ramp and located to prevent ponding near the curb ramp. Drainage structures should be placed outside the crosswalk.
11. Slopes of adjoining gutters and roadway surfaces immediately adjacent to the curb ramp shall not exceed 5%. Refer to the Transition from the Curb Ramp to Roadway Detail on sheet 1.
12. Curb ramps should be aligned with the direction of pedestrian travel on the crosswalk or theoretical crosswalk. Refer to sheet 3 for typical crossing layouts and refer to the pavement marking standards for crosswalk markings.
13. Crosswalk markings shall be placed a distance of 24" from the flare on each side of a diagonal curb ramp. Refer to sheet 3 for an example.
14. Curb ramps shall include detectable warning surfaces. Refer to sheet 4 for details of detectable warning surfaces.
15. Where a curb ramp is constructed within existing curb, curb and gutter and/or sidewalk, the existing curb or curb and gutter shall be removed to the nearest joint beyond the curb transition or the extent that no remaining section of curb or curb and gutter is less than 5' long or as directed by the Project Engineer. Existing sidewalks shall be removed to the nearest joint beyond the flare slope or to the extent that no remaining section of sidewalk is less than 5' long or as directed by the Project Engineer.

Sidewalks

1. Where a 5' sidewalk cannot be provided due to site constraints, 5'x5' passing areas at intervals not to exceed 200' are required.
2. Where sidewalks and crosswalks are contained within street or highway right-of-way, the grade of the sidewalk or crosswalk shall not exceed the grade of the adjacent street or highway. Where sidewalks are not contained within a street or highway right-of-way, the grade of the sidewalk shall be 5% maximum.
3. Maximum allowable cross slope of sidewalk surfaces is 2%; desired cross slope is 1.5%.
4. Vertical surface discontinuities along a sidewalk shall be 1/2" maximum. Discontinuities between 1/4" and 1/2" shall be beveled at a 1:2 maximum slope.
5. Where sidewalks intersect with streets, detectable warning surfaces are required. Refer to sheet 4 for details of detectable warning surfaces.
6. Traffic signal or illumination poles, ground boxes, controller boxes, signs, drainage facilities and other items shall be placed so as not to obstruct the accessible route.
7. When a sidewalk crosses a driveway and exceeds the 2% maximum cross slope, the driveway or driveway portion shall be reconstructed to meet the 2% maximum cross slope requirement. Refer to driveway standard plans for driveway details.
8. Handrails are not required on sidewalks within highway right-of-way, unless site specific conditions, such as a vertical drop-off, dictate. Where handrails are provided, they must comply with ADAAG 505.
9. To prevent tracking of gravel onto the sidewalk, gravel driveways should be paved from the roadway edge to a point 10' behind the sidewalk or the right-of-way, whichever is less.

ADA - Americans with Disabilities Act
ADAAG - Americans with Disabilities Act Accessibility Guidelines
Draft PROWAG - Draft Public Rights-of-Way Accessibility Guidelines

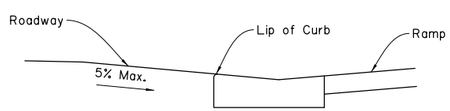

TRANSITION FROM CURB RAMP TO ROADWAY

FOR INFORMATIONAL USE

SHEET NUMBER

PARISH	CONTROL SECTION	STATE PROJECT

DESIGN MAL | DETAIL MAL | REVIEW | SERIES # 1 OF 5
CHECK BPW | CHECK BPW

APPROVED BY CHIEF ENGINEER:

DATE: 6/1/2026

NO.	DATE	REVISION OR CHANGE ORDER DESCRIPTION	BY

STATE OF LOUISIANA

DEPARTMENT OF TRANSPORTATION AND DEVELOPMENT

PEDESTRIAN FACILITIES
GENERAL NOTES AND MISC. DETAILS

PED-01

DOTD
LOUISIANA DEPARTMENT OF TRANSPORTATION & DEVELOPMENT

STANDARD PLAN

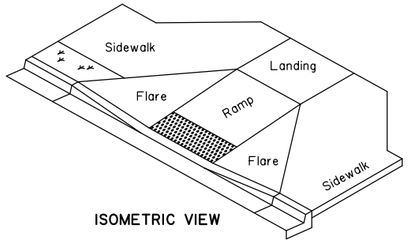

ISOMETRIC VIEW

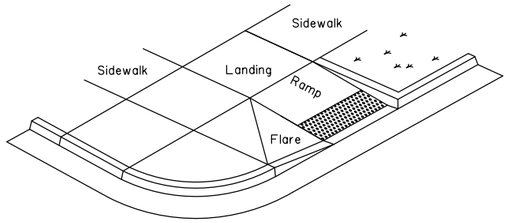

ISOMETRIC VIEW

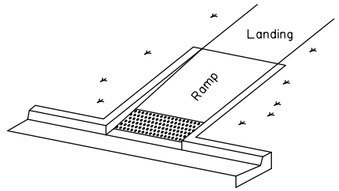

ISOMETRIC VIEW

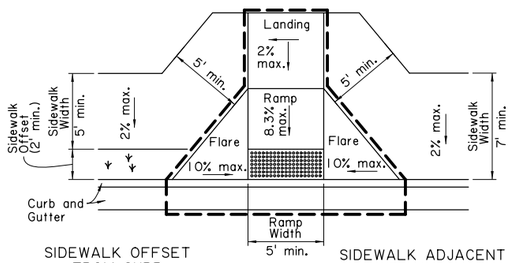

SIDEWALK OFFSET FROM CURB

SIDEWALK ADJACENT TO CURB

PLAN VIEW

TYPE 1

THEORETICAL PAY AREA = 12.8 SQ. YDS.

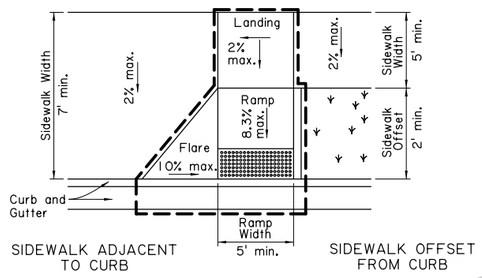

SIDEWALK ADJACENT TO CURB

SIDEWALK OFFSET FROM CURB

PLAN VIEW

TYPE 2

THEORETICAL PAY AREA = 10.4 SQ. YDS.

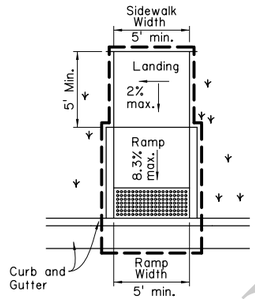

PLAN VIEW

TYPE 3

THEORETICAL PAY AREA = 8.1 SQ. YDS.

LEGEND OF PATTERNS

- Denotes Non-Walking Surface Not Part of Pedestrian Path
- Detectable Warning Surface
- Limits of Payment
- Slope

All slopes shown are maximum allowable. The least possible slope that will drain properly should be used.

Curb ramps shall be placed and designed where ponding does not occur at the bottom or on the curb ramp.

PERPENDICULAR CURB RAMPS

If a level landing of at least 3' cannot be provided, a perpendicular curb ramp should not be used.

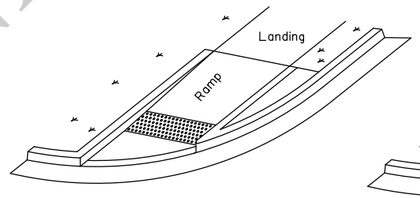

ISOMETRIC VIEW

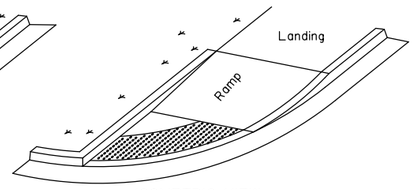

ISOMETRIC VIEW

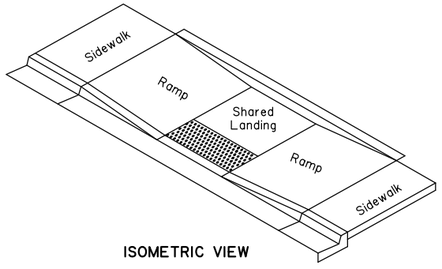

ISOMETRIC VIEW

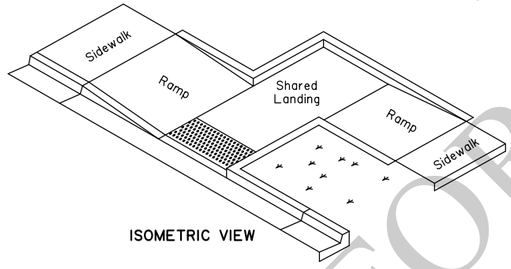

ISOMETRIC VIEW

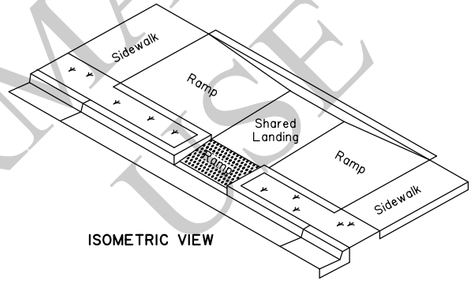

ISOMETRIC VIEW

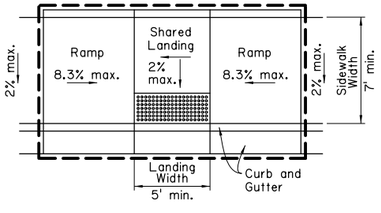

PLAN VIEW

TYPE 4

THEORETICAL PAY AREA = 17.9 SQ. YDS.

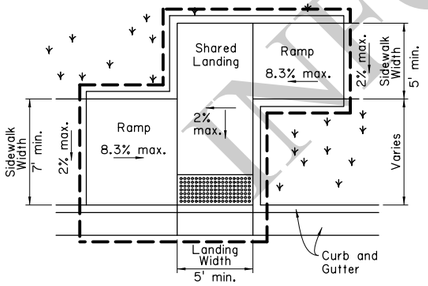

PLAN VIEW

TYPE 5

THEORETICAL PAY AREA = 19.1 SQ. YDS.

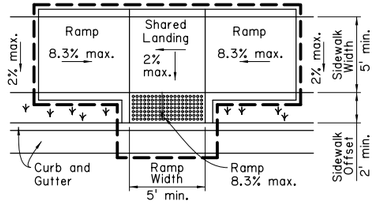

PLAN VIEW

TYPE 6

THEORETICAL PAY AREA = 13.7 SQ. YDS.

PARALLEL CURB RAMPS

COMBINATION CURB RAMP

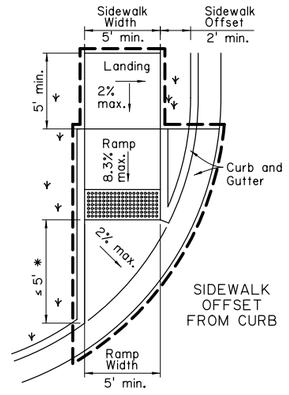

PLAN VIEW

TYPE 7

THEORETICAL PAY AREA = 13.3 SQ. YDS.

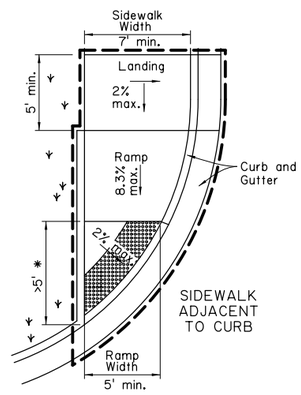

PLAN VIEW

TYPE 8

THEORETICAL PAY AREA = 15.5 SQ. YDS.

DIRECTIONAL CURB RAMPS

* Where the grade break is less than or equal to 5' from the back of curb, place detectable warning surface as shown in Type 7. Where grade break is greater than 5' from the back of the curb, place detectable warning surface as shown in Type 8.

FOR INFORMATIONAL USE

SHEET NUMBER

PARISH | CONTROL SECTION | STATE PROJECT

DESIGN MAL | DETAIL MAL | REVIEW | SERIES # 2 OF 5

CHECK BPW | CHECK BPW

APPROVED BY CHIEF ENGINEER:

DATE: 6/1/2026

NO.	DATE	REVISION OR CHANGE ORDER DESCRIPTION	BY

STATE OF LOUISIANA DEPARTMENT OF TRANSPORTATION AND DEVELOPMENT

PEDESTRIAN FACILITIES

CURB RAMPS AND DETECTABLE WARNING LOCATION

PED-01

DOTD LOUISIANA DEPARTMENT OF TRANSPORTATION & DEVELOPMENT

STANDARD PLAN

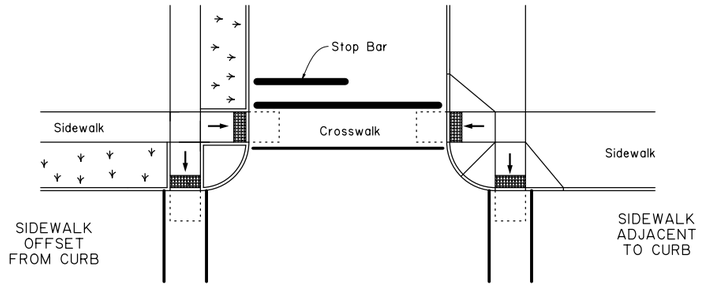

DETAIL A: CURB RAMPS PLACED OUTSIDE THE RADIUS OF A CURVE

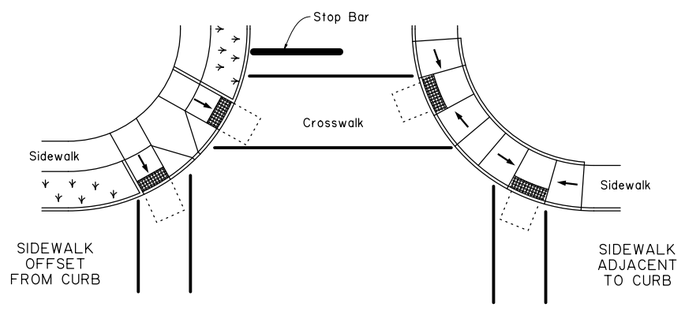

DETAIL B: PAIRED CURB RAMPS PLACED WITHIN THE RADIUS OF A CURVE

GENERAL NOTES:

1. Curb ramps placed outside the radius of the curve are preferred. Paired curb ramps placed within the radius of a curve are acceptable. Single curb ramps placed on the apex of a curb should not be used unless site constraints, such as the location of drainage structures, require it.
2. Details and dimensions of curb ramps, sidewalks, and detectable warning surfaces are shown elsewhere.
3. Striping (crosswalks and stop bars) are shown for reference only. Refer to the pavement marking standard plans for striping details.

LEGEND

- Denotes non-walking surface not part of pedestrian path
- Detectable Warning Surface
- Maneuvering Space (4'x4' Min.)
- Ramp Surface

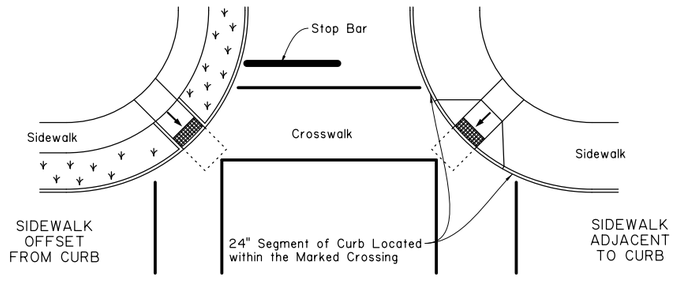

DETAIL C: SINGLE CURB RAMP PLACED ON APEX OF A CURVE
(DIAGONAL CURB RAMPS)

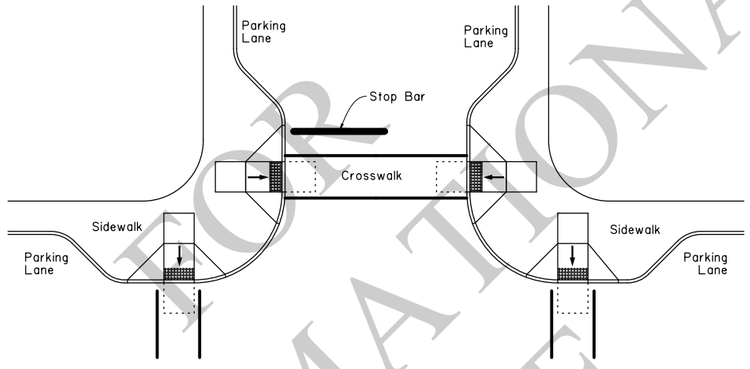

DETAIL D: CURB RAMPS PLACED ON CURB EXTENSION
(BULB-OUTS)

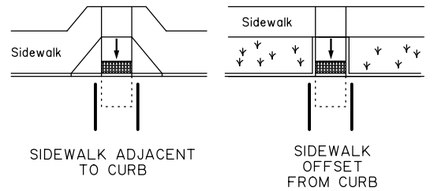

DETAIL E: CURB RAMPS PLACED AT MID-BLOCK CROSSING

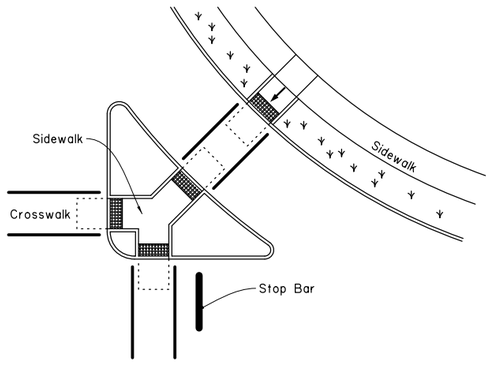

CUT-THROUGH ISLAND

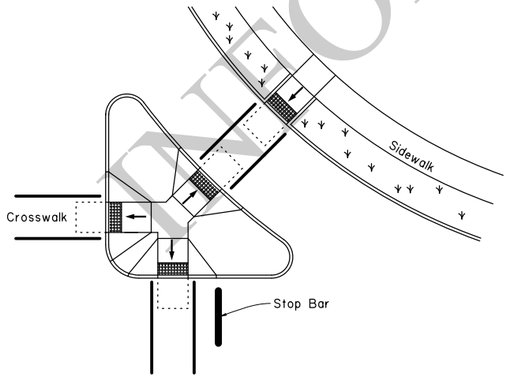

RAISED ISLAND

DETAIL F: SIDEWALKS AND CURB RAMPS AT ISLANDS

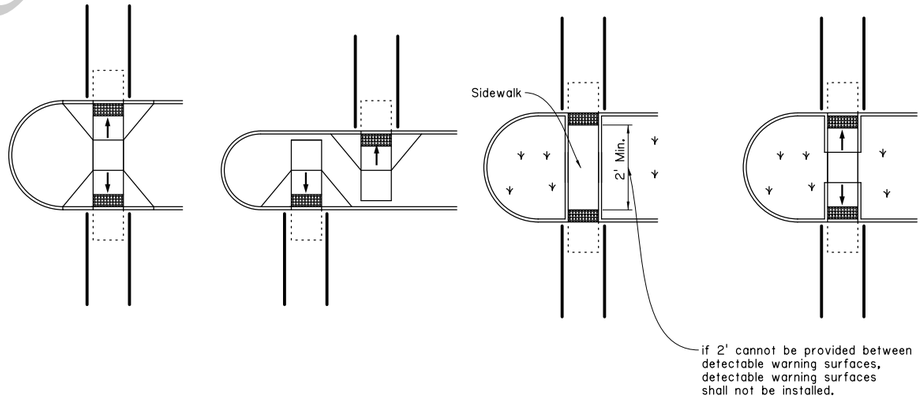

DETAIL G: SIDEWALKS AND CURB RAMPS AT MEDIANS

FOR INFORMATIONAL USE

SHEET NUMBER

PARISH	CONTROL SECTION	STATE PROJECT

DESIGN	CHECK	DETAIL	CHECK	REVIEW	SERIES # 3 OF 5
MAL	BPW	MAL	BPW		

APPROVED BY CHIEF ENGINEER: DATE: 6/1/2024

NO.	DATE	REVISION OR CHANGE ORDER DESCRIPTION	BY

PEDESTRIAN FACILITIES
TYPICAL CROSSING LAYOUTS

PED-01

DOTD
LOUISIANA DEPARTMENT OF TRANSPORTATION & DEVELOPMENT

STANDARD PLAN

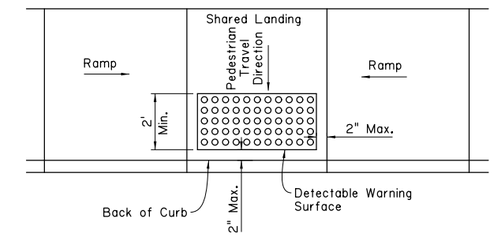

PARALLEL CURB RAMP

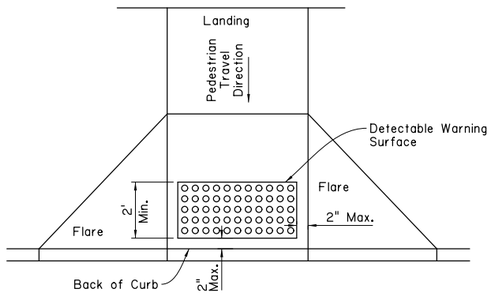

PERPENDICULAR CURB RAMP

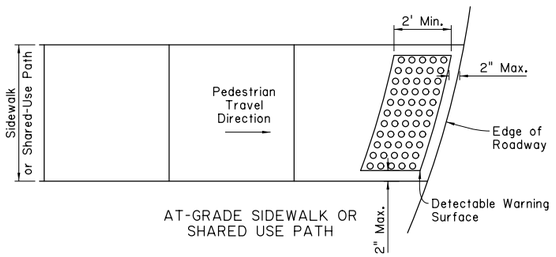

AT-GRADE SIDEWALK OR SHARED USE PATH

TYPICAL PLACEMENT OF DETECTABLE WARNING SURFACE

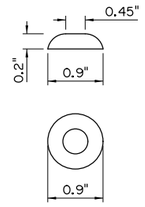

TRUNCATED DOME

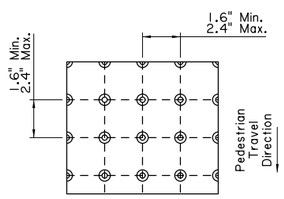

TRUNCATED DOME SPACING

Notes:

Domes shall be arranged in a square in-line pattern or radial pattern

Color Fastness: Paver's composite coloring and ultra-violet stabilization must be homogeneous through the producted.

TRUNCATED DOME DETAILS

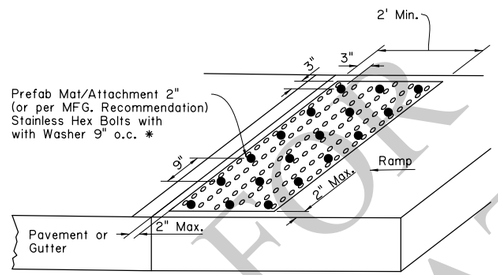

*Note: Retrofit application placed on top of existing ramp with drilled and epoxied bolts. Epoxy full surface area per manufacturer's recommendation.

PREFABRICATED MAT OPTION (INLAID)

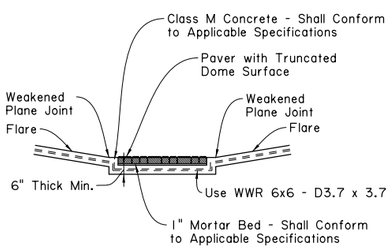

SECTION A-A

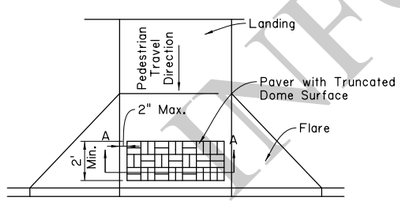

TRUNCATED DOME PATTERN CURB RAMP

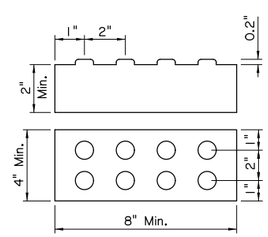

PAVER WITH TRUNCATED DOME SURFACE

Notes: Paver units shall meet all requirements of the applicable ASTM Standards. Layout pattern shall be appropriate for size of paver used. 4"x8" pavers shall be laid out in a 2x2 basket weave pattern. 12"x12" pavers shall be laid out in a block pattern.

Paver units shall be saw cut only and any cut unit shall not be less than 25% of a full unit.

Installation should meet compliance with Draft PROWAG R302.7.2 (Vertical Surface Discontinuities). Vertical surface discontinuities shall be 1/2" maximum. Discontinuities between 1/4" and 1/2" shall be beveled at a 1:2 maximum slope.

DETECTABLE WARNING SURFACE PAVER OPTION

GENERAL NOTES:

1. For ADA compliance, detectable warning surfaces must be provided on all pedestrian curb ramps, medians and pedestrian refuge islands (width 6' or greater), railroad crossings and at-grade sidewalk and shared-use paths intersecting with roadways.
2. Curb ramps must contain a detectable warning surface that consists of raised truncated domes complying with ADA guidelines. The surface must contast visually with adjoining surfaces, including side flares, in accordance with Section 706 of the Standard Specifications. Color for detectable warning surface shall contrast visually with adjoining surfaces, either light-on-dark or dark-on-light.
3. Detectable warning surfaces must be slip resistant and not allow water to accumulate.
4. Truncated domes should be aligned perpendicular or radial to the grade break between the curb ramp or at-grade sidewalk and the street.
5. Detectable warning surfaces shall be a minimum of 24" in depth in direction of pedestrian travel and extend the full width of the ramp run or landing where the pedestrian access route enters the street. Some detectable warning products may require a concrete border. The concrete border should not exceed 2".
6. Detectable warning surfaces shall be placed at the back of curb or no greater than 5' from the back of curb. Detectable warning surfaces may be curved along the corner radius. Refer to sheet 2 for typical placement of detectable warning surfaces on curb ramp types.
7. Detectable warning surfaces may be stamped, constructed of brick pavers or inlaid prefabricated mats attached by epoxy adhesive and mechanical attachment. Other detectable warning installations may be installed with approval from the Project Engineer, provided that the detectable warning surface meets ADA guidelines. No painted surfaces will be allowed.
8. Any retrofit application of detectable warning surfaces must have beveled edges. The beveled edge shall not exceed a slope greater than 1:2.

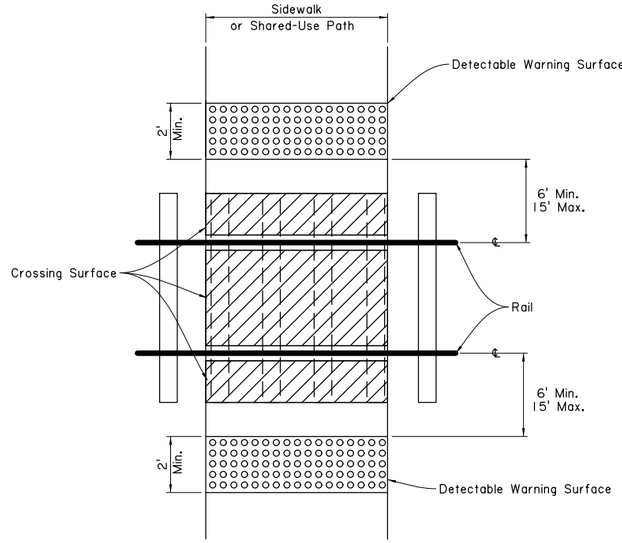

PLAN VIEW

LOCATION OF DETECTABLE WARNING SURFACES AT RAILROAD CROSSINGS

Note: Rows of truncated domes should be aligned parallel with the direction of wheelchair travel.

FOR INFORMATIONAL USE

SHEET NUMBER

PARISH | CONTROL SECTION | STATE PROJECT

DESIGN MAL | DETAIL MAL | REVIEW SERIES # 4 OF 5
CHECK BPW | CHECK BPW

APPROVED BY CHIEF ENGINEER: DATE: 4/1/2026

REVISION OR CHANGE ORDER DESCRIPTION | BY | DATE | NO.

PEDESTRIAN FACILITIES
DETECTABLE WARNING SURFACES

PED-01

DOTD LOUISIANA DEPARTMENT OF TRANSPORTATION & DEVELOPMENT

STANDARD PLAN

GENERAL NOTES:

1. Weakened plane joints are required at all sidewalk ramps or driveways slope break lines.
2. Separate curb ramps and landing from adjacent sidewalk with preformed joint filler of 1/2".

JOINT LEGEND

- (A) 1/2" Expansion Joints (Preformed Joint Filler)
- (B) 1/8" Weakened Plane Joint
- (C) Construction Joint
- (D) Cold Joint with Bond Breaker

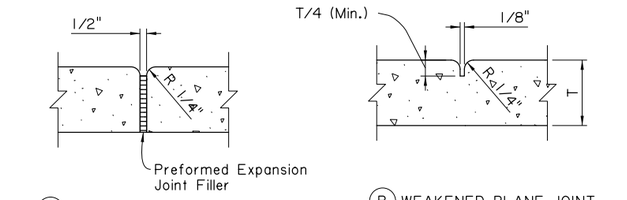

(A) EXPANSION JOINT

(B) WEAKENED PLANE JOINT

(C) CONSTRUCTION JOINT

(D) COLD JOINT WITH BOND BREAKER

JOINT DETAILS

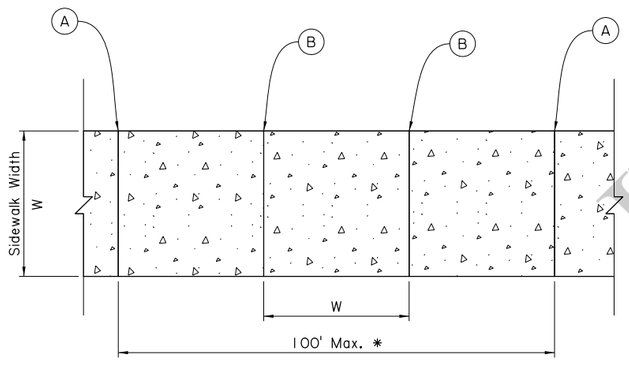

PLAN VIEW
SIDEWALK JOINT LAYOUT

* Joint spacing to be approved by Project Engineer

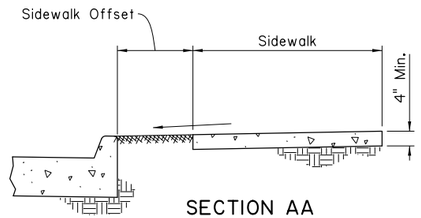

SECTION AA
OFFSET SIDEWALK

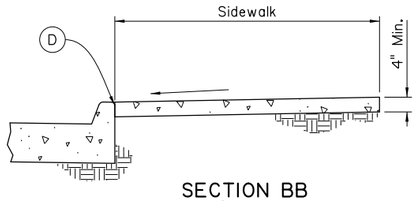

SECTION BB
SIDEWALK ADJACENT TO CURB

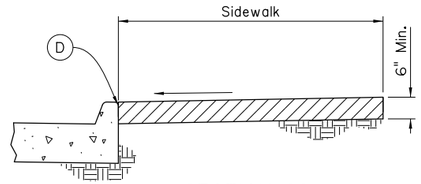

SECTION CC
SIDEWALK ADJACENT TO CURB
(WITHIN RADIUS OF TURNOUT)

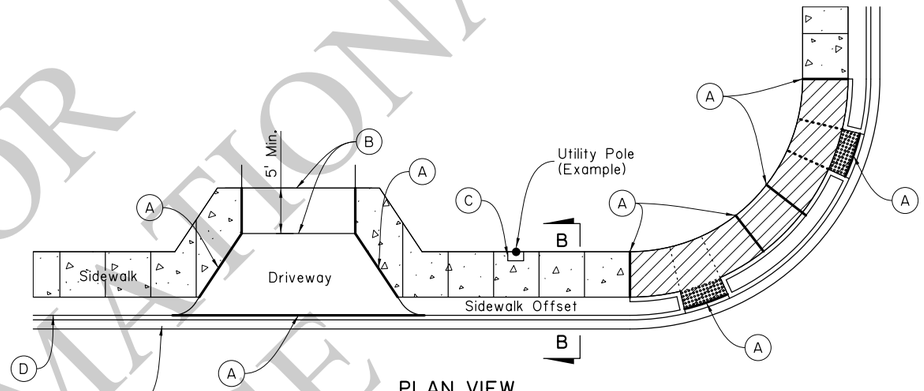

PLAN VIEW
SIDEWALK OFFSET FROM CURB

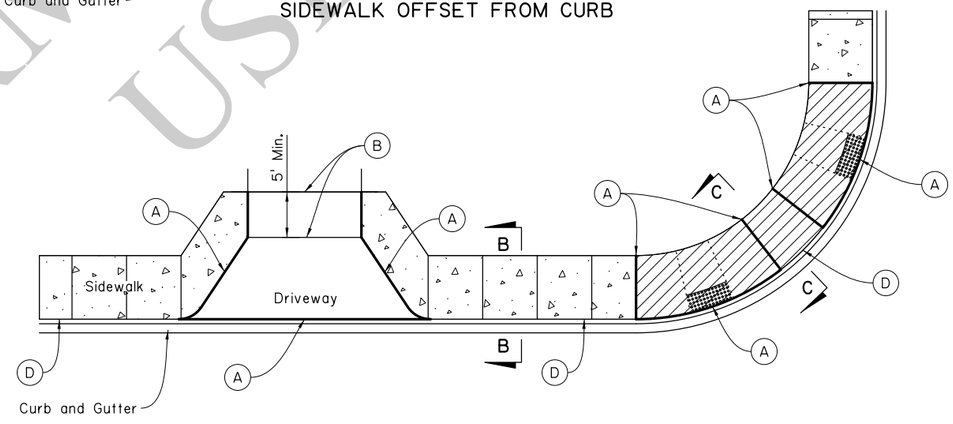

PLAN VIEW
SIDEWALK ADJACENT TO CURB

4" Thick Concrete

6" Thick Concrete

Note: Driveways and curb ramps are shown for reference only. Refer to the driveway standard plans and curb ramp sheet for details.

FOR INFORMATIONAL USE

SHEET NUMBER

PARISH | CONTROL SECTION | STATE PROJECT

DESIGN MAL | CHECK BPW | DETAIL MAL | CHECK BPW | REVIEW | SERIES # 5 OF 5

APPROVED BY CHIEF ENGINEER: DATE: 6/1/2026

REVISION OR CHANGE ORDER DESCRIPTION | BY | NO. | DATE

PEDESTRIAN FACILITIES
JOINT DETAILS

PED-01

DOTD LOUISIANA DEPARTMENT OF TRANSPORTATION & DEVELOPMENT

STANDARD PLAN

GENERAL NOTES:

1. THIS STRUCTURE MEETS ALL DOTD HYDRAULIC PERFORMANCE CRITERIA WHEN USED IN ACCORDANCE WITH THE DOTD HYDRAULICS MANUAL AND ALL DOTD HYDRAULIC DESIGN POLICIES.
2. CONSTRUCTION SPECIFICATIONS: LATEST APPROVED LA DOTD STANDARD SPECIFICATIONS.
3. ALL EXPOSED CORNERS SHALL HAVE ¾" CHAMFER UNLESS OTHERWISE NOTED.
4. DIMENSIONS RELATING TO REINFORCING STEEL FABRICATION ARE OUT-TO-OUT OF BARS AND DIMENSIONS RELATING TO REINFORCING STEEL SPACING ARE CENTER-TO-CENTER OF BARS.
5. REINFORCING STEEL SHALL HAVE 2" COVER UNLESS OTHERWISE SPECIFIED.
6. IF PRECAST CATCH BASIN IS USED, PLEASE REFER TO STANDARD PLAN PC-01 FOR DETAILS AND SPECIFICATIONS.
7. PAVED GUTTER DRAINS SHALL BE POURED MONOLITHICALLY.

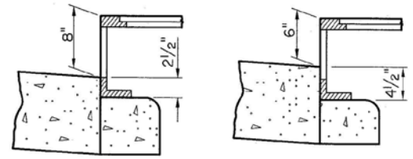

INLET CONFIGURATION

WHEN USED WITH 6" BARRIER CURB

WHEN USED WITH 4" MOUNTABLE CURB

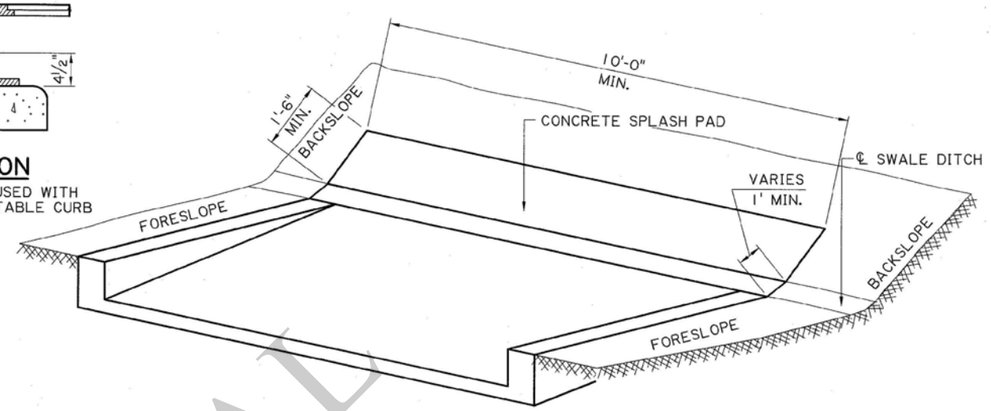

PARTIAL VIEW SHOWING PAVED GUTTER DRAIN WITHOUT DROP INLET

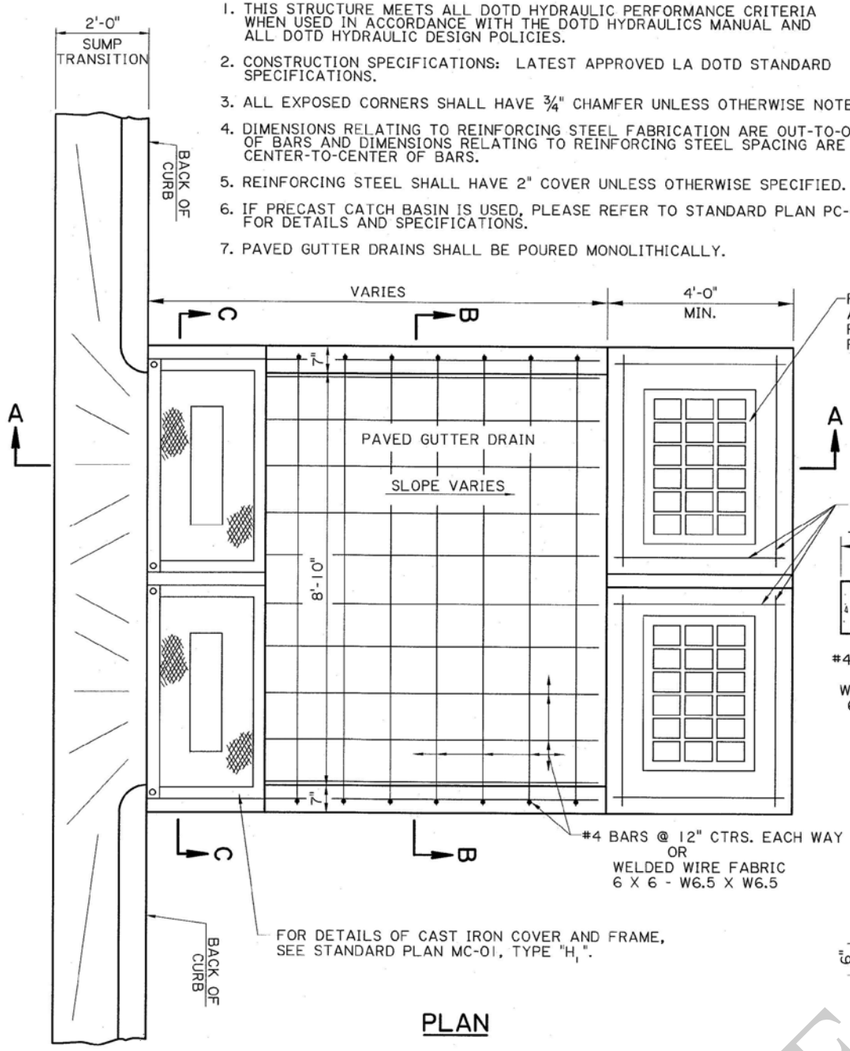

PLAN

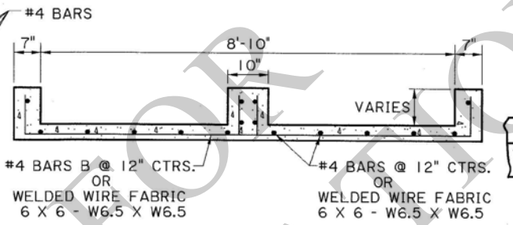

SECTION C-C

(CAST IRON COVER NOT SHOWN)

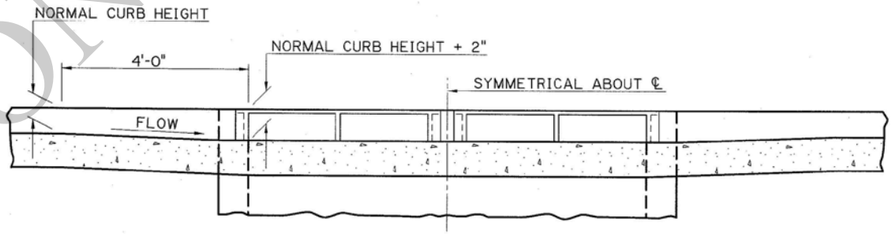

TRANSITION IN CURB HEIGHT GUTTER DRAIN AT LOW POINT

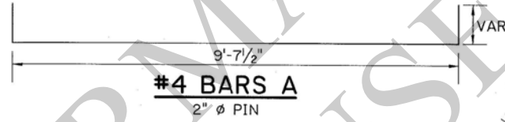

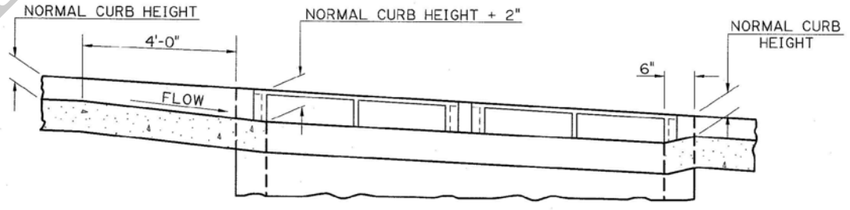

TRANSITION IN CURB HEIGHT GUTTER DRAIN ON A GRADE

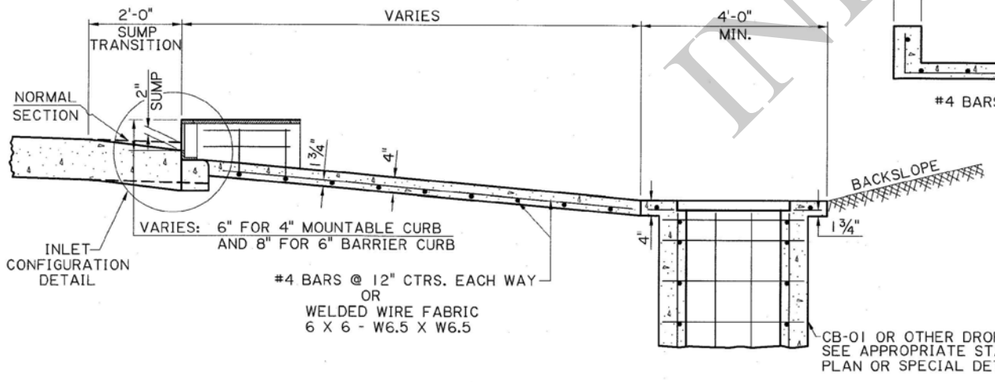

SECTION A-A

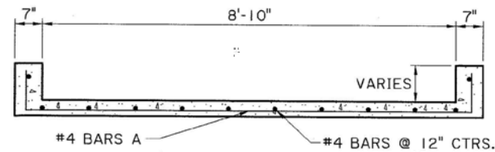

SECTION B-B

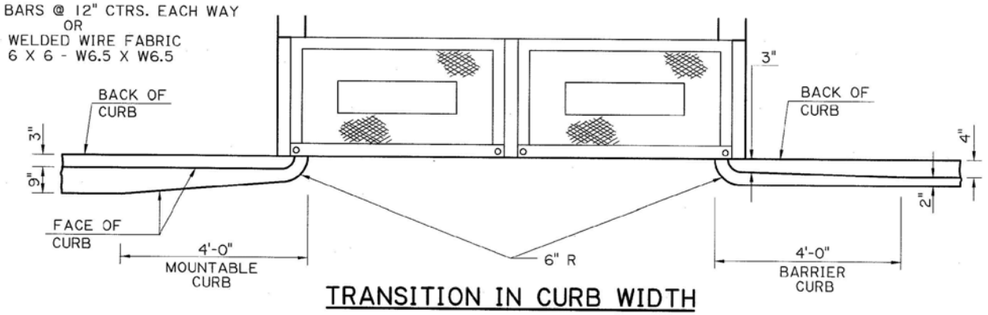

TRANSITION IN CURB WIDTH

(TYPICAL)

FOR INFORMATIONAL USE

SHEET NUMBER

PARISH | CONTROL SECTION | STATE PROJECT

DESIGN CHECK | DETAIL CHECK | REVIEW | SERIES # 1 OF 1

APPROVED BY CHIEF ENGINEER:

DATE: 6/1/2026

NO.	DATE	REVISION OR CHANGE ORDER DESCRIPTION	BY

STATE OF LOUISIANA DEPARTMENT OF TRANSPORTATION AND DEVELOPMENT

DOUBLE PAVED GUTTER DRAIN

PG-DRAIN (DOUBLE)

DOTD LOUISIANA DEPARTMENT OF TRANSPORTATION & DEVELOPMENT

STANDARD PLAN

GENERAL NOTES:

1. THIS STRUCTURE MEETS ALL DOTD HYDRAULIC PERFORMANCE CRITERIA WHEN USED IN ACCORDANCE WITH THE DOTD HYDRAULICS MANUAL AND ALL DOTD HYDRAULIC DESIGN POLICIES.
2. CONSTRUCTION SPECIFICATIONS: LATEST APPROVED LA DOTD STANDARD SPECIFICATIONS.
3. ALL EXPOSED CORNERS TO HAVE ¾" CHAMFER UNLESS OTHERWISE NOTED.
4. DIMENSIONS RELATING TO REINFORCING STEEL FABRICATION ARE OUT-TO-OUT OF BARS AND DIMENSIONS RELATING TO REINFORCING STEEL SPACING ARE CENTER-TO-CENTER OF BARS.
5. REINFORCING STEEL SHALL HAVE 2" COVER UNLESS OTHERWISE SPECIFIED.
6. IF PRECAST CATCH BASIN IS USED, PLEASE REFER TO STANDARD PLAN PC-01 FOR DETAILS AND SPECIFICATIONS.

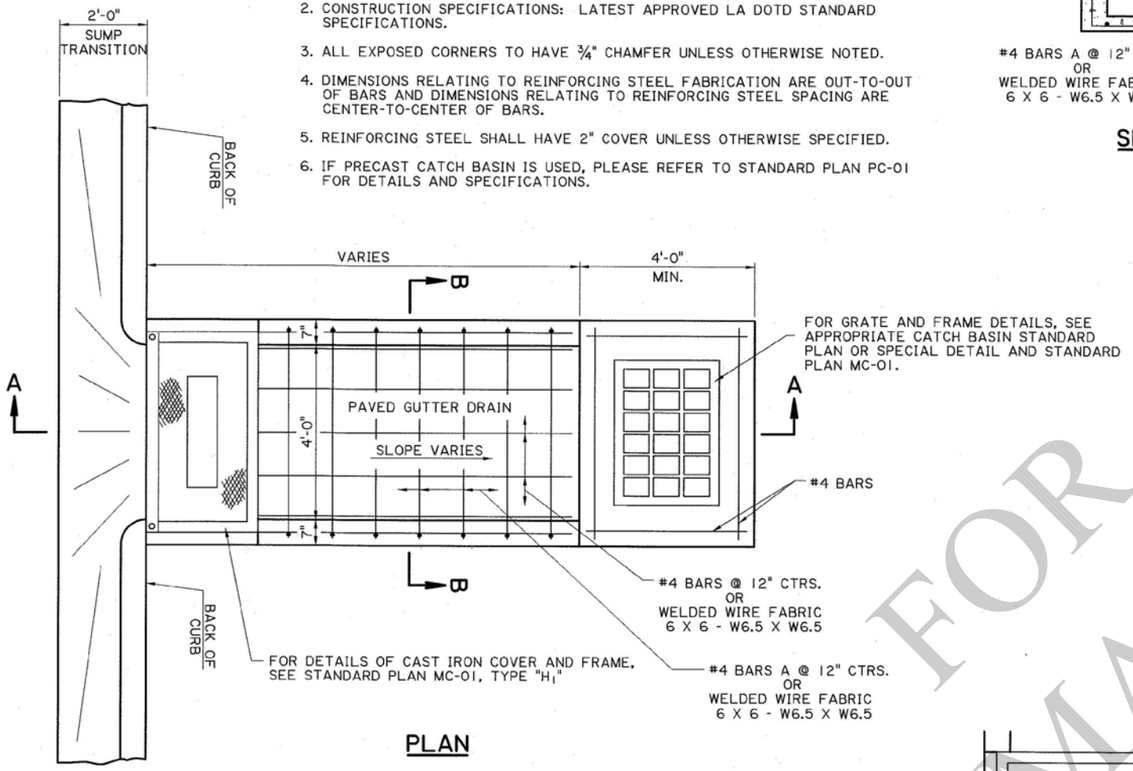

PLAN

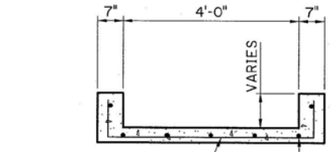

SECTION B-B

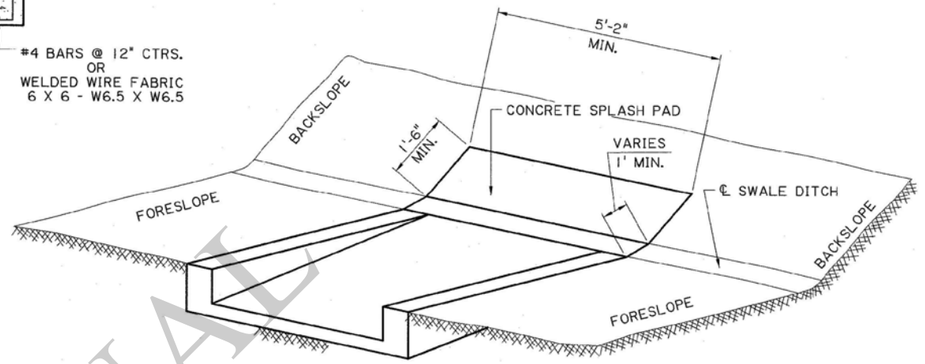

PARTIAL VIEW SHOWING
PAVED GUTTER DRAIN WITHOUT DROP INLET

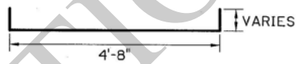

#4 BARS A
2" ø PIN

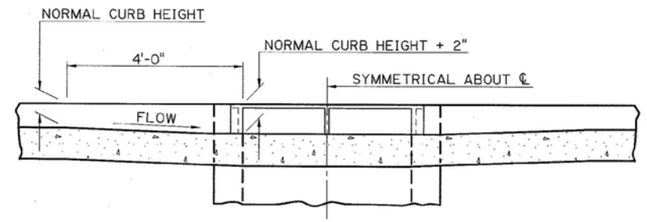

TRANSITION IN CURB HEIGHT
GUTTER DRAIN AT LOW POINT

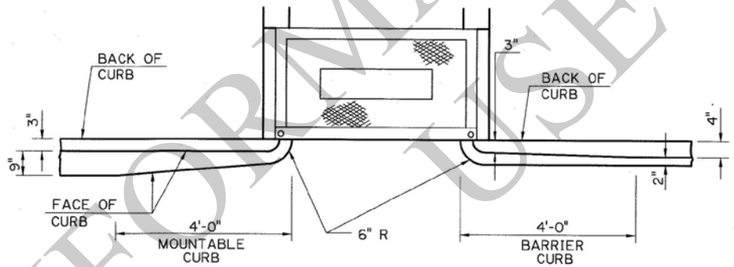

TRANSITION IN CURB WIDTH
(TYPICAL)

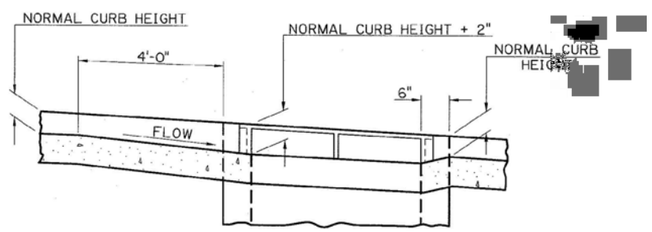

TRANSITION IN CURB HEIGHT
GUTTER DRAIN ON A GRADE

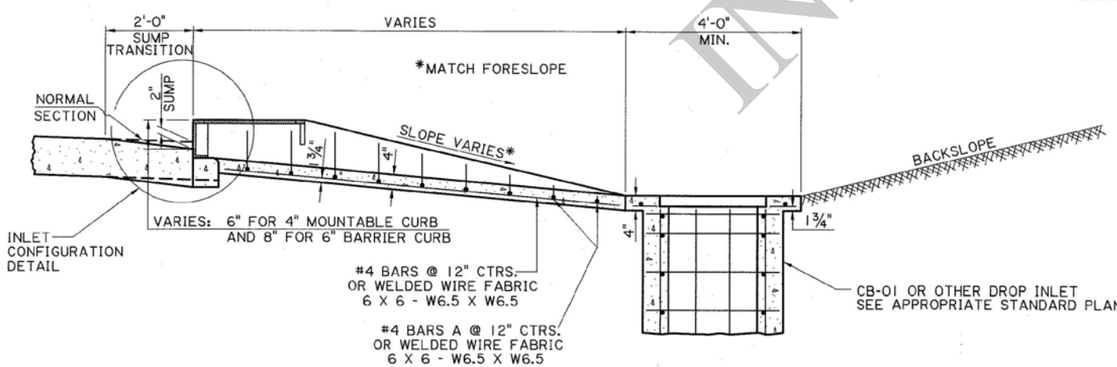

SECTION A-A

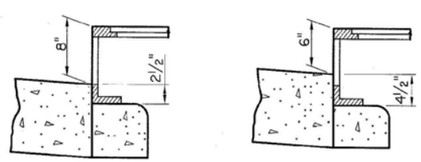

INLET CONFIGURATION

WHEN USED WITH 6" BARRIER CURB

WHEN USED WITH 4" MOUNTABLE CURB

FOR INFORMATIONAL USE

SHEET NUMBER

PARISH | CONTROL SECTION | STATE PROJECT

DESIGN CHECK | DETAIL CHECK | REVIEW | SERIES # 1 OF 1

APPROVED BY CHIEF ENGINEER: DATE: 6/1/2026

NO. | DATE | REVISION OR CHANGE ORDER DESCRIPTION | BY

SINGLE PAVED GUTTER DRAIN

PG-DRAIN (SINGLE)

DOTD LOUISIANA DEPARTMENT OF TRANSPORTATION & DEVELOPMENT

STANDARD PLAN

GENERAL NOTES:

1. THIS STRUCTURE MEETS ALL DOTD HYDRAULIC PERFORMANCE CRITERIA WHEN USED IN ACCORDANCE WITH THE DOTD HYDRAULICS MANUAL AND ALL DOTD HYDRAULIC DESIGN POLICIES.
2. CONSTRUCTION SPECIFICATIONS: LATEST APPROVED LA DOTD STANDARD SPECIFICATIONS.
3. ALL EXPOSED CORNERS SHALL HAVE ¾" CHAMFER UNLESS OTHERWISE NOTED.
4. DIMENSIONS RELATING TO REINFORCING STEEL FABRICATION ARE OUT-TO-OUT OF BARS AND DIMENSIONS RELATING TO REINFORCING STEEL SPACING ARE CENTER-TO-CENTER OF BARS.
5. REINFORCING STEEL SHALL HAVE 2" COVER UNLESS OTHERWISE SPECIFIED.
6. IF PRECAST CATCH BASIN IS USED, PLEASE REFER TO STANDARD PLAN PC-01 FOR DETAILS AND SPECIFICATIONS.
7. PAVED GUTTER DRAINS SHALL BE POURED MONOLITHICALLY.

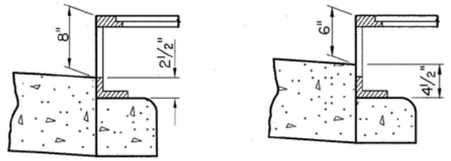

INLET CONFIGURATION

WHEN USED WITH 6" BARRIER CURB

WHEN USED WITH 4" MOUNTABLE CURB

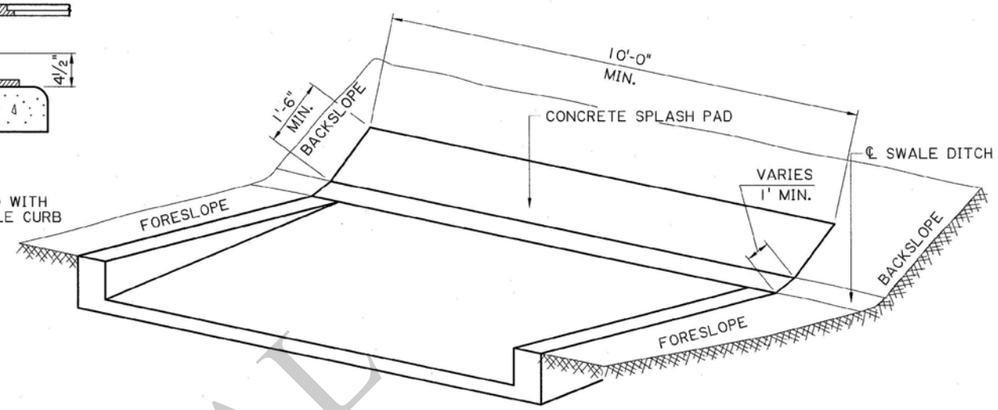

PARTIAL VIEW SHOWING PAVED GUTTER DRAIN WITHOUT DROP INLET

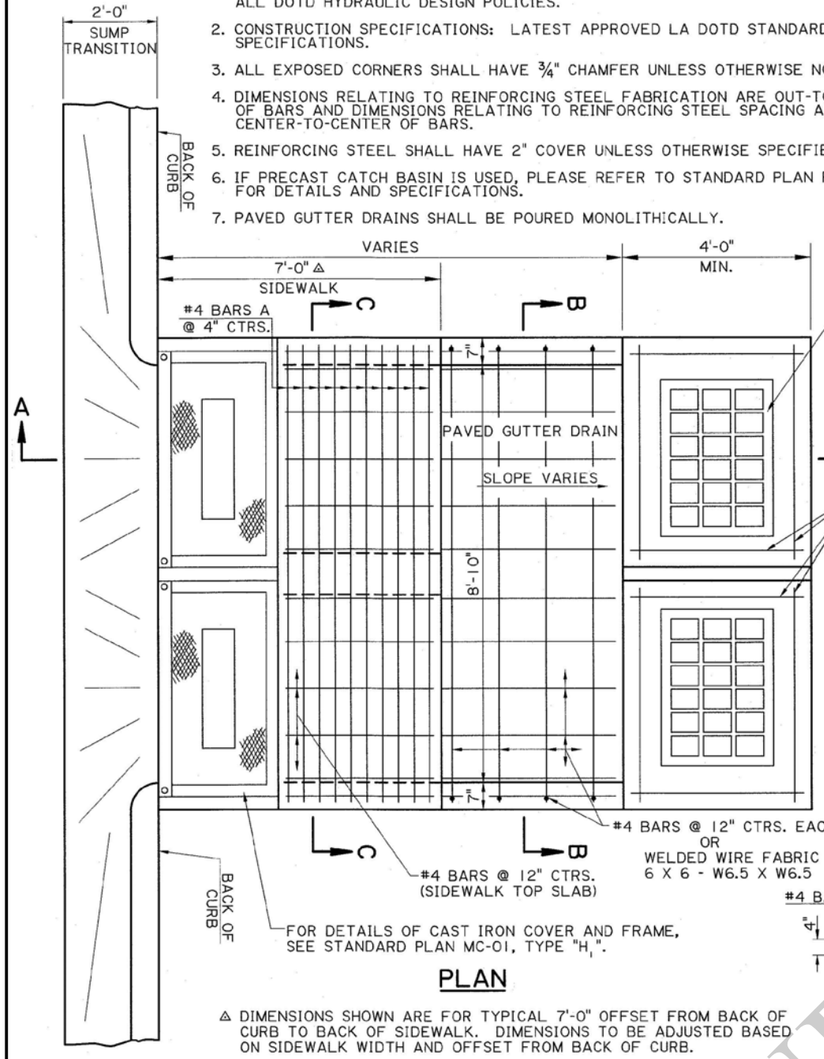

PLAN

⚠ DIMENSIONS SHOWN ARE FOR TYPICAL 7'-0" OFFSET FROM BACK OF CURB TO BACK OF SIDEWALK. DIMENSIONS TO BE ADJUSTED BASED ON SIDEWALK WIDTH AND OFFSET FROM BACK OF CURB.

FOR GRATE AND FRAME DETAILS, SEE APPROPRIATE CATCH BASIN STANDARD PLAN OR SPECIAL DETAIL AND STANDARD PLAN MC-01.

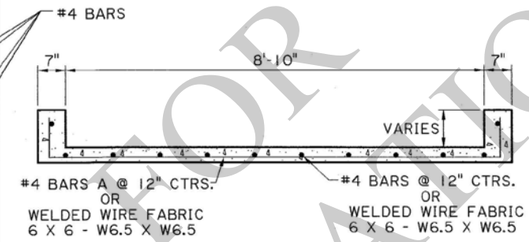

SECTION B-B

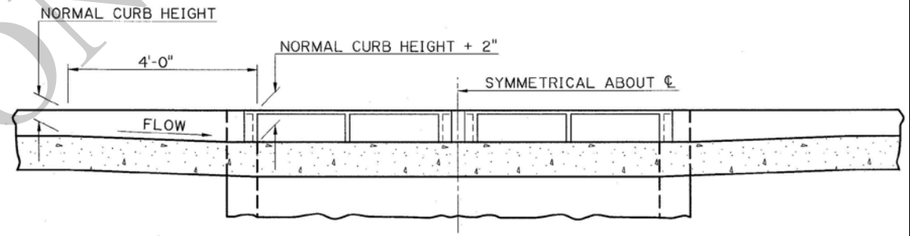

TRANSITION IN CURB HEIGHT GUTTER DRAIN AT LOW POINT

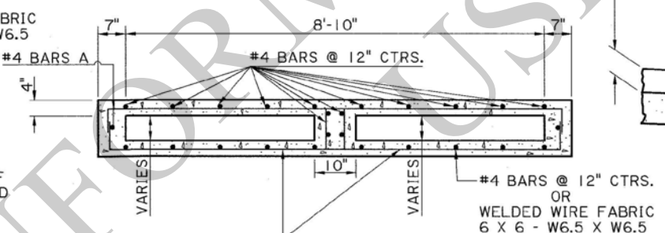

SECTION C-C

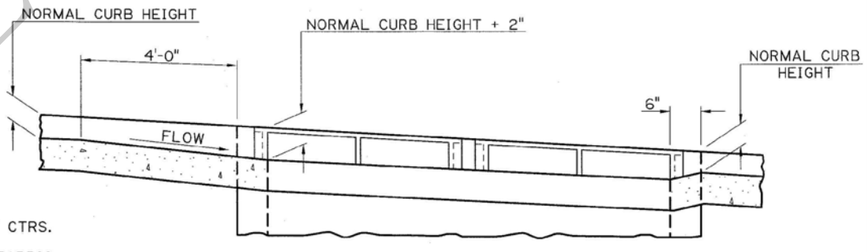

TRANSITION IN CURB HEIGHT GUTTER DRAIN ON A GRADE

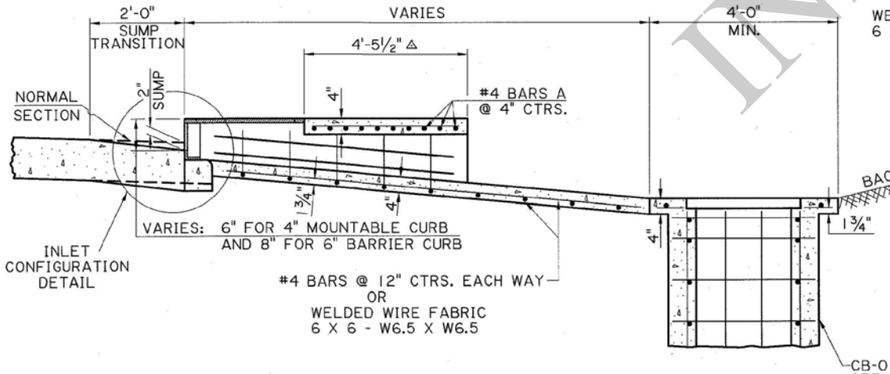

SECTION A-A

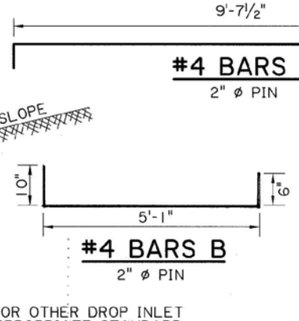

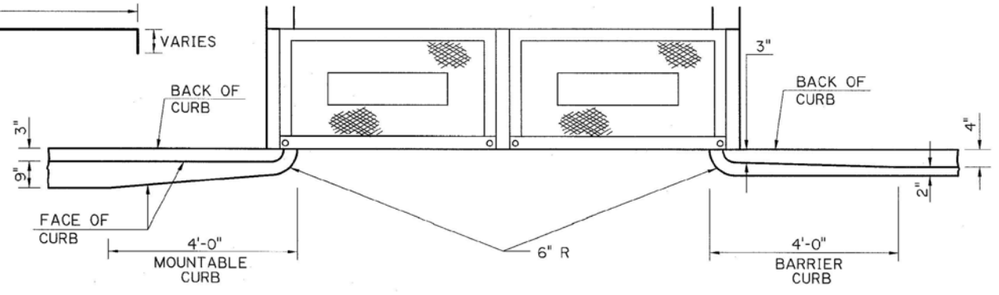

TRANSITION IN CURB WIDTH

(TYPICAL)

FOR INFORMATIONAL USE

SHEET NUMBER

PARISH | CONTROL SECTION | STATE PROJECT

DESIGN CHECK | DETAIL CHECK | REVIEW | SERIES # 1 OF 1

APPROVED BY CHIEF ENGINEER:

DATE: 6/1/2026

NO.	DATE	REVISION OR CHANGE ORDER DESCRIPTION	BY

STATE OF LOUISIANA DEPARTMENT OF TRANSPORTATION AND DEVELOPMENT

DOUBLE PAVED GUTTER DRAIN WITH SIDEWALK

PG-DRAIN WITH SIDEWALK (DOUBLE)

DOTD LOUISIANA DEPARTMENT OF TRANSPORTATION & DEVELOPMENT

STANDARD PLAN

GENERAL NOTES:

1. THIS STRUCTURE MEETS ALL DOTD HYDRAULIC PERFORMANCE CRITERIA WHEN USED IN ACCORDANCE WITH THE DOTD HYDRAULICS MANUAL AND ALL DOTD HYDRAULIC DESIGN POLICIES.
2. CONSTRUCTION SPECIFICATIONS: LATEST APPROVED LA DOTD STANDARD SPECIFICATIONS.
3. ALL EXPOSED CORNERS TO HAVE ¾" CHAMFER UNLESS OTHERWISE NOTED.
4. DIMENSIONS RELATING TO REINFORCING STEEL FABRICATION ARE OUT-TO-OUT OF BARS AND DIMENSIONS RELATING TO REINFORCING STEEL SPACING ARE CENTER-TO-CENTER OF BARS.
5. REINFORCING STEEL SHALL HAVE 2" COVER UNLESS OTHERWISE SPECIFIED.
6. IF PRECAST CATCH BASIN IS USED, PLEASE REFER TO STANDARD PLAN PC-01 FOR DETAILS AND SPECIFICATIONS.

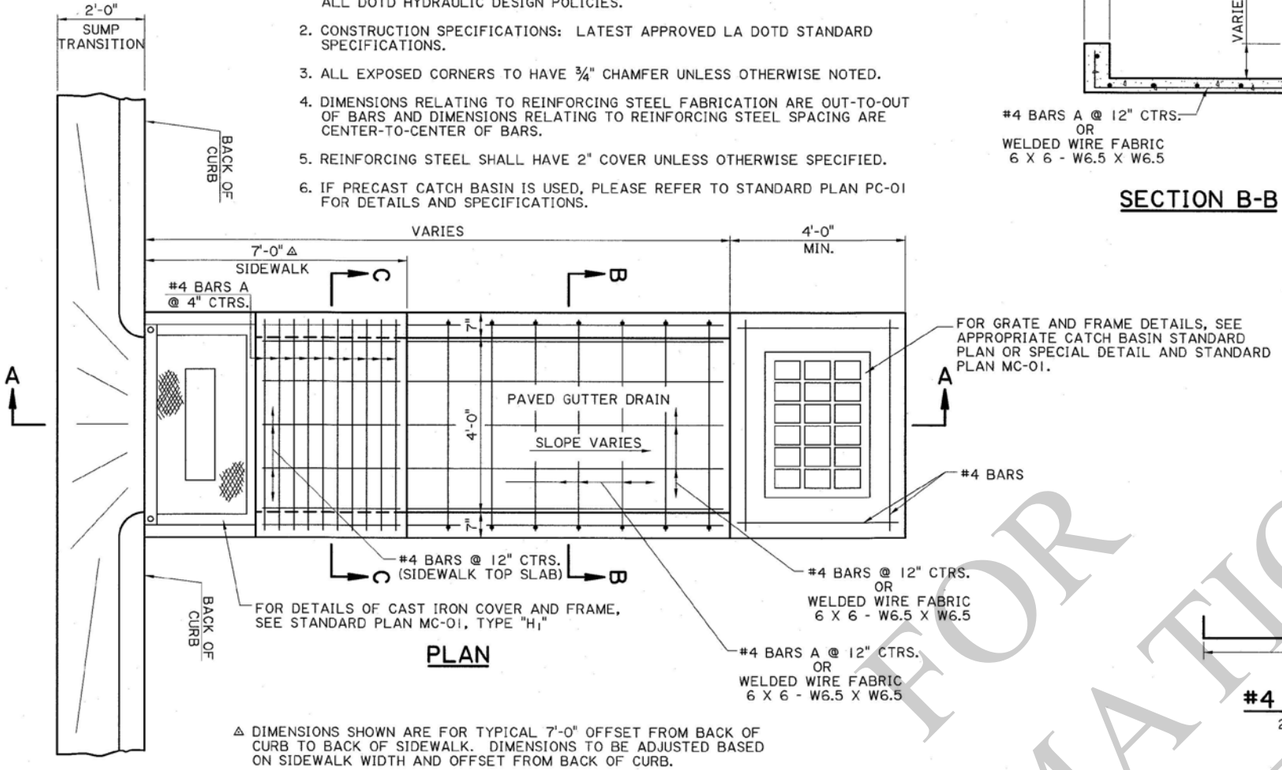

PLAN

△ DIMENSIONS SHOWN ARE FOR TYPICAL 7'-0" OFFSET FROM BACK OF CURB TO BACK OF SIDEWALK. DIMENSIONS TO BE ADJUSTED BASED ON SIDEWALK WIDTH AND OFFSET FROM BACK OF CURB.

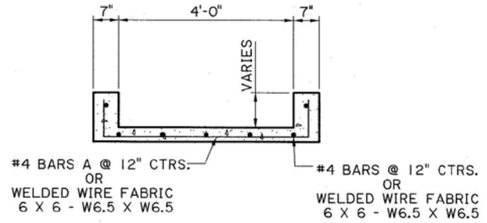

SECTION B-B

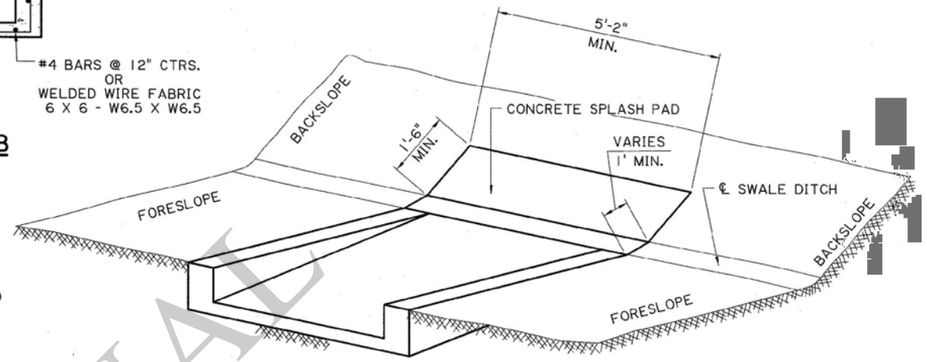

PARTIAL VIEW SHOWING
PAVED GUTTER DRAIN WITHOUT DROP INLET

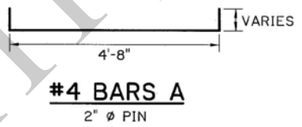

#4 BARS A
2" ø PIN

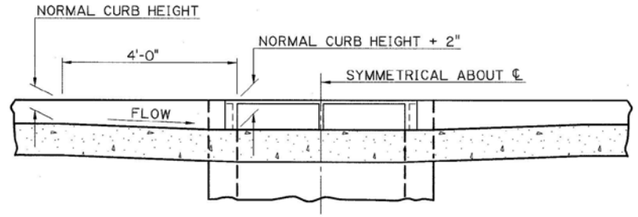

TRANSITION IN CURB HEIGHT
GUTTER DRAIN AT LOW POINT

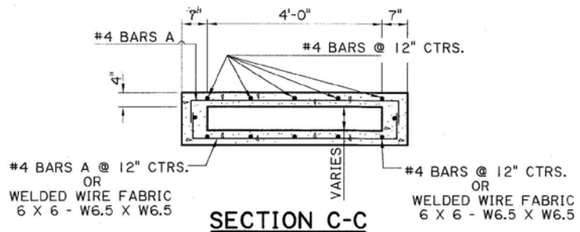

SECTION C-C

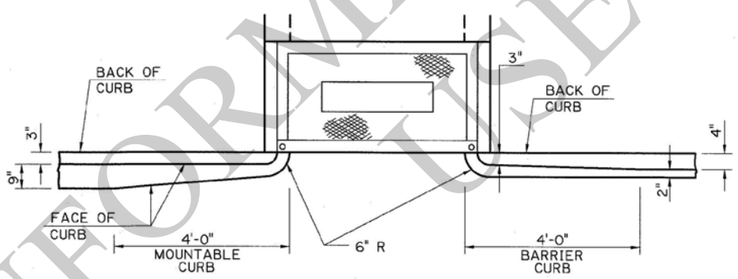

TRANSITION IN CURB WIDTH
(TYPICAL)

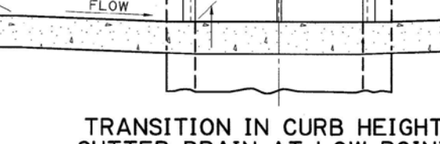

TRANSITION IN CURB HEIGHT
GUTTER DRAIN ON A GRADE

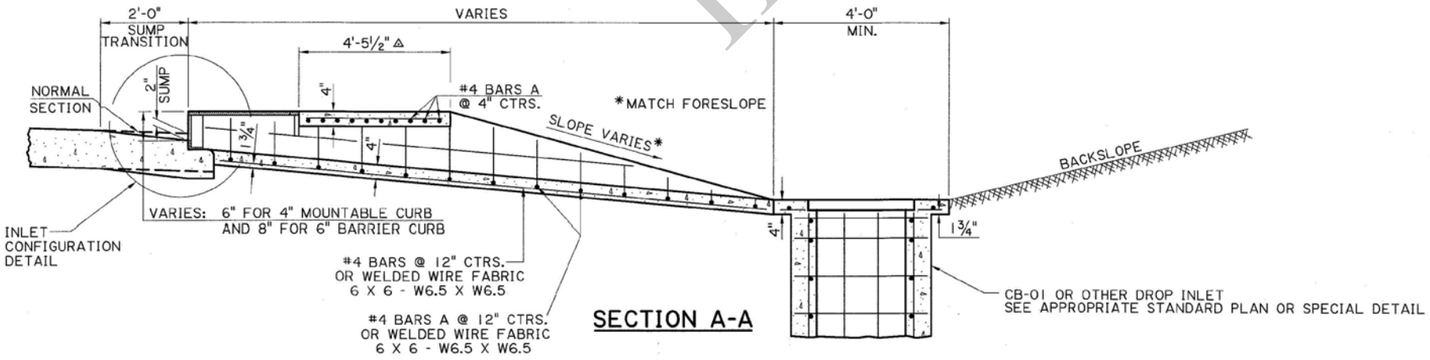

SECTION A-A

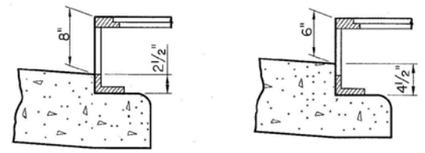

INLET CONFIGURATION

WHEN USED WITH 6" BARRIER CURB

WHEN USED WITH 4" MOUNTABLE CURB

FOR INFORMATIONAL USE

SHEET NUMBER

PARISH | CONTROL SECTION | STATE PROJECT

DESIGN CHECK | DETAIL CHECK | REVIEW | SERIES # 1 OF 1

APPROVED BY CHIEF ENGINEER:

DATE: 6/1/2026

REVISION OR CHANGE ORDER DESCRIPTION | BY | NO. | DATE

STATE OF LOUISIANA

SINGLE PAVED GUTTER DRAIN WITH SIDEWALK

PG-DRAIN WITH SIDEWALK (SINGLE)

DOTD LOUISIANA DEPARTMENT OF TRANSPORTATION & DEVELOPMENT

STANDARD PLAN

9/21/2020 09:51

Ⓐ CENTERLINE OF TWO-LANE ROADWAY WITH TWO-WAY TRAFFIC

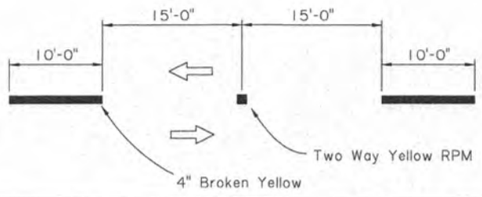

Ⓑ LANE LINE BETWEEN LANES OF TRAFFIC TRAVELING IN THE SAME DIRECTION

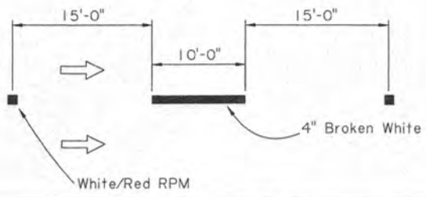

Ⓒ CENTERLINE OF MULTI-LANE UNDIVIDED ROADWAY

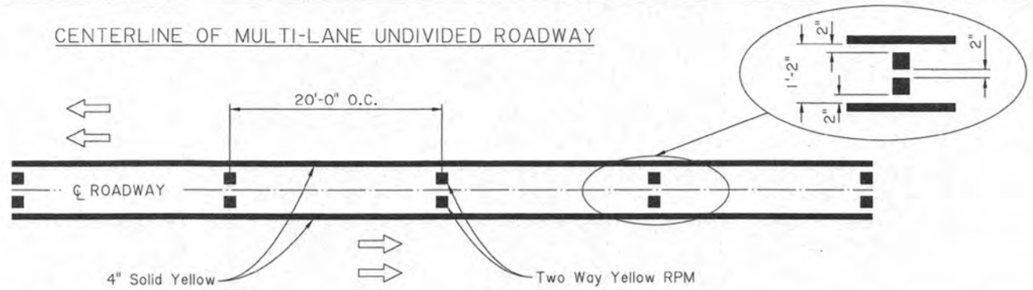

Ⓓ CONTRAST LANE LINE BETWEEN LANES ON PORTLAND CEMENT CONCRETE ADT ≥ 80,000

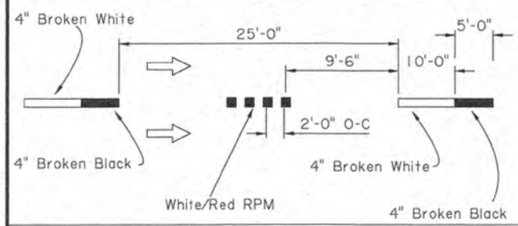

Ⓔ CONTRAST LANE LINE BETWEEN LANES ON PORTLAND CEMENT CONCRETE ADT < 80,000

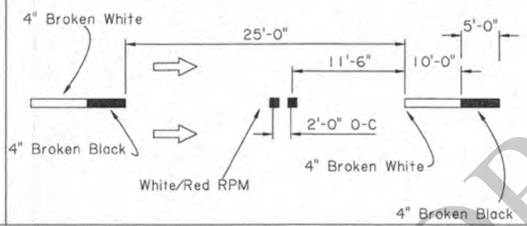

Ⓕ LANE LINE BETWEEN LANES ON ASPHALT CONCRETE WITH ADT ≥ 80,000

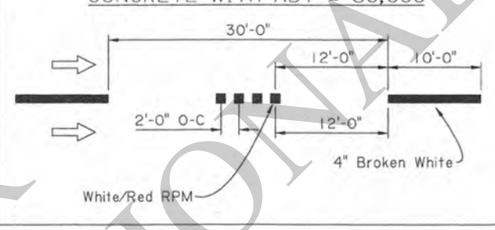

Ⓖ LANE LINE BETWEEN LANES ON ASPHALT CONCRETE WITH ADT < 80,000

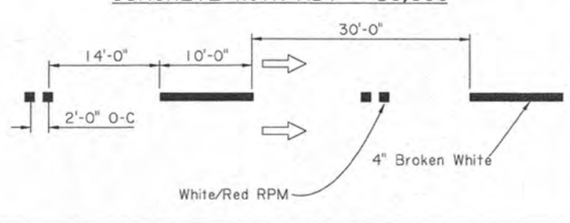

Ⓗ CONTRAST LANE LINE BETWEEN LANES ON PORTLAND CONCRETE ADT ≥ 80,000

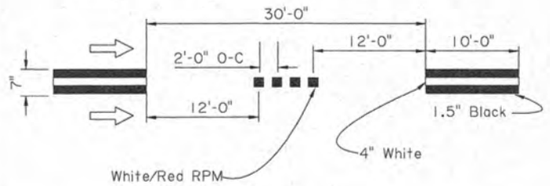

Ⓘ CENTERLINE OF TWO-LANE ROADWAY WITH TWO-WAY TRAFFIC WITH PASSING RESTRICTIONS

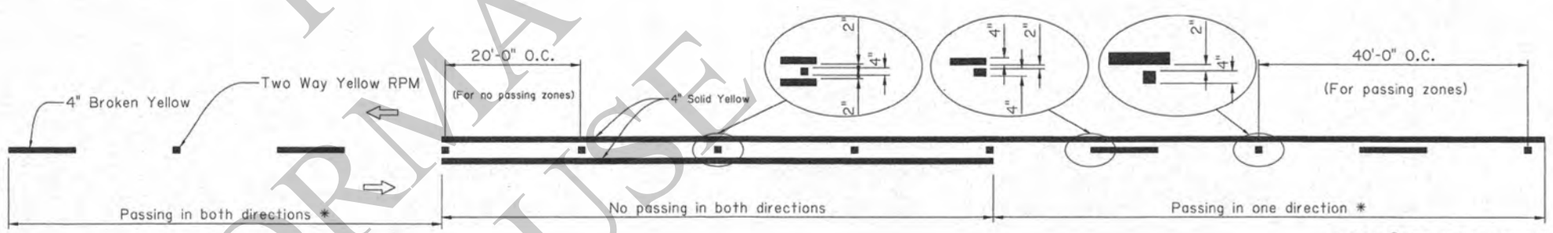

* See Ⓐ for broken line dimensions.

Ⓙ CONTRAST LANE LINE BETWEEN LANES ON PORTLAND CONCRETE ADT < 80,000

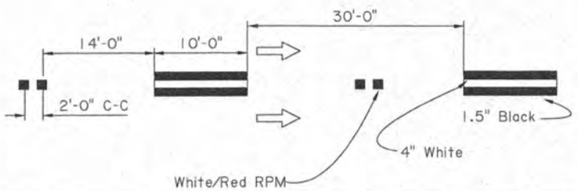

Ⓚ TYPE A DOTTED

Used for entrance, exit and auxiliary lanes, lane drop markings and shared use bicycle paths.

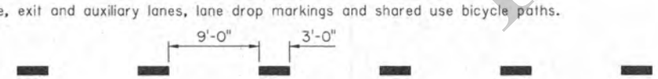

Note: Width and color shall match line extending unless otherwise noted.

Ⓛ TYPE B DOTTED

Used for lane line extensions through intersections, turn lane taper markings, edge line extensions and bulb outs.

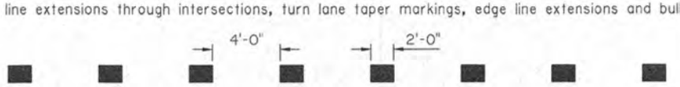

Note: Width and color shall match line extending unless otherwise noted.

GENERAL NOTES:

1. 4" Edge lines shall be placed on all roadways.
2. Place edge lines, centerlines and lane lines to avoid longitudinal joints as directed by the project engineer.
3. Edge lines in a curb and gutter section should be kept out of the gutter and clear from debris.
4. If rumble strips are used, striping details remain unchanged.
5. Centerlines shall be placed on roadways with a traveled way width of 16 feet or greater.
6. Where the clear width of a bridge is less than the clear width of the roadway, reflectorized pavement markers shall be placed adjacent to the edge line at 20' centers.
7. ⇨ indicates the direction of travel (not a pavement marker).
8. For non-interstate striping, use one Raised Reflectorized Pavement Marker.
9. White Reflectorized Pavement Marker faces same direction traffic and red faces opposing traffic.

FOR INFORMATIONAL USE

SHEET NUMBER

PARISH | CONTROL SECTION | STATE PROJECT

DESIGNED G. LEBLANC
CHECKED J. COLVIN
DETAILED K. WILLIAMS
CHECKED G. LEBLANC
DATE SHEET

DATE 2/28/19

APPROVED BY CHIEF ENGINEER

STATE OF LOUISIANA

STATE OF LOUISIANA
GARY N. LeBLANC
REG. No. 28220
REGISTERED PROFESSIONAL ENGINEER IN CIVIL ENGINEERING

2-27-19

PM-01

Centerline and Edgeline Markings

PAVEMENT MARKING DETAILS

DOTD TRAFFIC ENGINEERING

IP_PWP:dms12298\PM-01.dgn

9/21/2020 09:51

Ⓐ TURN ARROW AND ONLY WORD MARKING

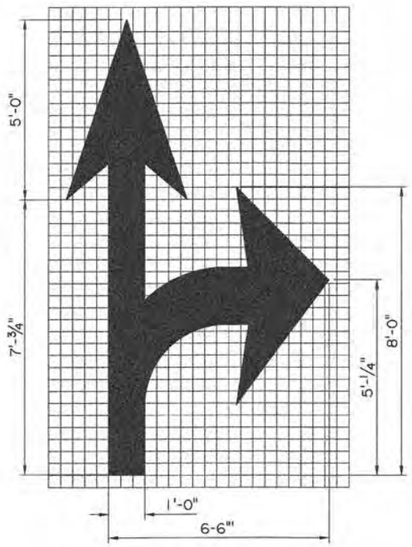

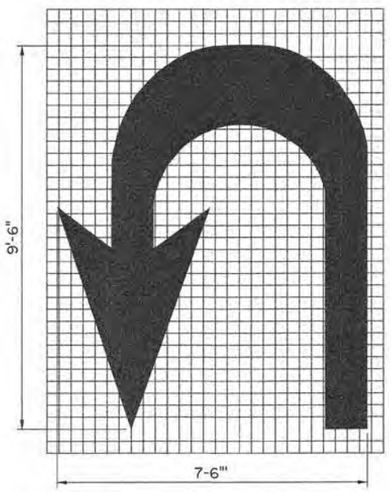

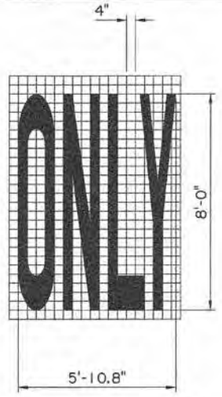

*For left turn arrow, use mirror image.

Ⓑ BIKE SYMBOL

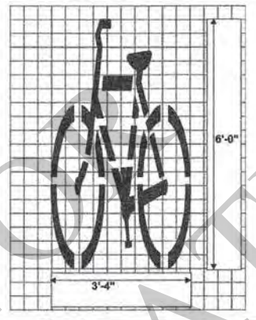

Ⓒ LANE REDUCTION ARROW

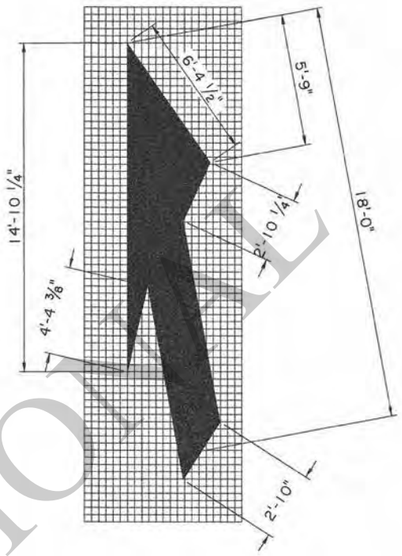

*For left lane reduction, use mirror image.

Ⓓ DIRECTIONAL ARROWS FOR ROUNDABOUTS (FISHHOOK)

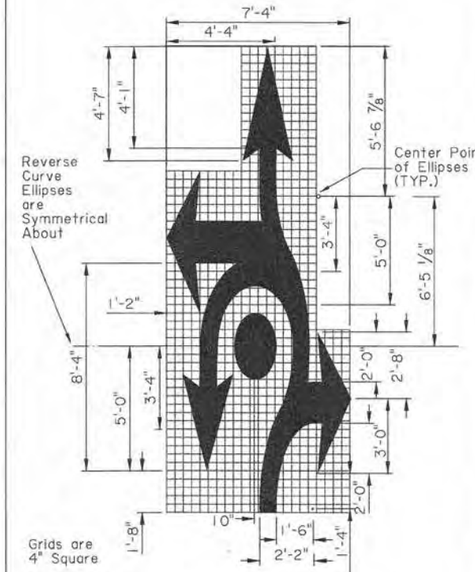

Grids are 4" Square

Assume Points Not Dimensioned to be Coincident with Grid Lines

Only Fishhook Combinations That Have Pay Items May Be Used.

Ⓔ INTERSTATE SHIELD for Non-Interstate Use

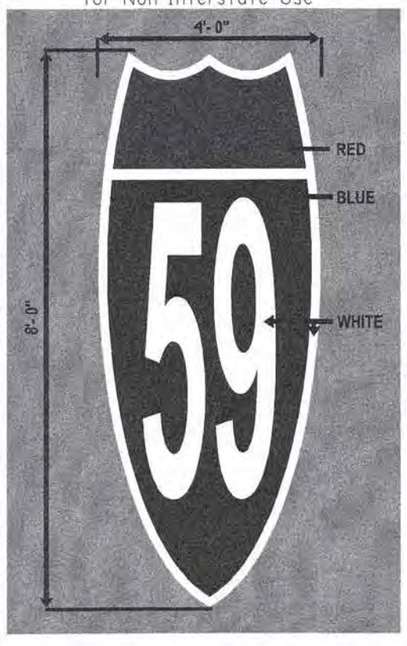

Ⓕ STATE HIGHWAY SHIELDS for Non-Interstate Use

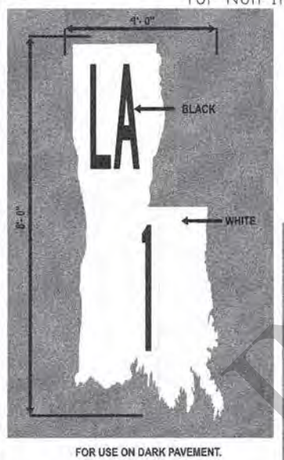

FOR USE ON DARK PAVEMENT.

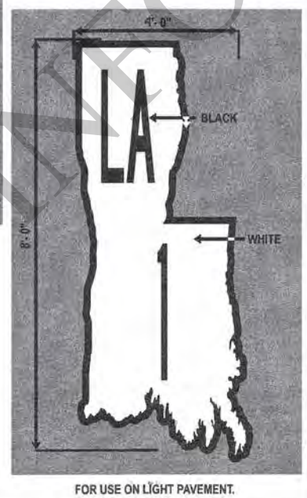

FOR USE ON LIGHT PAVEMENT.

Ⓖ STATE HIGHWAY SHIELDS for Non-Interstate Use

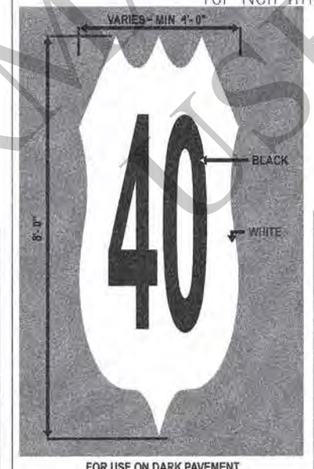

FOR USE ON DARK PAVEMENT.

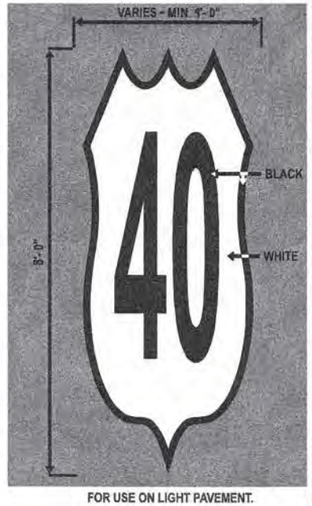

FOR USE ON LIGHT PAVEMENT.

Ⓗ RAILROAD CROSSING PAVEMENT MARKINGS

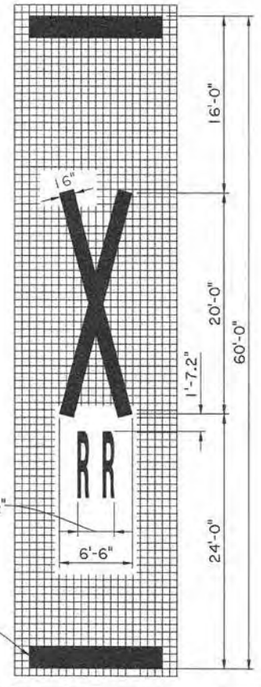

STATE OF LOUISIANA
GARY N. LeBLANC
REG. No. 28220
REGISTERED PROFESSIONAL ENGINEER IN CIVIL ENGINEERING

2-27-19

FOR INFORMATIONAL PURPOSES ONLY

SHEET NUMBER	
PARISH	
CONTROL SECTION	
STATE PROJECT	
DESIGNED G. LEBLANC	
CHECKED J. COLVIN	
DETAILED K. WILLIAMS	
CHECKED G. LEBLANC	
DATE	
SHEET	
DATE 2/28/19	

APPROVED BY CHIEF ENGINEER:

STATE OF LOUISIANA DEPARTMENT OF TRANSPORTATION AND DEVELOPMENT

PM-02
Pavement Word and Symbol Markings for Non-Interstate Use

PAVEMENT MARKING DETAILS

DOTD TRAFFIC ENGINEERING

IP_PWP:dms12298\PM-02.dgn

9/21/2020 09:52

Ⓐ EXIT ONLY WORD MARKING

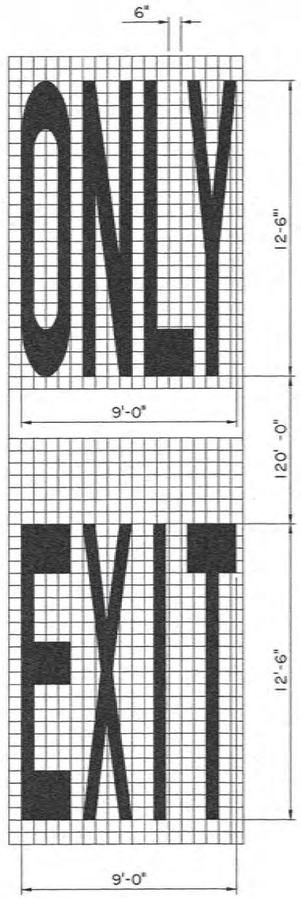

Ⓑ LANE REDUCTION ARROW

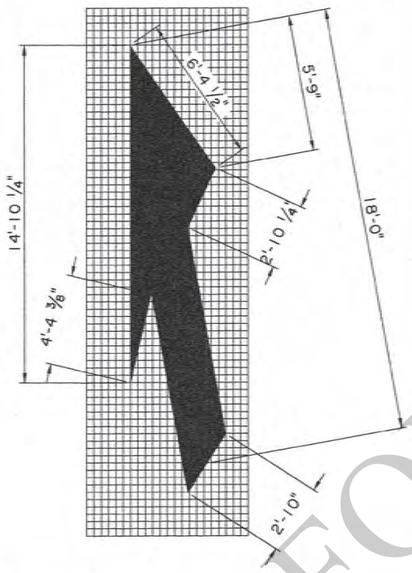

*For left lane reduction, use mirror image.

Ⓒ STATE HIGHWAY SHIELD
FOR INTERSTATE USE:

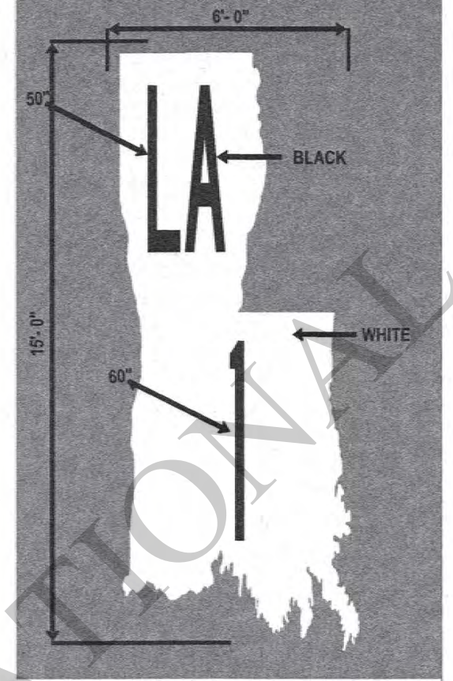

FOR USE ON DARK PAVEMENT.

Ⓓ INTERSTATE SHIELD
FOR INTERSTATE USE:

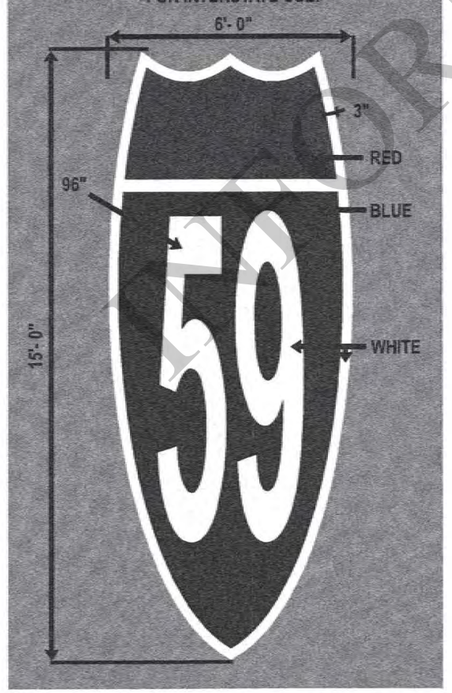

Ⓔ STATE HIGHWAY SHIELD
FOR INTERSTATE USE:
VARIES - MIN 6'-0"

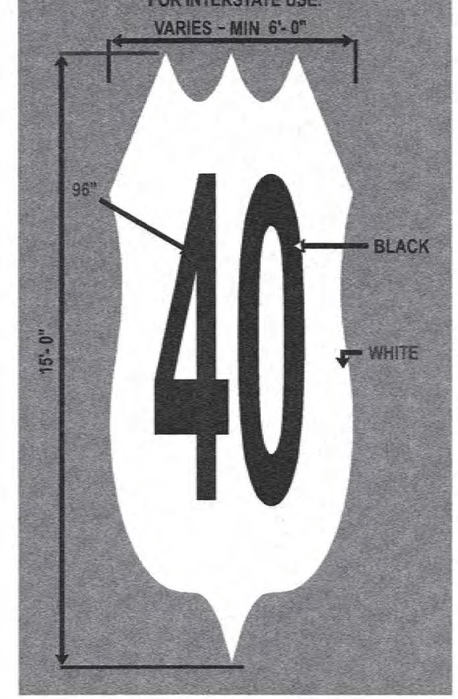

FOR USE ON DARK PAVEMENT.

STATE HIGHWAY SHIELD
FOR INTERSTATE USE:

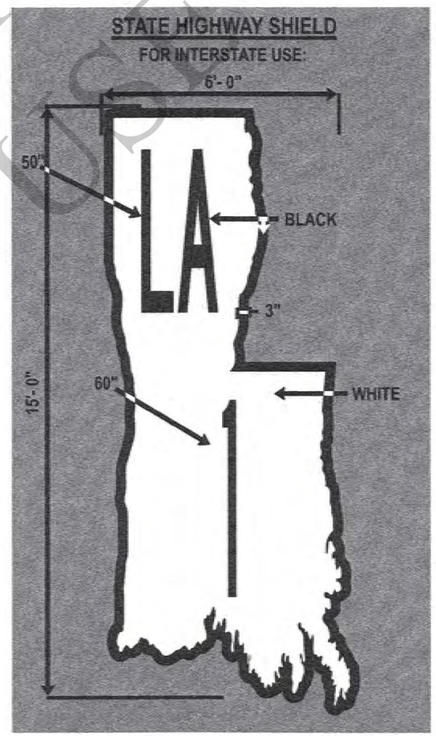

FOR USE ON LIGHT PAVEMENT.

VARIES - MIN 6'-0"

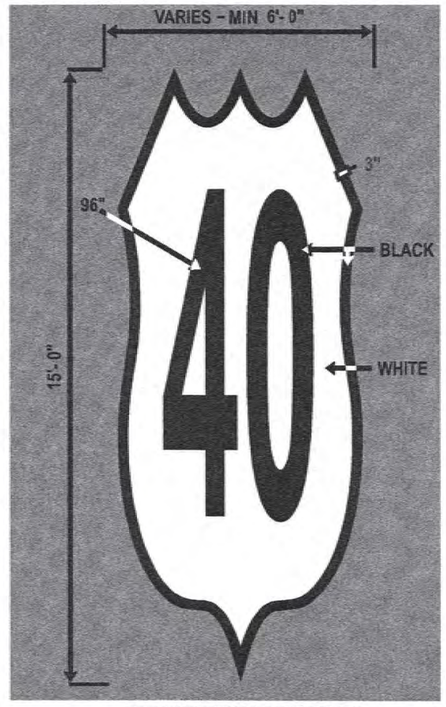

FOR USE ON LIGHT PAVEMENT.

FOR INFORMATIONAL USE

STATE OF LOUISIANA
GARY N. LeBLANC
REG. No. 28220
REGISTERED PROFESSIONAL ENGINEER
IN CIVIL ENGINEERING

2-27-19

SHEET NUMBER

PARISH | CONTROL SECTION | STATE PROJECT

DESIGNED G. LEBLANC
CHECKED J. COLVIN
DETAILED K. WILLIAMS
CHECKED G. LEBLANC
DATE
SHEET

DATE 2/28/19

APPROVED BY CHIEF ENGINEER:

STATE OF LOUISIANA

PM-03
Pavement Word and Symbol Markings for Interstate Use
PAVEMENT MARKING DETAILS

DOTD TRAFFIC ENGINEERING

IP_PWP:dms12298\PM-03.dgn

09:52
9/21/2020

Note:

⇨ indicates the direction of travel (not a pavement marker).

Ⓐ AUXILIARY LANE

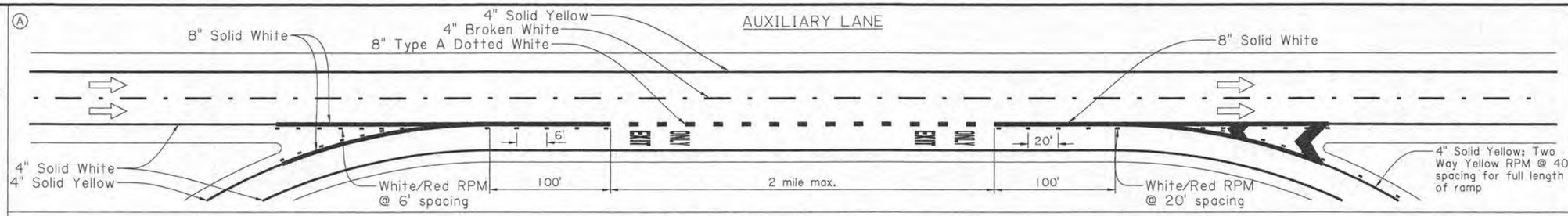

Ⓑ PARALLEL DECELERATION LANE

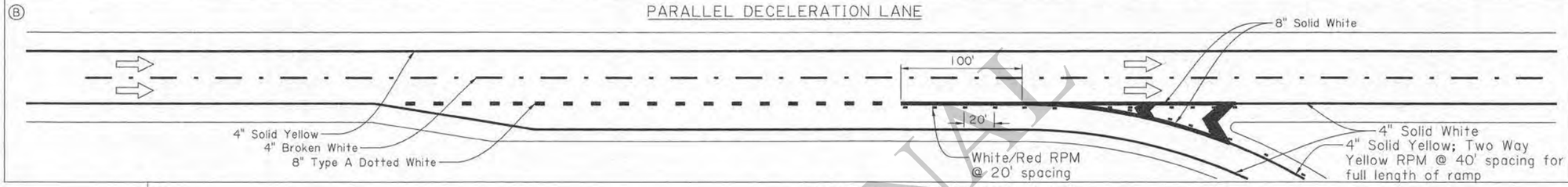

Ⓒ PARALLEL ACCELERATION LANE

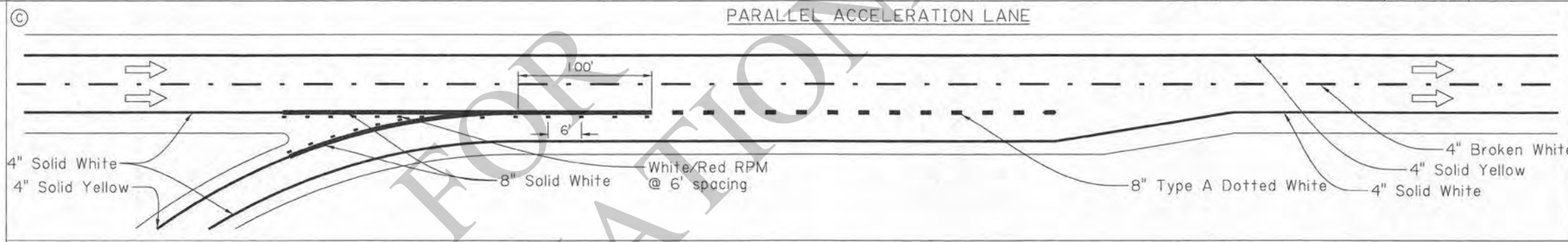

Ⓓ TAPERED ACCELERATION LANE

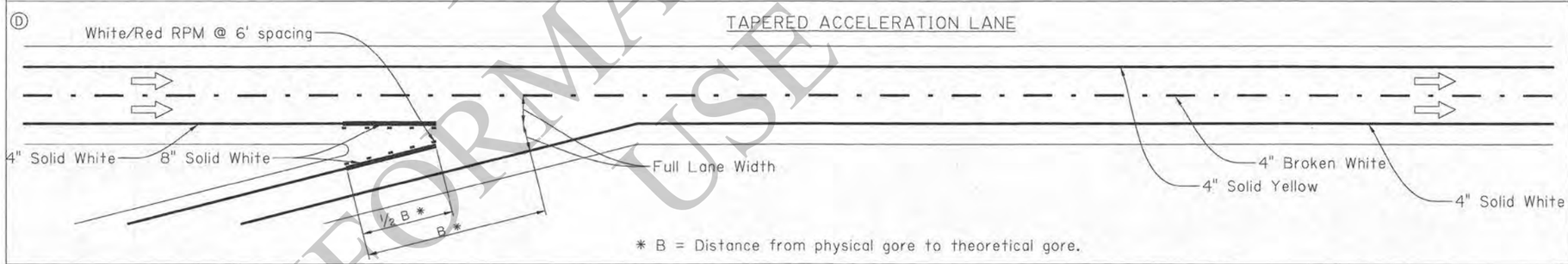

* B = Distance from physical gore to theoretical gore.

Ⓔ AUXILIARY LANE DROP

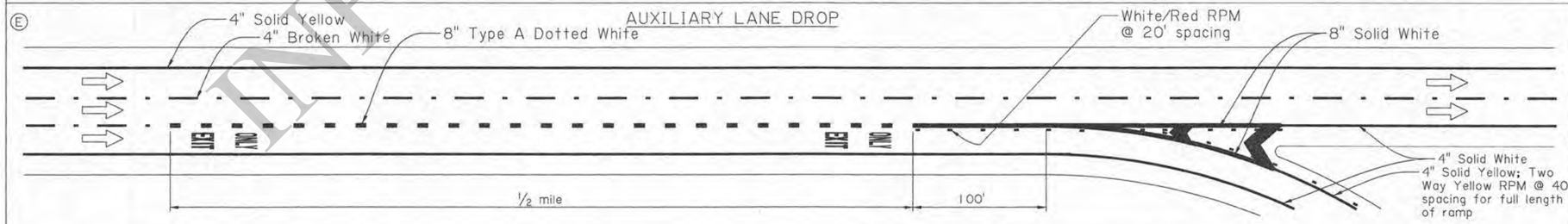

TYPICAL EXIT GORE MARKINGS

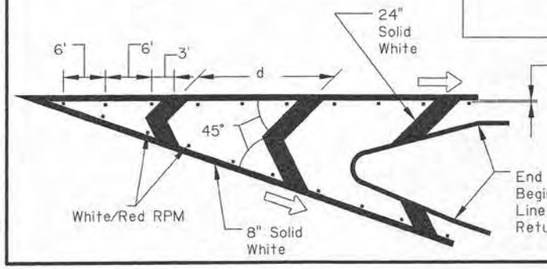

d	Mainline Speed
12'	45 MPH or Less
18'	50 or 55 MPH
24'	60 MPH or Above

FOR INFORMATIONAL USE

STATE OF LOUISIANA
GARY N. LeBLANC
REG No. 26220
REGISTERED PROFESSIONAL ENGINEER IN CIVIL ENGINEERING

2-27-19

SHEET NUMBER		
PARISH	CONTROL SECTION	STATE PROJECT
DESIGNED G. LEBLANC CHECKED J. COLVIN	DETAILED K. WILLIAMS CHECKED G. LEBLANC	DATE SHEET

DATE 2/28/19

APPROVED BY CHIEF ENGINEER: Christopher P. Knotts

PM-04

Auxiliary, Deceleration and Acceleration Lanes and Gore Striping Layouts

PAVEMENT MARKING DETAILS

DOTD TRAFFIC ENGINEERING

IP_PWP:dms12298\PM-04.dgn

9/21/2020 09:52

Ⓐ UNSIGNALIZED INTERSECTION ON TWO LANE ROADWAY

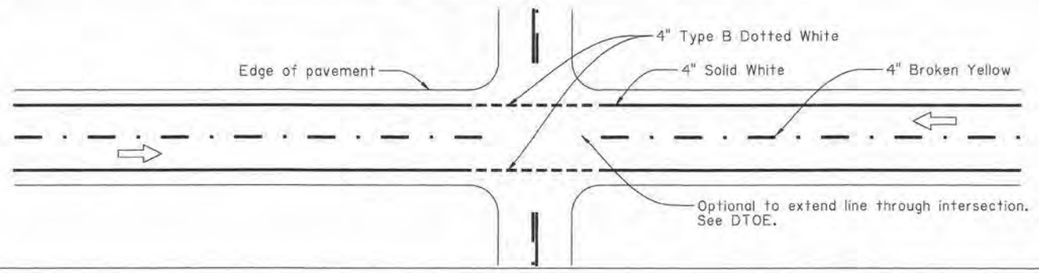

Ⓑ SIGNALIZED INTERSECTION ON TWO LANE ROADWAY

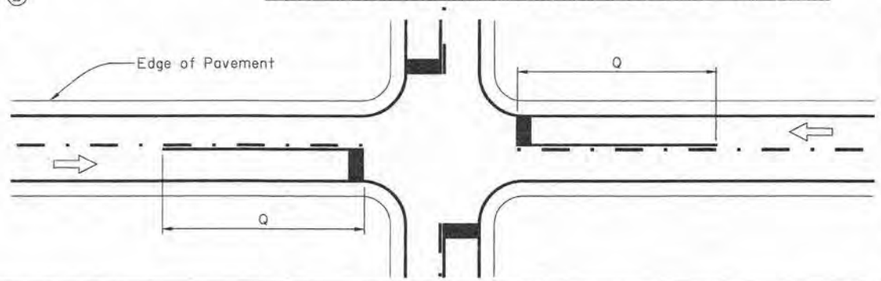

Speed Limit (mph)	Length Q (ft)
<40	100
40	125
45	175
50	250
55	325

Ⓒ UNSIGNALIZED APPROACH LEFT TURN LANE ON TWO LANE ROADWAY

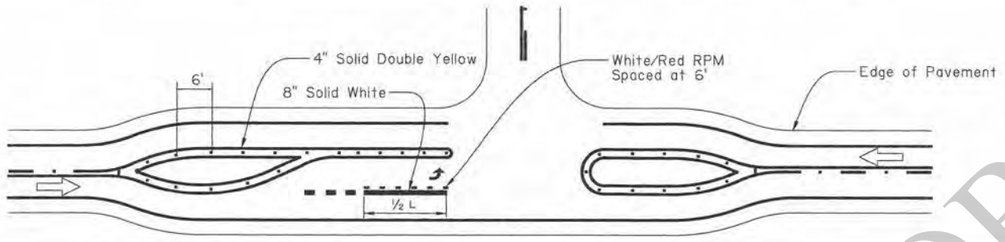

Ⓓ STOP OR SIGNALIZED APPROACH TURN LANE DETAILS

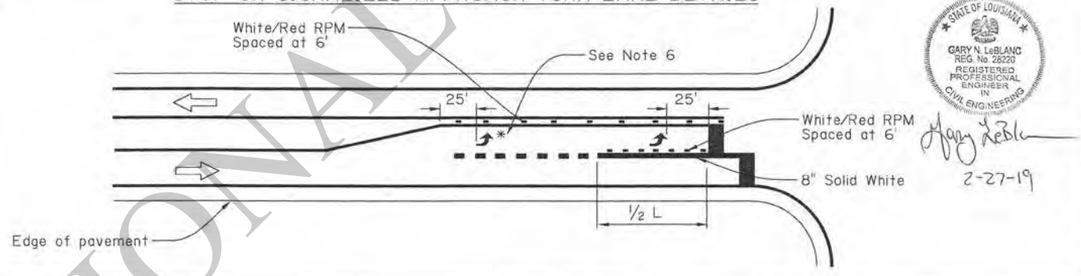

STATE OF LOUISIANA
GARY N. LeBLANC
REG. No. 28220
REGISTERED PROFESSIONAL ENGINEER IN CIVIL ENGINEERING

2-27-19

Ⓔ TWO-WAY TURN LANE DETAILS

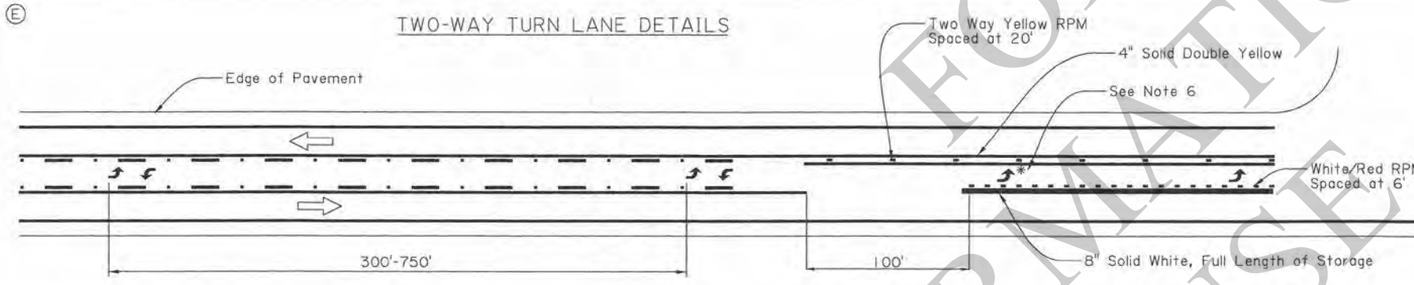

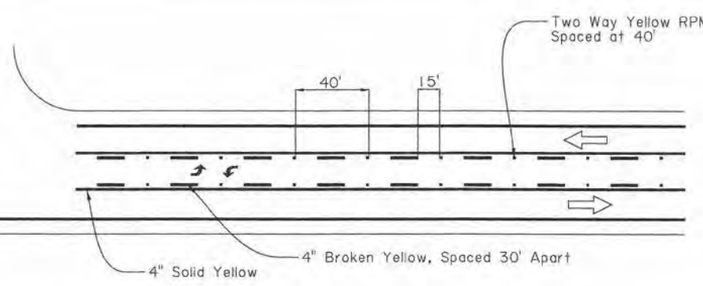

Ⓕ R-CUT DETAILS

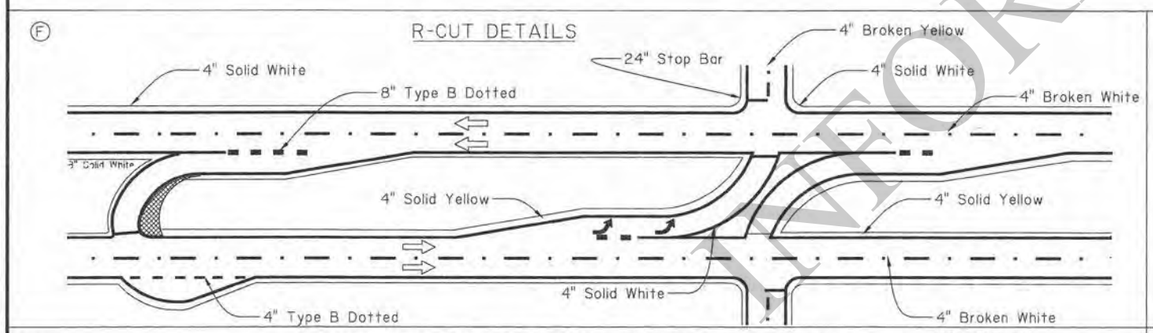

*See Note 6.

Ⓖ SIGNALIZED DUAL LEFT AND RIGHT TURN DETAILS

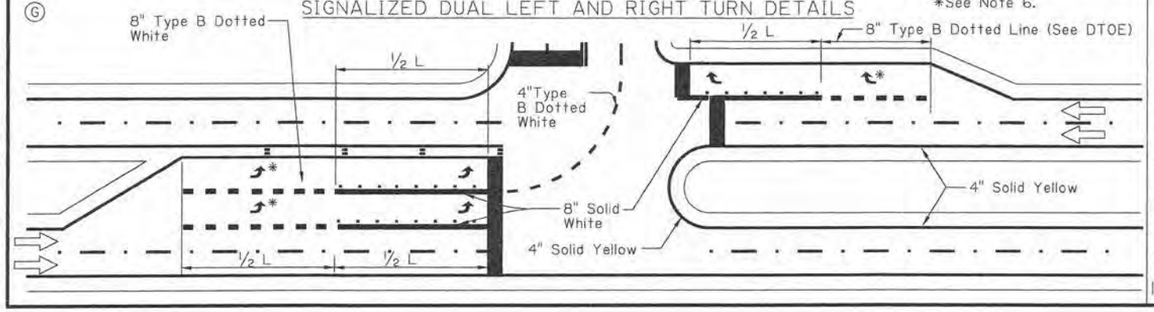

Ⓗ UNSIGNALIZED INTERSECTION ON A FOUR LANE UNDIVIDED ROADWAY

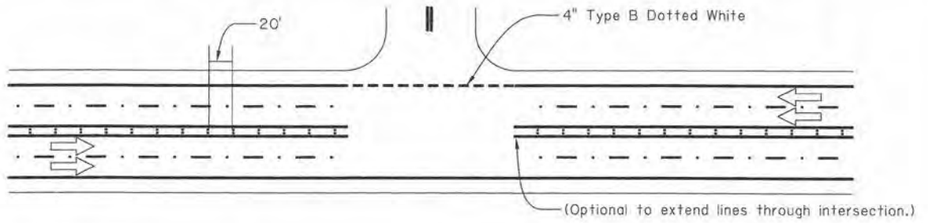

GENERAL NOTES:

1. If the minor street has edge lines, the edge lines on the major street shall wrap to meet the edge lines on the minor street.
2. Stop bars shall be 24". Stop bars shall not be placed at a distance greater than 30 feet or less than 4 feet from the nearest edge line. Stop bars at right turn lanes should be placed to provide adequate sight distance for right turning traffic.
3. The location of stop bars at left turn lanes should be determined by the turning radius needed by the side street vehicles.
4. See PM-01 for centerline and lane line details.
5. The ONLY word marking shall be used when a through lane terminates as a turn lane.
6. The asterisk (*) indicates that 2nd arrow is optional. If more than two arrows are used, minimum spacing should be 150'.
7. Edge lines should not be broken for driveways.
8. ⇨ indicates the direction of travel (not a pavement marker).
9. L equals the full length of turn lane.
10. Use of dotted lines require DTOE approval.

FOR INFORMATIONAL USE

DESIGNED	CHECKED	DETAILED	CHECKED	DATE	SHEET
G. LEBLANC	J. COLVIN	K. WILLIAMS	G. LEBLANC		

PARISH	CONTROL SECTION	STATE PROJECT

SHEET NUMBER

DATE 2/28/19

APPROVED BY CHIEF ENGINEER:

PM-05

Typical Intersection Striping Layouts

PAVEMENT MARKING DETAILS

DOTD TRAFFIC ENGINEERING

IP_PWP:dms12298\PM-05.dgn

9/21/2020 09:52

Ⓐ

TWO LANE TO FOUR LANE DIVIDED HIGHWAY

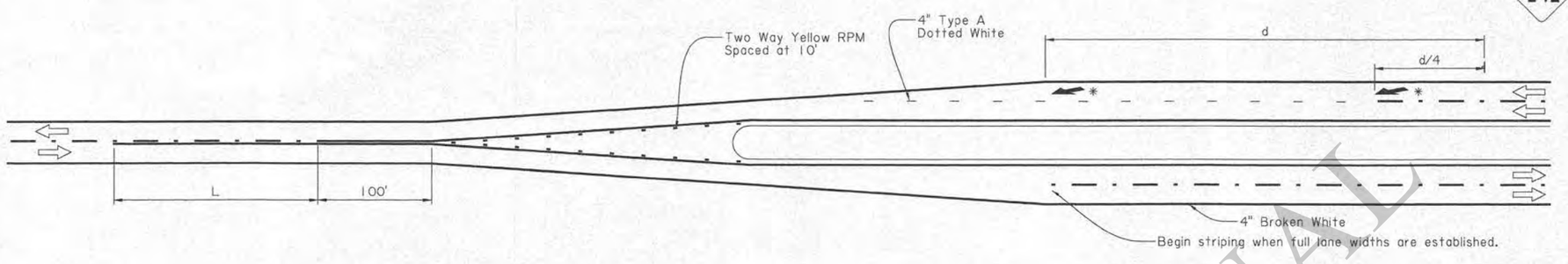

* No more than two reduction arrows shall be used per lane reduction.

85th Percentile or Speed Limit (mph)	Length of No Passing Minimum (L in feet)
25	100
30	100
35	100
40	125
45	175
50	250
55	325
60	400
65	475
70	550

Ⓑ

TWO LANE TO FOUR LANE UNDIVIDED HIGHWAY

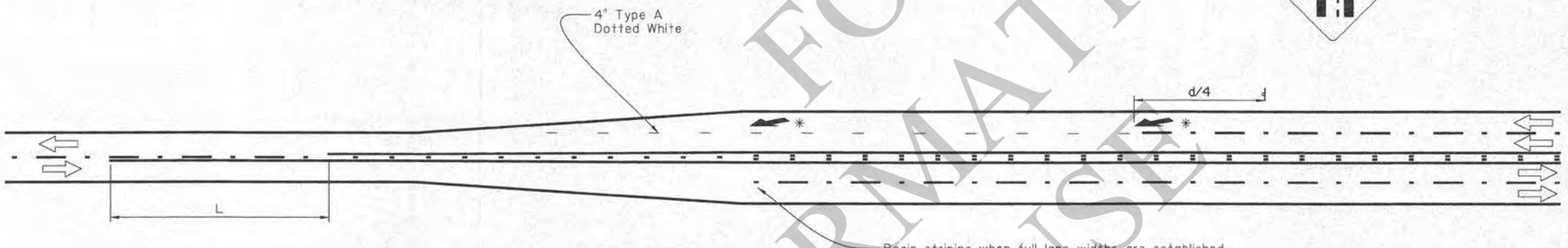

* No more than two reduction arrows shall be used per lane reduction.

85th Percentile or Speed Limit (mph)	Distance, d (ft)
20	225
25	325
30	460
35	565
40	670
45	775
50	885
55	990
60	1100
65	1200
70	1250

Ⓒ

ISLAND MARKINGS

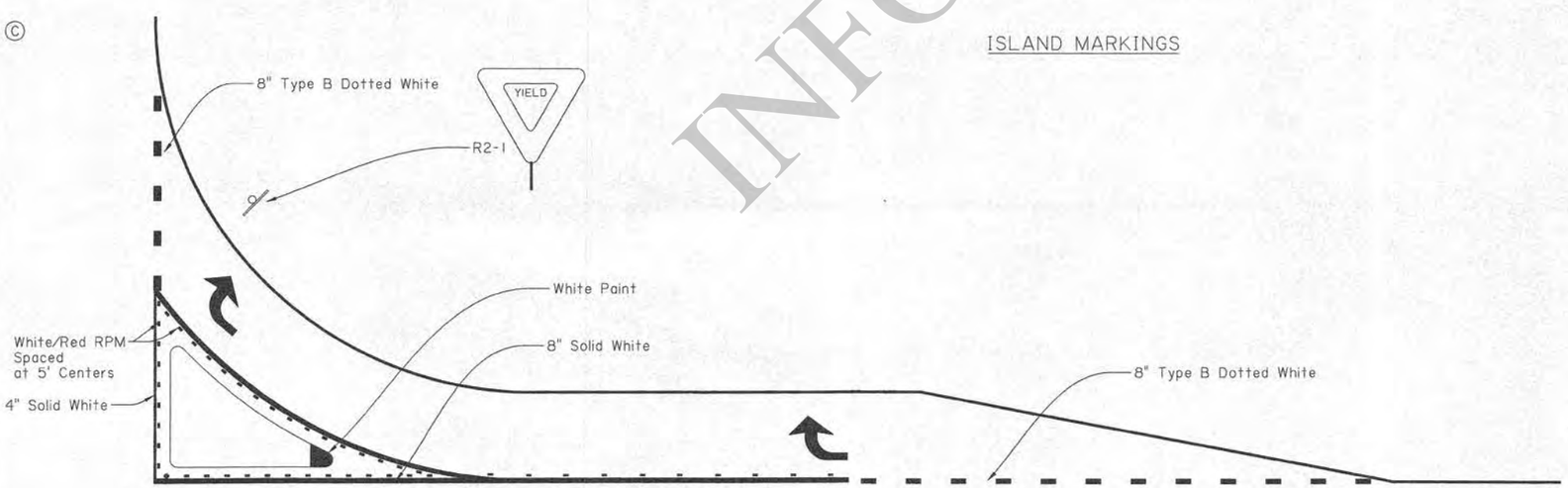

General Notes:

1. ⇨ indicates direction of travel (not a pavement marker).
2. See PM-01 for centerline and lane line details.
3. All dotted lines are optional with DTOE Approval.
4. White paint for island marking shall be a minimum of 2' width or as directed by DTOE.

STATE OF LOUISIANA
GARY N. LeBLANC
REG. No. 28228
REGISTERED PROFESSIONAL ENGINEER IN CIVIL ENGINEERING

2-27-19

FOR INFORMATIONAL USE

SHEET NUMBER

PARISH	CONTROL SECTION	STATE PROJECT

DESIGNED / CHECKED	DETAILED / CHECKED	DATE / SHEET
G. LEBLANC / J. COLVIN	K. WILLIAMS / G. LEBLANC	

DATE 8/28/19

APPROVED BY CHIEF ENGINEER:

PM-06

Lane Reduction and Island Layouts

PAVEMENT MARKING DETAILS

DOTD TRAFFIC ENGINEERING

IP_PWP:dms12298\PM-06.dgn

9/21/2020 09:53

TWO-LANE ROADWAY

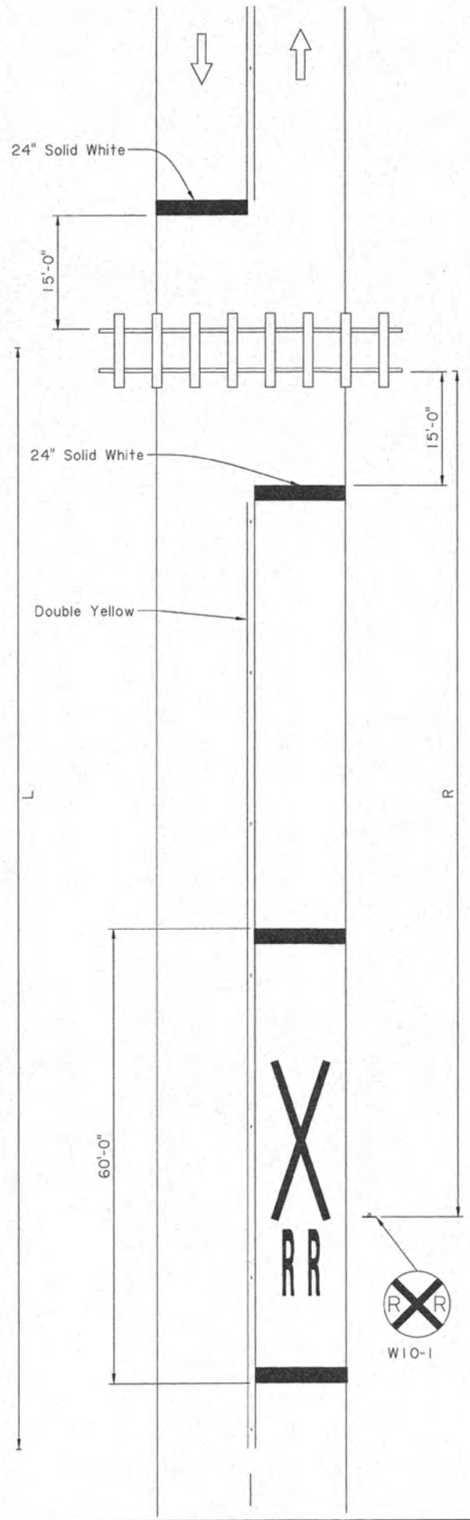

THREE-LANE ROADWAY

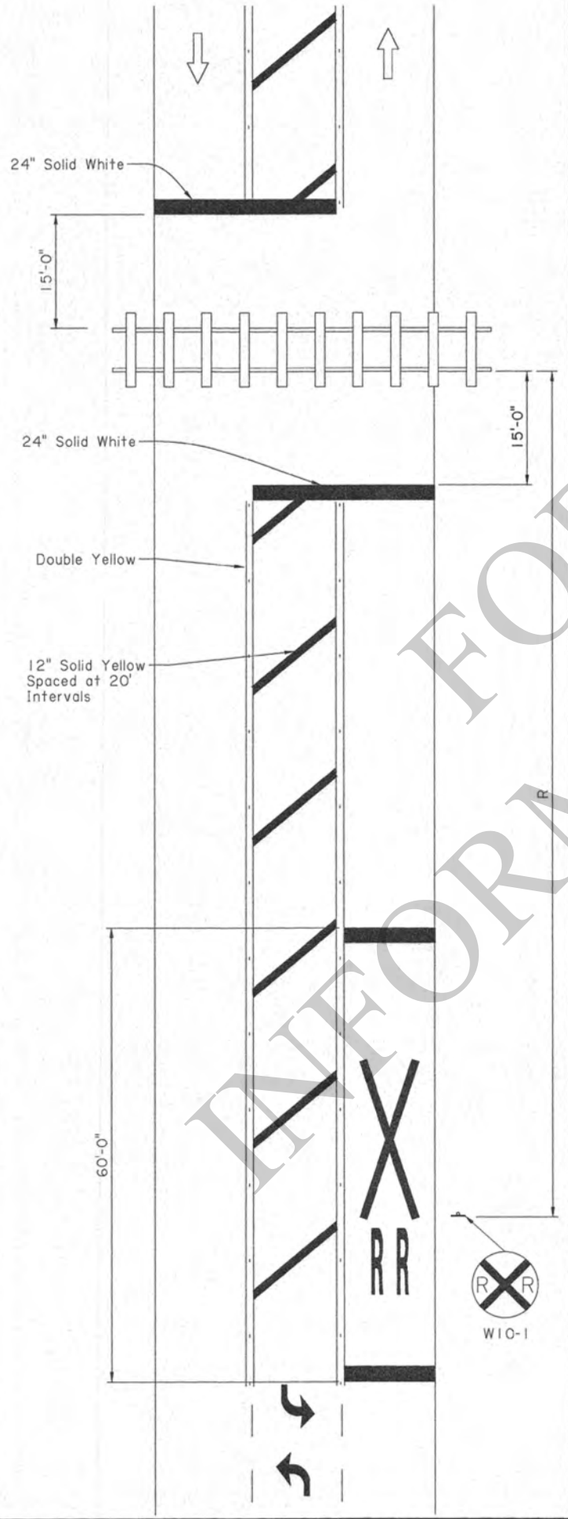

FOUR-LANE ROADWAY

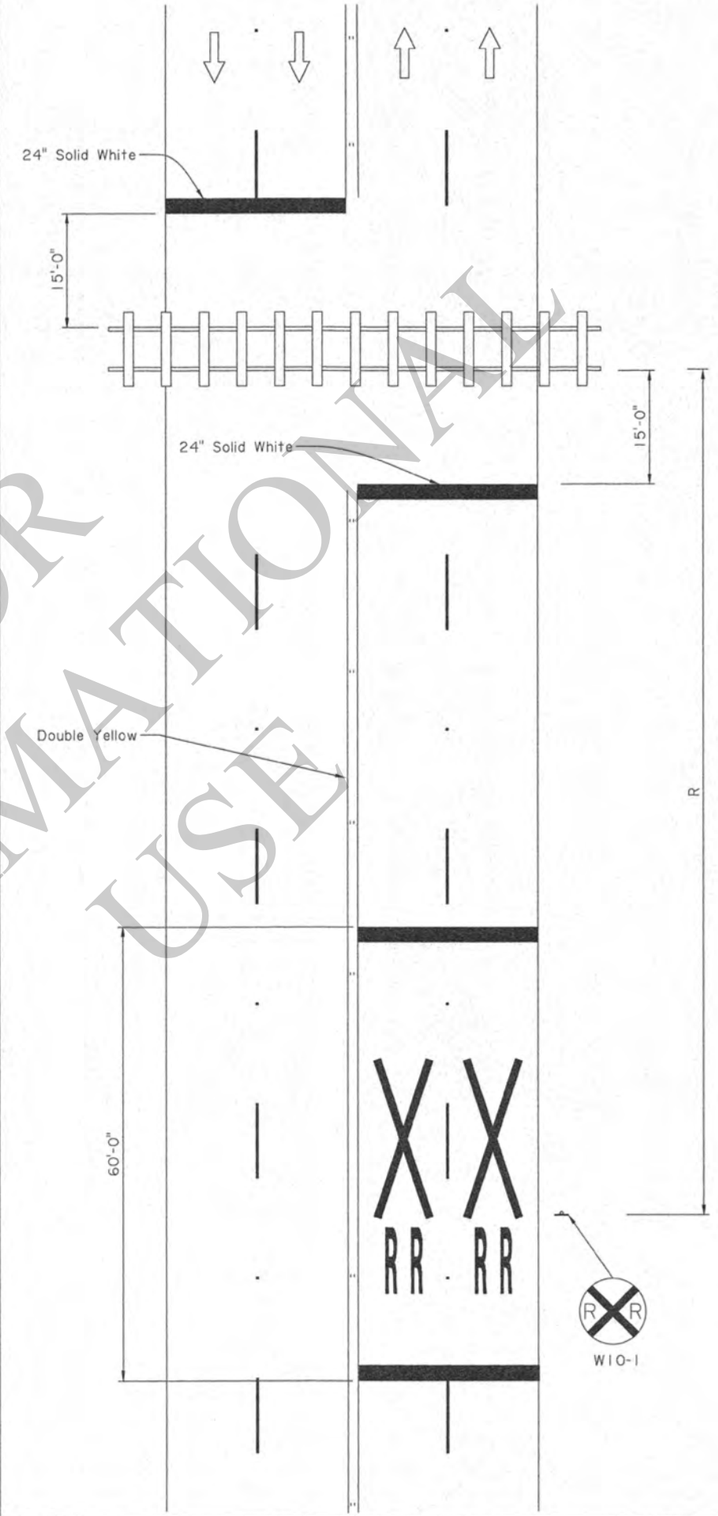

85th Percentile Speed or Design Speed (mph)	Length of No Passing Zone (L)
25	285'
30	315'
35	335'
40	360'
45	410'
50	460'
≥55	560'

85th Percentile Speed or Posted Speed (mph)	Advanced Placement of Warning Sign (R)
20	100'
25	100'
30	100'
35	100'
40	125'
45	175'
50	250'
55	325'
60	400'
65	475'

Notes:

1. ⇨ indicates the direction of travel (not a pavement marker).
2. No Passing Zone is measured from center of tracks.

STATE OF LOUISIANA
GARY N. LeBLANC
REG. No. 28220
REGISTERED PROFESSIONAL ENGINEER IN CIVIL ENGINEERING
2-27-19

FOR INFORMATIONAL USE

SHEET NUMBER

PARISH	CONTROL SECTION	STATE PROJECT

DESIGNED / CHECKED	DETAILED / CHECKED	DATE / SHEET
G. LEBLANC / J. COLVIN	K. WILLIAMS / G. LEBLANC	

DATE 2/28/19

APPROVED BY CHIEF ENGINEER:

STATE OF LOUISIANA

PM-07

Railroad Crossing Layout

PAVEMENT MARKING DETAILS

DOTD

TRAFFIC ENGINEERING

IP_PWP:dms12298\PM-07.dgn

9/21/2020 09:53
11:15
IP_PWP:dms12298\PM-08.dgn

Ⓐ

CROSSWALK MARKINGS AT SIGNALIZED INTERSECTION

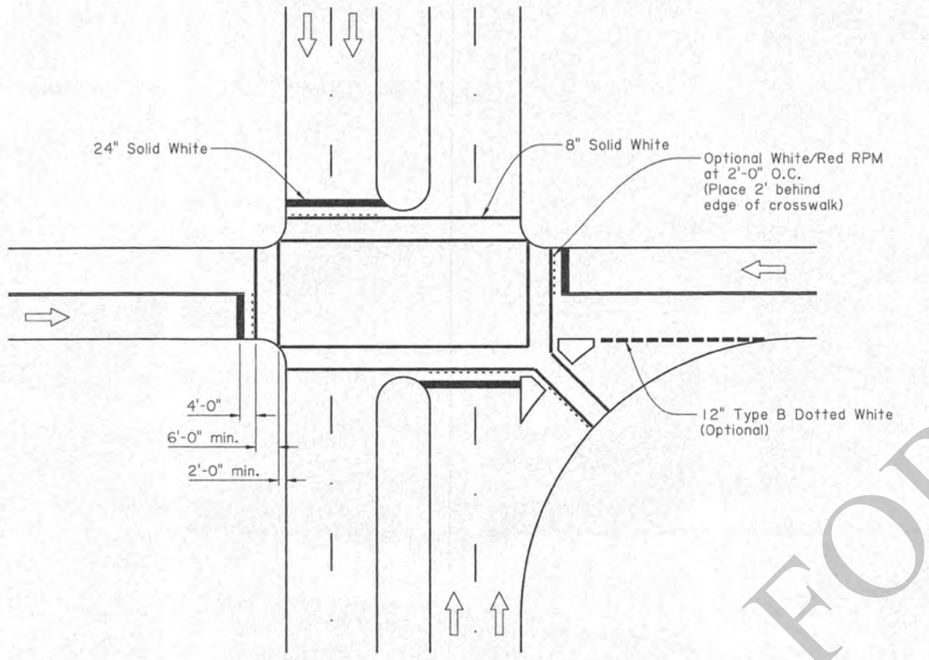

Ⓑ

CROSSWALK MARKINGS AT UNSIGNALIZED INTERSECTION

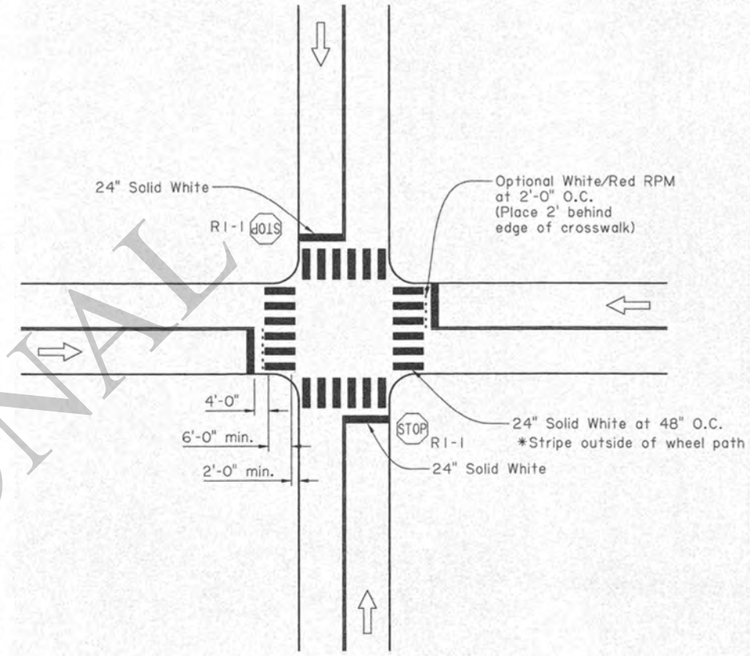

Ⓒ

MID-BLOCK CROSSWALK MARKINGS

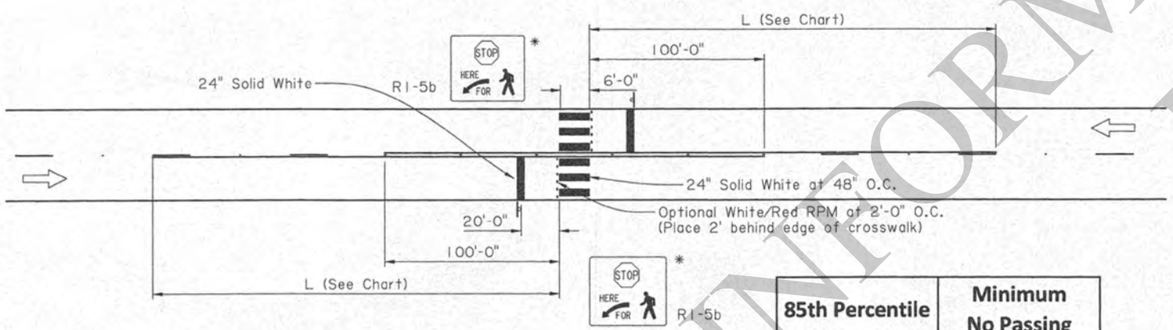

85th Percentile or Speed Limit (mph)	Minimum No Passing on Approach (L in feet)
25	100
30	100
35	100
40	125
45	175
50	250
55	325
60	400
65	475
70	550

*If within a school zone, sign may be changed to the In Street Schoolchildren Crossing (R1-6c) sign.

Ⓓ

BIKE LANE AT INTERSECTION WITH RIGHT TURN LANE

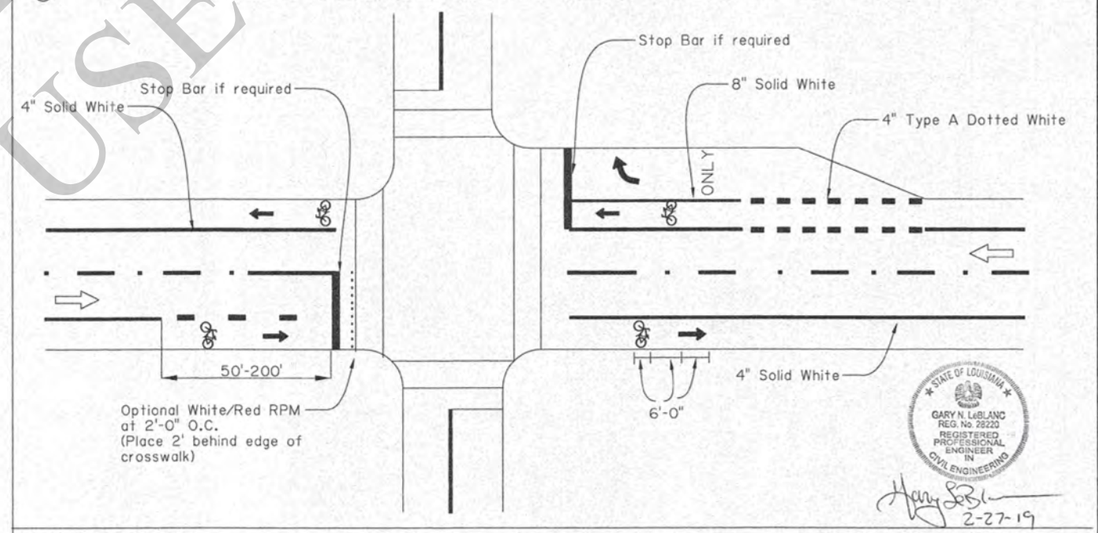

GENERAL NOTES:

1. All new and existing crosswalk placement shall require approval by the DTOE and justification through an engineering study.
2. If the width of the existing sidewalk is greater than 6 feet, the width of the crosswalk should match the width of the sidewalk.
3. ⇨ indicates direction of travel (not a pavement marker).
4. Bicycle pavement markings should be placed at the beginning of bike lanes, before and after each intersection with a minimum spacing of 100 ft in urban areas to a maximum of 1000 feet in suburban areas.

FOR INFORMATIONAL USE

SHEET NUMBER

PARISH	CONTROL SECTION	STATE PROJECT

DESIGNED G. LEBLANC CHECKED J. COLVIN	DETAILED K. WILLIAMS CHECKED G. LEBLANC	DATE 4/28/19 SHEET

APPROVED BY CHIEF ENGINEER:

PM-08

Pedestrian/Bike Striping Layout

PAVEMENT MARKING DETAILS

TRAFFIC ENGINEERING

9/21/2020 09:53

(A) ONE-LANE ROUNDABOUT

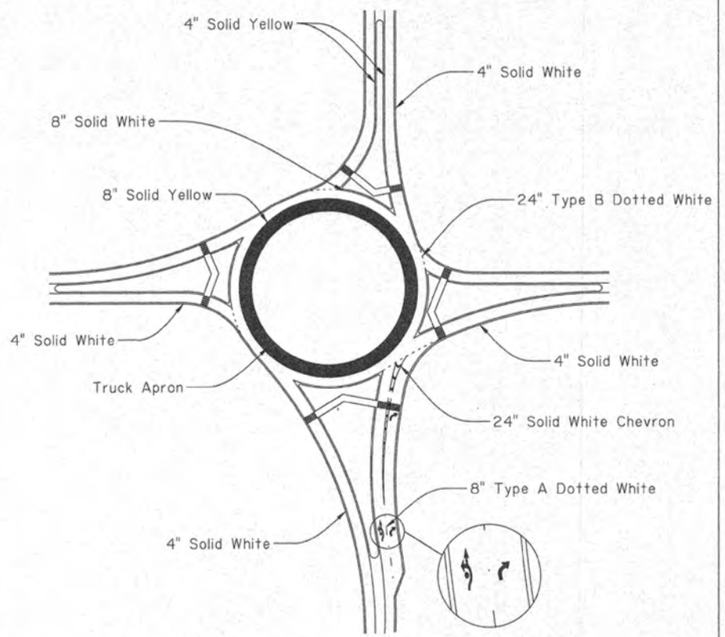

Note: No arrow pavement markings are to be used on single lane approaches.

(B) TWO-LANE ROUNDABOUT WITH ONE AND TWO LANE APPROACHES

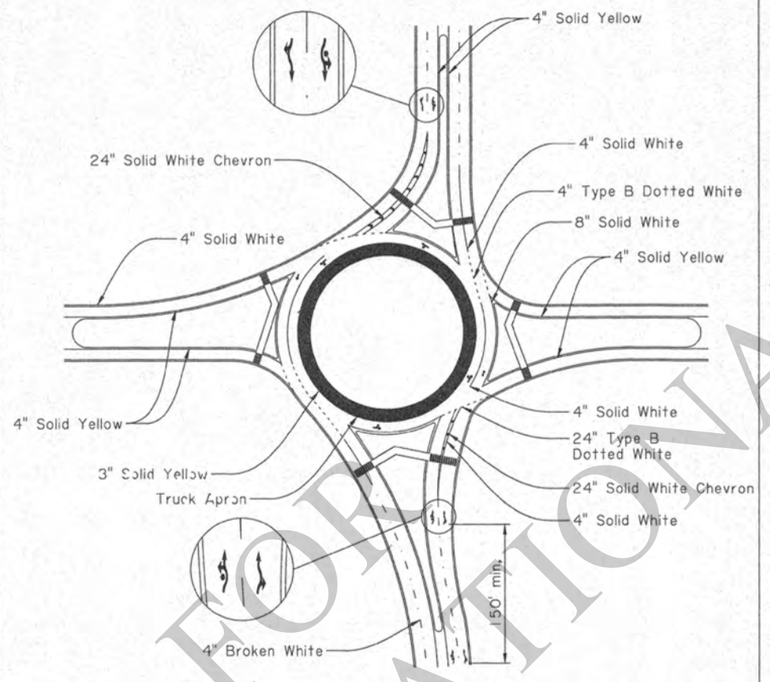

(C) TWO-LANE ROUNDABOUT

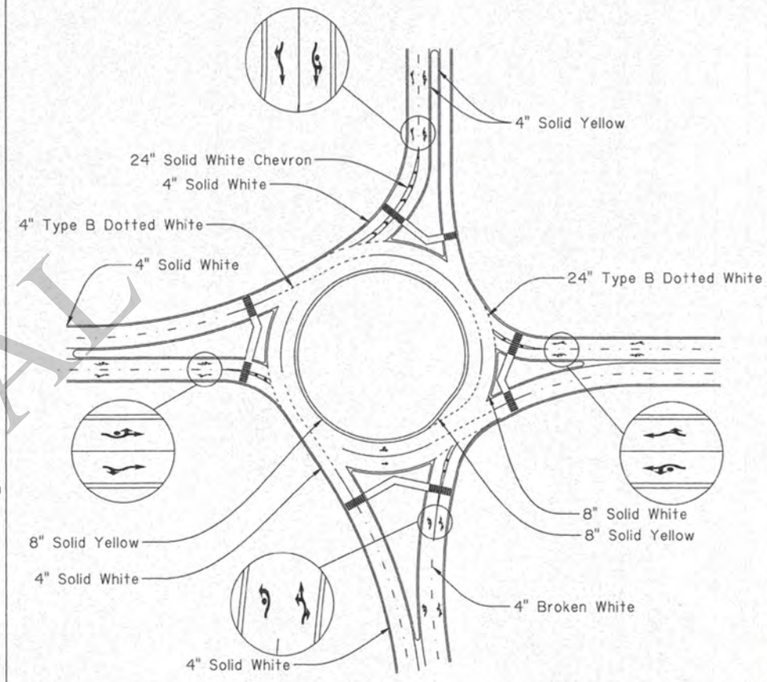

(D) APPROACH DETAILS

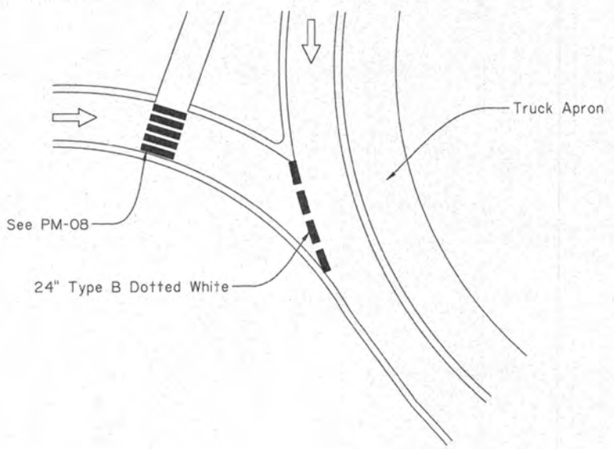

Note: ⇨ indicates direction of travel (not a pavement marker).

(E) COMPONENT KEY

The labeled areas above correspond to the portions needed for each type of roundabout traffic arrow.

"C" should only be used in the inside lane.

GENERAL NOTES:

1. Each roundabout approach shall have two sets of arrows. The first set shall be located at the guide sign. The second set shall be located at the theoretical gore of the splitter island.
2. Crosswalks shall be placed a minimum of 20 feet from the edge line of the circulatory roadway. See PM-08 for crosswalk details.
3. See PM-02 for fishhook details.
4. See PM-06 for island details.

STATE OF LOUISIANA
GARY N. LeBLANC
REG. No. 28220
REGISTERED PROFESSIONAL ENGINEER IN CIVIL ENGINEERING

2-27-19

FOR INFORMATIONAL USE

SHEET NUMBER		
PARISH	CONTROL SECTION	STATE PROJECT
DESIGNED G. LEBLANC CHECKED J. COLVIN	DETAILED K. WILLIAMS CHECKED G. LEBLANC	DATE SHEET

DATE 2/28/19

APPROVED BY CHIEF ENGINEER:

PM-09

Roundabout Striping Layout

PAVEMENT MARKING DETAILS

DOTD TRAFFIC ENGINEERING

(A) CENTERLINE OF TWO-LANE ROADWAY WITH TWO-WAY TRAFFIC

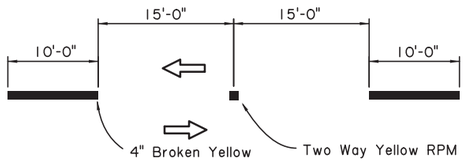

(B) LANE LINE BETWEEN LANES OF TRAFFIC TRAVELING IN THE SAME DIRECTION

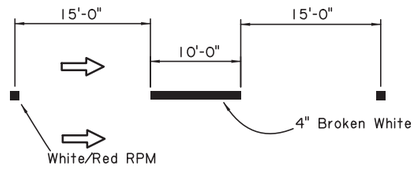

(C) CENTERLINE OF MULTI-LANE UNDIVIDED ROADWAY

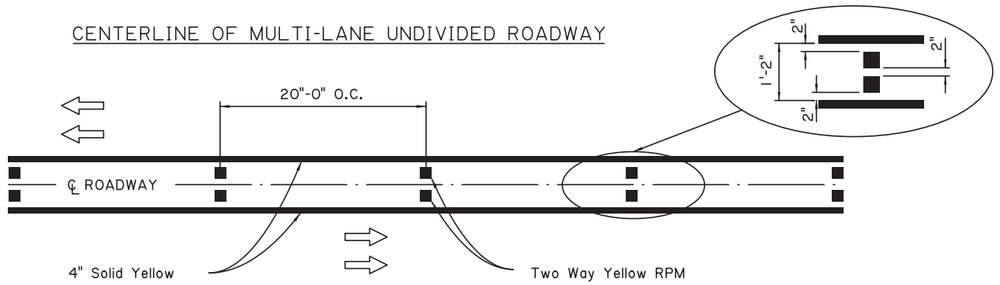

(D) CONTRAST LANE LINES BETWEEN LANES ON PORTLAND CEMENT CONCRETE ADT ≥ 80,000

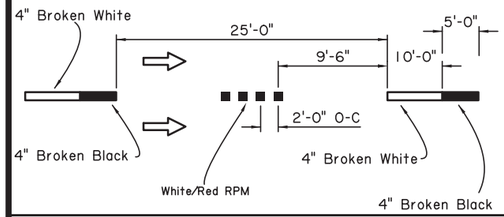

(E) CONTRAST LANE LINES BETWEEN LANES ON PORTLAND CEMENT CONCRETE ADT < 80,000

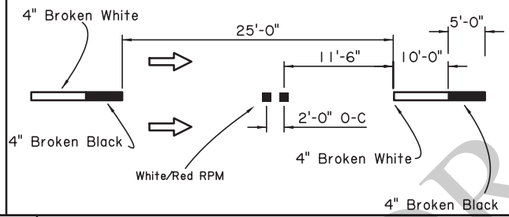

(F) ARTERIAL/ FREEWAY CONTRAST LANE LINES BETWEEN LANES ON PORTLAND CEMENT CONCRETE ADT ≥ 80,000

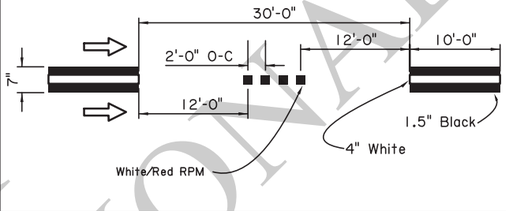

(G) ARTERIAL/ FREEWAY CONTRAST LANE LINES BETWEEN LANES ON PORTLAND CEMENT CONCRETE ADT < 80,000

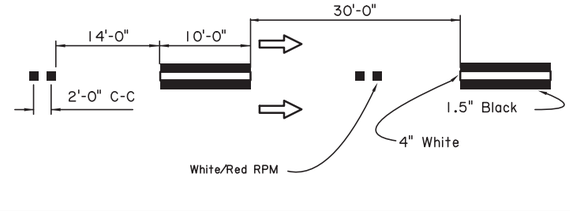

(H) ARTERIAL/ FREEWAY LANE LINES BETWEEN LANES ON ASPHALT CONCRETE WITH ADT ≥ 80,000

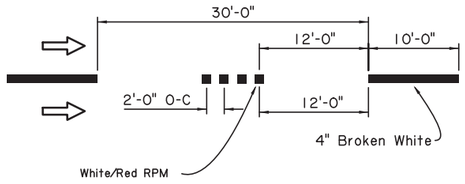

(I) CENTERLINE OF TWO-LANE ROADWAY WITH TWO-WAY TRAFFIC WITH PASSING RESTRICTIONS

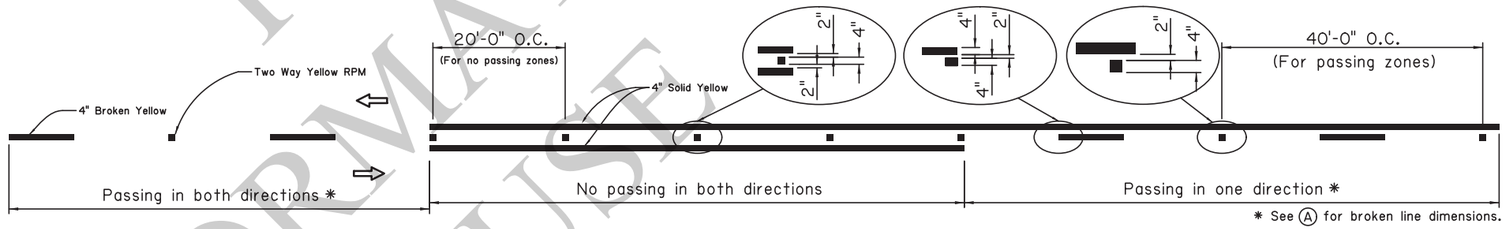

(J) ARTERIAL/ FREEWAY LANE LINES BETWEEN LANES ON ASPHALT CONCRETE WITH ADT < 80,000

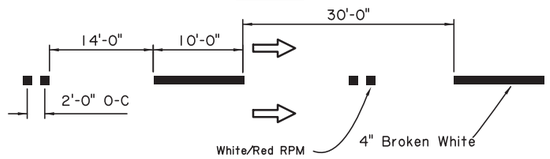

(K) TYPE A DOTTED

Used for entrance, exit and auxiliary lanes, and lane drop markings and shared use bicycle paths.

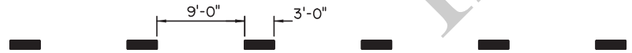

Note: Width and color shall match line extending unless otherwise noted.

(L) TYPE B DOTTED

Used for lane line extensions through intersections, turn lane taper markings, edge line extensions and bulb outs.

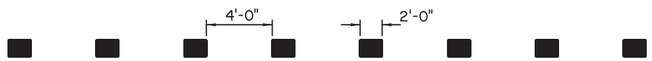

Note: Width and color shall match line extending unless otherwise noted.

GENERAL NOTES:

1. 4" Edge lines shall be placed on all roadways.
2. Place edge lines, centerlines and lane lines to avoid longitudinal joints as directed by the project engineer.
3. Edge lines in a curb and gutter section should be kept out of the gutter and clear from debris.
4. If rumble strips are used, striping details remain unchanged.
5. Centerlines shall be placed on roadways with a traveled way width of 16 feet or greater.
6. Where the clear width of a bridge is less than the clear width of the roadway, reflectorized pavement markers shall be placed adjacent to the edge line at 20' centers.
7. ⇨ indicates the direction of travel (not a pavement marker).
8. For non-interstate striping, use one Raised Reflectorized Pavement Marker.
9. White Reflectorized Pavement Marker faces same direction traffic and red faces opposing traffic.

FOR INFORMATIONAL USE

SHEET NUMBER

PARISH	CONTROL SECTION	STATE PROJECT

DESIGN	B. MASON	DETAIL	B. MASON	REVIEW	SERIES #
CHECK	B. BOUCHER	CHECK	B. BOUCHER		

APPROVED BY CHIEF ENGINEER: DATE: 3/6/2026

NO.	DATE	REVISION OR CHANGE ORDER DESCRIPTION	BY

PAVEMENT MARKING DETAILS
Centerline and Edgeline Markings

PM-01

DOTD LOUISIANA DEPARTMENT OF TRANSPORTATION & DEVELOPMENT

STANDARD PLAN

Ⓐ TURN ARROW AND ONLY WORD MARKING

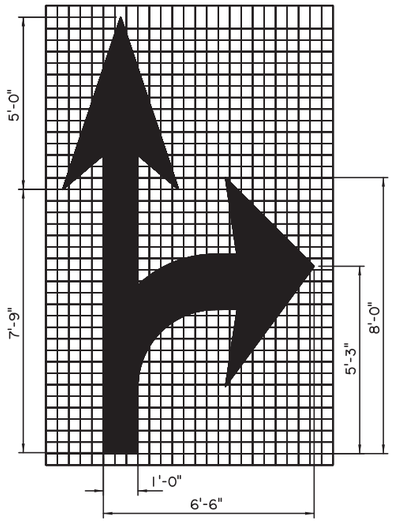

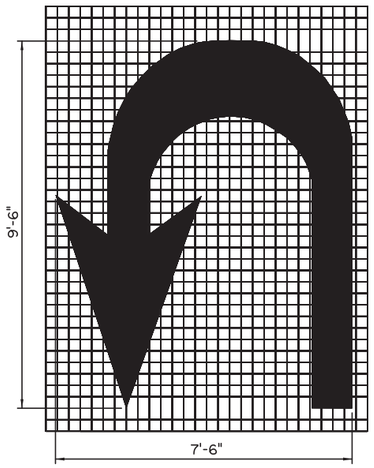

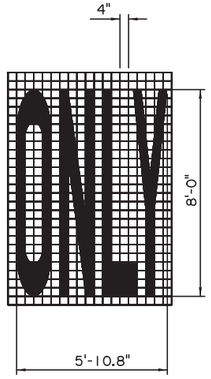

*For left turn arrow, use mirror image.

Ⓑ BIKE SYMBOL

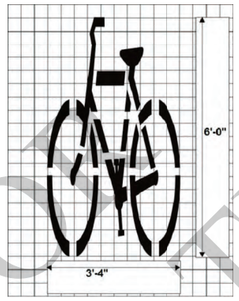

Ⓒ LANE REDUCTION ARROW

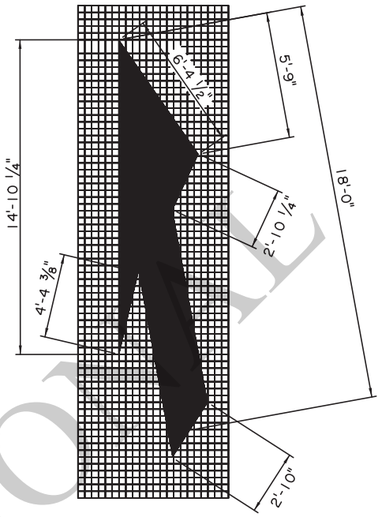

*For left lane reduction, use mirror image.

Ⓓ DIRECTIONAL ARROWS FOR ROUNDABOUTS (FISHHOOK)

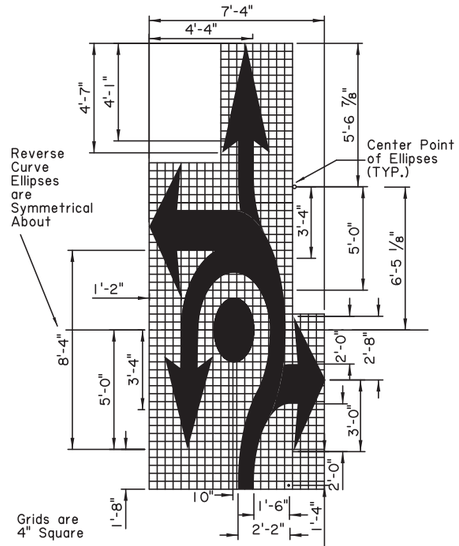

Ⓔ INTERSTATE SHIELD for Non-Interstate Use

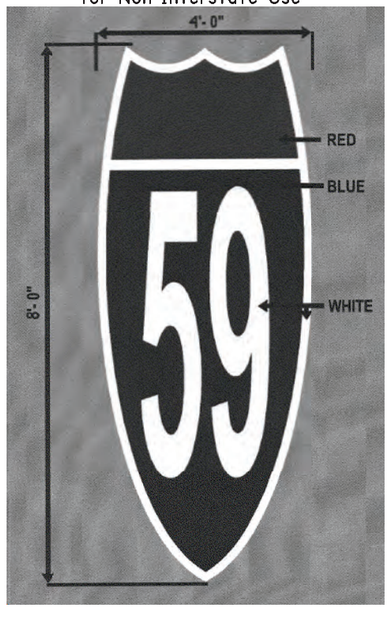

Ⓕ STATE HIGHWAY SHIELDS for Non-Interstate Use

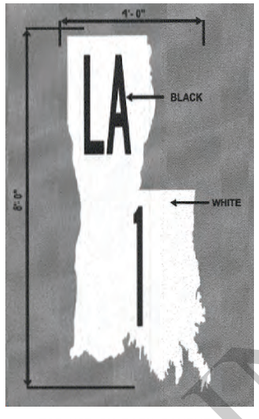

FOR USE ON DARK PAVEMENT.

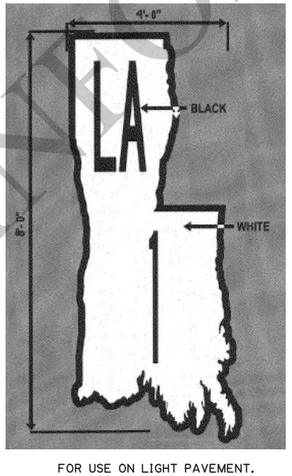

FOR USE ON LIGHT PAVEMENT.

Ⓖ US HIGHWAY SHIELDS for Non-Interstate Use

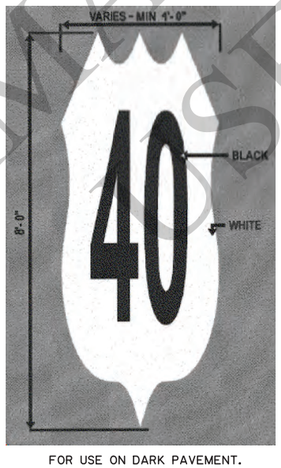

FOR USE ON DARK PAVEMENT.

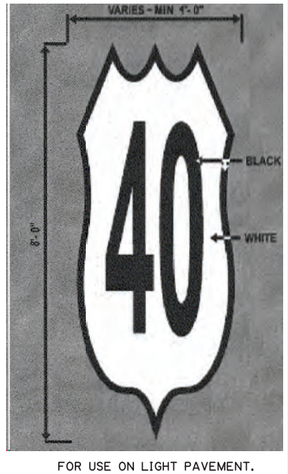

FOR USE ON LIGHT PAVEMENT.

Ⓗ RAILROAD CROSSING PAVEMENT MARKINGS

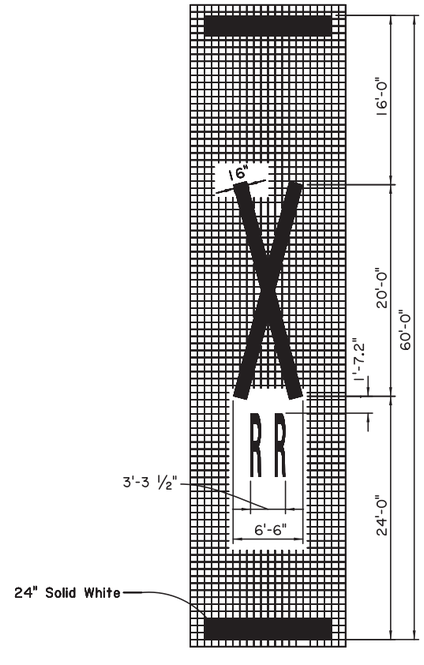

INFORMATIONAL PURPOSE

SHEET NUMBER

PARISH	CONTROL SECTION	STATE PROJECT

DESIGN	B. MASON	DETAIL	B. MASON	REVIEW	SERIES #
CHECK	B. BOUCHER	CHECK	B. BOUCHER		

APPROVED BY CHIEF ENGINEER:

DATE: 3/6/2026

NO.	DATE	REVISION OR CHANGE ORDER DESCRIPTION	BY

PAVEMENT MARKING DETAILS

Pavement Word and Symbol Markings for Non-Interstate Use

PM-02

DOTD LOUISIANA DEPARTMENT OF TRANSPORTATION & DEVELOPMENT

STANDARD PLAN

Ⓐ

EXIT ONLY WORD MARKING

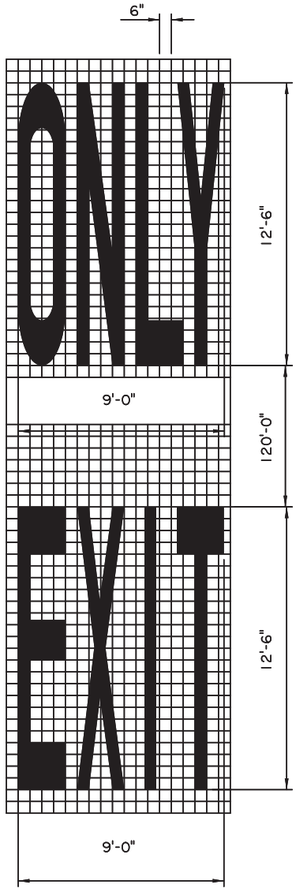

Ⓑ

LANE REDUCTION ARROW

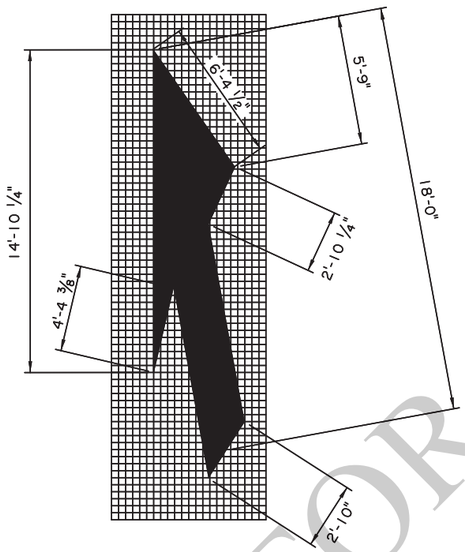

*For left lane reduction, use mirror image.

Ⓒ

STATE HIGHWAY SHIELDS
for Interstate Use

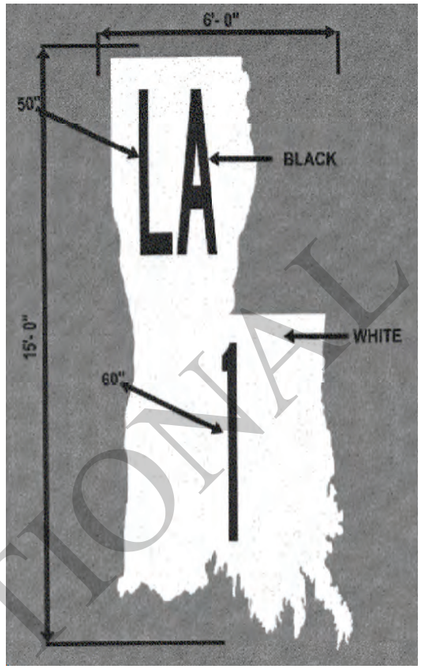

FOR USE ON DARK PAVEMENT.

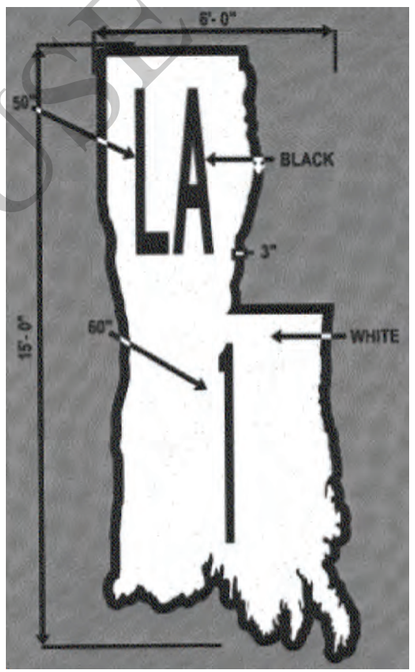

FOR USE ON LIGHT PAVEMENT.

Ⓔ

US HIGHWAY SHIELDS
for Interstate Use

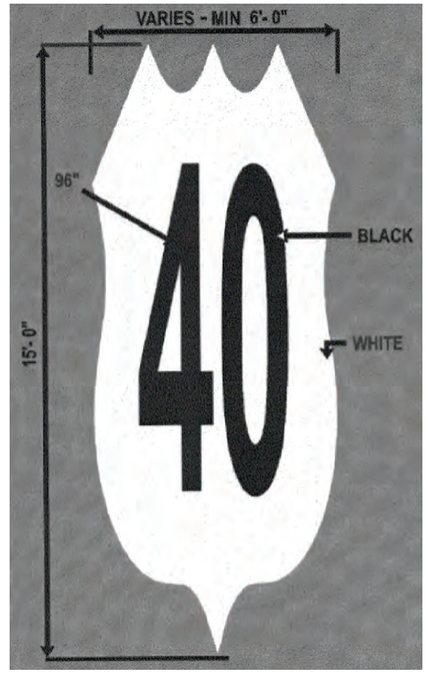

FOR USE ON DARK PAVEMENT.

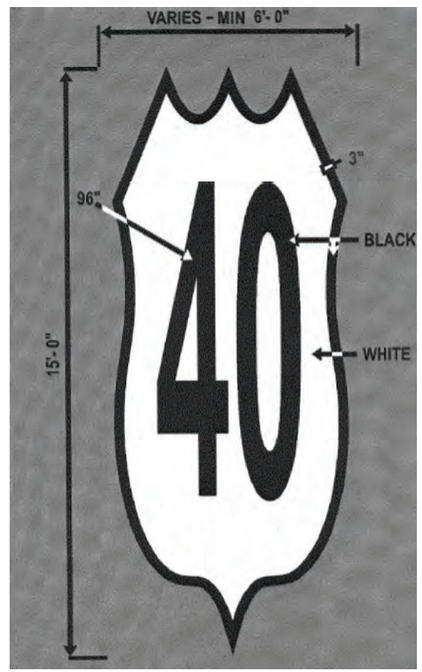

FOR USE ON LIGHT PAVEMENT.

Ⓓ

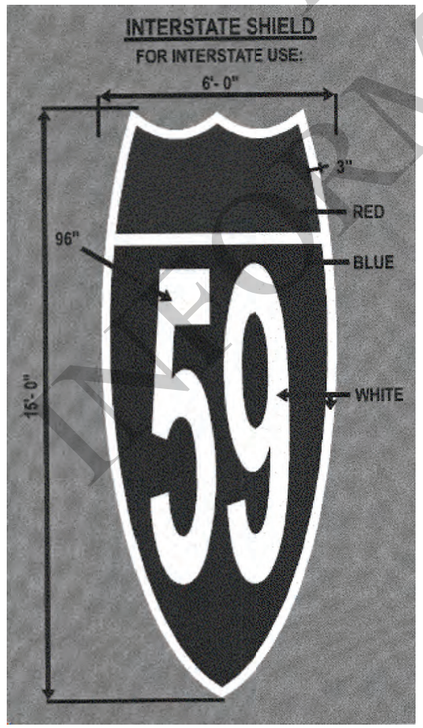

FOR INFORMATIONAL USE

SHEET NUMBER		
PARISH	CONTROL SECTION	STATE PROJECT
DESIGN B. MASON	DETAIL B. MASON	REVIEW
CHECK B. BOUCHER	CHECK B. BOUCHER	SERIES #

APPROVED BY CHIEF ENGINEER: DATE: 3/6/2026

NO.	DATE	REVISION OR CHANGE ORDER DESCRIPTION	BY

PAVEMENT MARKING DETAILS
Pavement Word and Symbol Markings for Interstate Use

PM-03

DOTD
LOUISIANA DEPARTMENT OF TRANSPORTATION & DEVELOPMENT

STANDARD PLAN

Notes:

⇨ indicates the direction of travel (not a pavement marker).

Ⓐ AUXILIARY LANE

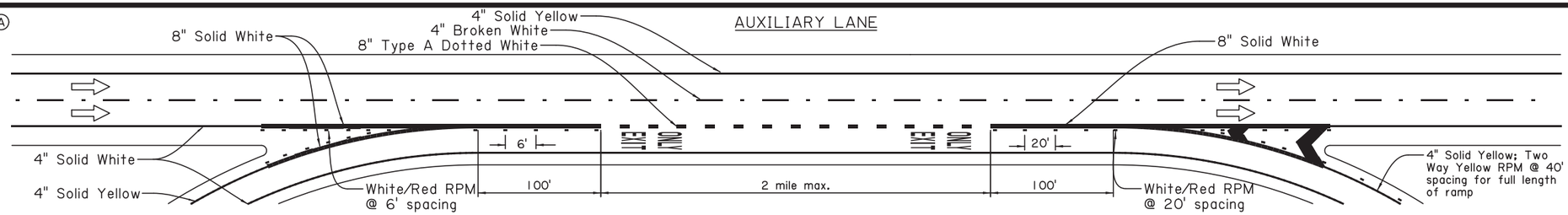

Ⓑ PARALLEL DECELERATION LANE

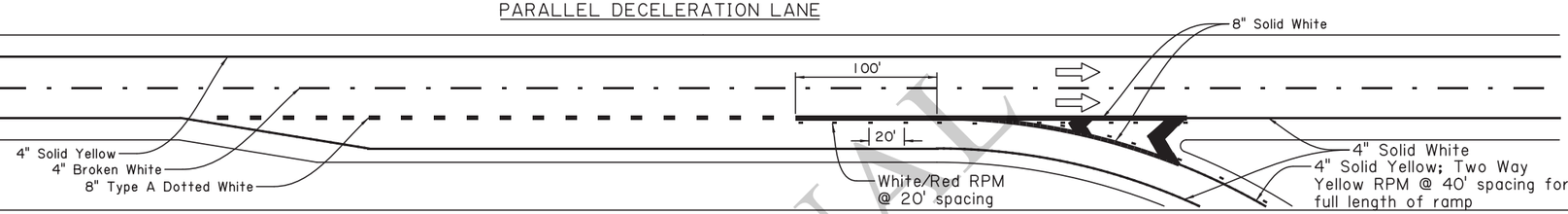

Ⓒ PARALLEL ACCELERATION LANE

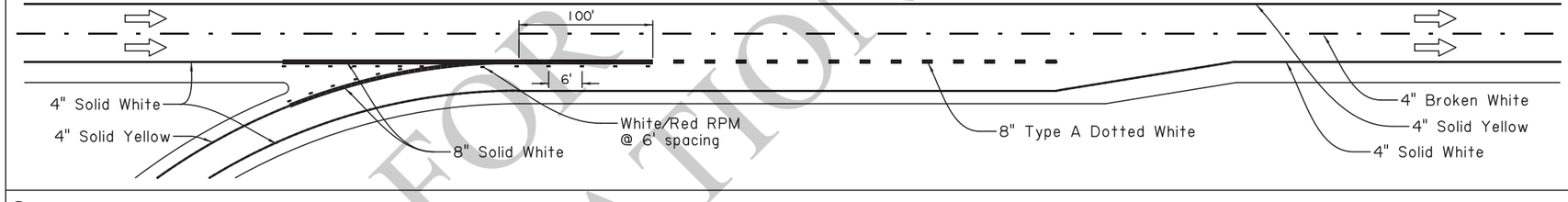

Ⓓ TAPERED ACCELERATION LANE

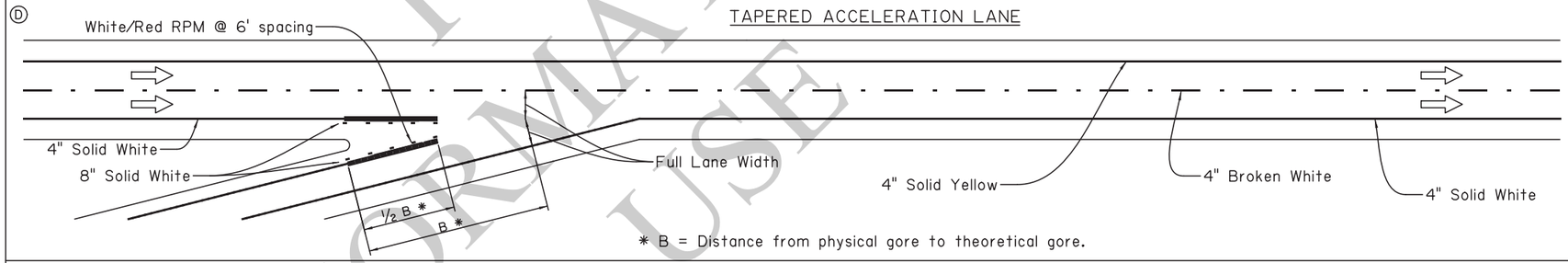

* B = Distance from physical gore to theoretical gore.

Ⓔ AUXILIARY LANE DROP

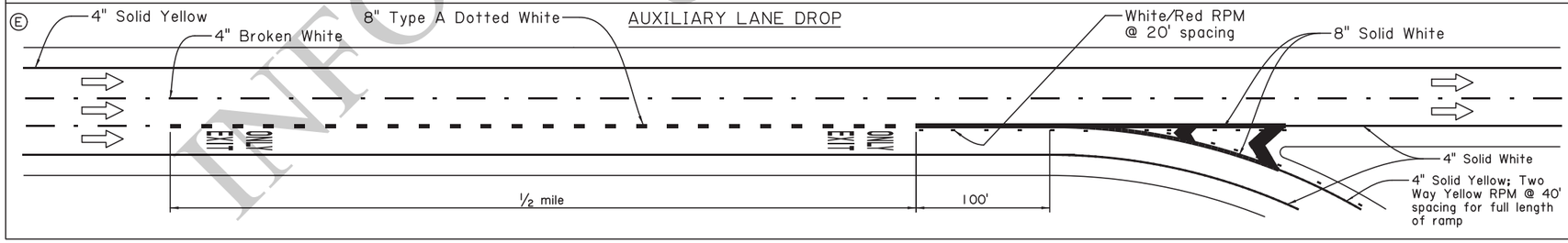

TYPICAL EXIT GORE MARKINGS

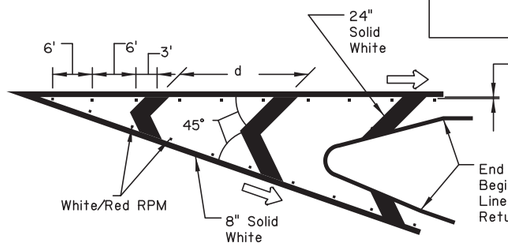

d	Mainline Speed
12'	45 MPH or Less
18'	50 or 55 MPH
24'	60 MPH or Above

FOR INFORMATIONAL USE

SHEET NUMBER

PARISH | CONTROL SECTION | STATE PROJECT

DESIGN B. MASON | DETAIL B. MASON | REVIEW
CHECK B. BOUCHER | CHECK B. BOUCHER | SERIES #

APPROVED BY CHIEF ENGINEER:

DATE: 3/6/2026

NO.	DATE	REVISION OR CHANGE	BY

STATE OF LOUISIANA

PAVEMENT MARKING DETAILS

Auxiliary, Deceleration and Acceleration Lanes and Gore Striping Layouts

PM-04

DOTD LOUISIANA DEPARTMENT OF TRANSPORTATION & DEVELOPMENT

STANDARD PLAN

(A) UNSIGNALIZED INTERSECTION ON TWO LANE ROADWAY

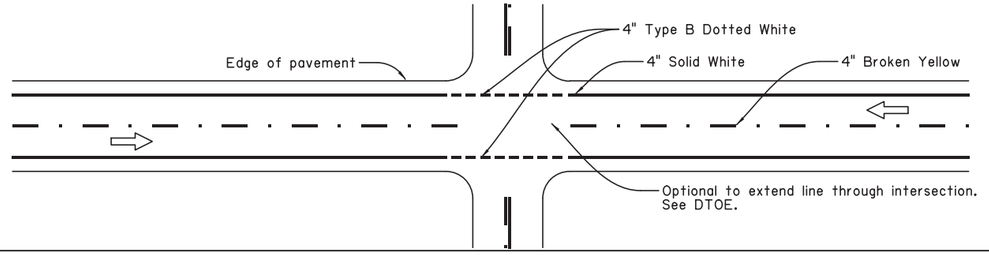

(B) SIGNALIZED INTERSECTION ON TWO LANE ROADWAY

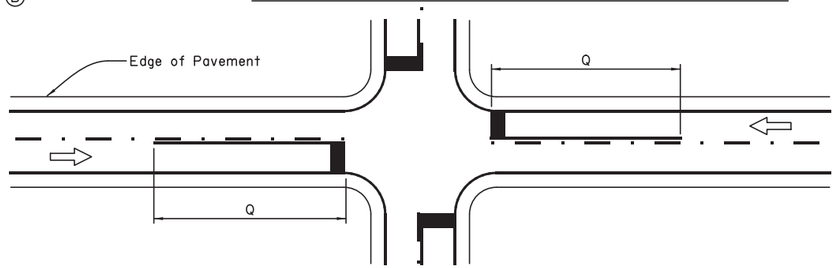

Speed Limit (mph)	Length Q (ft)
20	115
25	155
30	200
35	250
40	305
45	360
50	425
55	495

(C) UNSIGNALIZED APPROACH LEFT TURN LANE ON TWO LANE ROADWAY

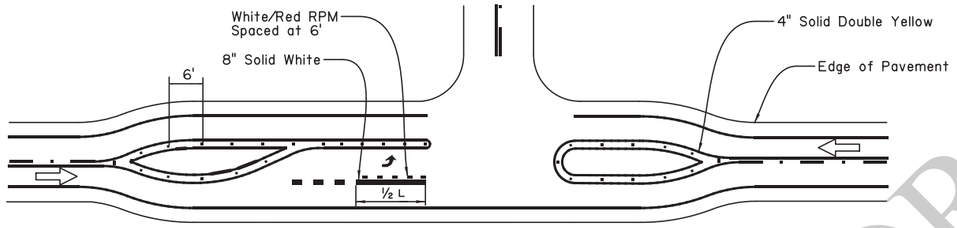

(D) STOP OR SIGNALIZED APPROACH TURN LANE DETAILS

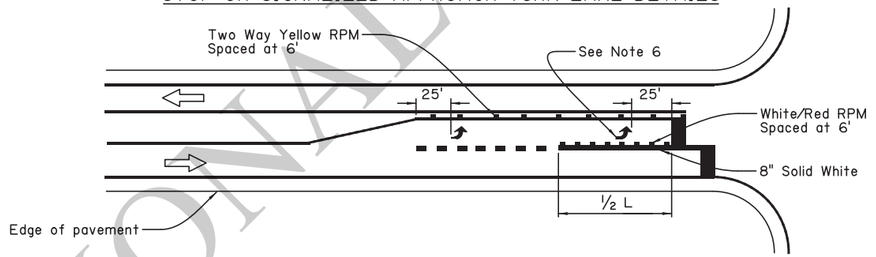

(E) TWO-WAY TURN LANE DETAILS

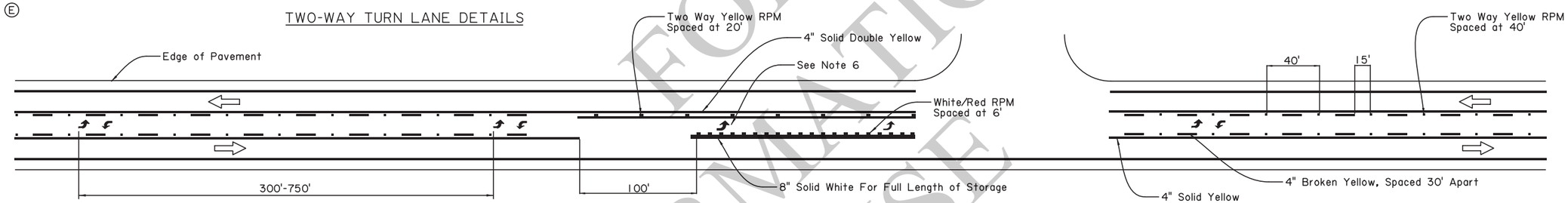

(F) R-CUT DETAILS

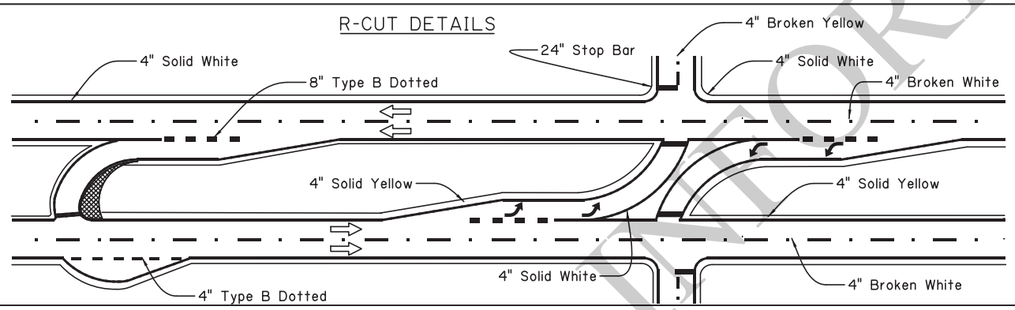

(G) UNSIGNALIZED INTERSECTION ON A FOUR LANE UNDIVIDED ROADWAY

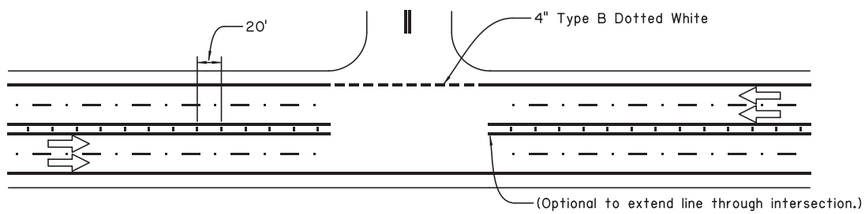

(H) SIGNALIZED DUAL LEFT AND RIGHT TURN DETAILS

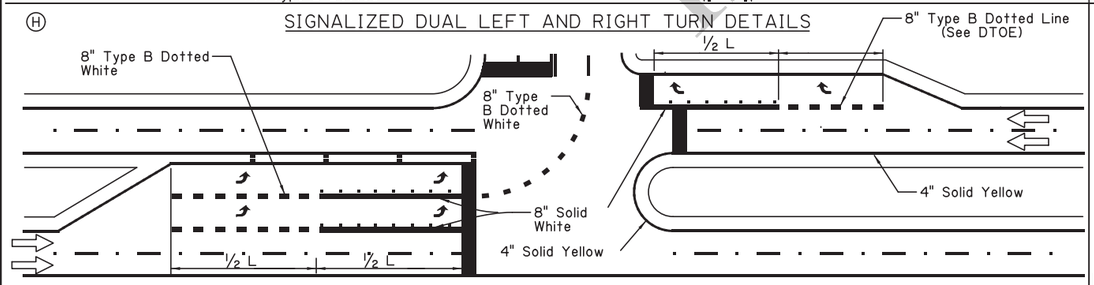

GENERAL NOTES:

1. If the minor street has edge lines, the edge lines on the major street shall wrap to meet the edge lines on the minor street.
2. Stop bars shall be 24". Stop bars shall not be placed at a distance greater than 30 feet or less than 4 feet from the nearest edge line. Stop bars at right turn lanes should be placed to provide adequate sight distance for right turning traffic.
3. The location of stop bars at left turn lanes should be determined by the turning radius needed by the side street vehicles.
4. See PM-01 for centerline and lane line details.
5. The ONLY word marking shall be used when a through lane terminates as a turn lane.
6. If more than two arrows are used, minimum spacing shall be 150'.
7. Edge lines should not be broken for driveways.
8. ⇨ indicates the direction of travel (not a pavement marker).
9. L equals the full length of turn lane.
10. Use of dotted lines require DTOE approval.

FOR INFORMATIONAL USE

SHEET NUMBER

PARISH	CONTROL SECTION	STATE PROJECT

DESIGN	CHECK	DETAIL	CHECK	REVIEW	SERIES #
B. MASON	B. BOUCHER	B. MASON	B. BOUCHER		

APPROVED BY CHIEF ENGINEER: DATE: 3/6/2026

NO.	DATE	REVISION OR CHANGE ORDER DESCRIPTION	BY

PAVEMENT MARKING DETAILS
Typical Intersection Striping Layouts
PM-05

DOTD LOUISIANA DEPARTMENT OF TRANSPORTATION & DEVELOPMENT

STANDARD PLAN

Ⓐ

TWO LANE TO FOUR LANE DIVIDED HIGHWAY

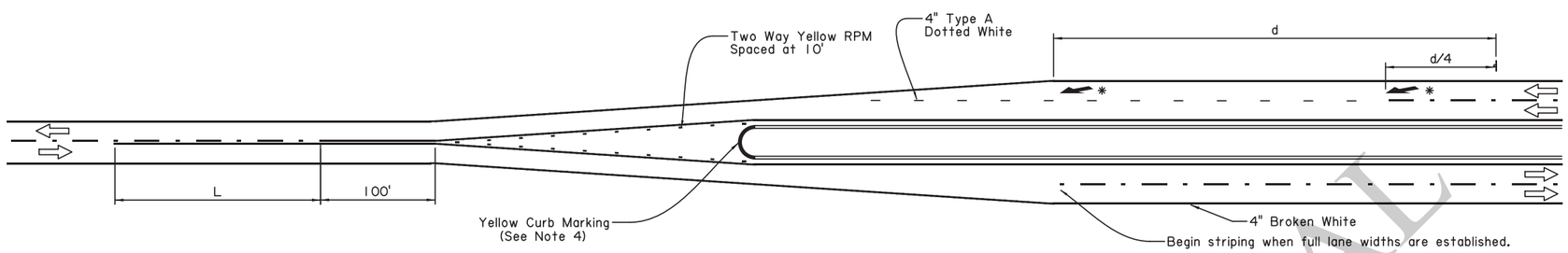

85th Precentile or Speed Limit (mph)	Length of No Passing Minimum (L in feet)
20	115
25	155
30	200
35	250
40	305
45	360
50	425
55	495
60	570
65	645
70	730

* No more than two reduction arrows shall be used per lane reduction.

Ⓑ

TWO LANE TO FOUR LANE UNDIVIDED HIGHWAY

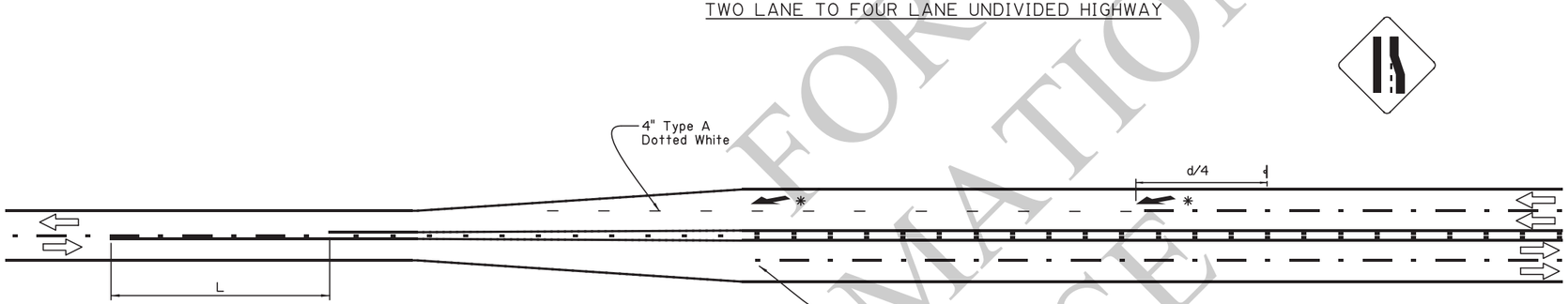

85th Precentile or Speed Limit (mph)	Distance d (ft)
20	225
25	325
30	460
35	565
40	670
45	775
50	885
55	990
60	1100
65	1200
70	1250

* No more than two reduction arrows shall be used per lane reduction.

Ⓒ

ISLAND MARKINGS

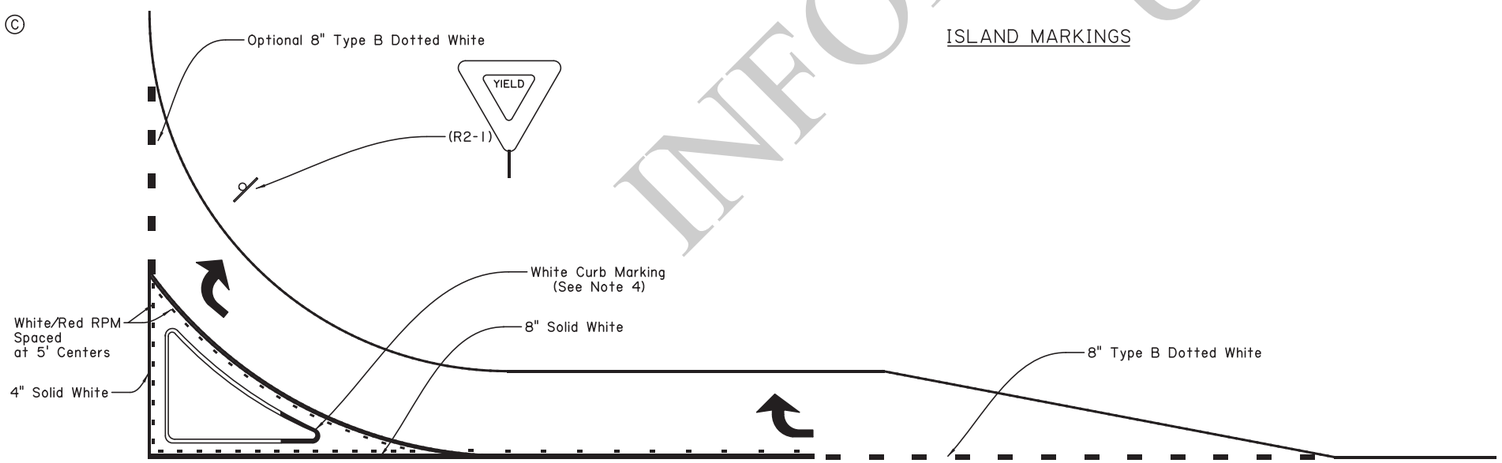

General Notes:

1. ⇨ indicates direction of travel (not a pavement marker).
2. See PM-01 for centerline and lane line details.
3. All dotted lines are optional with DTOE Approval.
4. If used, curb marking for island delineation shall cover the approach nose radii or as directed by the DTOE.

FOR INFORMATIONAL USE

SHEET NUMBER

PARISH	CONTROL SECTION	STATE PROJECT

DESIGN	B. MASON	DETAIL	B. MASON	REVIEW	SERIES #
CHECK	B. BOUCHER	CHECK	B. BOUCHER		

APPROVED BY CHIEF ENGINEER:

DATE: 3/6/2026

NO.	DATE	REVISION OR CHANGE ORDER DESCRIPTION	BY

STATE OF LOUISIANA DEPARTMENT OF TRANSPORTATION AND DEVELOPMENT

PAVEMENT MARKING DETAILS

Lane Reduction and Island Layouts

PM-06

DOTD LOUISIANA DEPARTMENT OF TRANSPORTATION & DEVELOPMENT

STANDARD PLAN

Ⓐ

TWO-LANE ROADWAY

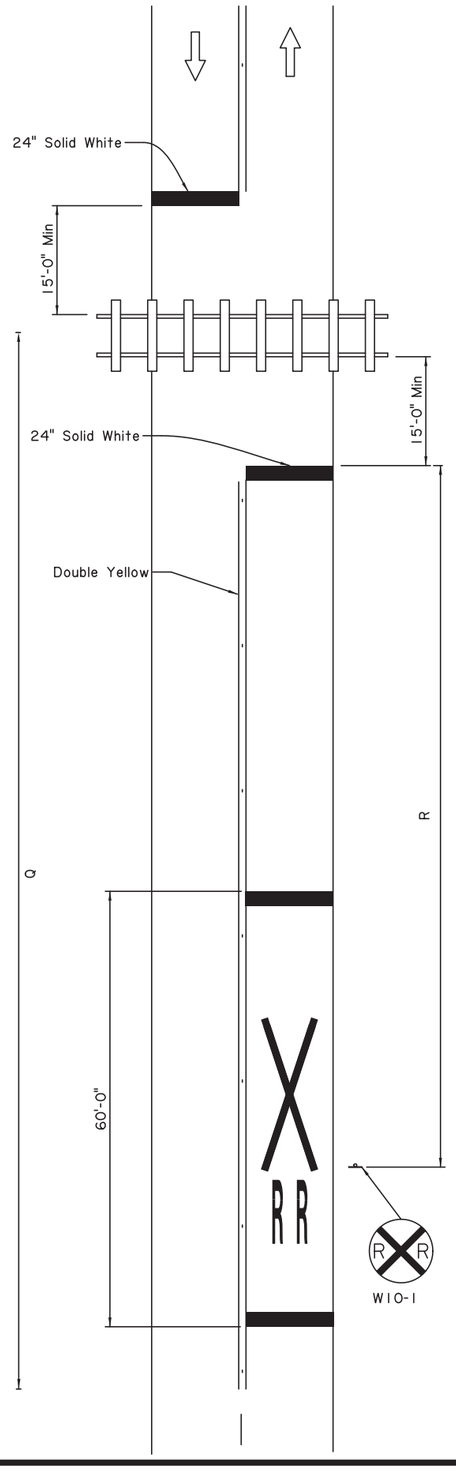

Ⓑ

THREE-LANE ROADWAY

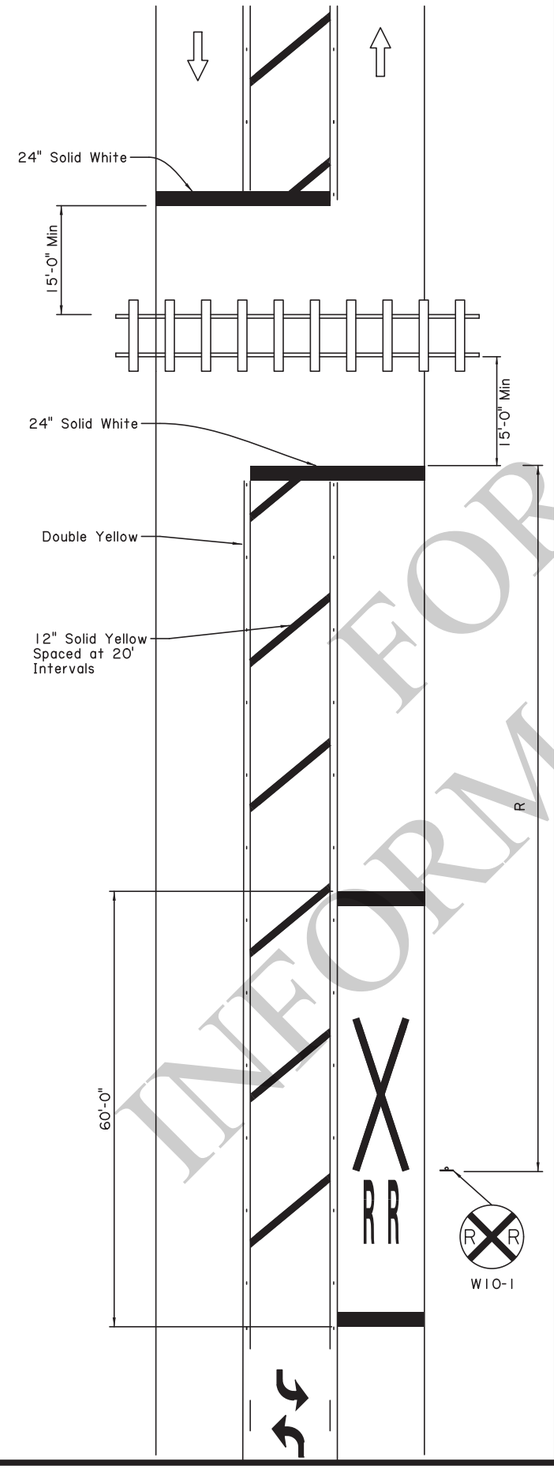

Ⓒ

FOUR-LANE ROADWAY

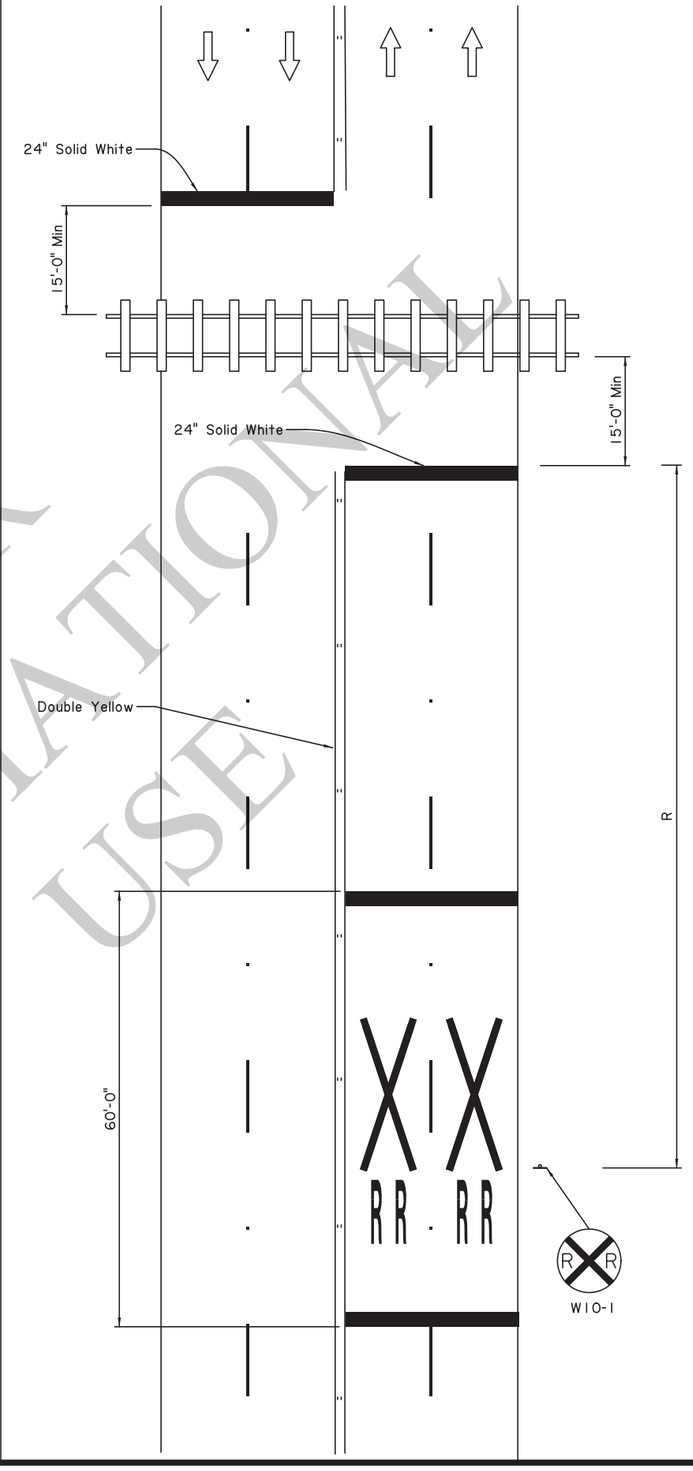

85th Percentile Speed or Design Speed (mph)	Length of No Passing Zone (Q)
25	285'
30	315'
35	335'
40	360'
45	410'
50	460'
≥55	560'

85th Percentile Speed or Posted Speed (mph)	Advanced Placement of Warning Sign (R)
20	115'
25	155'
30	200'
35	250'
40	305'
45	360'
50	425'
55	495'
60	570'
65	645'

Notes:

1. ⇨ indicates the direction of travel (not a pavement marker).
2. No Passing Zone is measured from center of tracks.
3. A portion of the X in the Railroad Crossing Marking should be placed adjacent to the W10-1 Sign.

FOR INFORMATIONAL USE

SHEET NUMBER

PARISH	CONTROL SECTION	STATE PROJECT

DESIGN	B. MASON	DETAIL	B. MASON	REVIEW	SERIES #
CHECK	B. BOUCHER	CHECK	B. BOUCHER		

APPROVED BY CHIEF ENGINEER: DATE: 3/6/2026

NO.	DATE	REVISION OR CHANGE ORDER DESCRIPTION	BY

PAVEMENT MARKING DETAILS

Railroad Crossing Layout

PM-07

DOTD LOUISIANA DEPARTMENT OF TRANSPORTATION & DEVELOPMENT

STANDARD PLAN

Ⓐ

CROSSWALK MARKINGS AT SIGNALIZED INTERSECTION

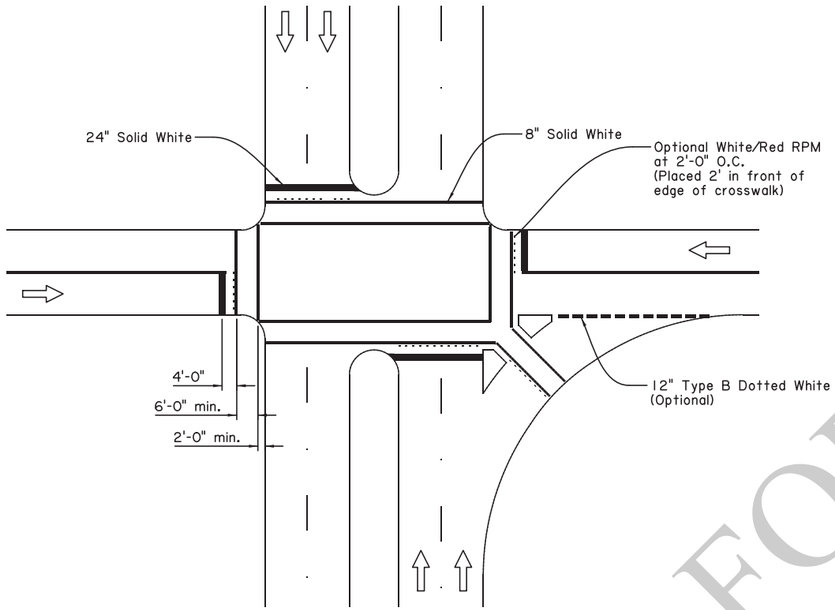

Ⓑ

CROSSWALK MARKINGS AT UNSIGNALIZED INTERSECTION

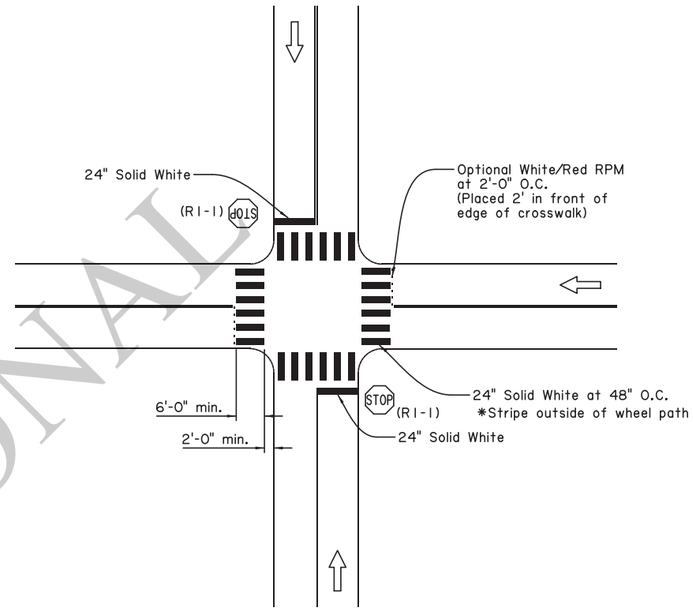

Ⓒ

UNCONTROLLED MID-BLOCK CROSSWALK MARKINGS

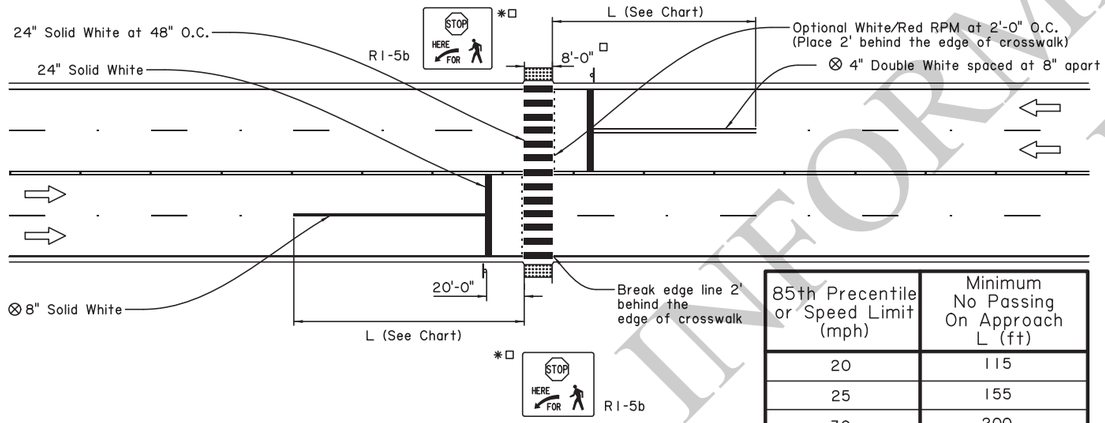

85th Precentile or Speed Limit (mph)	Minimum No Passing On Approach L (ft)
20	115
25	155
30	200
35	250
40	305
45	360
50	425
55	495
60	570
65	645
70	730

⊗ At approaches to mid-block crossings, roadways with design speeds x > 35 mph shall use double 4" solid white lines as lane lines. Design speeds x ≤ 35 mph shall use a single 8" solid white line.

* If within a school zone, sign may be changed to the In Street Schoolchildren Crossing (R1-6c) sign.

□ For shared use paths, R1-5e signs should be used on multi-lane approaches and crosswalks should at least match facility widths.

Ⓓ

BIKE LANE AT INTERSECTION WITH RIGHT TURN LANE

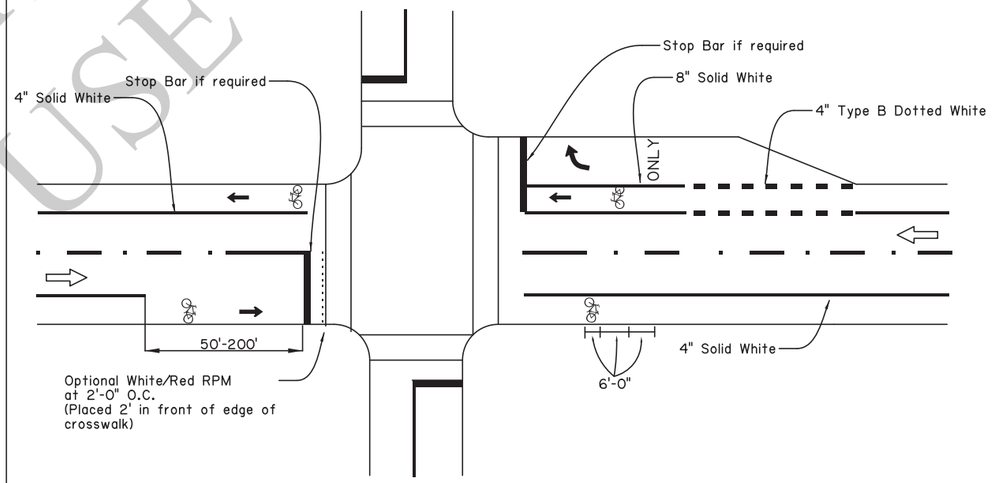

GENERAL NOTES:

1. If the width of the existing sidewalk is greater than 6 feet, the width of the crosswalk should match the width of the sidewalk, except at midblock crossings where the crosswalk width shall be 8' minimum.
2. ⇨ indicates direction of travel (not a pavement marker).
3. Bicycle pavement markings should be placed at the beginning of bike lanes, before and after each intersection with a minimum spacing of 100 ft in urban areas to a maximum of 1000 feet in suburban areas.

FOR INFORMATIONAL USE

SHEET NUMBER

PARISH	CONTROL SECTION	STATE PROJECT

DESIGN	B. MASON	DETAIL	B. MASON	REVIEW	SERIES #
CHECK	B. BOUCHER	CHECK	B. BOUCHER		

APPROVED BY CHIEF ENGINEER: DATE: 3/6/2026

NO.	DATE	REVISION OR CHANGE ORDER DESCRIPTION	BY

STATE OF LOUISIANA

PAVEMENT MARKING DETAILS

Pedestrian/Bike Striping Layout

PM-08

DOTD LOUISIANA DEPARTMENT OF TRANSPORTATION & DEVELOPMENT

STANDARD PLAN

Ⓐ

ONE-LANE ROUNDABOUT

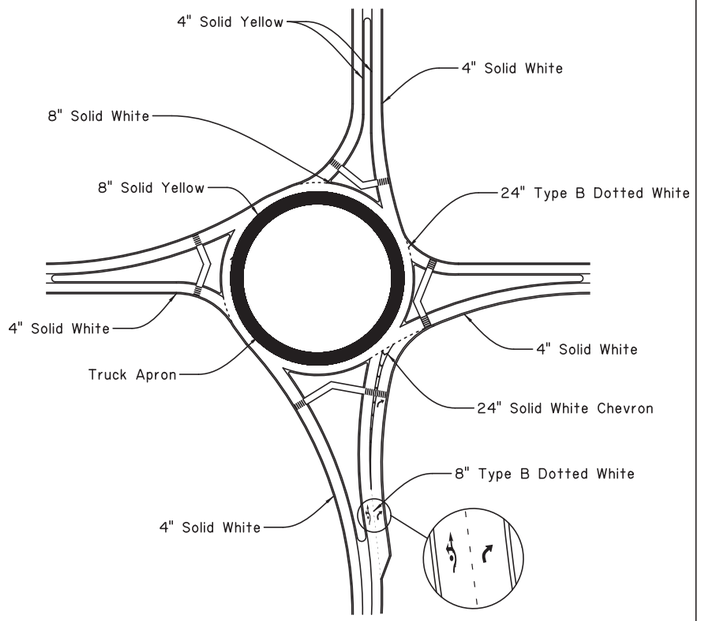

Note: No arrow pavement markings are to be used on single lane approaches.

Ⓑ

TWO-LANE ROUNDABOUT WITH ONE AND TWO LANE APPROACHES

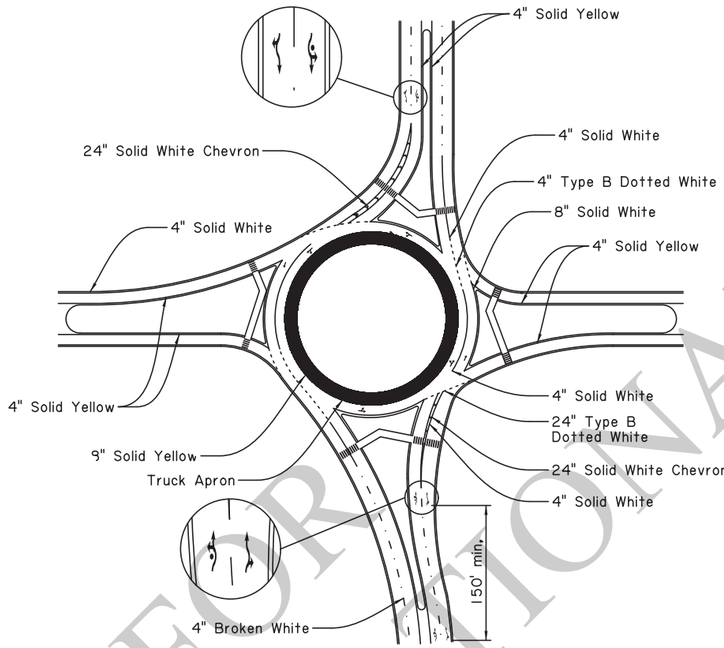

Ⓒ

TWO-LANE ROUNDABOUT

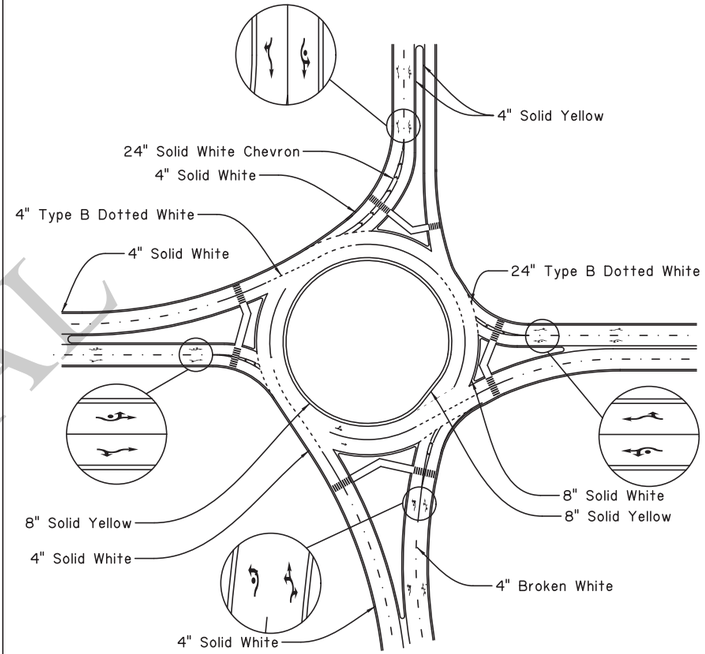

Ⓓ

APPROACH DETAILS

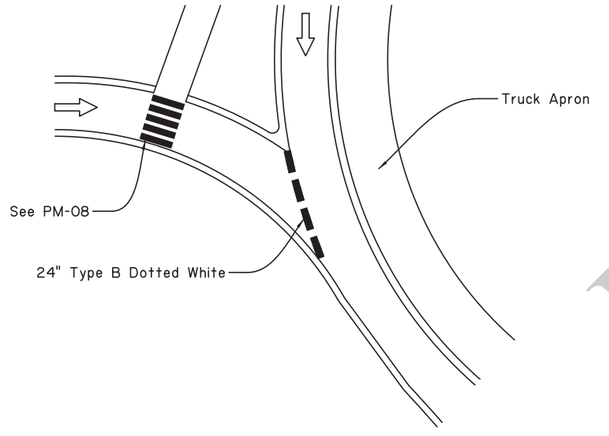

Note: ⇨ indicates direction of travel (not a pavement marker).

Ⓔ

COMPONENT KEY

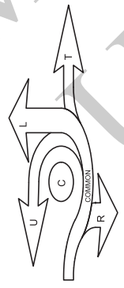

The labeled areas above correspond to the portions needed for each type of roundabout traffic arrow.

"C" should only be used in the inside lane.

GENERAL NOTES:

1. Each roundabout approach shall have two sets of arrows.
   The first set shall be located at the guide sign.
   The second set shall be located at the theoretical gore of the splitter island.
2. Crosswalks shall be placed a minimum of 20 feet from the edge line of the circulatory roadway. See PM-08 for crosswalk details.
3. See PM-02 for fishhook details.
4. See PM-06 for island details.

FOR INFORMATIONAL USE

SHEET NUMBER		
PARISH	CONTROL SECTION	STATE PROJECT
DESIGN B. MASON	DETAIL B. MASON	REVIEW
CHECK B. BOUCHER	CHECK B. BOUCHER	SERIES #

APPROVED BY CHIEF ENGINEER: DATE: 3/6/2026

NO.	DATE	REVISION OR CHANGE ORDER DESCRIPTION	BY

STATE OF LOUISIANA DEPARTMENT OF TRANSPORTATION AND DEVELOPMENT

PAVEMENT MARKING DETAILS

Roundabout Striping Layout

PM-09

DOTD LOUISIANA DEPARTMENT OF TRANSPORTATION & DEVELOPMENT

STANDARD PLAN

NOTE:

THE LENGTH SHOWN FOR R.C. BOX CULVERTS ON PROJECT PLANS IS MEASURED INSIDE TO INSIDE OF HEADWALLS. IF PRECAST R.C. BOX CULVERTS ARE USED THE ACTUAL BARREL LENGTH REQUIRED WILL BE THE LENGTH INSIDE HEADWALLS LESS 2'-0" MINIMUM PER END.

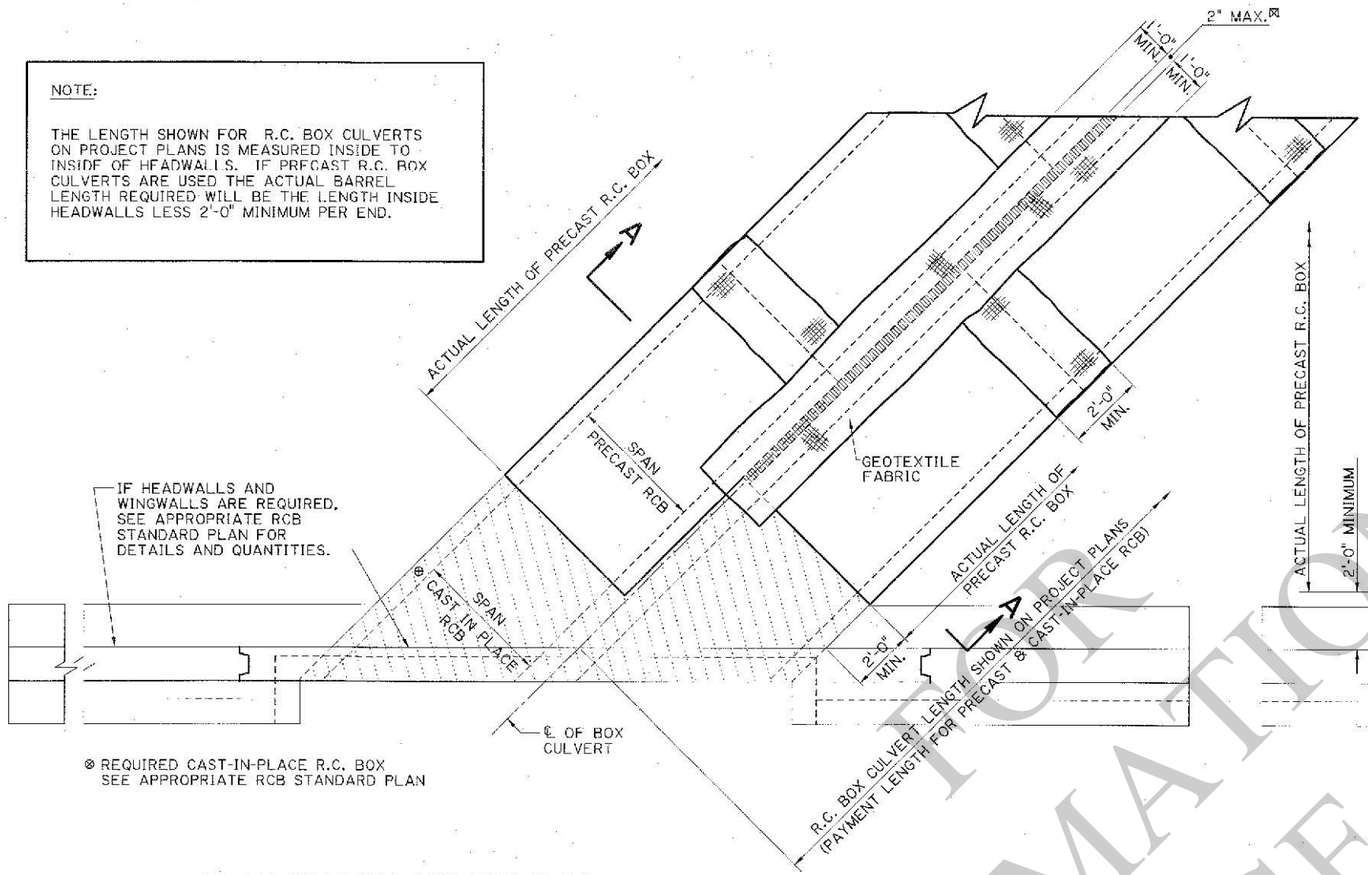

⊗ REQUIRED CAST-IN-PLACE R.C. BOX SEE APPROPRIATE RCB STANDARD PLAN

PLAN SHOWING MULTIPLE PRECAST RCB CULVERTS ON A SKEWED CROSSING WITH HEADWALLS

⊠2" MAX. SPACE ALLOWED BETWEEN PRECAST UNITS, IF NECESSARY. TO BE END BLOCKED AND FILLED WITH SAND OR FLOWABLE FILL. COST TO BE INCLUDED IN COST OF PRECAST RCB.

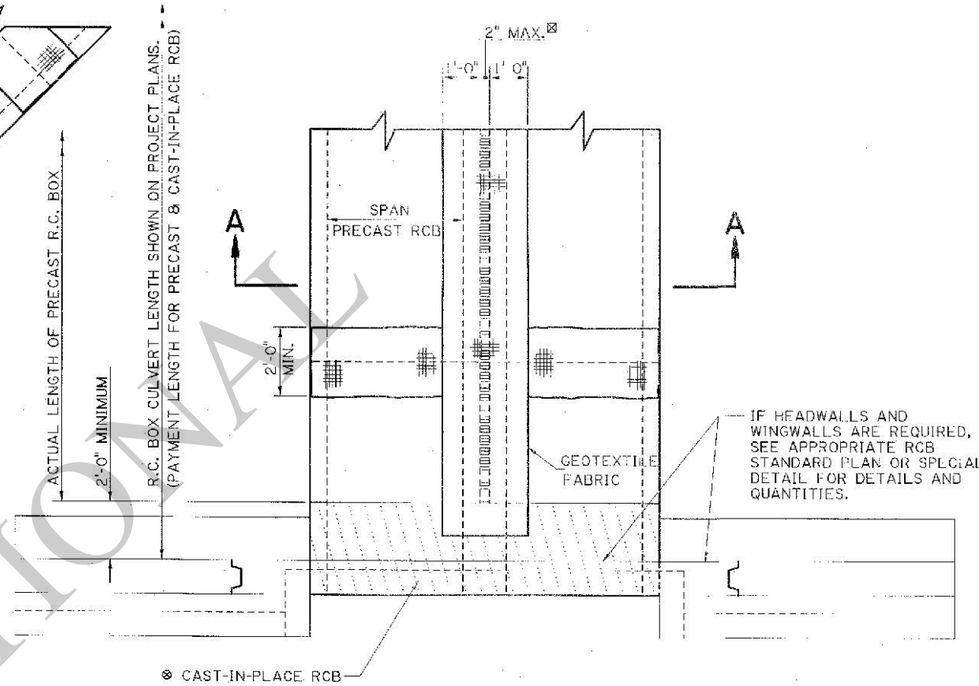

PLAN SHOWING MULTIPLE PRECAST RCB CULVERTS ON A STRAIGHT (90°) CROSSING WITH HEADWALLS

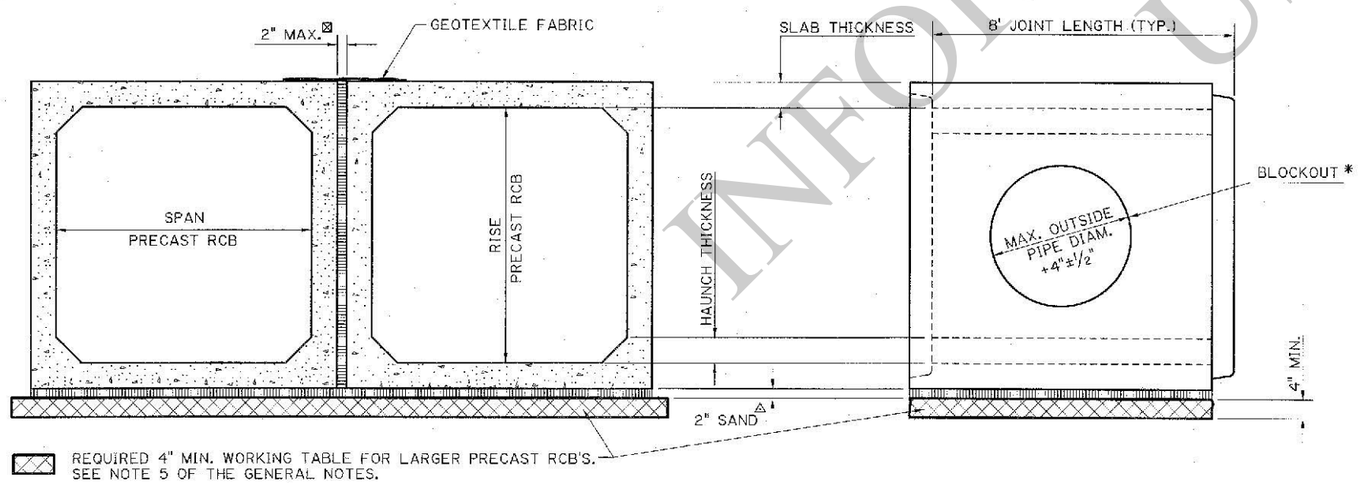

SECTION A-A

SIDE ELEVATION OF PIPE JOINT SHOWING MAXIMUM BLOCKOUT AND PIPE DIAMETER

GENERAL NOTES

1) FOR GENERAL SPECIFICATIONS OF PRECAST RCB SEE SECTION 805 AND 1016 OF THE LA DOTD STANDARD SPECIFICATIONS.

2) A MINIMUM 2 FOOT WIDE STRIP OF GEOTEXTILE FABRIC SHALL COVER THE ADJOINING LONGITUDINAL EDGES OF MULTI-BARREL BOXES AND JOINTS BETWEEN PRECAST UNITS. FABRIC EDGES AND ENDS SHALL BE SUITABLY SECURED. GEOTEXTILE FABRIC SPECIFICATIONS SHALL CONFORM TO THE SPECIFICATIONS FOR PIPE UNDER SECTION 1019 OF THE LA DOTD STANDARD SPECIFICATIONS. COST TO BE INCLUDED IN COST OF PRECAST RCB.

3) #4 DOWEL BARS, MINIMUM 20" LONG (10" EMBEDDED) AT 12' CENTERS ARE REQUIRED, TO CONNECT THE LAST PRECAST UNIT TO ANY CAST-IN-PLACE SECTION OF BOX.

* 4) BLOCKOUTS FOR PIPE INTO PRECAST RCBS ARE THE RESPONSIBILITY OF THE CONTRACTOR. BLOCKOUT LOCATIONS ARE AS DIRECTED BY THE PROJECT ENGINEER. BLOCKOUT SHALL NOT BE GREATER THAN ½ THE RISE OF PRECAST RCB AND SHALL NOT BE LOCATED IN THE HAUNCH.

△ 5) IN ADDITION TO BEDDING MATERIAL, A MINIMUM 4 INCH THICK, CLASS R CONCRETE, WORKING TABLE WILL BE REQUIRED FOR 6' X 6' AND LARGER PRECAST RCB FIELD INSTALLATIONS. AN ADDITIONAL 2 INCHES OF SAND SHALL BE PLACED AND LEVELED UPON THE CONCRETE WORKING TABLE. COST OF WORKING TABLE AND SAND TO BE INCLUDED IN COST OF PRECAST RCB.

⊗ 6) FOR THE CAST-IN-PLACE PORTIONS OF THE CULVERT, THE REBAR SIZE AND SPACING SHALL MATCH OR EXCEED THE PRECAST SECTIONS. CONTRACTOR TO USE APPROVED PRECAST RCB SHOP DRAWING FOR REBAR REQUIREMENTS.

7) WALL AND SLAB THICKNESSES MAY VARY IN THE TRANSITION AREA BETWEEN THE LAST PRECAST UNIT AND THE CAST-IN-PLACE SECTION OF THE BOX AND HEADWALL. CONTRACTOR SHALL MAKE ADJUSTMENTS TO THE DIMENSIONS AND QUANTITIES OF REINFORCING STEEL AND CONCRETE IN THE CAST-IN-PLACE SECTIONS AS NECESSARY AT NO ADDITIONAL COST.

FOR INFORMATIONAL USE

SHEET NUMBER

PARISH | CONTROL SECTION | STATE PROJECT

DESIGN CHECK | DETAIL CHECK | REVIEW | SERIES # 1 OF 1

APPROVED BY CHIEF ENGINEER: DATE: 6/1/2024

REVISION OR CHANGE ORDER DESCRIPTION | NO. | DATE | BY

PRECAST REINFORCED CONCRETE BOX CULVERTS
DETAILS AND SPECIFICATIONS

PRCB-01

DOTD LOUISIANA DEPARTMENT OF TRANSPORTATION & DEVELOPMENT

STANDARD PLAN

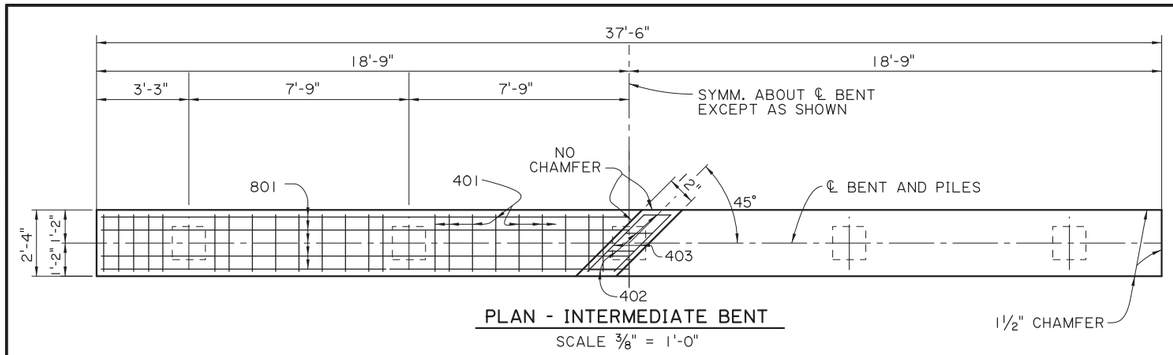

PLAN - INTERMEDIATE BENT

SCALE ⅜" = 1'-0"

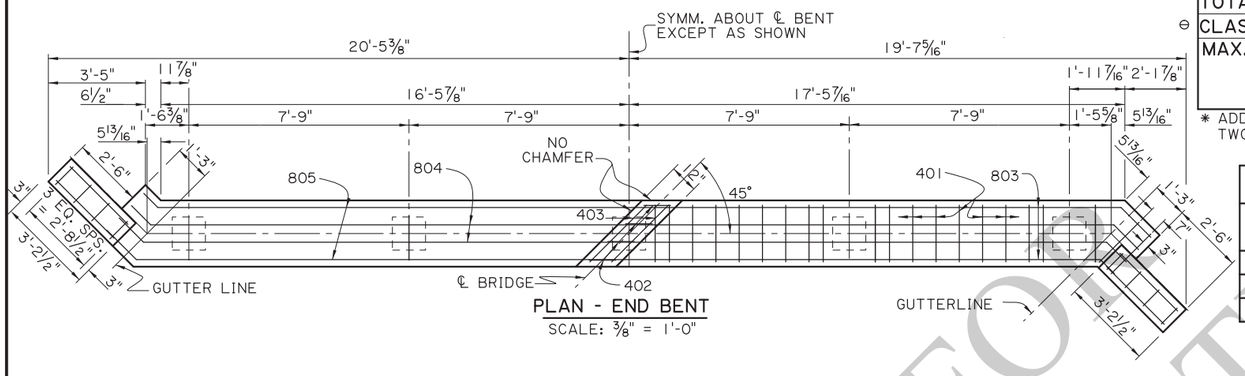

PLAN - END BENT

SCALE: ⅜" = 1'-0"

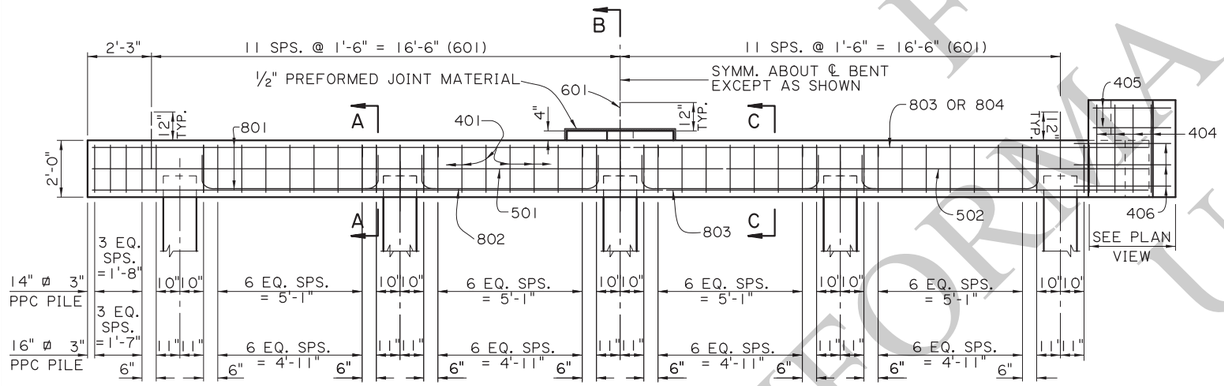

HALF ELEVATION - INTERMEDIATE BENT

SCALE ⅜" = 1'-0"

HALF ELEVATION - END BENT

SCALE ⅜" = 1'-0"

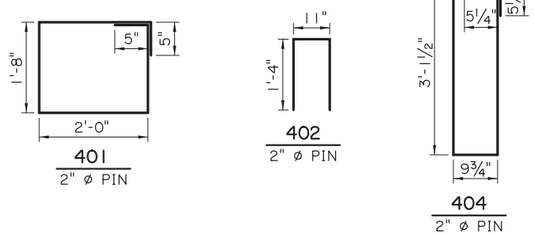

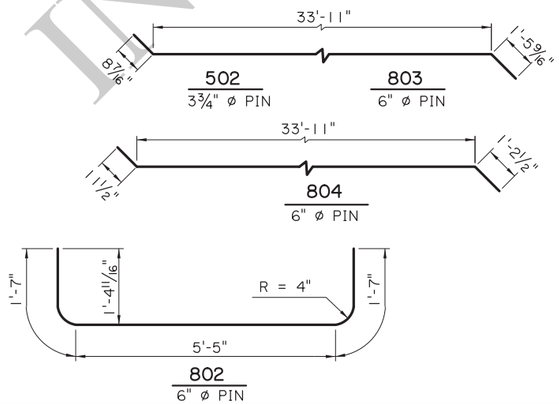

ESTIMATED QUANTITIES (ONE INTER. BENT)

BAR	NO.	UNIT LENGTH	TOTAL LENGTH	LOCATION
801	6	37'-2"	223'-0"	LONGIT. IN CAP
802	8	8'-7"	68'-8"	LONGIT. IN CAP
TOTAL NO. 8 BARS = 291'-8" = 779 LBS.				
601	23	2'-0"	46'-0"	DOWELS
TOTAL NO. 6 BARS = 46'-0" = 69 LBS.				
501	2	37'-2"	74'-4"	LONGIT. IN CAP
TOTAL NO. 5 BARS = 74'-4" = 78 LBS.				
401	46	8'-2"	375'-8"	STIRRUPS IN CAP
402	4	3'-7"	14'-4"	STIRRUPS IN RISER
403	2	2'-9"	5'-6"	LONGIT. IN RISER
TOTAL NO. 4 BARS = 395-6" = 264 LBS.				

TOTAL DEFORMED REINFORCING STEEL= 1,190 LBS.

CLASS A1 CONCRETE = 6.28 CU. YDS.

MAX. PILE LOAD: SERVICE DEAD LOAD = 24 TONS
SERVICE LIVE LOAD = 31 TONS
FACTORED TOTAL LOAD= 75 TONS

* ADD 69 LBS. OF REINFORCING STEEL (23-601 DOWELS) WHEN TWO FIXED ENDS OCCUR ON THE SAME BENT.

ESTIMATED QUANTITIES (ONE END BENT)

BAR	NO.	UNIT LENGTH	TOTAL LENGTH	LOCATION
802	8	8'-7"	68'-8"	LONGIT. IN CAP
803	4	36'-1"	144'-4"	LONGIT. IN CAP
804	2	36'-1"	72'-2"	LONGIT. IN CAP
TOTAL NO. 8 BARS = 285'-2" = 761 LBS.				
601	23	2'-0"	46'-0"	DOWELS
TOTAL NO. 6 BARS = 46'-0" = 69 LBS.				
502	2	36'-2"	72'-4"	LONGIT. IN CAP
TOTAL NO. 5 BARS = 72'-4" = 75 LBS.				
401	42	8'-2"	343'-0"	STIRRUPS IN CAP
402	4	3'-7"	14'-4"	STIRRUPS IN RISER
403	2	2'-9"	5'-6"	LONGIT. IN RISER
404	8	8'-9"	70'-0"	STIRRUPS IN WINGWALL
405	8	2'-10"	22'-8"	LONGIT. IN WINGWALL
406	12	4'-0"	48'-0"	LONGIT. IN WINGWALL
TOTAL NO. 4 BARS = 503'-6" = 336 LBS.				

TOTAL DEFORMED REINFORCING STEEL= 1,241 LBS.

CLASS A1 CONCRETE = 6.91 CU. YDS.

MAX. PILE LOAD: SERVICE DEAD LOAD = 24 TONS
SERVICE LIVE LOAD = 31 TONS
FACTORED TOTAL LOAD = 75 TONS

⊖ 16" ø PPC PILES USED FOR ESTIMATING PURPOSES ONLY. (ADD 0.03 CU. YDS. OF CLASS A1 CONCRETE PER BENT WHEN 14" ø PPC PILES ARE USED.)

AS-DESIGNED RATING

VEHICLE	RATING FACTOR	NOTES
HL-93 (INV)	1.776	———
HL-93 (OPR)	2.290	———
LADV-11 (INV)	1.359	MAGNIFICATION FACTOR = 1.3

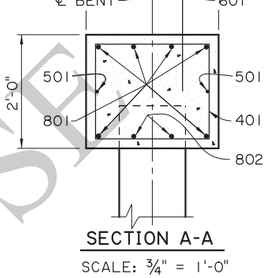

SECTION A-A

SCALE: ¾" = 1'-0"

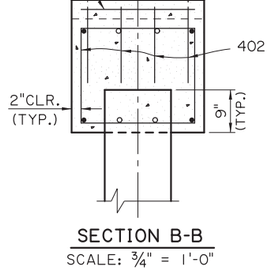

SECTION B-B

SCALE: ¾" = 1'-0"

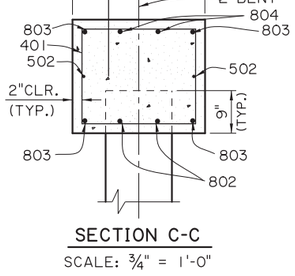

SECTION C-C

SCALE: ¾" = 1'-0"

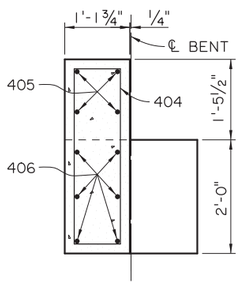

END ELEVATION

SCALE ¾" = 1'-0"

NOTES:

DESIGN SPECIFICATIONS: AASHTO LRFD BRIDGE DESIGN SPECIFICATIONS 4th EDITION, WITH 2008 & 2009 INTERIMS.

DESIGN LOAD: LIVE LOAD IS HL-93, AND LADV-11 (LOUISIANA DESIGN VEHICLE LIVE LOAD 2011).

STRUCTURAL CONCRETE: ALL CONCRETE SHALL BE CLASS A1. EXPOSED EDGES SHALL HAVE A ¾" CHAMFER UNLESS SPECIFIED OTHERWISE. ALL EXPOSED FACES OF WINGWALLS AND ENDS OF CAPS SHALL RECEIVE A SURFACE FINISH AS PER THE SPECIFICATIONS UNLESS SPECIFIED OTHERWISE. ASPHALT SATURATED FELT SHALL BE INCLUDED IN THE COST OF CLASS CLASS A1 CONCRETE.

REINFORCING STEEL: ALL REINFORCING SHALL BE GRADE 60. DIMENSIONS RELATING TO FABRICATION ARE OUT TO OUT OF BARS, UNLESS SPECIFIED OTHERWISE. DIMENSIONS RELATING TO SPACING ARE TO BAR CENTERS, UNLESS SPECIFIED OTHERWISE. DOWELS (601 BARS) SHALL BE PROVIDED AT ALL FIXED BEARINGS AND APPROACH SLAB BEARINGS. ALL EXPOSED ENDS OF DOWELS SHALL BE WRAPPED WITH TWO LAYERS OF 15 LB. ASPHALT SATURATED FELT. CLOSE FITTING TUBES OF COMPRESSIBLE MATERIAL NOT LESS THAN 3/16" THICK MAY BE SUBSTITUTED.

PRECAST CONCRETE PILES: CONFORM TO PILE STANDARD PLAN AND PROJECT PLANS FOR FABRICATION AND INSTALLATION. PILES WILL BE PAID FOR UNDER THE DESIGNATED PILE PAY ITEMS.

PREFORMED JOINT MATERIAL: PREFORMED JOINT MATERIAL SHALL BE IN ACCORDANCE WITH THE SPECIFICATIONS.

PAYMENT: ALL OTHER WORK WILL BE PAID FOR UNDER THE DESIGNATED BRIDGE SUPERSTRUCTURE AND SUBSTRUCTURE PAY ITEM AND IN ACCORDANCE WITH THE SPECIFICATIONS.

SHEET NUMBER

PARISH | CONTROL SECTION | STATE PROJECT

DESIGN J. NAKHLEH | CHECK H. THOMAS | DETAIL D. HYMEL | CHECK J. NAKHLEH | REVIEW | SERIES # 1 OF 13

APPROVED BY CHIEF ENGINEER: DATE: 12/10/2025

NO. | DATE | REVISION OR CHANGE ORDER DESCRIPTION | BY

STATE OF LOUISIANA DEPARTMENT OF TRANSPORTATION AND DEVELOPMENT

BENTS REINFORCED CONCRETE PILE BENTS

24'-0" CLEAR ROADWAY
45° CROSSING TWO WAY TANGENT

PSS-45-24-20SL

DOTD LOUISIANA DEPARTMENT OF TRANSPORTATION & DEVELOPMENT

STANDARD PLAN

FOR INFORMATIONAL USE ONLY

11/25/2025 07:1

IP_PWP:d1245749\SS4524bent(LRFD).dgn

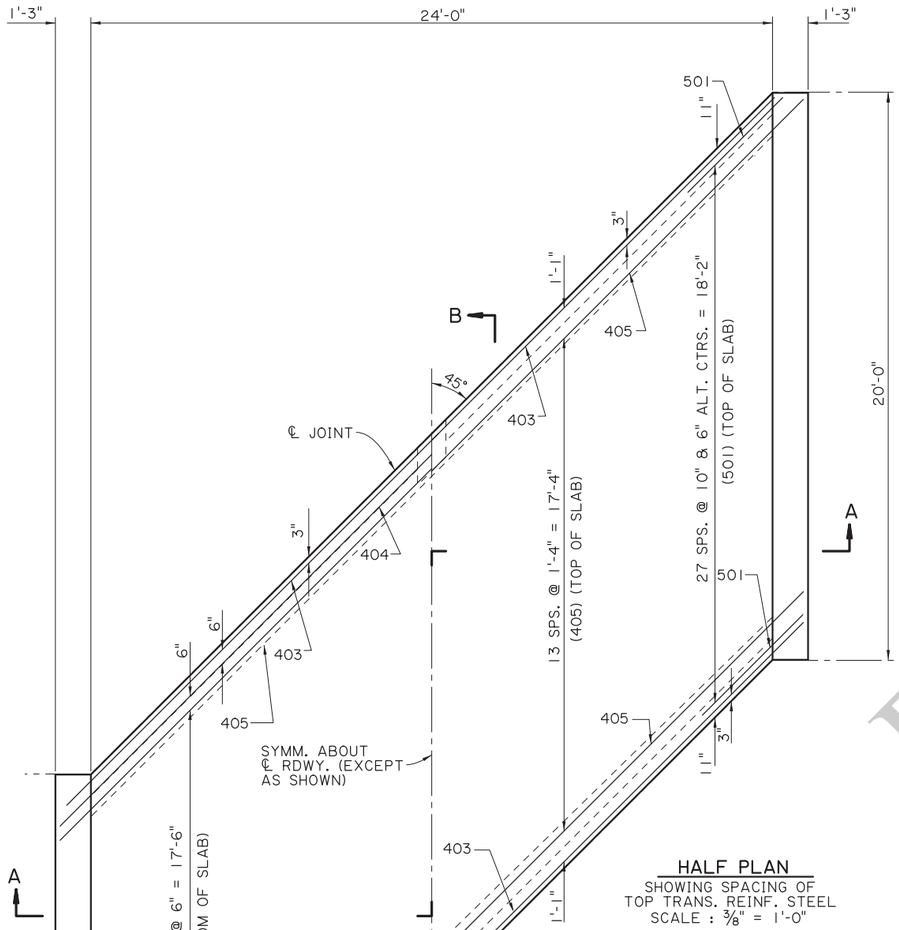

HALF PLAN
SHOWING SPACING OF
TOP TRANS. REINF. STEEL
SCALE : 3/8" = 1'-0"

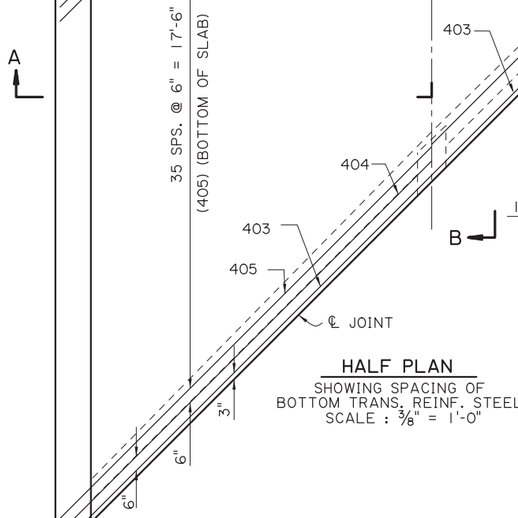

HALF PLAN
SHOWING SPACING OF
BOTTOM TRANS. REINF. STEEL
SCALE : 3/8" = 1'-0"

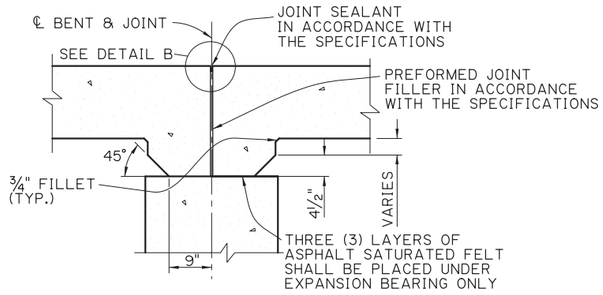

DETAIL SHOWING TYPICAL JOINT & HAUNCH
SCALE : 1/2" = 1'-0"

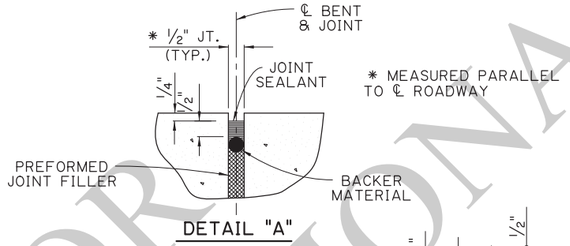

DETAIL "A"

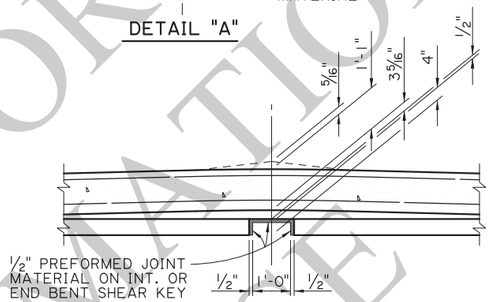

DETAIL B
SCALE : 1/2" = 1'-0"

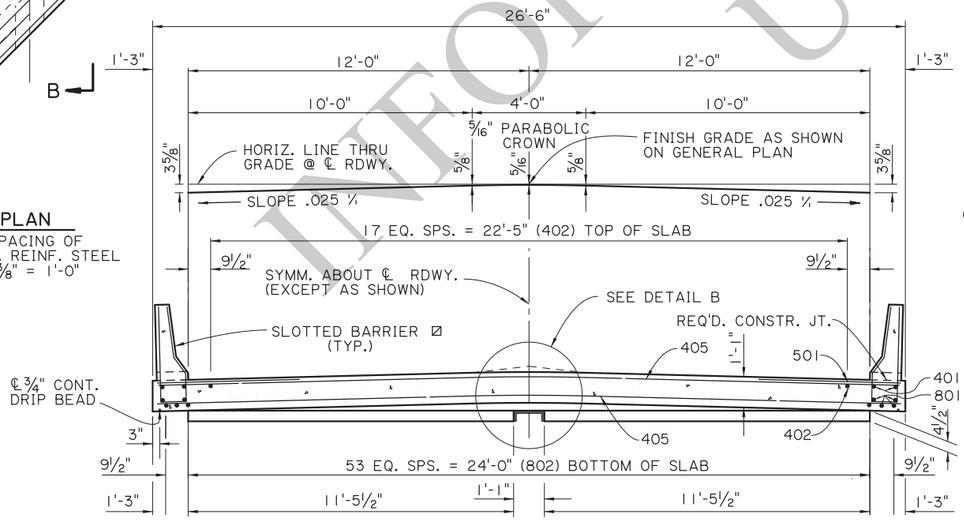

SECTION A-A
SCALE : 3/8" = 1'-0"

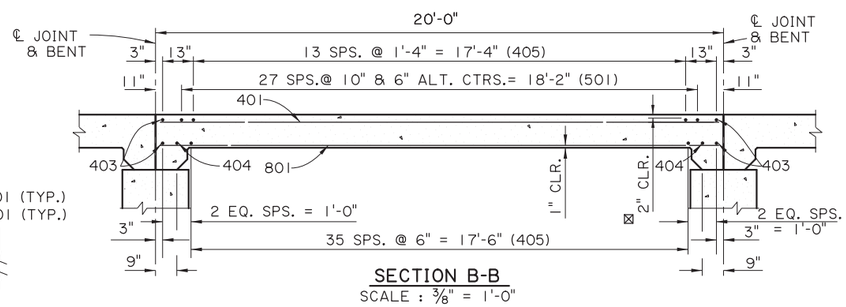

SECTION B-B
SCALE : 3/8" = 1'-0"

☑ STANDARD BARRIERS REQUIRED ON END SPANS.

☒ FOR BRIDGES IN DISTRICTS 04 & 05, MINIMUM CONCRETE COVER IN TOP OF SLAB SHALL BE 2 1/2".

ESTIMATED QUANTITIES (ONE SPAN)				
BAR	NO.	UNIT LENGTH	TOTAL LENGTH	LOCATION
801	8	19'-7"	156'-8"	LONGIT. BOT. OF SLAB
802	54	19'-5"	1048'-6"	LONGIT. BOT. OF SLAB
TOTAL NO. 8 BARS = 1205'-2" = 3218 LBS.				
501	56	5'-0"	280'-0"	TRANS. TOP OF SLAB
TOTAL NO. 5 BARS = 280'-0" = 292 LBS.				
401	4	19'-7"	78'-4"	LONGIT. TOP OF SLAB
402	18	19'-5"	349'-6"	LONGIT. TOP OF SLAB
403	4	35'-6"	142'-0"	TRANS. TOP & BOT. OF SLAB
404	2	36'-3"	72'-6"	TRANS. TOP & BOT. OF SLAB
405	58	37'-0"	2146'-0"	TRANS. TOP & BOT. OF SLAB
TOTAL NO. 4 BARS = 2788'-4" = 1863 LBS.				
TOTAL DEFORMED REINFORCING STEEL = 5373 LBS.				
CLASS A1 CONCRETE = 22.43 CU. YDS.				
CONCRETE RAILING (BARRIER TYPE) = 40.00 LIN. FT.				

AS-DESIGNED RATING		
VEHICLE	RATING FACTOR	NOTES
HL-93 (INV)	1.346	———
HL-93 (OPR)	1.745	———
LADV-11 (INV)	1.036	MAGNIFICATION FACTOR = 1.3

SPAN NOTES:

DESIGN SPECIFICATIONS:
AASHTO LRFD BRIDGE DESIGN SPECIFICATIONS, 4th EDITION, AND 2008 & 2009 INTERIMS.

DESIGN LOADS:
THE BRIDGE DECK IS DESIGNED FOR A FUTURE WEARING COURSE OF 19 PSF. THE LIVE LOAD IS HL-93, AND LADV-11 (LOUISIANA DESIGN VEHICLE LIVE LOAD 2011).

STRUCTURAL CONCRETE:
ALL CONCRETE SHALL BE CLASS A1. EXPOSED EDGES SHALL HAVE A 3/4" CHAMFER UNLESS SPECIFIED OTHERWISE. ALL BARRIER RAIL SURFACES ARE TO RECEIVE A CLASS 3 SPECIAL FINISH.

REINFORCING STEEL:
ALL REINFORCING SHALL BE GRADE 60; DIMENSIONS RELATING TO SPACING ARE TO BAR CENTERS, DIMENSIONS RELATING TO FABRICATION ARE OUT TO OUT OF BARS, UNLESS SPECIFIED OTHERWISE. ALL REINFORCING BARS SHALL BE PLACED TO PROVIDE A MINIMUM COVER OF ONE INCH FROM THE SURFACE OF THE DRAIN HOLES TO THE FACE OF THE BARS.

GUARD RAIL:
CONFORM TO PROJECT PLANS AND GUARD RAIL STANDARD PLANS.

PAYMENT:
ALL WORK WILL BE PAID FOR UNDER THE DESIGNATED BRIDGE SUPERSTRUCTURE AND SUBSTRUCTURE PAY ITEM AND IN ACCORDANCE WITH THE SPECIFICATIONS.

FOR INFORMATIONAL USE ONLY

SHEET NUMBER
PARISH | CONTROL SECTION | STATE PROJECT
DESIGN J. NAKHLEH | DETAIL D. HYMEL | REVIEW | SERIES # 2 OF 13
CHECK B. DELATTE | CHECK J. NAKHLEH
APPROVED BY CHIEF ENGINEER:
DATE: 12/10/2025
REVISION OR CHANGE ORDER DESCRIPTION | DATE | NO. | BY

SPAN (1 OF 2)
20'-0" CONCRETE SLAB SPAN
24'-0" CLEAR ROADWAY
45° CROSSING TWO WAY TANGENT

PSS-45-24-20SL

DOTD
LOUISIANA DEPARTMENT OF TRANSPORTATION & DEVELOPMENT

STANDARD PLAN

11/25/2025 11:51
IP_PWP:d1245749\SS4524span1(LRFD).dgn

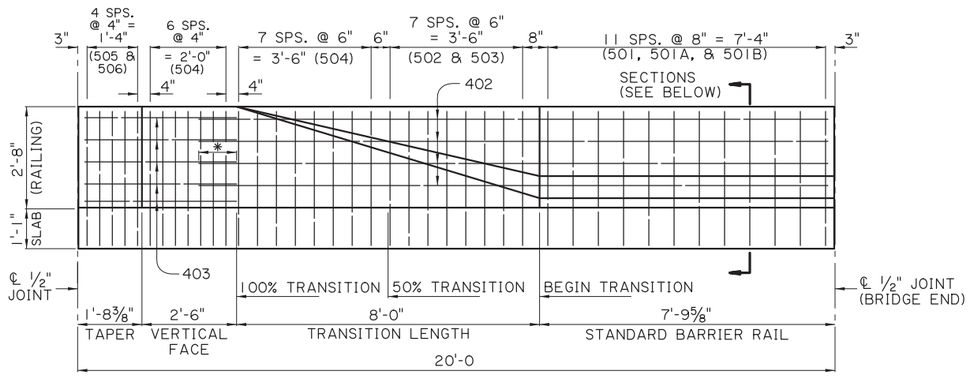

* 1'-0" (MIN.) SPLICE

BARRIER RAILING TRANSITION ELEVATION
(SHOWING BARRIER RAILING AT END OF BRIDGE)
SCALE: ½" = 1'-0"

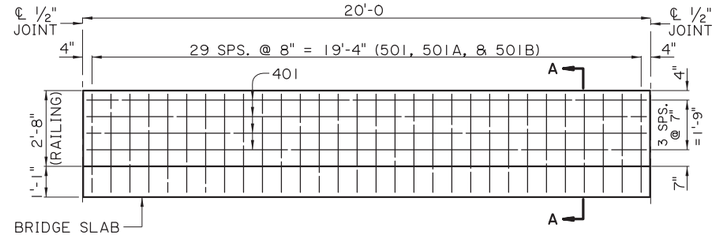

STANDARD BARRIER RAILING ELEVATION
(SHOWING BARRIER RAILING ALONG BRIDGE SLAB)
SCALE: ⅜" = 1'-0"

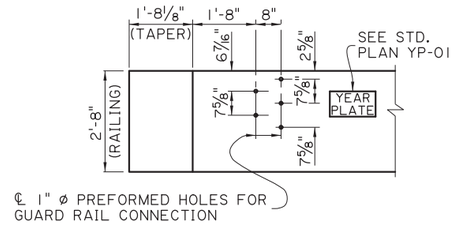

GUARD RAIL CONNECTION DETAIL
CONFORM TO GUARD RAIL STANDARD PALNS
SCALE: ½" = 1'-0"

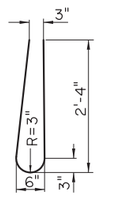

BARS 501
(4'-10" LONG)

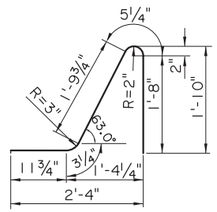

BARS 501A
(5'-2" LONG)

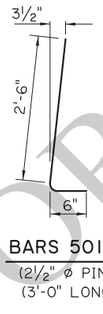

BARS 501B
(2½" ø PIN)
(3'-0" LONG)

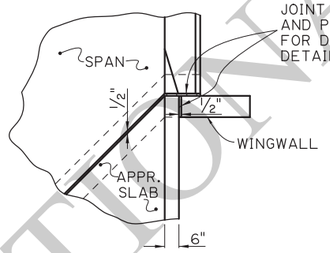

JOINT DETAIL
SCALE: ⅜" = 1'-0"

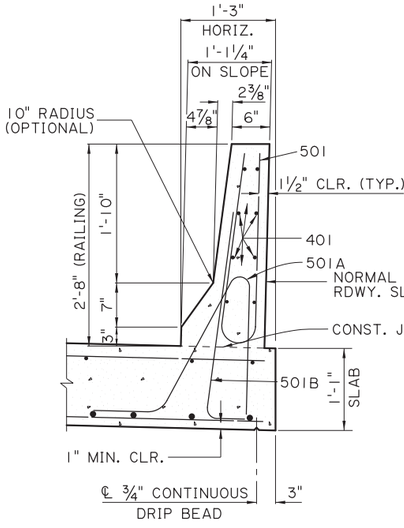

SECTION A-A
SCALE: 1" = 1'-0"

⚠ ON SLOPE

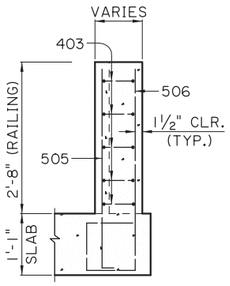

TAPER

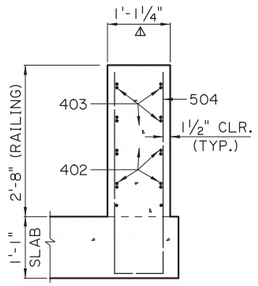

100 % TRANSITION

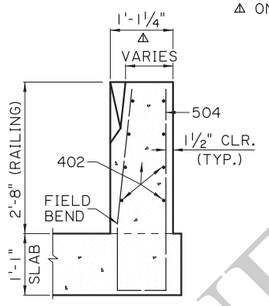

FROM 50% TO 100 % TRANSITION

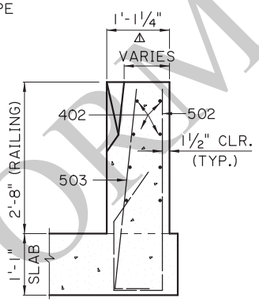

FROM BEGIN TO 50 % TRANSITION

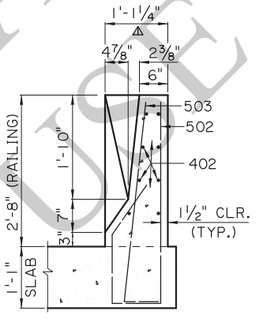

BEGIN TRANSITION

BARRIER RAILING TRANSITION SECTIONS

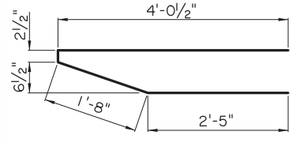

403
(2" ø PIN)

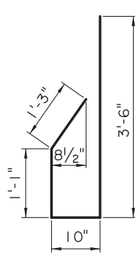

502
(2½" ø PIN)

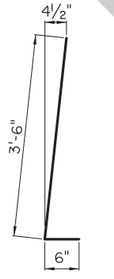

503
(2½" ø PIN)

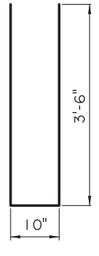

504
(2½" ø PIN)

505
(2½" ø PIN)

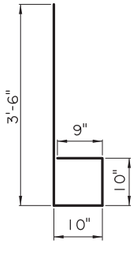

506
(2½" ø PIN)

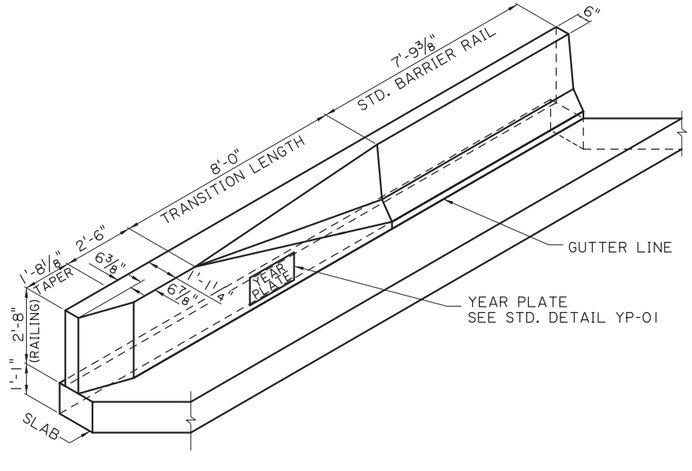

BARRIER RAILING TRANSITION SCHEMATIC
SCALE: ⅜" = 1'-0"

FOR INFORMATIONAL USE

SHEET NUMBER

PARISH | CONTROL SECTION | STATE PROJECT

DESIGN J. NAKHLEH | CHECK B. DELATTE | DETAIL D. HYMEL | CHECK J. NAKHLEH | REVIEW | SERIES # 3 OF 13

APPROVED BY CHIEF ENGINEER: DATE: 12/10/2025

NO. | DATE | REVISION OR CHANGE ORDER DESCRIPTION | BY

STATE OF LOUISIANA DEPARTMENT OF TRANSPORTATION AND DEVELOPMENT

SPAN (2 OF 2) 20'-0" CONCRETE BARRIER

24'-0" CLEAR ROADWAY
45° CROSSING TWO WAY TANGENT

PSS-45-24-20SL

DOTD LOUISIANA DEPARTMENT OF TRANSPORTATION & DEVELOPMENT

STANDARD PLAN

11/21/2025 09:11

IP_PWP:d1245749\SS4524span2(LRFD).dgn

11/21/2025 09:1

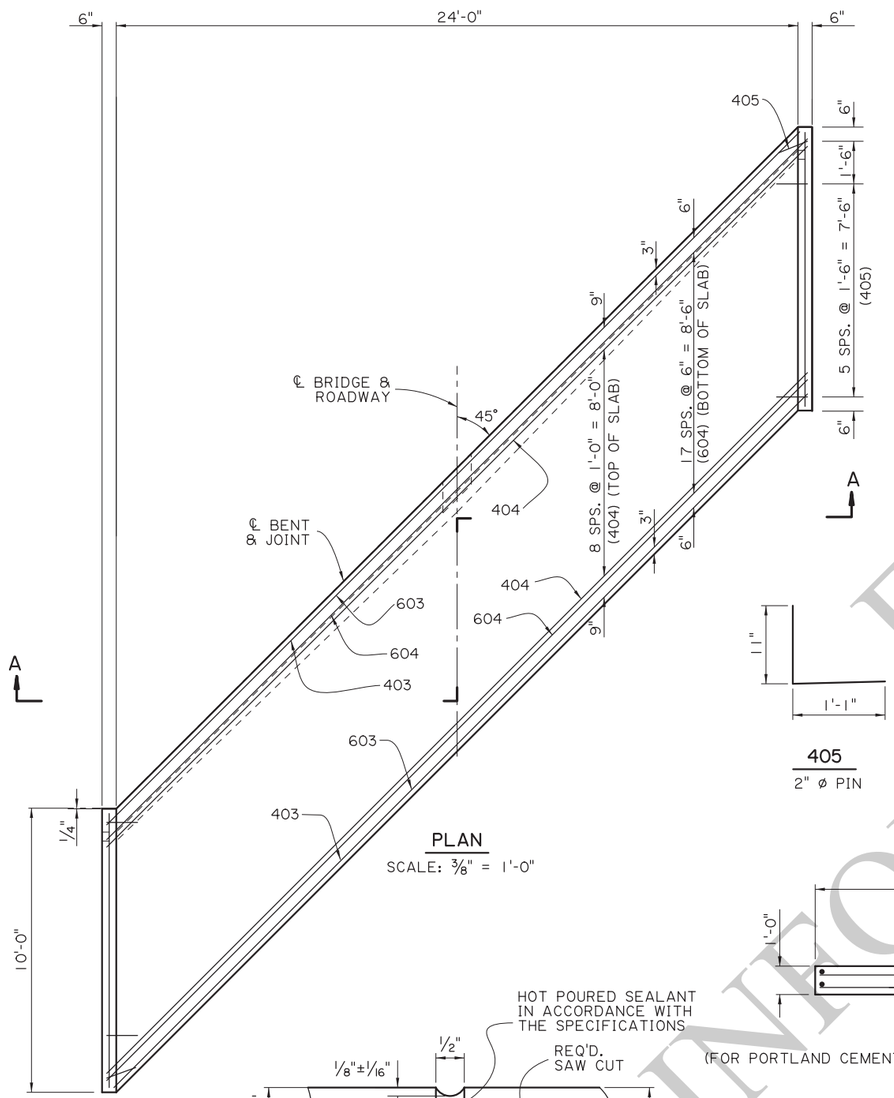

PLAN

SCALE: 3/8" = 1'-0"

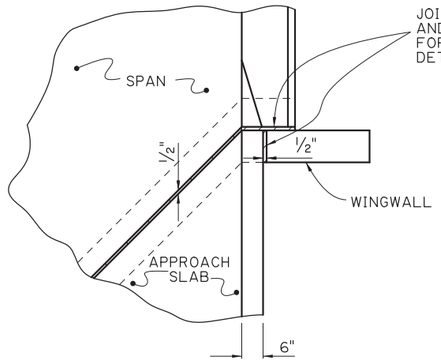

JOINT DETAIL

SCALE : 3/8" = 1'-0"

405

2" ø PIN

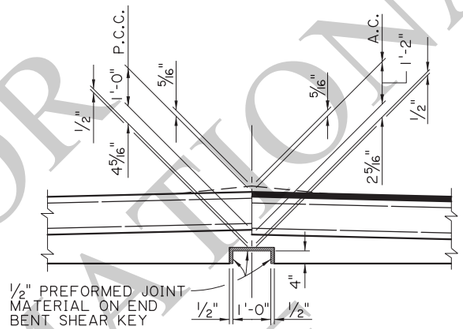

DETAIL A

SCALE : 1/2" = 1'-0"

ESTIMATED QUANTITIES (ONE SLAB)				
BAR	NO.	UNIT LENGTH	TOTAL LENGTH	LOCATION
601	2	9'-7"	19'-2"	LONGIT. BOT. OF SLAB
602	48	9'-6"	456'-0"	LONGIT. BOT. OF SLAB
603	2	34'-6"	69'-0"	TRANSV. BOT. OF SLAB
604	18	34'-10"	627'-0"	TRANSV. BOT. OF SLAB
TOTAL NO. 6 BARS = 1171'-2" = 1,759 LBS.				
401	4	9'-7"	38'-4"	LONGIT. TOP OF SLAB & CURB
402	24	9'-6"	228'-0"	LONGIT. TOP OF SLAB
403	2	34'-6"	69'-0"	TRANSV. TOP OF SLAB
404	9	34'-10"	313'-6"	TRANSV. TOP OF SLAB
405	14	2'-0"	28'-0"	DOWELS IN CURB
TOTAL NO. 4 BARS = 676'-10" = 452 LBS.				
⊙ TOTAL DEFORMED REINFORCING STEEL = 2,211 LBS.				
CONCRETE APPROACH SLAB = 27.78 SQ. YDS.				
⊙ ⊠ SUPERPAVE ASPHALTIC CONCRETE = 2.5 TONS				
⊙ ⊠ SAW CUT & SEAL = 33 LIN. FT.				

⊙ TO BE PAID FOR UNDER ITEM CONCRETE APPROACH SLABS.

⊠ REQUIRED WHEN APPROACH SLAB IS ADJACENT TO SUPERPAVE ASPHALTIC CONCRETE PAVEMENT.

APPROACH SLAB NOTES:

DESIGN SPECIFICATIONS: AASHTO LRFD BRIDGE DESIGN SPECIFICATIONS, 4th EDITION, WITH 2008 & 2009 INTERIMS.

STRUCTURAL CONCRETE: ALL CONCRETE SHALL BE CLASS A1. EXPOSED EDGES SHALL HAVE A 3/4" CHAMFER, UNLESS SPECIFIED OTHERWISE.

REINFORCING STEEL: ALL REINFORCING STEEL SHALL BE GRADE 60. DIMENSIONS RELATING TO THE FABRICATION ARE OUT-TO-OUT OF BARS, UNLESS SPECIFIED OTHERWISE. DIMENSIONS RELATING TO SPACING ARE TO BAR CENTERS, UNLESS SPECIFIED OTHERWISE.

BEDDING MATERIAL: FOR DETAILS OF BEDDING MATERIAL AND UNDERDRAINS SEE APPROACH SLAB STANDARD DETAILS.

SAWING & SEALING: THE ASPHALT CONCRETE SHALL BE SAW CUT AT THE END OF THE CONCRETE APPROACH SLAB THE ENTIRE ROADWAY WIDTH AND SEALED WHICH WILL BE PAID FOR UNDER THE DESIGNATED ROADWAY PAY ITEM.

PAYMENT: ALL OTHER WORK WILL BE PAID FOR UNDER THE DESIGNATED BRIDGE CONCRETE APPROACH SLAB PAY ITEM AND IN ACCORDANCE WITH THE SPECIFICATIONS.

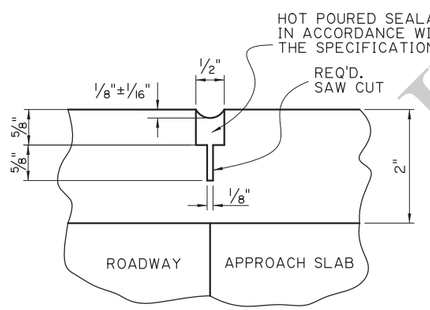

SAWING & SEALING ⊙ JOINT DETAIL

N.T.S.

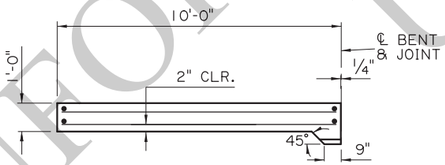

(FOR PORTLAND CEMENT CONCRETE ROADWAY PAVEMENT)

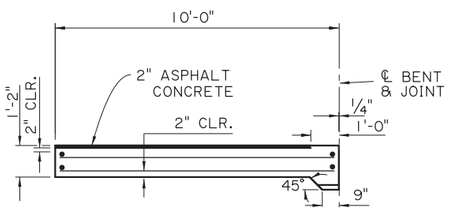

(FOR ASPHALT CONCRETE ROADWAY PAVEMENT)

SECTION ALONG ℄ ROADWAY

SCALE : 3/8" = 1'-0"

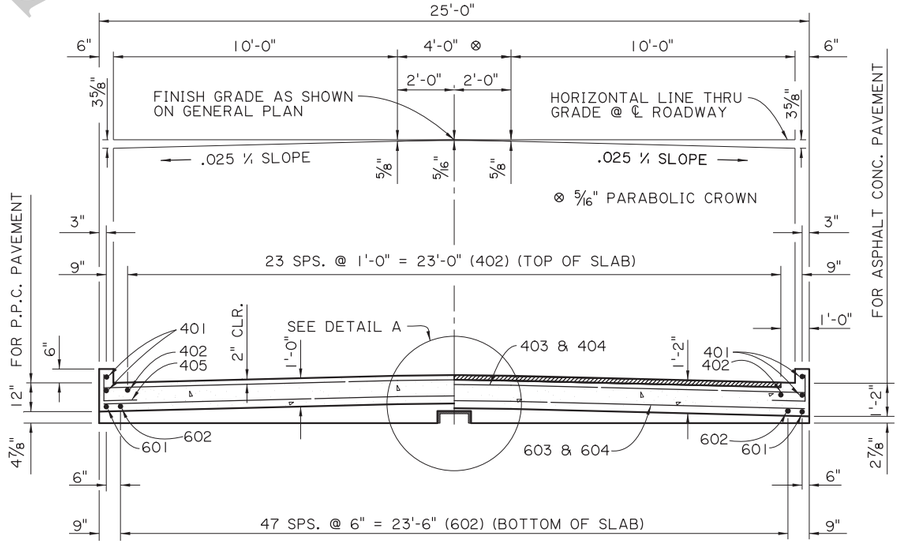

SECTION A-A

SCALE: 3/8" = 1'-0"

FOR INFORMATIONAL USE

SHEET NUMBER		
PARISH	CONTROL SECTION	STATE PROJECT
DESIGN J. NAKHLEH / CHECK B. DELATTE	DETAIL D. HYMEL / CHECK J. NAKHLEH	REVIEW SERIES # 4 OF 13

APPROVED BY CHIEF ENGINEER: DATE: 12/10/2025

NO.	DATE	REVISION OR CHANGE ORDER DESCRIPTION	BY

STATE OF LOUISIANA — DEPARTMENT OF TRANSPORTATION AND DEVELOPMENT

APPROACH SLAB
10'-0" CONCRETE APPROACH SLAB
24'-0" CLEAR ROADWAY
45° CROSSING TWO WAY TANGENT

PSS-45-24-20SL

DOTD LOUISIANA DEPARTMENT OF TRANSPORTATION & DEVELOPMENT

STANDARD PLAN

IP_PWP:d1245749\SS4524aprslab(LRFD).dgn

CHECK PRINTS
11/21/2025 09:1
IP_PWP:d1245749\SS4524altbent1a(LRFD).dgn

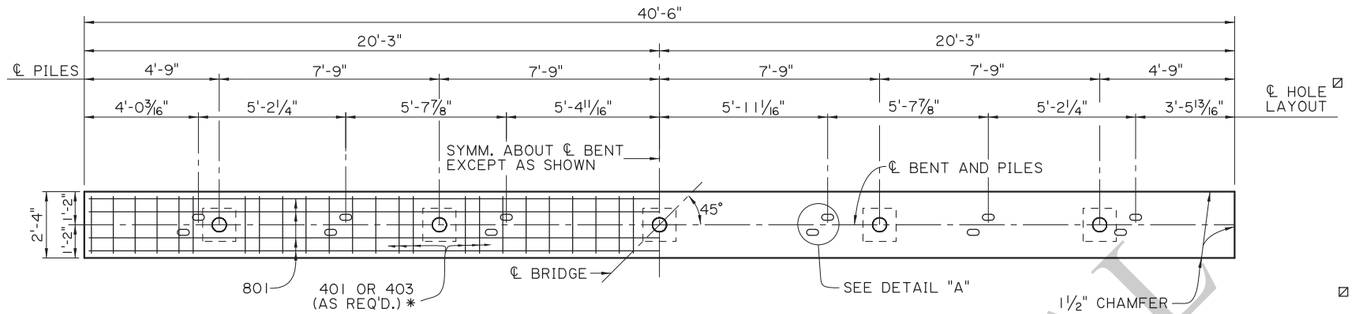

* USE 403 BARS AT HOLES ONLY

PLAN - INTERMEDIATE BENT
SCALE 3/8" = 1'-0"

☑ HOLES ARE OPTIONAL AT EXPANSION ENDS.

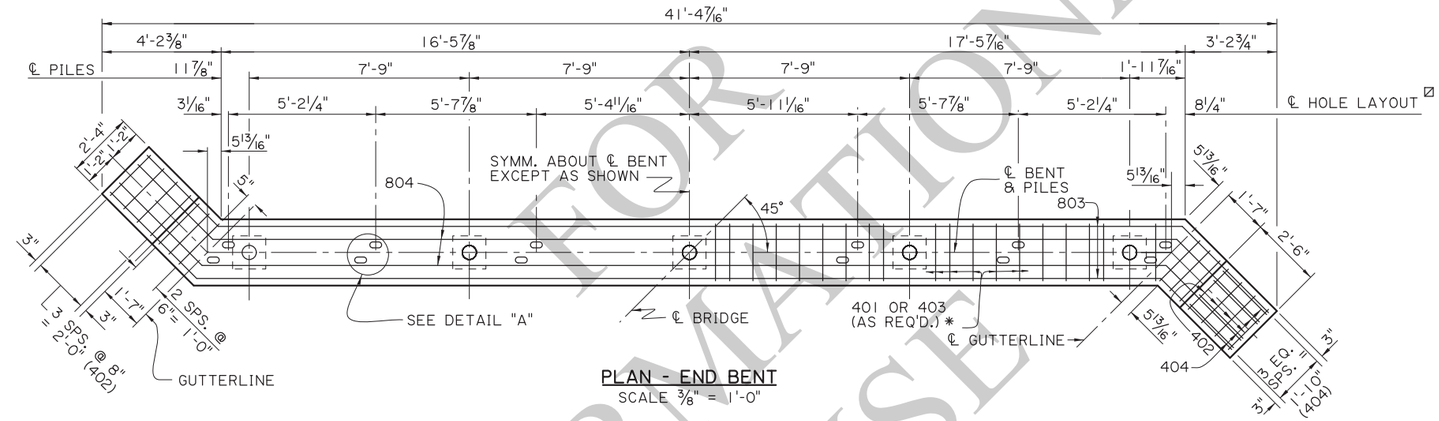

PLAN - END BENT
SCALE 3/8" = 1'-0"

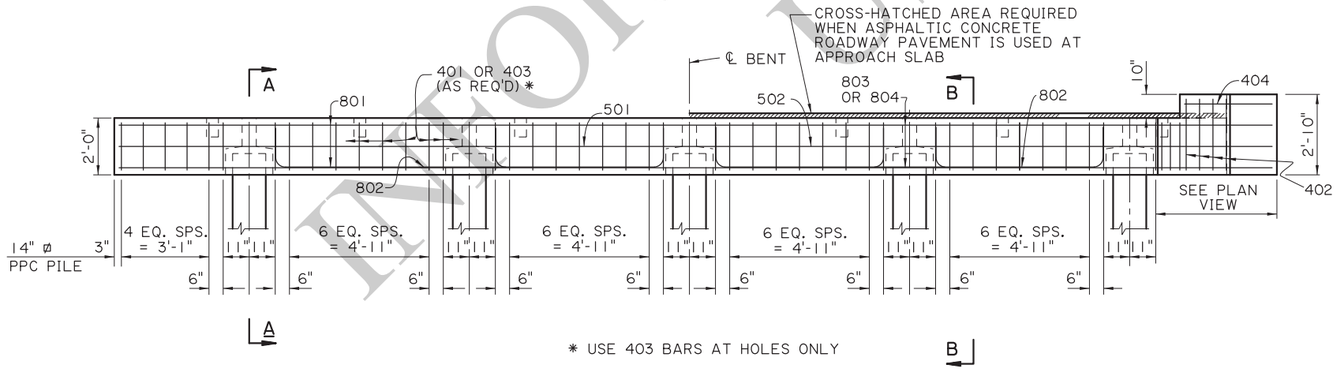

* USE 403 BARS AT HOLES ONLY

HALF ELEVATION - INTERMEDIATE BENT
SCALE 3/8" = 1'-0"

HALF ELEVATION - END BENT
SCALE 3/8" = 1'-0"

FOR INFORMATIONAL USE

SHEET NUMBER

PARISH	CONTROL SECTION	STATE PROJECT

DESIGN	B. DELATTE	DETAIL	D. HYMEL	REVIEW	SERIES # 5 OF 13
CHECK	H. THOMAS	CHECK	J. NAKHLEH		

APPROVED BY CHIEF ENGINEER:
DATE: 12/10/2025

NO.	DATE	REVISION OR CHANGE ORDER DESCRIPTION	BY

ALTERNATE BENTS (1 OF 2)
PRECAST CONCRETE BENTS
24'-0" CLEAR ROADWAY
45° CROSSING TWO WAY TANGENT

PSS-45-24-20SL

DOTD
LOUISIANA DEPARTMENT OF TRANSPORTATION & DEVELOPMENT

STANDARD PLAN

ALTERNATE BENT NOTES:

DESIGN SPECIFICATIONS: AASHTO LRFD BRIDGE DESIGN SPECIFICATIONS, 4th EDITION, WITH 2008 & 2009 INTERIMS.
DESIGN LOAD: LIVE LOAD IS HL-93, AND LADV-11 (LOUISIANA DESIGN VEHICLE LIVE LOAD 2011).
STRUCTURAL CONCRETE: ALL CONCRETE SHALL BE CLASS P1. STEEL SIDE FORMS AND STEEL OR CONCRETE BOTTOM FORMS SHALL BE USED FOR PRECAST COMPONENTS. EXPOSED EDGES SHALL HAVE A ¾" CHAMFER UNLESS SPECIFIED OTHERWISE. ALL SURFACES SHALL RECEIVE A CLASS I ORDINARY SURFACE FINISH UPON REMOVAL OF THE FORMS. ALL EXPOSED FACES OF WINGWALLS AND ENDS OF CAPS SHALL RECEIVE A CLASS 3 SPECIAL SURFACE FINISH.
REINFORCING STEEL: ALL REINFORCING SHALL BE GRADE 60. DIMENSIONS RELATING TO FABRICATION ARE OUT TO OUT OF BARS, UNLESS SPECIFIED OTHERWISE. DIMENSIONS RELATING TO SPACING ARE TO BAR CENTERS, UNLESS SPECIFIED OTHERWISE.
GROUT: THE GROUT SHALL BE AN APPROVED FLOWABLE NON-SHRINK GROUT LISTED ON AML. THE GROUT SHALL BE TESTED FOR ACCEPTANCE PRIOR TO USAGE. SURFACES SHALL BE THOROUGHLY SATURATED WITH WATER BY FLOODING THE VOID FOR APPROXIMATELY 5 MINUTES IMMEDIATELY BEFORE THE GROUT IS PLACED. ONLY POTABLE WATER SHALL BE USED FOR SATURATION AND MIXING PURPOSES.
PRECAST UNITS: THE PLANS FOR AN ONGOING OPERATION OF FABRICATING FACILITIES SHALL BE APPROVED BY THE DEPARTMENT. EACH UNIT SHALL HAVE THE FABRICATOR'S MARK AND UNIQUE NUMBER, MEETING THE APPROVAL OF THE ENGINEER, STAMPED OR SCRIBED IN THE PLASTIC CONCRETE. ALL UNITS SHALL BE HELD AT THE PLANT FOR A MINIMUM OF 10 DAYS AFTER CASTING. THE CONCRETE SHALL REACH A MINIMUM STRENGTH OF 3,000 PSI BEFORE HANDLING IS PERMITTED. THE LIFTING INSERTS SHALL BE 1" TYPE S INSERTS AS MANUFACTURED BY DAYTON-SUPERIOR CORPORATION OR AN APPROVED EQUAL. EACH INSERT SHALL HAVE A MINIMUM LOAD CAPACITY OF 10,000 POUNDS. FOUR INSERTS WITH 1" ø x 5" LONG COIL BOLTS SHALL BE PLACED IN THE TOP OF THE UNITS AND LOCATED AT A DISTANCE 21% OF ITS LENGTH (+/- 6") FROM EACH END AND 6" FROM THE EDGES. INSERT HOLES SHALL BE GROUT FILLED AFTER PLACEMENT OF THE UNIT. AT THE CONTRACTOR'S OPTION, A SLING OF SUFFICIENT CAPACITY MAY BE USED FOR LIFTING, PROVIDED THE SAME PICKUP LOCATIONS FROM THE ENDS ARE USED.
PRECAST CONCRETE PILES: CONFORM TO PILE STANDARD PLAN AND PROJECT PLANS FOR FABRICATION AND INSTALLATION. IF TOP CENTER OF DRIVEN PILE IS OUTSIDE OF SPECIFIED HORIZONTAL TOLERANCES BUT WITHIN SPECIFIED VERTICAL TOLERANCES, PROVIDE CAST-IN-PLACE BENT CAP IN ACCORDANCE WITH THIS STANDARD PLAN. PILES WILL BE PAID FOR UNDER THE DESIGNATED PILE PAY ITEMS.
PAYMENT: ALL OTHER WORK WILL BE PAID FOR UNDER THE DESIGNATED BRIDGE SUPERSTRUCTURE AND SUBSTRUCTURE PAY ITEM AND IN ACCORDANCE WITH THE SPECIFICATIONS.

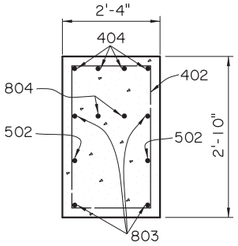

END ELEVATION
SCALE: ¾" = 1'-0"

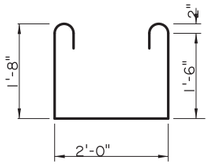

403
2" ø PIN

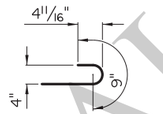

180° HOOK FOR
403 BARS
3" ø PIN

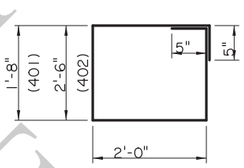

401 & 402
2" ø PIN

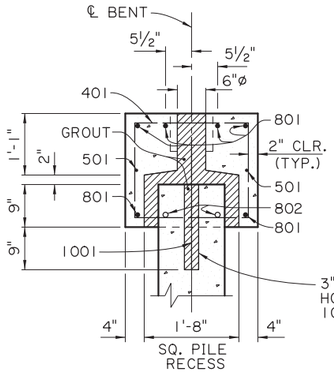

SECTION A-A
SCALE: ¾" = 1'-0"

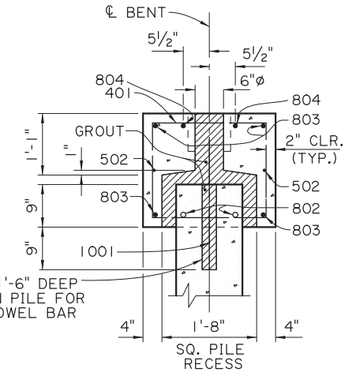

SECTION B-B
SCALE: ¾" = 1'-0"
(WHEN PORTLAND CEMENT CONCRETE ROADWAY PAVEMENT IS USED AT APPROACH SLAB)

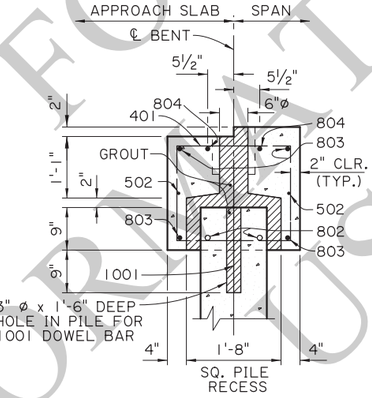

SECTION B-B
SCALE: ¾" = 1'-0"
(WHEN ASPHALTIC CONCRETE ROADWAY PAVEMENT IS USED AT APPROACH SLAB)

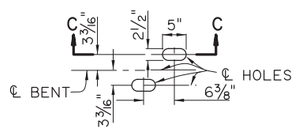

DETAIL A
SCALE ¾" = 1'-0"

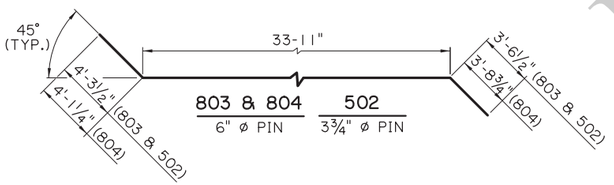

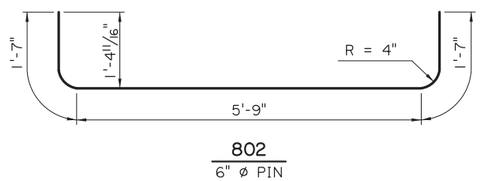

802
6" ø PIN

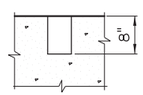

SECTION C-C
SCALE ¾" = 1'-0"

ESTIMATED QUANTITIES (ONE INTER. BENT)

BAR	NO.	UNIT LENGTH	TOTAL LENGTH	LOCATION
1001	5	2'-4"	11'-8"	DOWELS IN PILES
TOTAL NO. 10 BARS = 11'-8" = 50 LBS.				
801	6	40'-2"	241'-0"	LONGIT. IN CAP
802	8	8'-11"	71'-4"	LONGIT. IN CAP BTW. PILES
TOTAL NO. 8 BARS = 312'-4" = 834 LBS.				
501	2	40'-2"	80'-4"	LONGIT. IN CAP
TOTAL NO. 5 BARS = 80'-4" = 84 LBS.				
401	44	8'-2"	359'-4"	STIRRUPS IN CAP
403	6	6'-6"	39'-0"	STIRRUPS IN CAP
TOTAL NO. 4 BARS = 398'-4" = 266 LBS.				
TOTAL DEFORMED REINFORCING STEEL = 1,234 LBS.				
TOTAL CLASS P1 CONCRETE = 6.45 CU. YDS.				
MAX. PILE LOAD: SERVICE DEAD LOAD = 20 TONS SERVICE LIVE LOAD = 33 TONS FACTORED TOTAL LOAD = 73 TONS				
TOTAL GROUT FOR PILE RECESSES = 0.36 CU. YDS.				

ESTIMATED QUANTITIES (ONE END BENT)

BAR	NO.	UNIT LENGTH	TOTAL LENGTH	LOCATION
1001	5	2'-4"	11'-8"	DOWELS IN PILES
TOTAL NO. 10 BARS = 11'-8" = 50 LBS.				
802	8	8'-11"	71'-4"	LONGIT. IN CAP BTW. PILES
803	4	41'-9"	167'-0"	LONGIT. IN CAP
804	2	41'-9"	83'-6"	LONGIT. IN CAP
TOTAL NO. 8 BARS = 321'-10" = 859 LBS.				
502	2	42'-1"	84'-2"	LONGIT. IN CAP
TOTAL NO. 5 BARS = 84-2" = 88 LBS.				
401	40	8'-2"	326'-8"	STIRRUPS IN CAP
402	8	9'-10"	78'-8"	STIRRUPS IN WINGWALL
403	6	6'-6"	39'-0"	STIRRUPS IN CAP
404	8	2'-2"	17'-4"	LONGIT. IN WINGWALL
TOTAL NO. 4 BARS = 461'-8" = 308 LBS.				
TOTAL DEFORMED REINFORCING STEEL = 1,305 LBS.				
⊗ TOTAL CLASS P1 CONCRETE = 7.09 CU. YDS.				
MAX. PILE LOAD: SERVICE DEAD LOAD = 20 TONS SERVICE LIVE LOAD = 33 TONS FACTORED TOTAL LOAD = 73 TONS				
TOTAL GROUT FOR PILE RECESSES = 0.36 CU. YDS.				

⊗ ADD 0.27 CU. YDS. OF CLASS P1 CONCRETE PER BENT WHEN ASPHALTIC CONCRETE ROADWAY PAVEMENT IS USED AT APPROACH SLAB.

AS-DESIGNED RATING

VEHICLE	RATING FACTOR	NOTES
HL-93 (INV)	1.715	———
HL-93 (OPR)	2.224	———
LADV-11 (INV)	1.320	MAGNIFICATION FACTOR = 1.3

FOR INFORMATIONAL USE

SHEET NUMBER
PARISH | CONTROL SECTION | STATE PROJECT
DESIGN J. NAKHLEH | CHECK H. THOMAS | DETAIL D. HYMEL | CHECK J. NAKHLEH | REVIEW | SERIES # 6 OF 13
APPROVED BY CHIEF ENGINEER:
DATE: 12/10/2025
NO. | DATE | REVISION OR CHANGE ORDER DESCRIPTION | BY

ALTERNATE BENTS (2 OF 2)
PRECAST CONCRETE BENTS
24'-0" CLEAR ROADWAY
45° CROSSING TWO WAY TANGENT
PSS-45-24-20SL

DOTD
LOUISIANA DEPARTMENT OF TRANSPORTATION & DEVELOPMENT
STANDARD PLAN

11/25/2025 10:0
IP_PWP:d1245749\SS4524altbent1b(LRFD).dgn

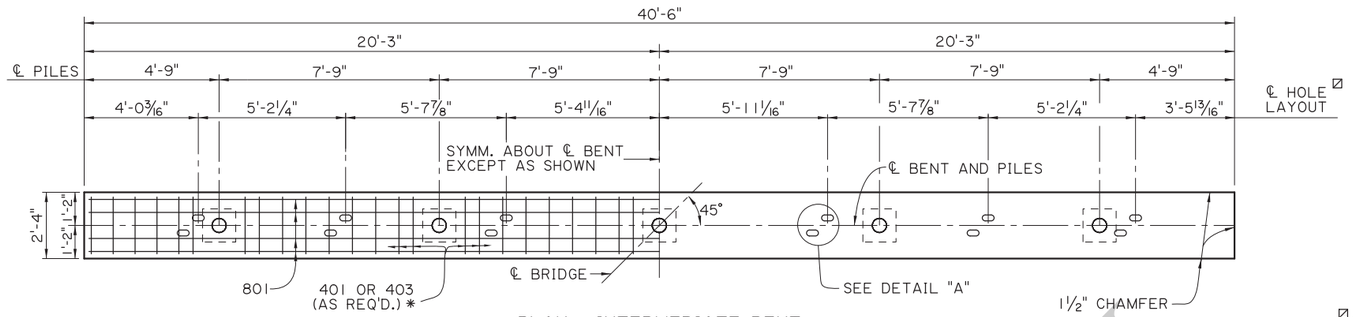

* USE 403 BARS AT HOLES ONLY

PLAN - INTERMEDIATE BENT
SCALE 3/8" = 1'-0"

☑ HOLES ARE OPTIONAL AT EXPANSION ENDS.

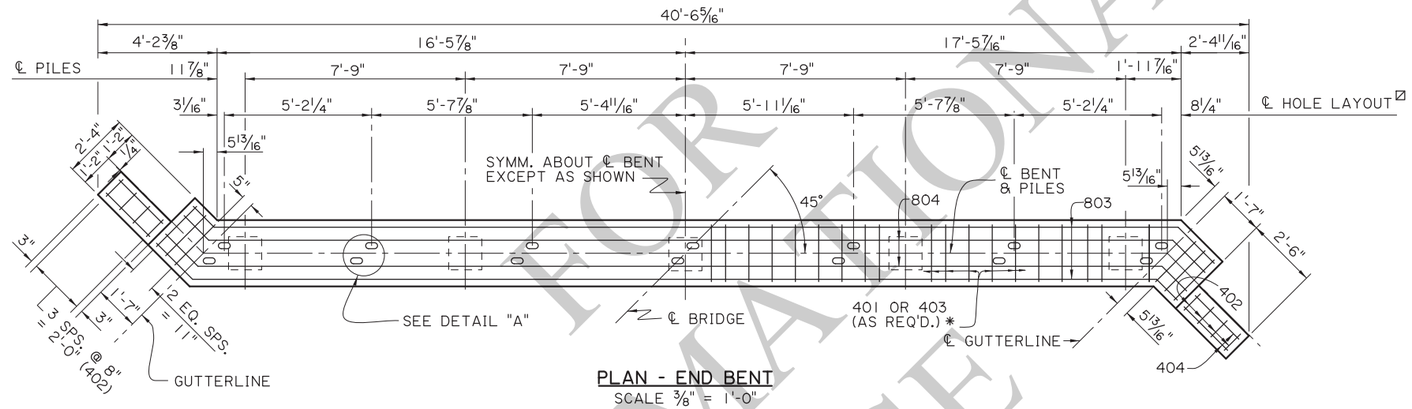

PLAN - END BENT
SCALE 3/8" = 1'-0"

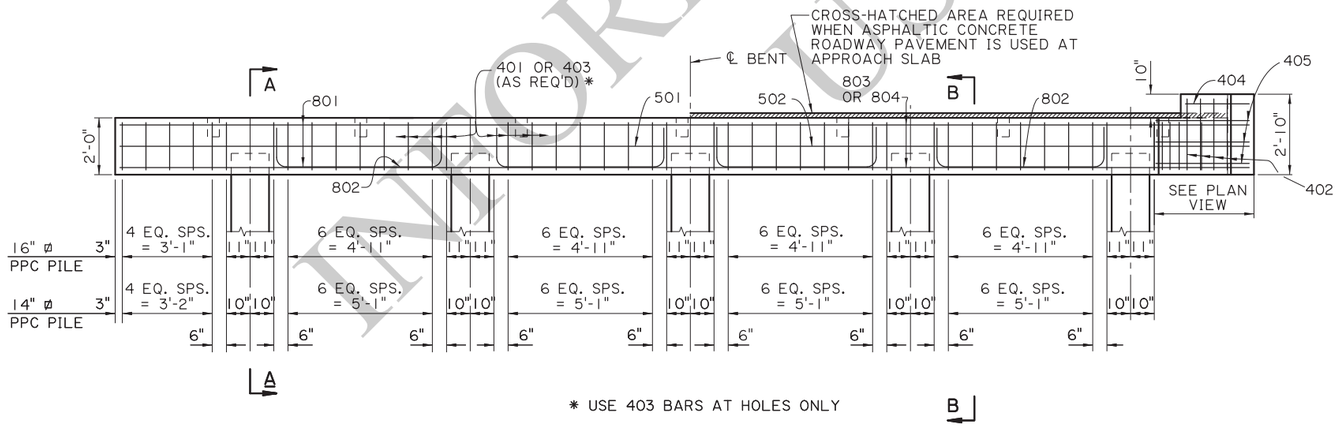

* USE 403 BARS AT HOLES ONLY

HALF ELEVATION - INTERMEDIATE BENT
SCALE 3/8" = 1'-0"

HALF ELEVATION - END BENT
SCALE 3/8" = 1'-0"

FOR INFORMATIONAL USE

SHEET NUMBER

PARISH | CONTROL SECTION | STATE PROJECT

DESIGN J. NAKHLEH | CHECK H. THOMAS | DETAIL D. HYMEL | CHECK J. NAKHLEH | REVIEW | SERIES # 7 OF 13

APPROVED BY CHIEF ENGINEER: DATE: 12/10/2025

REVISION OR CHANGE ORDER DESCRIPTION | BY | DATE | NO.

STATE OF LOUISIANA DEPARTMENT OF TRANSPORTATION AND DEVELOPMENT

ALTERNATE BENTS (1 OF 2) CAST-IN-PLACE CONCRETE BENTS

24'-0" CLEAR ROADWAY
45° CROSSING TWO WAY TANGENT

PSS-45-24-20SL

DOTD
LOUISIANA DEPARTMENT OF TRANSPORTATION & DEVELOPMENT

STANDARD PLAN

11/21/2025 09:3

IP_PWP:d1245749\SS4524altbent2a(LRFD).dgn

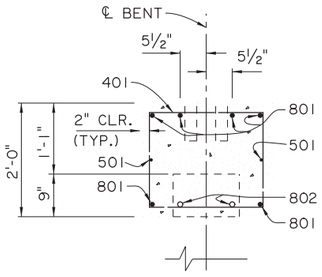

SECTION A-A
SCALE: ¾" = 1'-0"

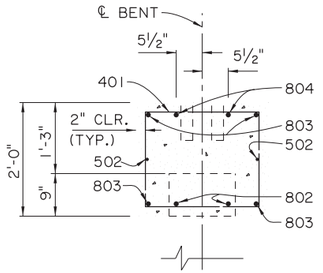

SECTION B-B
SCALE: ¾" = 1'-0"
(WHEN PORTLAND CONCRETE ROADWAY PAVEMENT IS USED AT APPROACH SLAB)

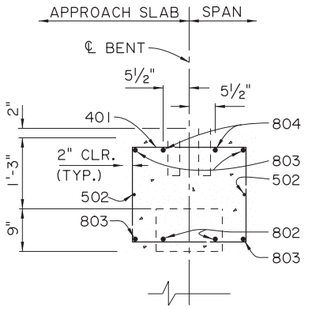

SECTION B-B
SCALE: ¾" = 1'-0"
(WHEN ASPHALTIC CONCRETE ROADWAY PAVEMENT IS USED AT APPROACH SLAB)

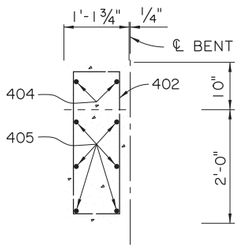

END ELEVATION
SCALE: ¾" = 1'-0"

ALTERNATE BENT NOTES:

DESIGN SPECIFICATIONS: AASHTO LRFD BRIDGE DESIGN SPECIFICATIONS, 4th EDITION, WITH 2008 & 2009 INTERIMS.

DESIGN LOAD: LIVE LOAD IS HL-93, AND LADV-11 (LOUISIANA DESIGN VEHICLE LIVE LOAD 2011).

STRUCTURAL CONCRETE: ALL CONCRETE SHALL BE CLASS A1. EXPOSED EDGES SHALL HAVE A ¾" CHAMFER UNLESS SPECIFIED OTHERWISE. ALL EXPOSED FACES OF WINGWALLS AND ENDS OF CAPS SHALL RECEIVE A SURFACE FINISH AS PER THE SPECIFICATIONS.

REINFORCING STEEL: ALL REINFORCING SHALL BE GRADE 60. DIMENSIONS RELATING TO FABRICATION ARE OUT TO OUT OF BARS, UNLESS SPECIFIED OTHERWISE. DIMENSIONS RELATING TO SPACING ARE TO BAR CENTERS, UNLESS SPECIFIED OTHERWISE.

PRECAST CONCRETE PILES: CONFORM TO PILE STANDARD PLAN AND PROJECT PLANS FOR FABRICATION AND INSTALLATION. PILES WILL BE PAID FOR UNDER THE DESIGNATED PILE PAY ITEMS.

PAYMENT: ALL OTHER WORK WORK WILL BE PAID FOR UNDER THE DESIGNATED BRIDGE SUPERSTRUCTURE AND SUBSTRUCTURE PAY ITEM AND IN ACCORDANCE WITH THE SPECIFICATIONS.

AS-DESIGNED RATING		
VEHICLE	RATING FACTOR	NOTES
HL-93 (INV)	1.436	———
HL-93 (OPR)	1.864	———
LADV-11 (INV)	1.106	MAGNIFICATION FACTOR = 1.3

ESTIMATED QUANTITIES (ONE INTER. BENT)				
BAR	NO.	UNIT LENGTH	TOTAL LENGTH	LOCATION
801	6	40'-2"	241'-0"	LONGIT. IN CAP
802	8	8'-7"	68'-8"	LONGIT. IN CAP BTW. PILES
TOTAL NO. 8 BARS = 309'-8" = 827 LBS.				
501	2	40'-2"	80'-4"	LONGIT. IN CAP
TOTAL NO. 5 BARS = 80'-4" = 84 LBS.				
401	40	8'-2"	326'-8"	STIRRUPS IN CAP
403	8	6'-6"	52'-0"	STIRRUPS IN CAP
TOTAL NO. 4 BARS = 378'-8" = 253 LBS.				
TOTAL DEFORMED REINFORCING STEEL = 1164 LBS.				
⊠ TOTAL CLASS A1 CONCRETE = 6.73 CU. YDS.				
MAX. PILE LOAD: SERVICE DEAD LOAD = 21 TONS SERVICE LIVE LOAD = 33 TONS FACTORED TOTAL LOAD = 74 TONS				

⊠ 16" ø PPC PILES USED FOR ESTIMATING PURPOSES ONLY. (ADD 0.06 CU. YDS. OF CLASS A1 CONCRETE WHEN 14" ø PPC PILES ARE USED).

ESTIMATED QUANTITIES (ONE END BENT)				
BAR	NO.	UNIT LENGTH	TOTAL LENGTH	LOCATION
802	8	8'-7"	68'-8"	LONGIT. IN CAP BTW. PILES
803	4	36'-8"	146'-8"	LONGIT. IN CAP
804	2	36'-8"	73'-4"	LONGIT. IN CAP
TOTAL NO. 8 BARS = 288'-8" = 771 LBS.				
502	2	36'-8"	73'-4"	LONGIT. IN CAP
TOTAL NO. 5 BARS = 73'-4" = 76 LBS.				
401	36	8'-2"	294'-0"	STIRRUPS IN CAP
402	8	9'-10"	78'-8"	STIRRUPS IN WINGWALL
403	8	6'-6"	52'-0"	STIRRUPS IN CAP
404	4	2'-2"	8'-8"	LONGIT. IN WINGWALL
405	12	3'-11"	47'-0"	LONGIT. IN WINGWALL
TOTAL NO. 4 BARS = 480'-4" = 321 LBS.				
TOTAL DEFORMED REINFORCING STEEL = 1168 LBS.				
⊗ TOTAL CLASS A1 CONCRETE = 6.74 CU. YDS.				
MAX. PILE LOAD: SERVICE DEAD LOAD = 21 TONS SERVICE LIVE LOAD = 33 TONS FACTORED TOTAL LOAD = 74 TONS				

⊗ 16" ø PPC PILES USED FOR ESTIMATING PURPOSES ONLY. (ADD 0.06 CU. YDS. OF CLASS A1 CONCRETE WHEN 14" ø PPC PILES ARE USED).
ADD 0.27 CU. YDS. OF CLASS A1 CONCRETE PER BENT WHEN ASPHALTIC CONCRETE ROADWAY PAVEMENT IS USED AT APPROACH SLAB.

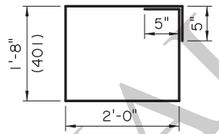

401
2" ø PIN

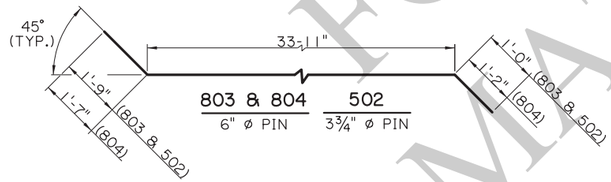

803 & 804 — 6" ø PIN
502 — 3¾" ø PIN

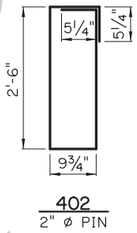

402
2" ø PIN

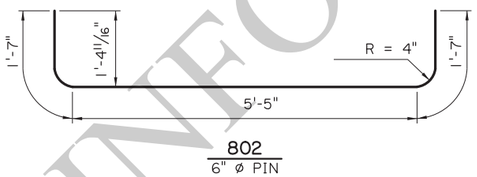

802
6" ø PIN

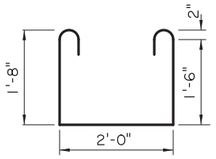

403
2" ø PIN

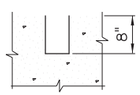

SECTION C-C
SCALE ¾" = 1'-0"

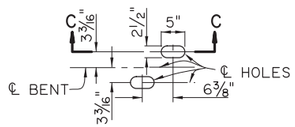

DETAIL A
SCALE ¾" = 1'-0"

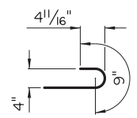

180° HOOK FOR 403 BARS
3" ø PIN

FOR INFORMATIONAL USE

SHEET NUMBER

PARISH | CONTROL SECTION | STATE PROJECT

DESIGN J. NAKHLEH | CHECK H. THOMAS | DETAIL D. HYMEL | CHECK J. NAKHLEH | REVIEW | SERIES # 8 OF 13

APPROVED BY CHIEF ENGINEER: DATE: 12/10/2025

NO.	DATE	REVISION OR CHANGE ORDER DESCRIPTION	BY

ALTERNATE BENTS (2 OF 2)
CAST-IN-PLACE CONCRETE BENTS
24'-0" CLEAR ROADWAY
45° CROSSING TWO WAY TANGENT
PSS-45-24-20SL

DOTD LOUISIANA DEPARTMENT OF TRANSPORTATION & DEVELOPMENT

STANDARD PLAN

IP_PWP:d1245749\SS4524altbent2b(LRFD).dgn
11/25/2025 10:0

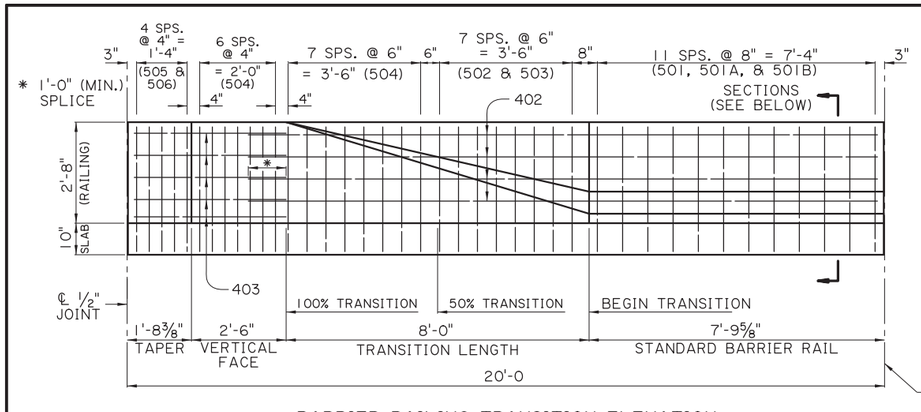

BARRIER RAILING TRANSITION ELEVATION
(SHOWING BARRIER RAILING AT END OF BRIDGE)
SCALE: ½" = 1'-0"

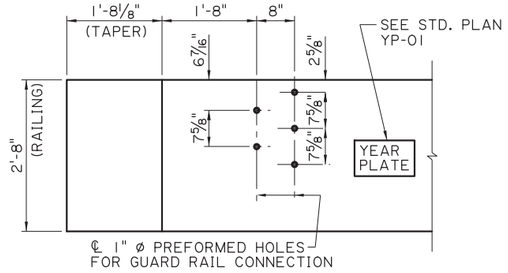

GUARD RAIL CONNECTION DETAIL
CONFORM TO GUARD RAIL STANDARD PLANS
SCALE : ¾" = 1'-0"

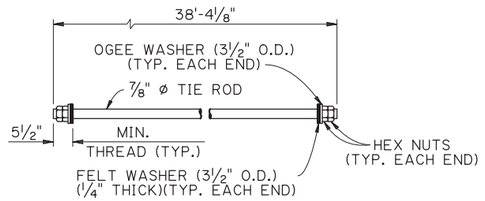

NOTE:

THE NUTS & WASHERS FOR THE TIE ROD SHALL BE ZINC COATED AND THE EXPOSED ENDS TO THE TIE RODS SHALL BE PAINTED WITH AN APPROVED COATING. AS A FINAL OPERATION THE CONTRACTOR SHALL BE REQUIRED TO TORQUE THE INSTALLED TIE ROD TO 170 FT. LBS. JUST PRIOR TO PAINTING. ALL EXPOSED ENDS SHALL BE PAINTED WITH AN APPROVED COATING AFTER STRESSING. ONE (1) MECHANICAL SPLICE MAY BE USED IN SPLICING THE ⅞" ø TIE ROD. THE SPLICE SHALL DEVELOP AT LEAST 125% OF THE SPECIFIED YIELD STRENGTH OF THE TIE ROD IN TENSION. THE MECHANICAL SPLICE SHALL BE ZINC COATED OR PAINTED WITH AN APPROVED COLD GALVANIZING REPAIR COMPOUND FROM AML PRIOR TO PLACING THE TIE ROD IN THE STRUCTURE.

DETAILS OF TIE ROD

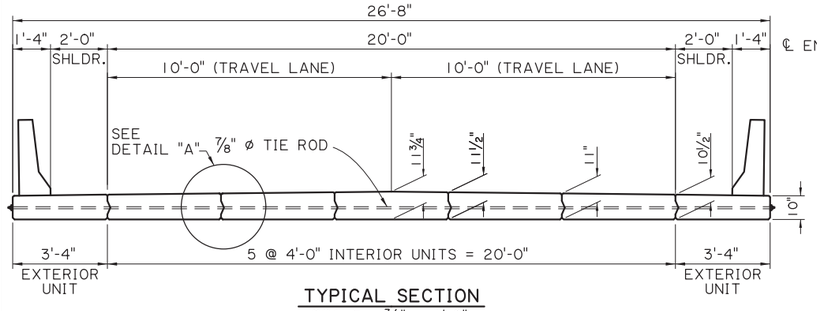

TYPICAL SECTION
SCALE : ⅜" = 1'-0"

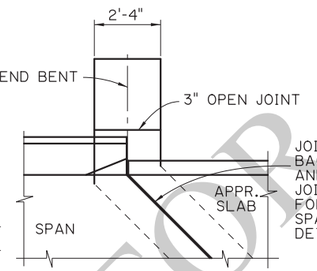

JOINT DETAIL
N.T.S.

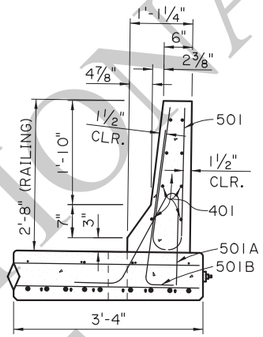

SECTION A-A
SCALE : ¾" = 1'-0"

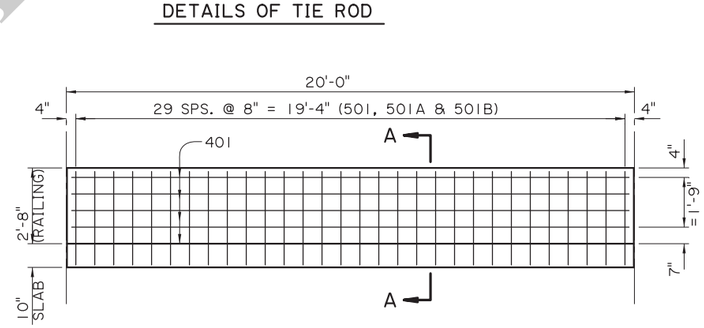

STANDARD BARRIER RAILING ELEVATION
(SHOWING BARRIER RAILING ALONG BRIDGE END)
SCALE : ⅜" = 1'-0"

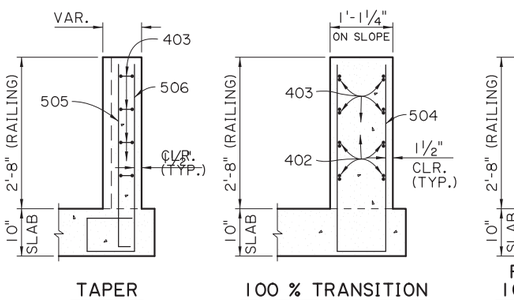

BARRIER RAILING TRANSITION SECTIONS
SCALE : ¾" = 1'-0"

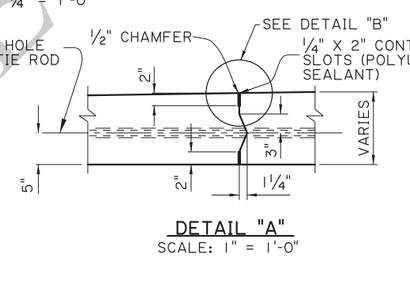

DETAIL "A"
SCALE: 1" = 1'-0"

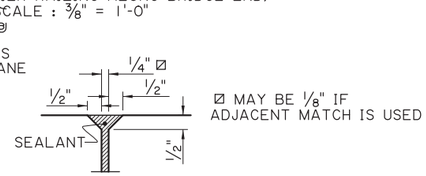

⌀ MAY BE ⅛" IF ADJACENT MATCH IS USED

DETAIL "B"
SCALE: 1" = 1'-0"

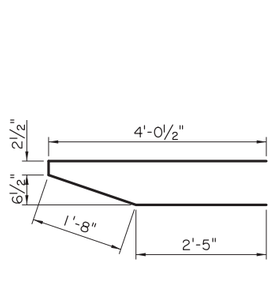

403
(2" ø PIN)
(8'-4" LONG)

BARS 501
(4'-10" LONG)

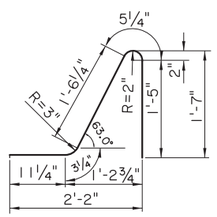

BARS 501A
(4'-7" LONG)

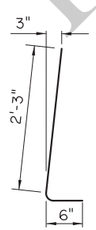

BARS 501B
(2½" ø PIN)
(2'-9" LONG)

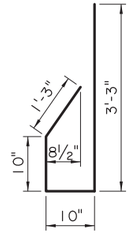

502
(2½" ø PIN)
(6'-2" LONG)

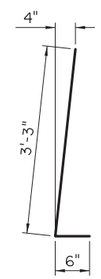

503
(2½" ø PIN)
(3'-9" LONG)

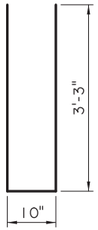

504
(2½" ø PIN)
(7'-4" LONG)

505
(2½" ø PIN)
(3'-7" LONG)

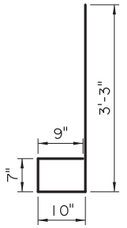

506
(2½" ø PIN)
(5'-5" LONG)

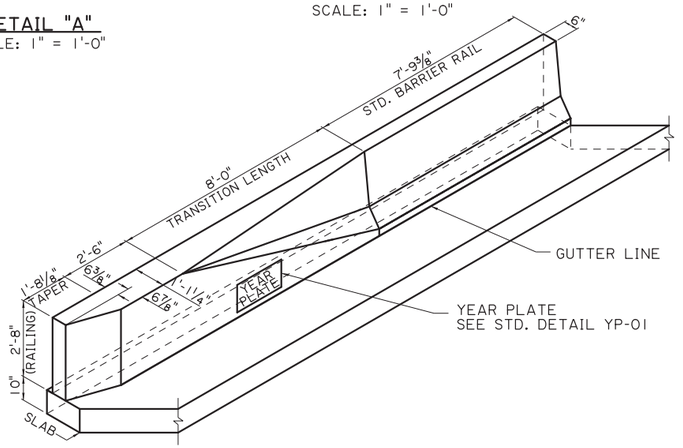

BARRIER RAILING TRANSITION SCHEMATIC
SCALE : ⅜" = 1'-0"

FOR INFORMATIONAL USE

SHEET NUMBER

PARISH | CONTROL SECTION | STATE PROJECT

DESIGN B. DELATTE | CHECK J. NAKHLEH | DETAIL D. HYMEL | CHECK J. NAKHLEH | REVIEW | SERIES # 9 OF 13

APPROVED BY CHIEF ENGINEER: DATE: 12/10/2025

NO. | DATE | REVISION OR CHANGE ORDER DESCRIPTION | BY

ALTERNATE SPAN (1 OF 4)
20'-0" PRECAST CONC. SLAB SPAN
24'-0" CLEAR ROADWAY
45° CROSSING TWO WAY TANGENT

PSS-45-24-20SL

STATE OF LOUISIANA DEPARTMENT OF TRANSPORTATION & DEVELOPMENT

STANDARD PLAN

IP_PWP:d1245749\SS4524altspan1(IRFD).dgn

11/21/2025 10:3

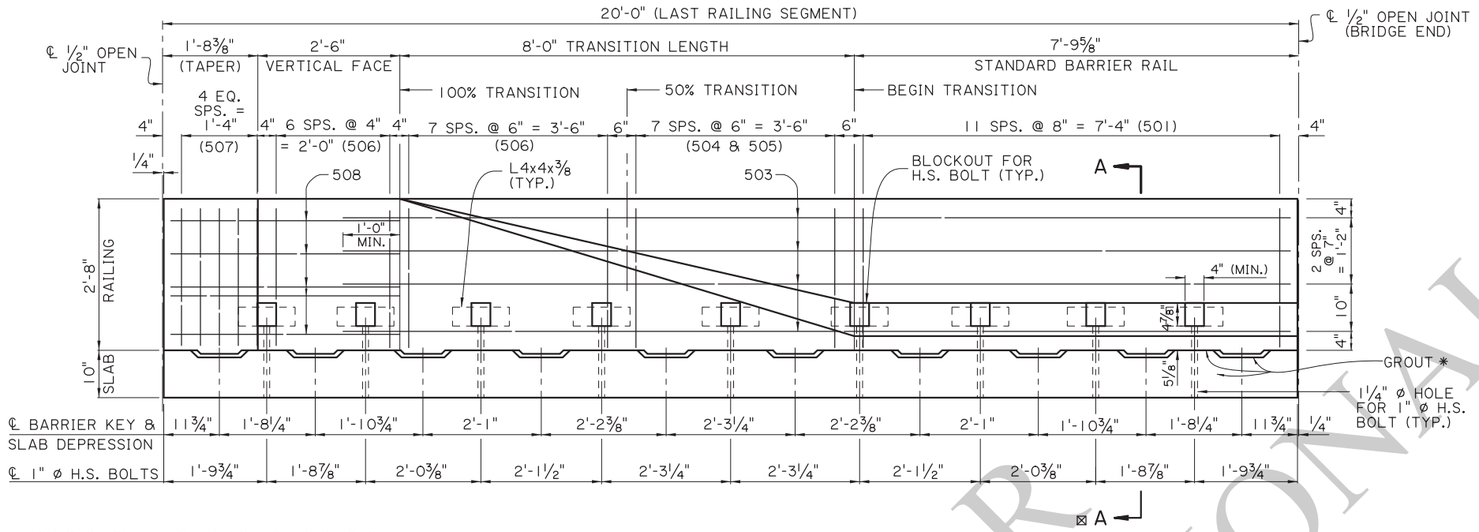

⊠ FOR SECTION A-A & TRANSITION SECTIONS SEE ALTERNATE SPAN (3 OF4)

PRECAST BARRIER RAILING TRANSITION ELEVATION

(SHOWING BARRIER RAILING AT END OF BRIDGE)
SCALE: ¾" = 1'-0"

* PLACE OR INJECT NON-SHRINK GROUT AS REQUIRED IN BETWEEN SLAB DEPRESSIONS TO FILL ALL VOIDS AND GAPS FOR FULL EVEN BEARING OF THE BARRIER ON THE SLAB. SEE NOTE 3, SHEET 9 OF 11.

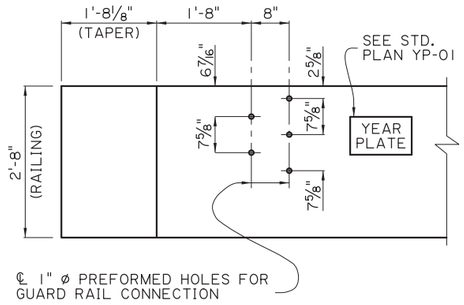

GUARD RAIL CONNECTION DETAIL

CONFORM TO GUARD RAIL STANDARD PLANS
SCALE: ¾" = 1'-0"

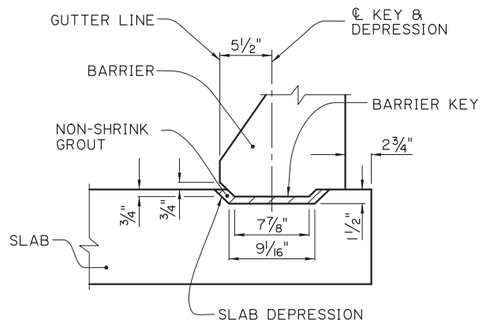

ELEVATION

SCALE: 1½" = 1'-0"

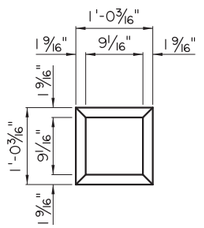

PLAN-DEPRESSION

SCALE: 1" = 1'-0"

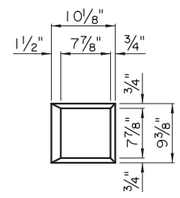

PLAN-KEY

SCALE: 1" = 1'-0"

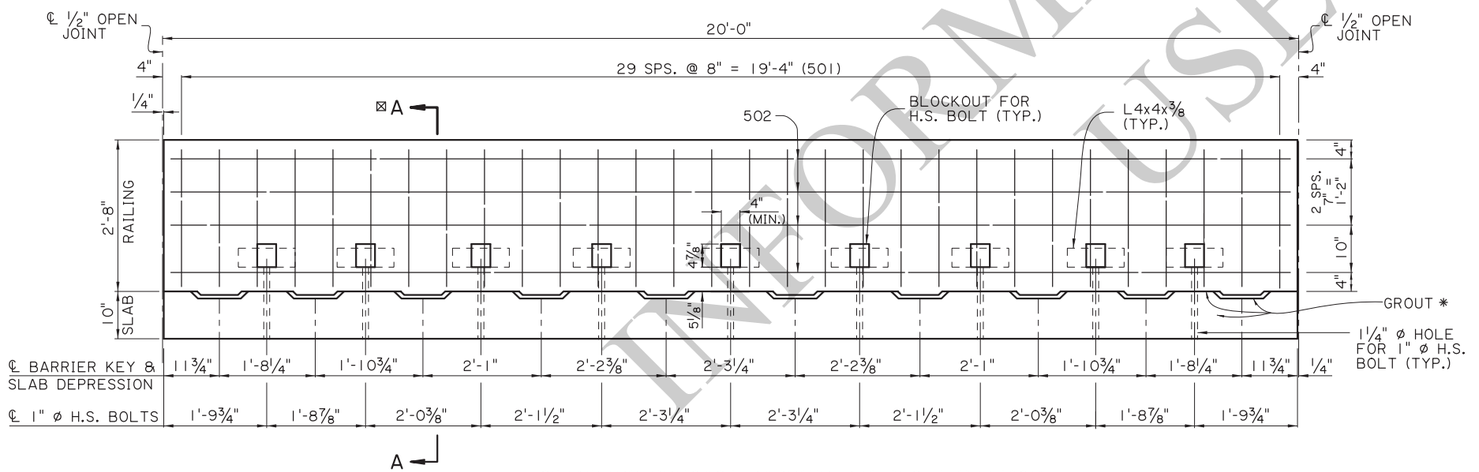

STANDARD PRECAST BARRIER RAILING ELEVATION

(SHOWING BARRIER RAILING ALONG BRIDGE SLAB)
SCALE: ¾" = 1'-0"

BARRIER KEY AND PANEL DEPRESSION DETAILS

FOR INFORMATIONAL USE

SHEET NUMBER

PARISH | CONTROL SECTION | STATE PROJECT

DESIGN B. DELATTE | CHECK J. NAKHLEH | DETAIL D. HYMEL | CHECK J. NAKHLEH | REVIEW | SERIES # 10 OF 13

APPROVED BY CHIEF ENGINEER: DATE: 12/10/2025

NO.	DATE	REVISION OR CHANGE ORDER DESCRIPTION	BY

ALTERNATE SPAN (2 OF 4)
20'-0" PRECAST CONC. BARRIER
24'-0" CLEAR ROADWAY
45° CROSSING TWO WAY TANGENT

PSS-45-24-20SL

DOTD LOUISIANA DEPARTMENT OF TRANSPORTATION & DEVELOPMENT

STANDARD PLAN

11/21/2025 09:5

IP_PWP:d1245749\SS4524altspan2(LRFD).dgn

11/21/2025 09:5

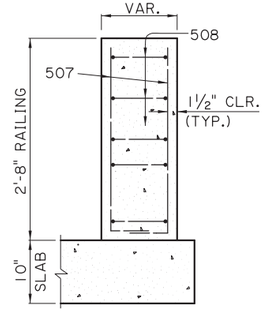

TAPER

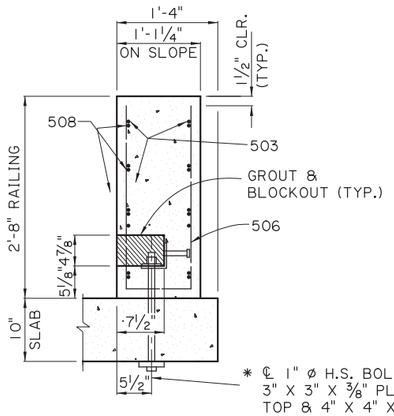

100% TRANSITION

* ℄ 1" ø H.S. BOLT, AND 3" X 3" X ⅜" PLATE WASHER TOP & 4" X 4" X ⅞" PLATE WASHER BOTTOM, AND ONE HEAVY HEX NUT (TYP.).

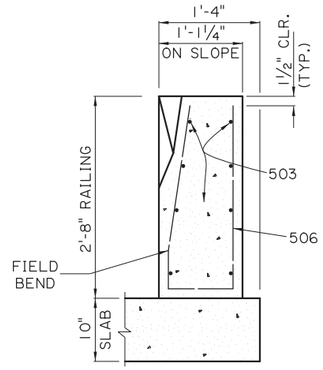

50% TRANSITION

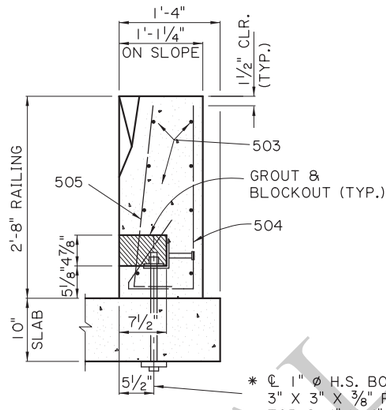

50% TRANSITION

* ℄ 1" ø H.S. BOLT, AND 3" X 3" X ⅜" PLATE WASHER TOP & 4" X 4" X ⅞" PLATE WASHER BOTTOM, AND ONE HEAVY HEX NUT (TYP.).

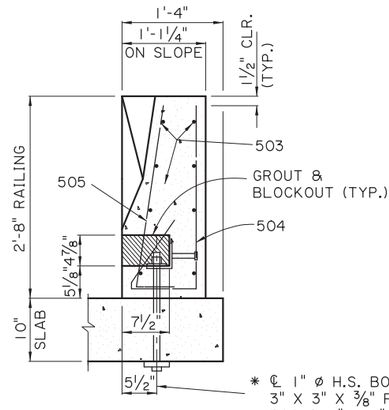

BEGIN TRANSITION

* ℄ 1" ø H.S. BOLT, AND 3" X 3" X ⅜" PLATE WASHER TOP & 4" X 4" X ⅞" PLATE WASHER BOTTOM, AND ONE HEAVY HEX NUT (TYP.).

BARRIER RAILING TRANSITION SECTIONS

SCALE: 1" = 1'-0"

* 1" ø THREADED STUD OF EQUAL STRENGTH, WITH 2 NUTS & 2 WASHERS, MAY BE USED IN LIEU OF H.S. BOLTS.

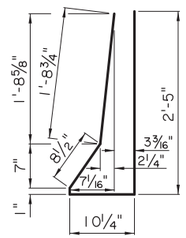

501
(2½" ø PIN)

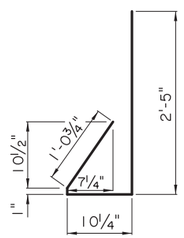

504
(2½" ø PIN)

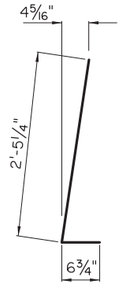

505
(2½" ø PIN)

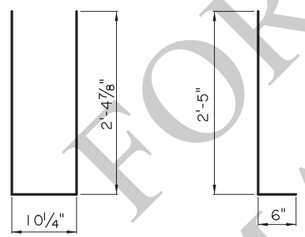

506
(2½" ø PIN)

507
(2½" ø PIN)

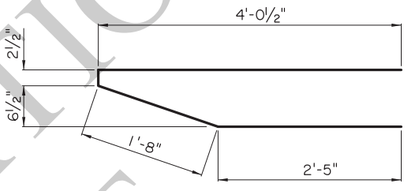

508
(2½" ø PIN)

NOTES:

1) ALL BARRIER RAIL SURFACES ARE TO RECEIVE A CLASS 3 SPECIAL FINISH.

2) ALL SURFACES OF THE BLOCKOUTS EXCEPT THE BOTTOM MAY BE TAPERED AND ALL CORNERS MAY BE ROUNDED TO A RADIUS TO ALLOW FOR EASY REMOVAL OF PLUGS OR FORMS. AFTER PLACING AND TIGHTENING THE ANCHOR BOLTS, THE BLOCKOUTS SHALL BE FILLED WITH AN APPROVED NON-SHRINK GROUT FROM AML AND TROWELED TO THE REQUIRED FINISH AND TO THE SATISFACTION OF THE ENGINEER.

3) AFTER BARRIER IS PLACED AND ALIGNED, ALL GAPS UNDER BARRIER AND TOP OF SLAB SHALL BE FILLED WITH NON-SHRINK GROUT FROM AML AND ALLOWED TO SET PRIOR TO TIGHTENING OF BOLTS. IT IS IMPORTANT TO FILL ALL VOIDS AND GAPS UNDER THE BARRIER TO ENSURE EVEN BEARING ON DECK WHEN THE ANCHOR BOLTS ARE LOADED.

4) ALL 1" ø BOLTS SHALL BE HIGH STRENGTH A325 OR APPROVED EQUAL. BOLT, NUT & WASHER TO BE GALVANIZED AS PER ASTM A-153. BOLTS SHALL BE TENSIONED TO 36 KIPS, OR APPROXIMATELY 540 FOOT-LB. OF TORQUE (LUBRICATED CONNECTION).

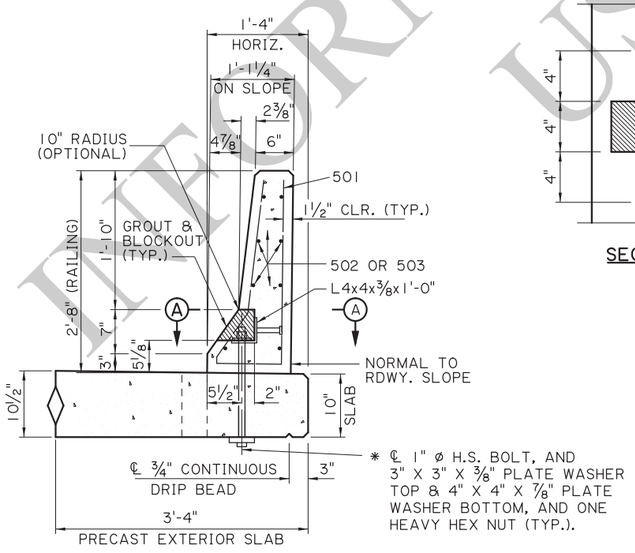

* ℄ 1" ø H.S. BOLT, AND 3" X 3" X ⅜" PLATE WASHER TOP & 4" X 4" X ⅞" PLATE WASHER BOTTOM, AND ONE HEAVY HEX NUT (TYP.).

SECTION A-A
SCALE: 1" = 1'-0"

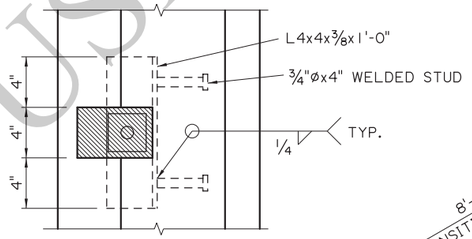

SECTION A-A

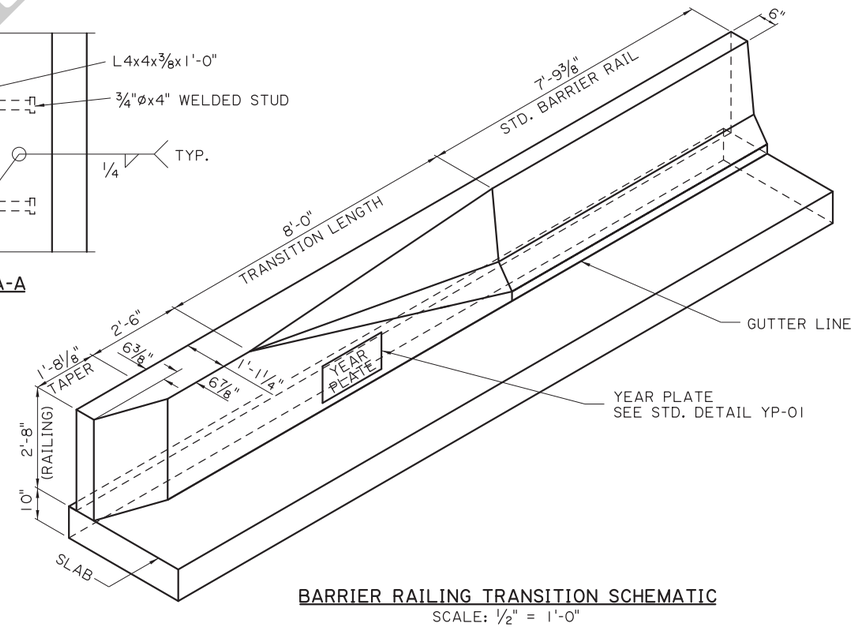

BARRIER RAILING TRANSITION SCHEMATIC
SCALE: ½" = 1'-0"

FOR INFORMATIONAL USE

SHEET NUMBER

PARISH	CONTROL SECTION	STATE PROJECT

DESIGN	B. DELATTE	DETAIL	D. HYMEL	REVIEW
CHECK	J. NAKHLEH	CHECK	J. NAKHLEH	SERIES # 11 OF 13

APPROVED BY CHIEF ENGINEER: DATE: 12/10/2025

NO.	DATE	REVISION OR CHANGE ORDER DESCRIPTION	BY

STATE OF LOUISIANA

ALTERNATE SPAN (3 OF 4)
20'-0" PRECAST CONC. BARRIER

24'-0" CLEAR ROADWAY
45° CROSSING TWO WAY TANGENT

PSS-45-24-20SL

DOTD
LOUISIANA DEPARTMENT OF TRANSPORTATION & DEVELOPMENT

STANDARD PLAN

IP_PWP:d1245749\SS4524altspan3(LRFD).dgn

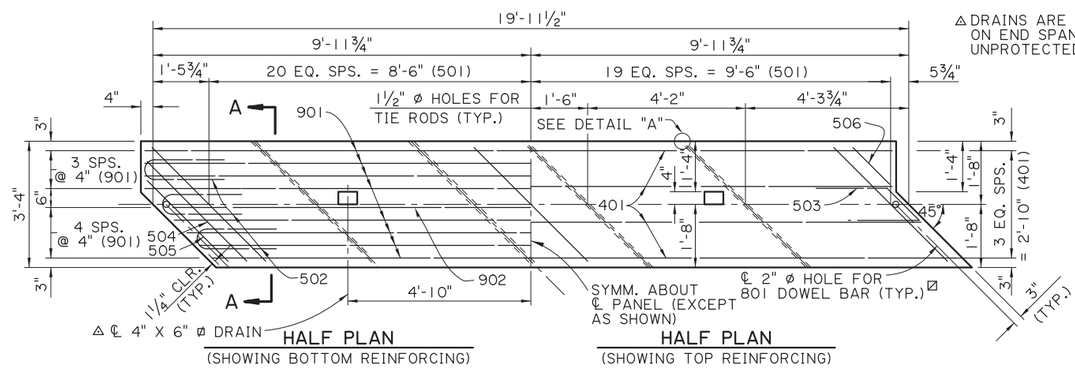

HALF PLAN
(SHOWING BOTTOM REINFORCING)

HALF PLAN
(SHOWING TOP REINFORCING)

△ DRAINS ARE NOT REQUIRED ON END SPANS OVER UNPROTECTED SLOPES.

EXTERIOR UNIT
SCALE ½" = 1'-0"

⊠ HOLES ARE OPTIONAL AT EXPANSION ENDS.

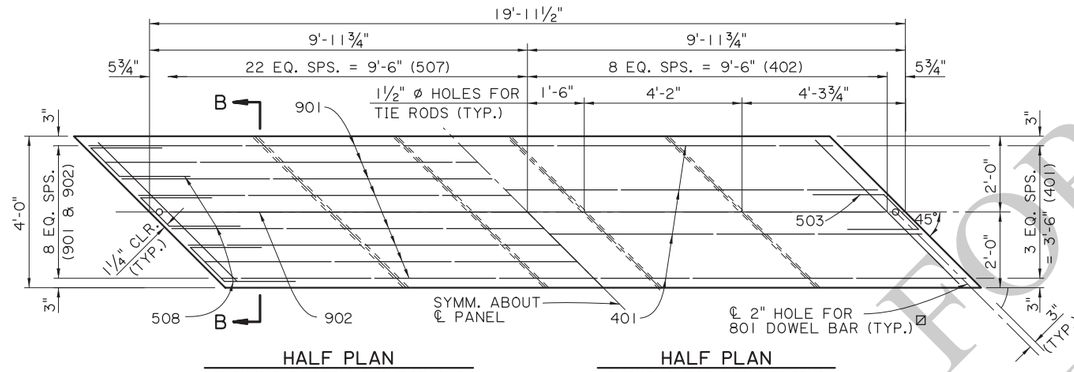

HALF PLAN
(SHOWING BOTTOM REINFORCING)

HALF PLAN
(SHOWING TOP REINFORCING)

INTERIOR UNIT
SCALE ½" = 1'-0"

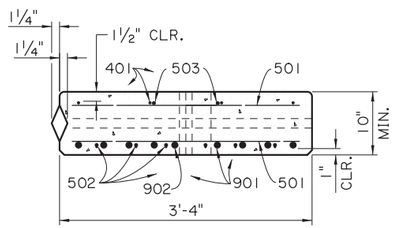

SECTION A-A
EXTERIOR UNIT
SCALE 1" = 1'-0"

NOTE:
FOR EACH SPAN. ONE EXTERIOR UNIT WILL HAVE A TONGUE AND ONE WILL HAVE A GROOVE.

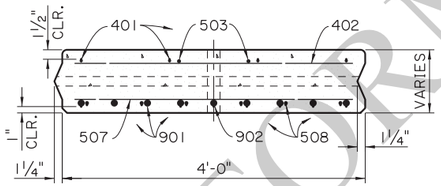

SECTION B-B
INTERIOR UNIT
SCALE 1" = 1'-0"

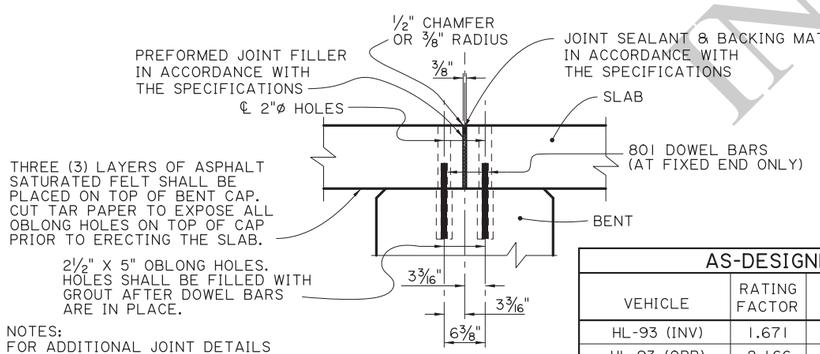

NOTES:
FOR ADDITIONAL JOINT DETAILS SEE SHEET 2 OF 11.
FOR ½" CHAMFER DETAIL, SEE DETAIL "B", ALTERNATE SPAN 1 OF 4.

TYPICAL JOINT DETAIL
SCALE : 1" = 1'-0"

AS-DESIGNED RATING		
VEHICLE	RATING FACTOR	NOTES
HL-93 (INV)	1.671	——
HL-93 (OPR)	2.166	——
LADV-11 (INV)	1.285	MAGNIFICATION FACTOR = 1.3

ALTERNATE SPAN NOTES:

DESIGN SPECIFICATIONS: AASHTO LRFD BRIDGE DESIGN SPECIFICATIONS, 4th EDITION, WITH 2008 & 2009 INTERIMS.

DESIGN LOAD: THE BRIDGE DECK IS DESIGNED FOR A FUTURE WEARING COURSE OF 19 PSF. THE LIVE LOAD IS HL-93, AND LADV-11 (LOUISIANA DESIGN VEHICLE LIVE LOAD 2011).

STRUCTURAL CONCRETE: ALL CONCRETE SHALL BE CLASS P1. THE BRIDGE RAIL CONCRETE SHALL BE CLASS A1 IF RAIL IS CAST IN PLACE. STEEL SIDE FORMS AND STEEL OR CONCRETE BOTTOM FORMS SHALL BE USED FOR PRECAST COMPONENTS. EXPOSED EDGES SHALL HAVE A ¾" CHAMFER, UNLESS OTHERWISE NOTED. ALL SURFACES SHALL RECEIVE A CLASS 1 ORDINARY SURFACE FINISH UPON REMOVAL OF THE FORMS. THE FINAL FINISH SHALL BE A TINE FINISH IN ACCORDANCE WITH THE SPECIFICATIONS.

REINFORCING STEEL: ALL REINFORCING STEEL SHALL BE GRADE 60. DIMENSIONS RELATING TO FABRICATION ARE OUT TO OUT OF BARS, UNLESS SPECIFIED OTHERWISE. DIMENSIONS RELATING TO SPACING ARE TO BAR CENTERS, UNLESS SPECIFIED OTHERWISE. ALL REINFORCING BARS SHALL BE PLACED TO PROVIDE A MINIMUMUM COVER OF 1" FROM THE DRAIN HOLES. REINFORCING STEEL MAY BE TACK WELDED FOR A DISTANCE OF NOT MORE THAN 4'-0" FROM EACH END OF UNIT. NO OTHER WELDING SHALL BE PERMITTED.

MISCELLANEOUS STEEL: HIGH STRENGTH BOLTS SHALL CONFORM TO ASTM DESIGNATION A-325. PRESTRESSING STRANDS SHALL CONFORM TO ASTM DESIGNATION A-416, GRADE 270. PLATES, TIE RODS, AND DRIFT BOLTS SHALL CONFORM TO ASTM DESIGNATION A709, GRADE 36. STEEL SPECIFIED TO BE ZINC COATED SHALL BE IN CONFORMANCE WITH ASTM DESIGNATION A-123.

GROUT: THE GROUT SHALL BE AN APPROVED FLOWABLE NON-SHRINK GROUT LISTED ON AML. THE GROUT SHALL BE TESTED FOR ACCEPTANCE PRIOR TO USAGE. THE GROUT SHALL ATTAIN A MINIMUM COMPRESSIVE STRENGTH OF 3500 PSI PRIOR TO LOADING SLABS. SURFACES SHALL BE THOROUGHLY SATURATED WITH WATER BY FLOODING THE HOLES FOR APPROXIMATELY FIVE (5) MINUTES IMMEDIATELY BEFORE THE GROUT IS PLACED. ONLY POTABLE WATER SHALL BE USED FOR SATURATION AND MIXING PURPOSES.

PATCHING MATERIAL: THE PATCHING MATERIAL SHALL BE AN APPROVED PATCHING MATERIAL FOR PRECAST OR PRESTREESED CONCRETE PRODUCTS LISTED ON AML. SURFACE PREPARATION, MIXING AND PLACMENT SHALL BE IN ACCORDANCE WITH THE MANUFACTURERS' RECOMMENDATIONS. ONLY POTABLE WATER SHALL BE USED FOR SATURATION AND MIXING PURPOSES.

PRECAST UNITS: THE PLANS FOR AN ONGOING OPERATION OF FABRICATION FACILITIES SHALL BE APPROVED BY THE DEPARTMENT. EACH UNIT SHALL HAVE "LIVE LOAD HL-93 AND LADV-11", THE FABRICATOR'S MARK, AND UNIQUE NUMBER, MEETING THE APPROVAL OF THE ENGINEER STAMPED OR INSCRIBED IN THE PLASTIC CONCRETE. PRECAST UNITS MAY BE CAST WITH OR WITHOUT CAMBER. IF CAMBER IS PROVIDED IT SHALL NOT EXCEED ¼" AT THE CENTERLINE OF SPAN. ALL UNITS SHALL BE HELD AT THE PLANT FOR A MINIMUM OF TEN(10) DAYS AFTER CASTING. THE CONCRETE SHALL REACH A MINIMUM STRENGTH OF 3,000 PSI BEFORE HANDLING IS PERMITTED.

THE LIFTING INSERTS SHALL BE 1", TYPE S INSERTS AS MANUFACTURED BY DAYTON-SUPERIOR CORPORATION OR AN APPROVED EQUAL. EACH INSERT SHALL HAVE A MINIMUM LOAD CAPACITY OF 10,000 POUNDS . FOUR(4) INSERTS WITH 1" ø X 5" LONG COIL BOLTS SHALL BE PLACED IN THE TOP OF THE UNIT AND LOCATED 1'-3" FROM ITS ENDS AND 1'-0" FROM ITS EDGES. INSERT HOLES SHALL BE GROUT FILLED AFTER PLACEMENT OF UNIT. AT THE CONTRACTOR'S OPTION A SLING OF SUFFICIENT CAPACITY MAY BE USED FOR LIFTING, PROVIDED THE SAME PICKUP LOCATION FROM THE ENDS ARE USED. FABRICATION TOLERANCES SHALL BE AS FOLLOWS:

UNIT DEPTH	± 3⁄16"
UNIT LENGTH	+ ⅛" AND -½"
OVERALL SPAN WIDTH	± 2"

ALL PRECAST UNITS IN EACH BRIDGE SPAN SHALL BE MATCH CAST IN THE SAME CASTING BED TO ENSURE A PROPER FIT DURING INSTALLATION.

GUARDRAIL: CONFORM TO PROJECT PLANS AND GUARD RAIL STANDARD PLANS.

PAYMENT: ALL WORK WILL BE PAID FOR UNDER THE DESIGNATED BRIDGE SUPERSTRUCTURE AND SUBSTRUCTURE PAY ITEM AND IN ACCORDANCE WITH THE SPECIFICATIONS.

ESTIMATED QUANTITIES (ONE EXTERIOR UNIT)				
BAR	NO.	UNIT LENGTH	TOTAL LENGTH	LOCATION
901	8	19'-7"	156'-8"	LONGIT. BOT. OF SLAB
902	1	18'-11"	18'-11"	LONGIT. BOT. OF SLAB
TOTAL NO. 9 BARS = 175'-7" = 597 LBS.				
801	1	1'-0"	1'-0"	DOWELS
TOTAL NO. 8 BARS = 1'-0" = 3 LBS.				
501	80	4'-2"	333'-4"	TRANS. TOP & BOT. OF SLAB
502	6	4'-6"	27'-0"	TOP & BOT. END OF SLAB
503	2	4'-9"	9'-6"	TOP & BOT. END OF SLAB
504	2	3'-9"	7'-6"	TOP & BOT. END OF SLAB
505	2	3'-0"	6'-0"	TOP & BOT. END OF SLAB
506	2	1'-4"	2'-8"	TOP & BOT. END OF SLAB
TOTAL NO. 5 BARS = 386'-0" = 403 LBS.				
401	4	19'-7"	78'-4"	LONGIT. TOP OF SLAB
TOTAL NO. 4 BARS = 78'-4" = 52 LBS.				
DEFORMED REINFORCING STEEL = 1055 LBS.				
CLASS P1 CONCRETE = 2.05 CU. YDS.				
CONCRETE RAILING (PER SPAN) = 40.00 LIN. FT.				

ESTIMATED QUANTITIES (ONE INTERIOR UNIT)				
BAR	NO.	UNIT LENGTH	TOTAL LENGTH	LOCATION
901	8	19'-7"	156'-8"	LONGIT. BOT. OF SLAB
902	1	18'-11"	18'-11"	LONGIT. BOT. OF SLAB
TOTAL NO. 9 BARS = 175'-7" = 597 LBS.				
801	1	1'-0"	1'-0"	DOWELS
TOTAL NO. 8 BARS = 1'-0" = 3 LBS.				
503	2	4'-9"	9'-6"	TOP END OF SLAB
507	45	5'-2"	232'-6"	TRANS. BOT. OF SLAB
508	6	4'-7"	27'-6"	BOT. END OF SLAB
TOTAL NO. 5 BARS = 269'-6" = 282 LBS.				
401	4	19'-7"	78'-4"	LONGIT. TOP OF SLAB
402	17	4'-2"	70'-10"	TRANS. TOP OF SLAB
TOTAL NO. 4 BARS = 149'-2" = 100 LBS.				
DEFORMED REINFORCING STEEL = 982 LBS.				
⊙ CLASS P1 CONCRETE = 2.46 CU. YDS.				

⊙ BASED ON A 10" SLAB THICKNESS

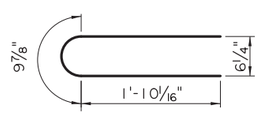

502
5 " ø PIN

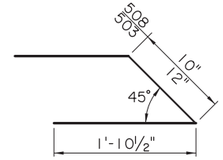

503 & 508
2½" ø PIN

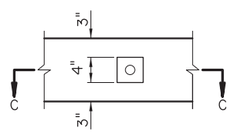

END VIEW

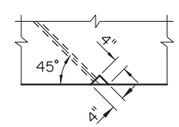

SECTION C-C

DETAIL "A"
TYP. EXTERIOUR EDGE ONLY
SCALE 1" = 1'-0"

SHEET NUMBER

PARISH	CONTROL SECTION	STATE PROJECT

DESIGN	CHECK	DETAIL	CHECK	REVIEW	SERIES #
J. NAKHLEH	B. DELATTE	D. HYMEL	B. DELATTE		12 OF 13

APPROVED BY CHIEF ENGINEER:
DATE: 12/10/2025

NO.	DATE	REVISION OR CHANGE ORDER DESCRIPTION	BY

STATE OF LOUISIANA
DEPARTMENT OF TRANSPORTATION & DEVELOPMENT

ALTERNATE SPAN (4 OF 4)
20'-0" PRECAST CONC. SLAB UNIT
24'-0" CLEAR ROADWAY
45° CROSSING TWO WAY TANGENT
PSS-45-24-20SL

DOTD
LOUISIANA DEPARTMENT OF TRANSPORTATION & DEVELOPMENT

STANDARD PLAN

FOR FINAL INFORMATION

11/25/2025 13:2
IP_PWP:d1245749\SS4524altspan4(LRFD).dgn

11/25/2025 07:2:

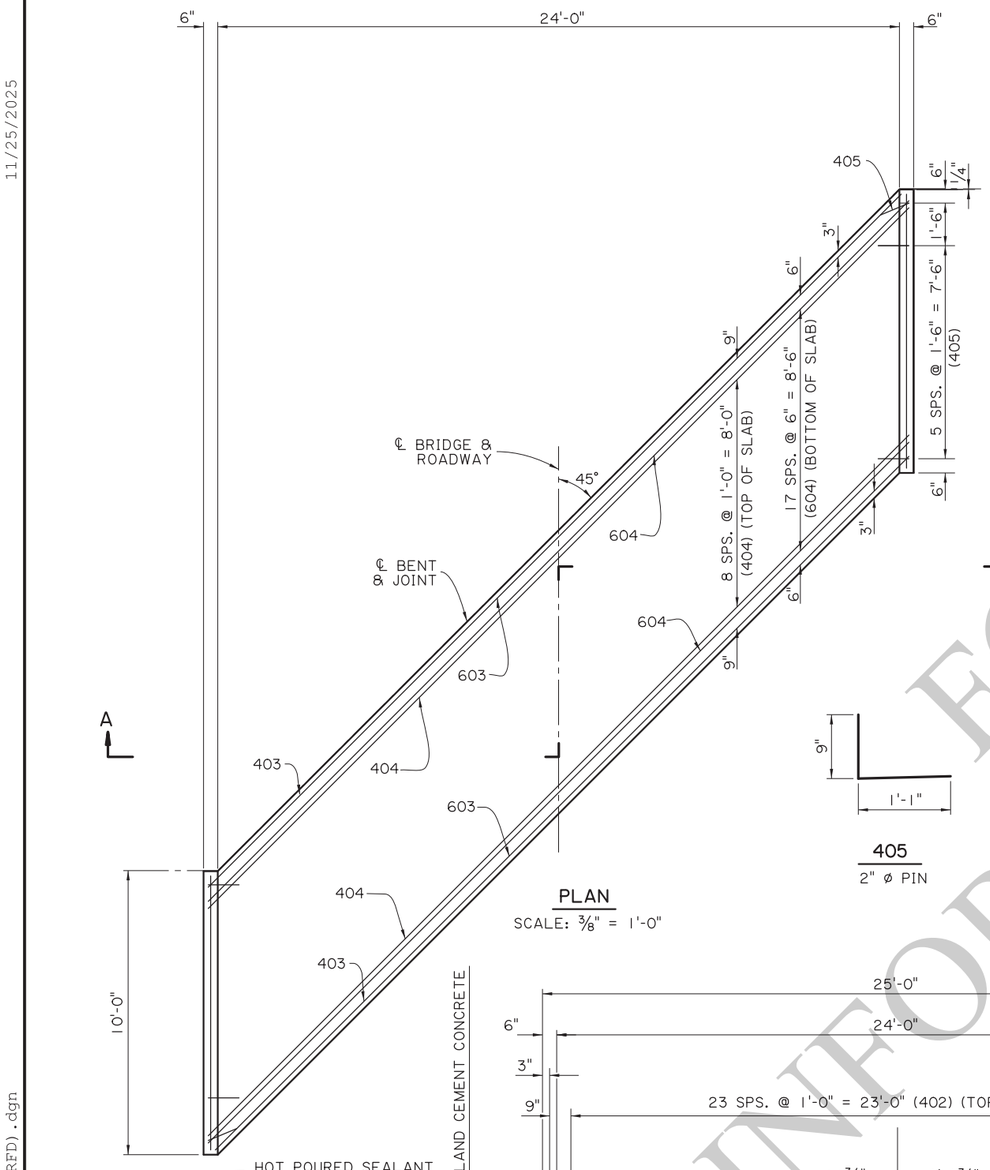

PLAN
SCALE: 3/8" = 1'-0"

405
2" ø PIN

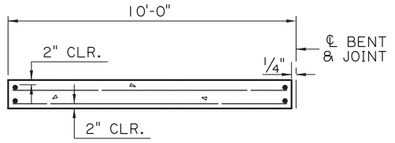

(FOR PORTLAND CEMENT CONCRETE ROADWAY PAVEMENT)

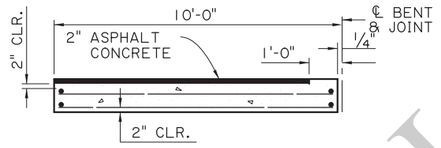

SECTION ALONG ℄ ROADWAY
SCALE : 1/4" = 1'-0"

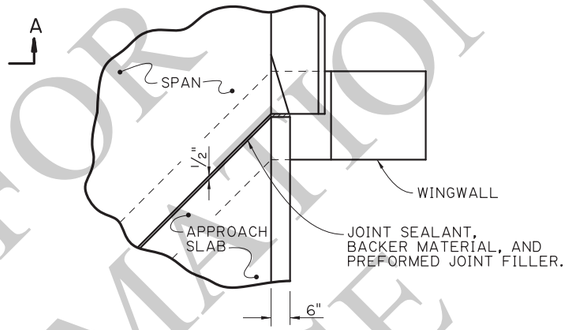

JOINT DETAIL
N.T.S.

ESTIMATED QUANTITIES (ONE SLAB)				
BAR	NO.	UNIT LENGTH	TOTAL LENGTH	LOCATION
801	7	1'-0"	7'-0"	DOWELS
TOTAL NO. 8 BARS = 7'-0" = 19 LBS.				
601	2	9'-7"	19'-2"	LONGIT. BOT. OF SLAB
602	48	9'-6"	456'-0"	LONGIT. BOT. OF SLAB
603	2	34'-6"	69'-0"	TRANSV. BOT. OF SLAB
604	18	34'-10"	627'-0"	TRANSV. BOT. OF SLAB
TOTAL NO. 6 BARS = 1,171'-2" = 1,759 LBS.				
401	4	9'-7"	38'-4"	LONGIT. TOP OF SLAB & CURB
402	24	9'-6"	228'-0"	LONGIT. TOP OF SLAB
403	2	34'-6"	69'-0"	TRANSV. TOP OF SLAB
404	9	34'-10"	313'-6"	TRANSV. TOP OF SLAB
405	14	1'-10"	25'-8"	DOWELS IN CURB
TOTAL NO. 4 BARS = 674'-6" = 451 LBS.				
⊙ TOTAL DEFORMED REINFORCING STEEL = 2,229 LBS.				
CONCRETE APPROACH SLAB = 27.78 SQ. YDS.				
⊠ ⊙ ASPHALT CONCRETE = 2.6 TONS				
⊠ ⊙ SAW CUT & SEAL = 33 LIN. FT.				

⊙ TO BE PAID FOR UNDER ITEM CONCRETE APPROACH SLABS.

⊠ REQUIRED WHEN APPROACH SLAB IS ADJACENT TO ASPHALT CONCRETE PAVEMENT.

APPROACH SLAB NOTES:

DESIGN SPECIFICATIONS: AASHTO LRFD BRIDGE DESIGN SPECIFICATIONS 4TH EDITION, WITH 2008 & 2009 INTERIMS.

STRUCTURAL CONCRETE: ALL CONCRETE SHALL BE CLASS A1. EXPOSED EDGES SHALL HAVE A 3/4" CHAMFER, UNLESS SPECIFIED OTHERWISE.

REINFORCING STEEL: ALL REINFORCING STEEL SHALL BE GRADE 60. DIMENSIONS RELATING TO THE FABRICATION ARE OUT-TO-OUT OF BARS, UNLESS SPECIFIED OTHERWISE.

BEDDIGN MATERIAL: FOR DETAILS OF BEDDING MATERIAL AND UNDERDRAINS, SEE APPROACH SLAB STANDARD DETAILS.

SAWING AND SEALING: THE ASPHALT CONCRETE SHALL BE SAW CUT AT THE END OF THE CONCRETE APPROACH SLAB THE ENTIRE ROADWAY WIDGTH AND SEALED WHICH WILL BE PAID FOR UNDER THE DESIGNATED ROADWAY PAY ITEM.

PAYMENT: ALL OTHER WORK WILL BE PAID FOR UNDER THE DESIGNATED BRIDGE CONCRETE APPROACH SLAB PAY ITEM AND IN ACCORDANCE WITH THE SPECIFICATIONS.

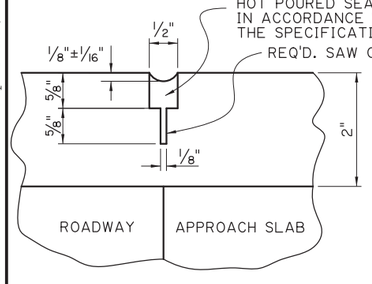

SAWING & SEALING JOINT DETAIL
N.T.S.

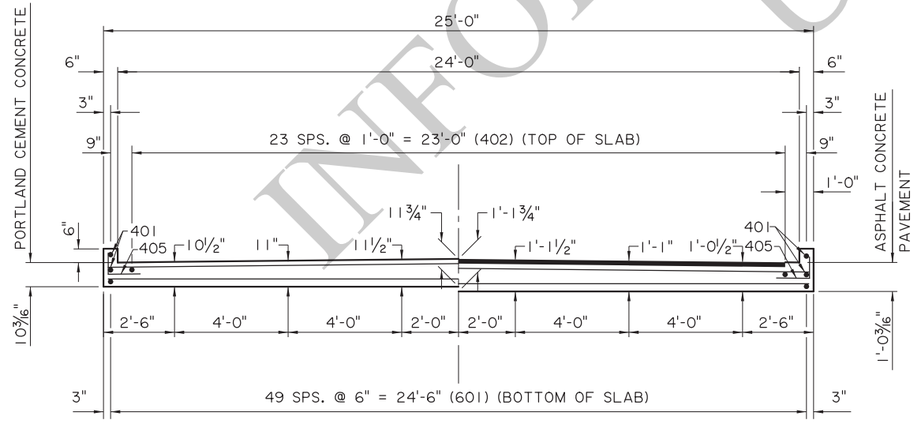

SECTION A-A
SCALE 3/8" = 1'-0"

NOTE: FOR ADDITIONAL JOINT DETAILS SEE SPAN SHEET.

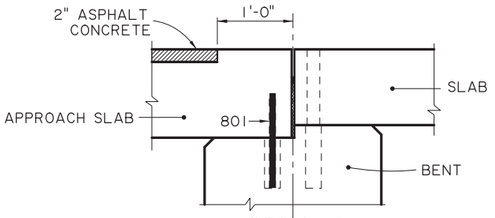

DETAIL A
SCALE : 1" = 1'-0"
(ASPHALT CONCRETE PAVEMENT OPTION)

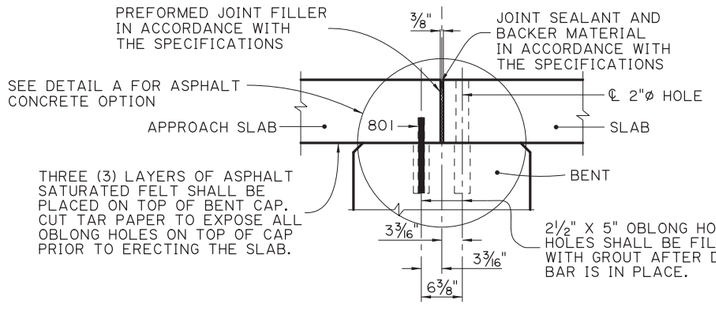

TYPICAL JOINT DETAIL
SCALE : 1" = 1'-0"

FOR INFORMATIONAL USE

SHEET NUMBER

PARISH	CONTROL SECTION	STATE PROJECT

DESIGN	B. DELATTE	DETAIL	D. HYMEL	REVIEW	SERIES # 13 OF 13
CHECK	J. NAKHLEH	CHECK	J. NAKHLEH		

APPROVED BY CHIEF ENGINEER: DATE: 12/10/2025

NO.	DATE	REVISION OR CHANGE ORDER DESCRIPTION	BY

APPROACH SLAB
10'-0" CAST-IN- PLACE
24'-0" CLEAR ROADWAY
45° CROSSING TWO WAY TANGENT

PSS-45-24-20SL

DOTD LOUISIANA DEPARTMENT OF TRANSPORTATION & DEVELOPMENT

STANDARD PLAN

IP_PWP:d1245749\SS4524altaprslab(LRFD).dgn

11/25/2025 07:41

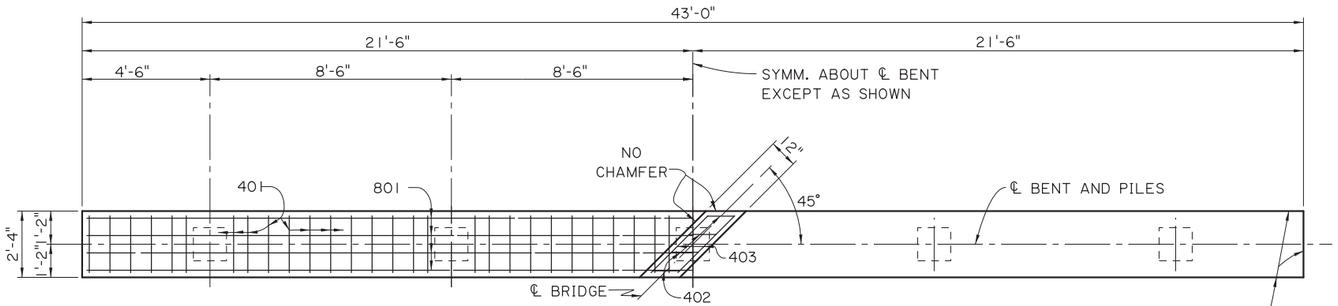

PLAN - INTERMEDIATE BENT

SCALE ⅜" = 1'-0"

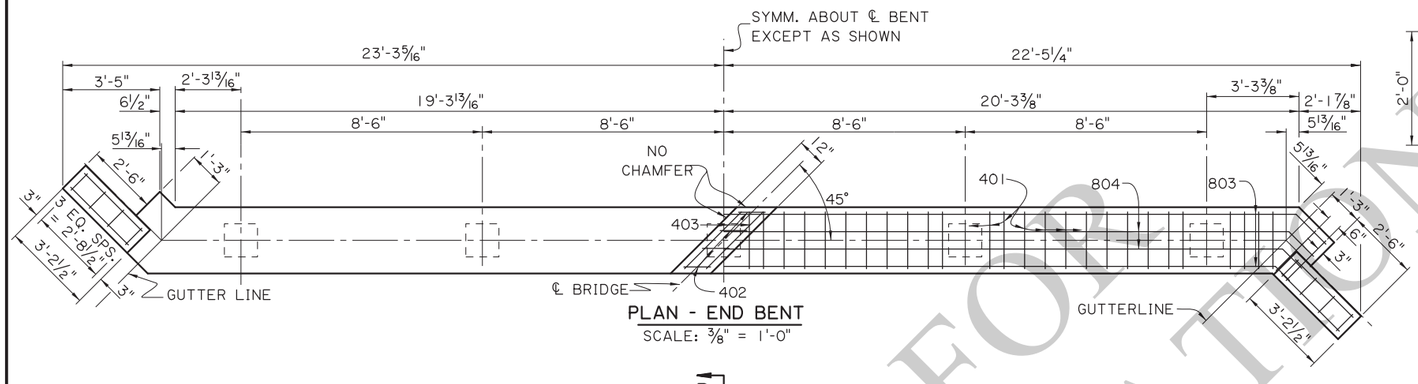

PLAN - END BENT

SCALE: ⅜" = 1'-0"

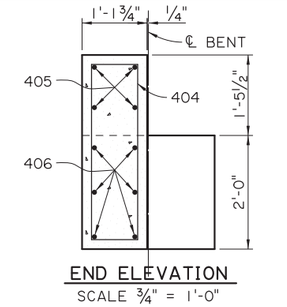

END ELEVATION

SCALE ¾" = 1'-0"

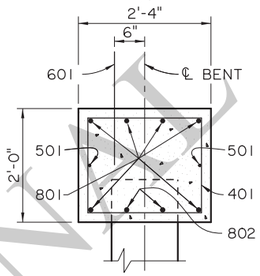

SECTION A-A

SCALE: ¾" = 1'-0"

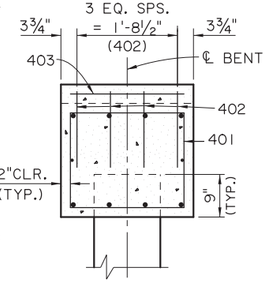

SECTION B-B

SCALE: ¾" = 1'-0"

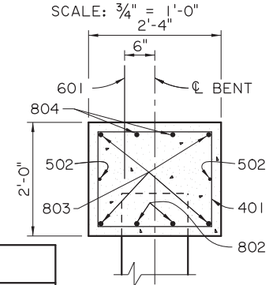

SECTION C-C

SCALE: ¾" = 1'-0"

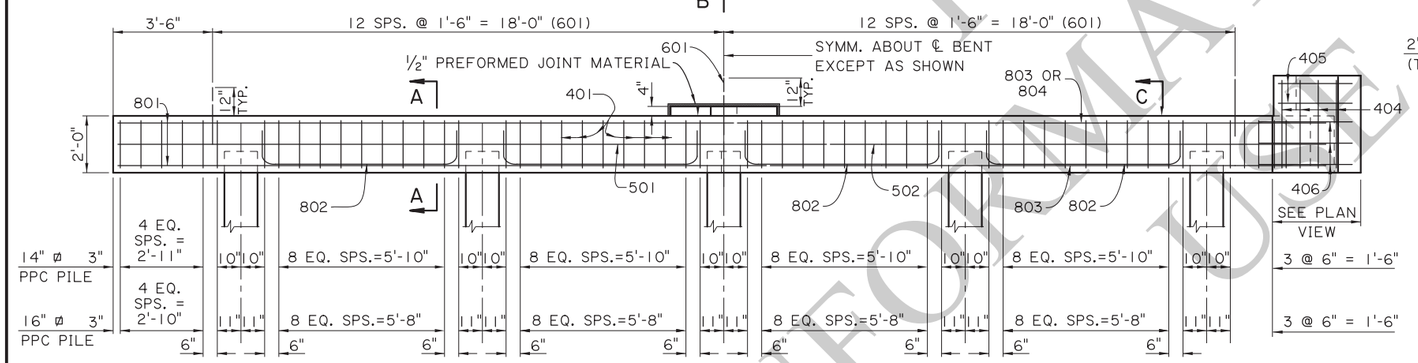

HALF ELEVATION - INTERMEDIATE BENT

SCALE ⅜" = 1'-0"

HALF ELEVATION - END BENT

SCALE ⅜" = 1'-0"

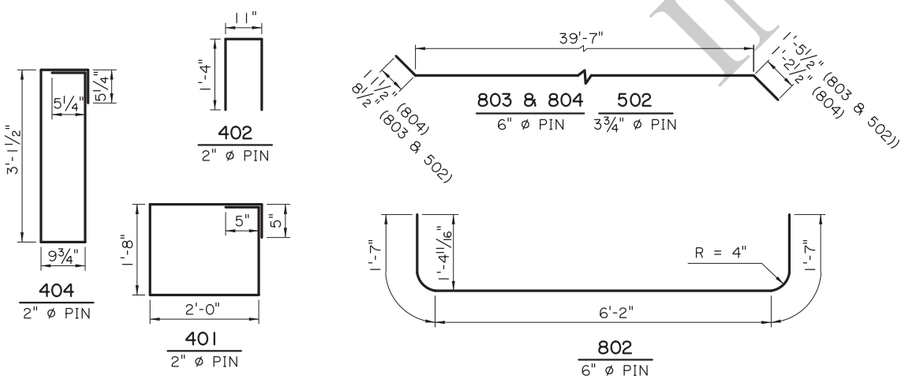

AS-DESIGNED RATING		
VEHICLE	RATING FACTOR	NOTES
HL-93 (INV)	1.486	———
HL-93 (OPR)	1.927	———
LADV-11 (INV)	1.143	MAGNIFICATION FACTOR = 1.3

NOTES:

DESIGN SPECIFICATIONS: AASHTO LRFD BRIDGE DESIGN SPECIFICATIONS 4th EDITION, WITH 2008 & 2009 INTERIMS.

DESIGN LOAD: LIVE LOAD IS HL-93, AND LADV-11 (LOUISIANA DESIGN VEHICLE LIVE LOAD 2011).

STRUCTURAL CONCRETE: ALL CONCRETE SHALL BE CLASS A1. EXPOSED EDGES SHALL HAVE A ¾" CHAMFER UNLESS SPECIFIED OTHERWISE. ALL EXPOSED FACES OF WINGWALLS AND ENDS OF CAPS SHALL RECEIVE A SURFACE FINISH AS PER THE SPECIFICATIONS UNLESS SPECIFIED OTHERWISE.

ESTIMATED QUANTITIES (ONE INTER. BENT)				
BAR	NO.	UNIT LENGTH	TOTAL LENGTH	LOCATION
801	6	42'-8"	256'-0"	LONGIT. IN CAP
802	8	9'-4"	74'-8"	LONGIT. IN CAP
TOTAL NO. 8 BARS = 330'-8" = 883 LBS.				
601	25	2'-0"	50'-0"	DOWELS
TOTAL NO. 6 BARS = 50'-0" = 75 LBS.				
501	2	42'-8"	85'-4"	LONGIT. IN CAP
TOTAL NO. 5 BARS = 85'-4" = 89 LBS.				
401	56	8'-2"	457'-4"	STIRRUPS IN CAP
402	4	3'-7"	14'-4"	STIRRUPS IN RISER
403	2	2'-9"	5'-6"	LONGIT. IN RISER
TOTAL NO. 4 BARS = 477'-2" = 319 LBS.				
* TOTAL DEFORMED REINFORCING STEEL= 1,366 LBS.				
⊖ CLASS A1 CONCRETE = 7.23 CU. YDS.				
MAX. PILE LOAD: SERVICE DEAD LOAD = 25 TONS SERVICE LIVE LOAD = 31 TONS FACTORED TOTAL LOAD = 77 TONS				

* ADD 75 LBS. OF REINFORCING STEEL (25-601 DOWELS) WHEN TWO FIXED ENDS OCCUR ON THE SAME BENT.

ESTIMATED QUANTITIES (ONE END BENT)				
BAR	NO.	UNIT LENGTH	TOTAL LENGTH	LOCATION
802	8	9'-4"	74'-8"	LONGIT. IN CAP
803	4	41'-9"	167'-0"	LONGIT. IN CAP
804	2	41'-9"	83'-6"	LONGIT. IN CAP
TOTAL NO. 8 BARS = 325'-2" = 868 LBS.				
601	25	2'-0"	50'-0"	DOWELS
TOTAL NO. 6 BARS = 50'-0" = 75 LBS.				
502	2	41'-9"	83'-6"	LONGIT. IN CAP
TOTAL NO. 5 BARS = 83'-6" = 87 LBS.				
401	56	8'-2"	457'-4"	STIRRUPS IN CAP
402	4	3'-7"	14'-4"	STIRRUPS IN RISER
403	2	2'-9"	5'-6"	LONGIT. IN RISER
404	8	8'-9"	70'-0"	STIRRUPS IN WINGWALL
405	8	2'-10"	22'-8"	LONGIT. IN WINGWALL
406	12	4'-0"	48'-0"	LONGIT. IN WINGWALL
TOTAL NO. 4 BARS = 617'-10" = 413 LBS.				
TOTAL DEFORMED REINFORCING STEEL = 1,443 LBS.				
⊖ CLASS A1 CONCRETE = 7.89 CU. YDS.				
MAX. PILE LOAD: SERVICE DEAD LOAD = 25 TONS FACTORED DEAD LOAD = 31 TONS FACTORED LIVE LOAD = 77 TONS				

⊖ 16" ø PPC PILES USED FOR ESTIMATING PURPOSES ONLY. (ADD 0.06 CU. YDS. OF CLASS A1 CONCRETE PER BENT WHEN 14" ø PPC PILES ARE USED.)

REINFORCING STEEL: ALL REINFORCING SHALL BE GRADE 60. DIMENSIONS RELATING TO FABRICATION ARE OUT TO OUT OF BARS, UNLESS SPECIFIED OTHERWISE. DIMENSIONS RELATING TO SPACING ARE TO BAR CENTERS, UNLESS SPECIFIED OTHERWISE. DOWELS (601 BARS) SHALL BE PROVIDED AT ALL FIXED BEARINGS AND APPROACH SLAB BEARINGS (SEE GENERAL PLAN). ALL EXPOSED ENDS OF DOWELS SHALL BE WRAPPED WITH TWO LAYERS OF 15 LB. ASPHALT SATURATED FELT. CLOSE FITTING TUBES OF COMPRESSIBLE MATERIAL NOT LESS THAN 3/16" THICK MAY BE SUBSTITUTED.

PRECAST CONCRETE PILES: CONFORM TO PILE STANDARD PLAN AND PROJECT PLANS FOR FABRICATION AND INSTALLATION. PILES WILL BE PAID FOR UNDER THE DESIGNATED PILE PAY ITEMS.

PREFORMED JOINT MATERIAL: PREFORMED JOINT MATERIAL SHALL BE IN ACCORDANCE WITH THE SPECIFICATIONS.

PAYMENT: ALL OTHER WORK WILL BE PAID FOR UNDER THE DESIGNATED BRIDGE SUPERSTRUCTURE AND SUBSTRUCTURE PAY ITEM AND IN ACCORDANCE WITH THE SPECIFICATIONS.

FOR INFORMATIONAL USE

SHEET NUMBER

PARISH	CONTROL SECTION	STATE PROJECT

DESIGN	B. DELATTE	DETAIL	D. HYMEL	REVIEW	SERIES # 1 OF 13
CHECK	J. NAKHLEH	CHECK	J. NAKHLEH		

APPROVED BY CHIEF ENGINEER: DATE: 12/10/2025

NO.	DATE	REVISION OR CHANGE ORDER DESCRIPTION	BY

STATE OF LOUISIANA — DEPARTMENT OF TRANSPORTATION AND DEVELOPMENT

BENTS REINFORCED CONCRETE PILE BENTS

28'-0" CLEAR ROADWAY
45° CROSSING TWO WAY TANGENT

PSS-45-28-20SL

DOTD LOUISIANA DEPARTMENT OF TRANSPORTATION & DEVELOPMENT

STANDARD PLAN

IP_PWP:d1245750\SS4528bent(LRFD).dgn

AS-DESIGNED RATING		
VEHICLE	RATING FACTOR	NOTES
HL-93 (INV)	1.366	——
HL-93 (OPR)	1.771	——
LADV-11 (INV)	1.051	MAGNIFICATION FACTOR = 1.3

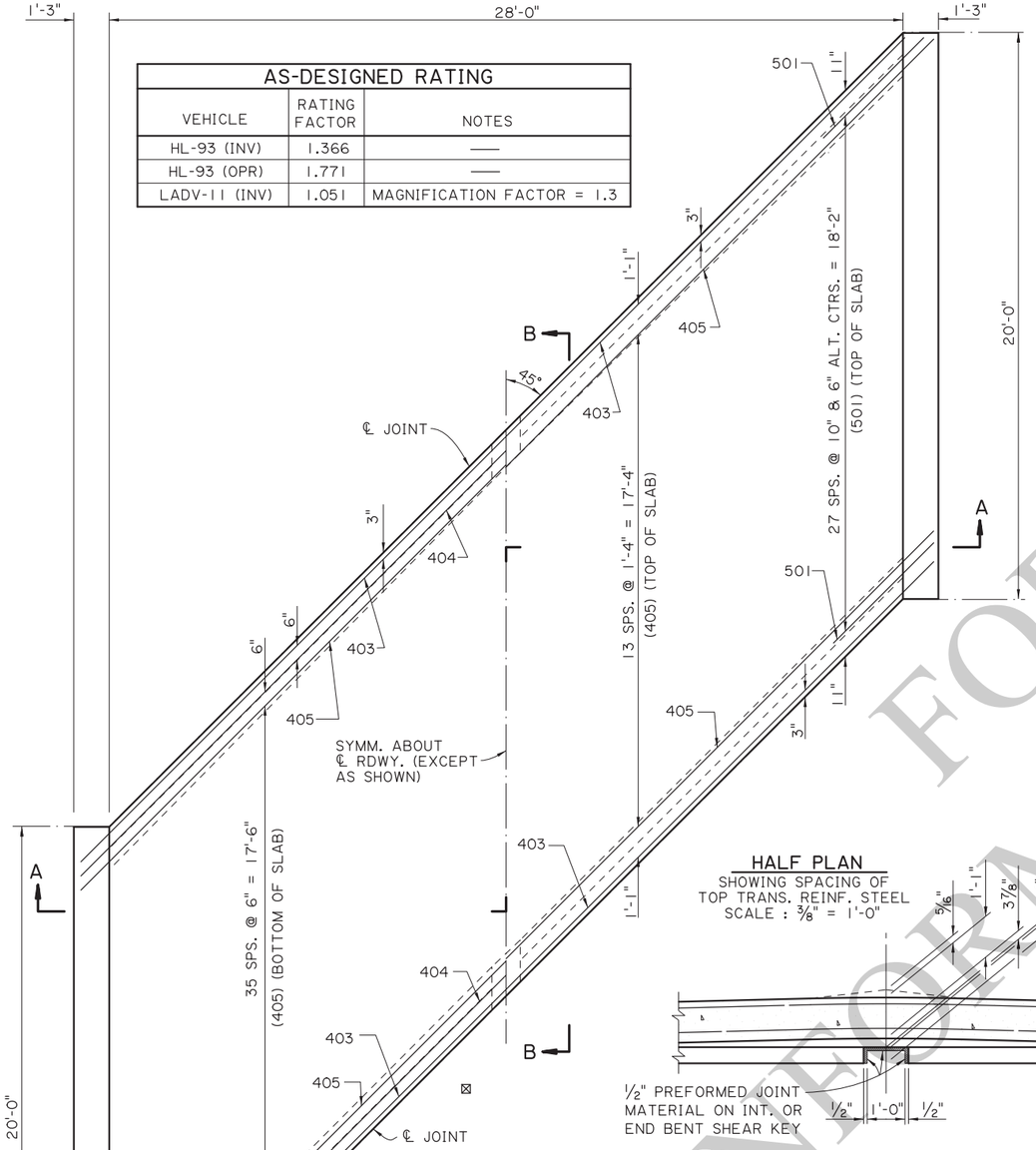

HALF PLAN
SHOWING SPACING OF BOTTOM TRANS. REINF. STEEL
SCALE : 3/8" = 1'-0"

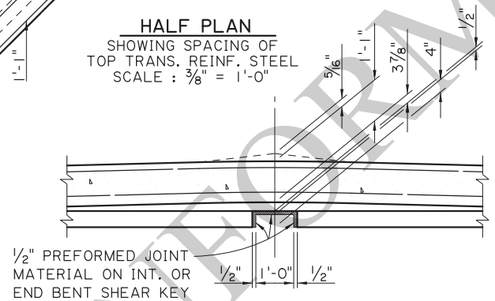

DETAIL "A"
N.T.S.

HALF PLAN
SHOWING SPACING OF TOP TRANS. REINF. STEEL
SCALE : 3/8" = 1'-0"

DETAIL B
SCALE : 1/2" = 1'-0"

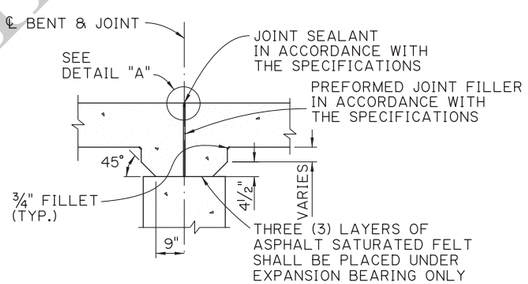

DETAIL SHOWING TYPICAL JOINT & HAUNCH
SCALE : 1/2" = 1'-0"

SPAN NOTES:

DESIGN SPECIFICATIONS:
AASHTO LRFD BRIDGE DESIGN SPECIFICATIONS, 4th EDITION. WITH 2008 & 2009 INTERIMS.

DESIGN LOADS:
THE BRIDGE DECK IS DESIGNED FOR A FUTURE WEARING COURSE OF 19 PSF. THE LIVE LOAD IS HL-93, AND LADV-11 (LOUISIANA DESIGN VEHICLE LIVE LOAD 2011).

STRUCTURAL CONCRETE:
ALL CONCRETE SHALL BE CLASS A1. EXPOSED EDGES SHALL HAVE A 3/4" CHAMFER UNLESS SPECIFIED OTHERWISE. ALL BARRIER RAIL SURFACES ARE TO RECEIVE A CLASS 3 SPECIAL SURFACE FINISH.

REINFORCING STEEL:
ALL REINFORCING SHALL BE GRADE 60; DIMENSIONS RELATING TO SPACING ARE TO BAR CENTERS, DIMENSIONS RELATING TO FABRICATION ARE OUT TO OUT OF BARS, UNLESS SPECIFIED OTHERWISE. ALL REINFORCING BARS SHALL BE PLACED TO PROVIDE A MINIMUM COVER OF ONE INCH FROM THE SURFACE OF THE DRAIN HOLES TO THE FACE OF THE BARS.

GUARD RAIL:
CONFORM TO PROJECT PLANS AND GUARD RAIL STANDARD PLANS.

PAYMENT:
ALL WORK WILL BE PAID FOR UNDER THE DESIGNATED BRIDGE SUPERSTRUCTURE AND SUBSTRUCTURE PAY ITEM AND IN ACCORDANCE WITH THE SPECIFICATIONS.

ESTIMATED QUANTITIES (ONE SPAN)				
BAR	NO.	UNIT LENGTH	TOTAL LENGTH	LOCATION
801	8	19'-7"	156'-8"	LONGIT. BOT. OF SLAB
802	63	19'-5"	1223'-3"	LONGIT. BOT. OF SLAB
TOTAL NO. 8 BARS = 1379'-11" = 3685 LBS.				
501	56	5'-0"	280'-0"	TRANS. TOP OF SLAB
TOTAL NO. 5 BARS = 280'-0" = 292 LBS.				
401	4	19'-7"	78'-4"	LONGIT. TOP OF SLAB
402	21	19'-5"	407'-9"	LONGIT. TOP OF SLAB
* 403	4	42'-10"	171'-4"	TRANS. TOP & BOT. OF SLAB
* 404	2	43'-7"	87'-2"	TRANS. BOT. OF SLAB
* 405	50	44'-3"	2212'-6"	TRANS. TOP & BOT. OF SLAB
TOTAL NO. 4 BARS = 2957'-1" = 1975 LBS.				
TOTAL DEFORMED REINFORCING STEEL = 5952 LBS.				
CLASS A1 CONCRETE = 25.48 CU. YDS.				
CONCRETE RAILING (BARRIER TYPE) = 40.00 LIN. FT.				

* INCLUDES ONE (1) 1'-8" MINIMUM LAP SPLICE. ALL LAP SPLICES TO BE STAGGERED.

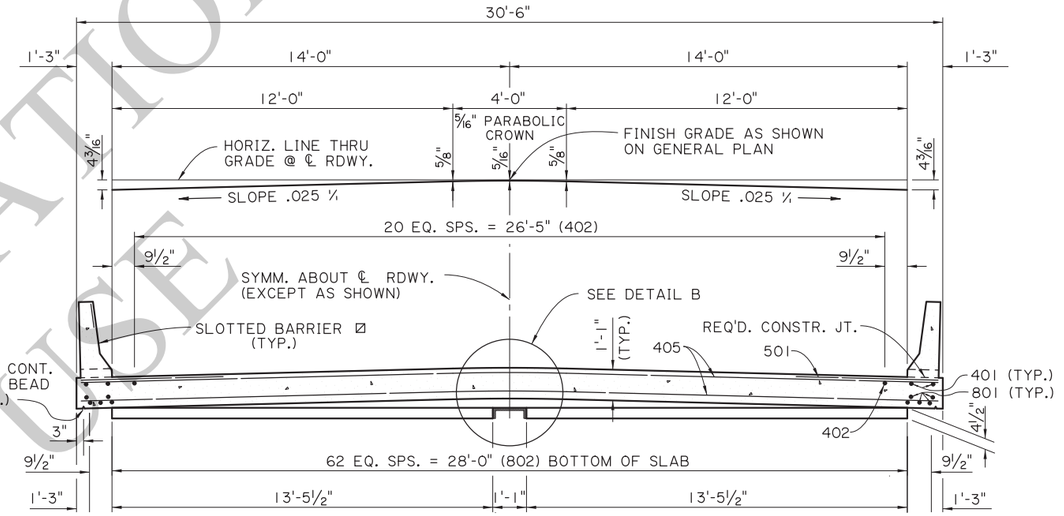

SECTION A-A
SCALE: 3/8" = 1'-0"

☒ STANDARD BARRIERS REQUIRED ON END SPANS.

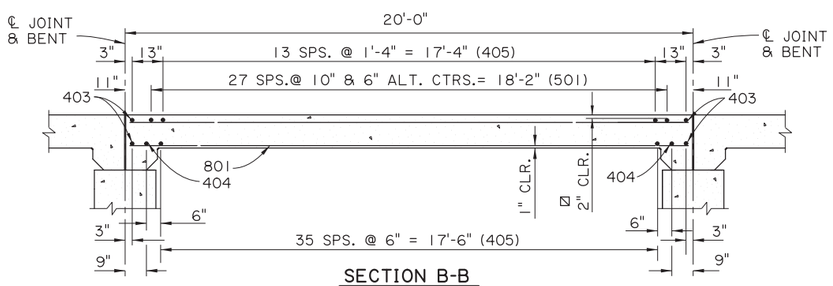

SECTION B-B
SCALE 3/8" = 1'-0"

☒ FOR BRIDGES IN DISTRICTS 04 & 05, MIN. CONCRETE COVER IN TOP OF SLAB SHALL BE 2 1/2".

SHEET NUMBER

PARISH	CONTROL SECTION	STATE PROJECT

DESIGN	CHECK	DETAIL	CHECK	REVIEW	SERIES # 2 OF 13
J. NAKHLEH	B. DELATTE	D. HYMEL	J. NAKHLEH		

APPROVED BY CHIEF ENGINEER:
DATE: 12/10/2025

NO.	DATE	REVISION OR CHANGE ORDER DESCRIPTION	BY

SPAN (1 OF 2)
20'-0" CONCRETE SLAB SPAN

28'-0" CLEAR ROADWAY
45° CROSSING TWO WAY TANGENT

PSS-45-28-20SL

DOTD
LOUISIANA DEPARTMENT OF TRANSPORTATION & DEVELOPMENT

STANDARD PLAN

FOR INFORMATIONAL USE

11/21/2025 07:4
IP_PWP:d1245750\SS4528span1(LRFD).dgn

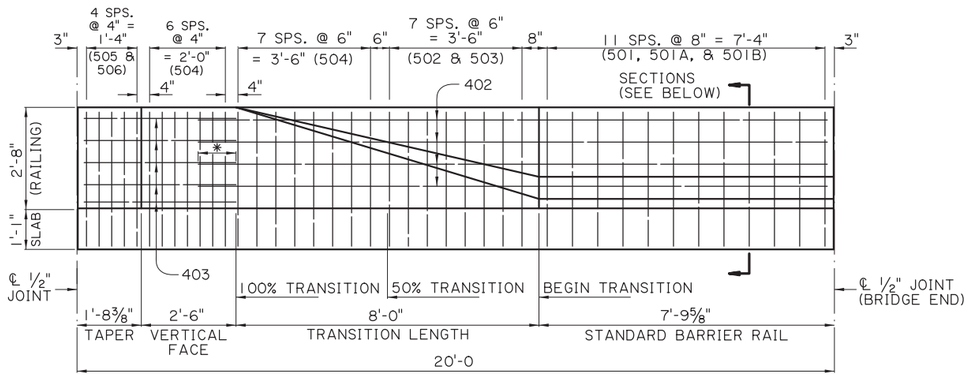

✱ 1'-0" (MIN.) SPLICE

BARRIER RAILING TRANSITION ELEVATION
(SHOWING BARRIER RAILING AT END OF BRIDGE)
SCALE: ½" = 1'-0"

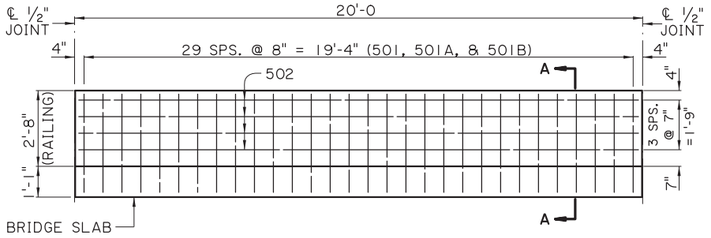

STANDARD BARRIER RAILING ELEVATION
(SHOWING BARRIER RAILING ALONG BRIDGE SLAB)
SCALE: ⅜" = 1'-0"

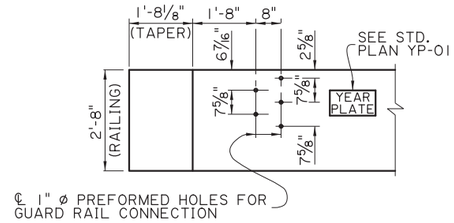

GUARD RAIL CONNECTION DETAIL
CONFORM TO GUARD RAIL STANDARD PLANS
SCALE: ½" = 1'-0"

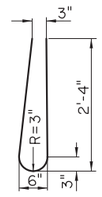

BARS 501
(4'-10" LONG)

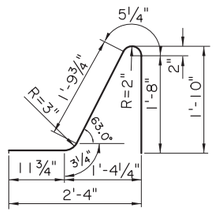

BARS 501A
(5'-2" LONG)

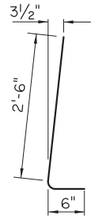

BARS 501B
(2½" ø PIN)
(3'-0" LONG)

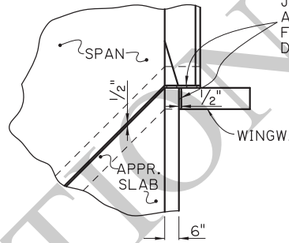

JOINT DETAIL
SCALE : ⅜" = 1'-0"

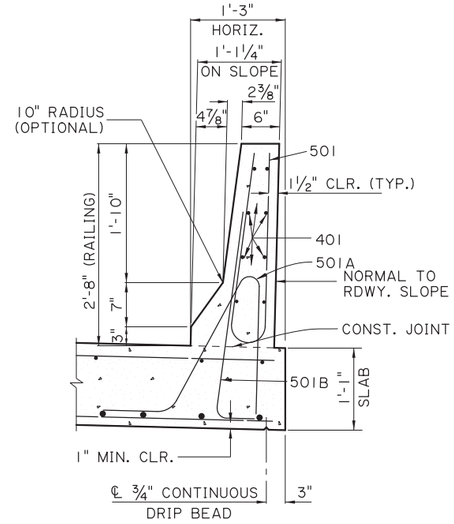

SECTION A-A
SCALE: 1" = 1'-0"

△ ON SLOPE

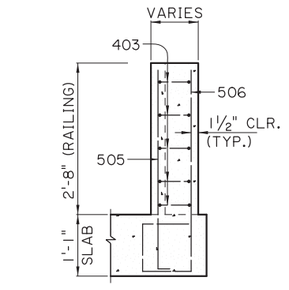

TAPER

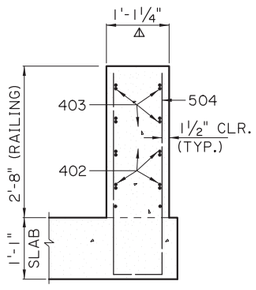

100 % TRANSITION

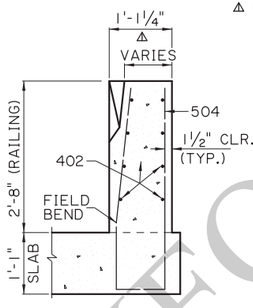

FROM 50% TO 100 % TRANSITION

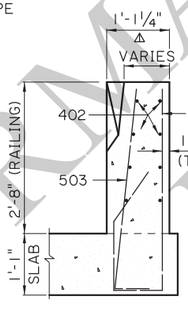

FROM BEGIN TO 50 % TRANSITION

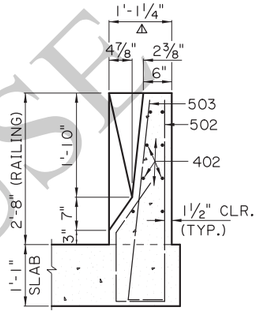

BEGIN TRANSITION

BARRIER RAILING TRANSITION SECTIONS
SCALE: ¾" = 1'-0"

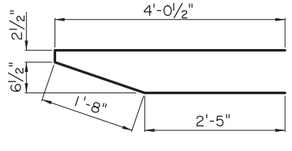

403
(2" ø PIN)

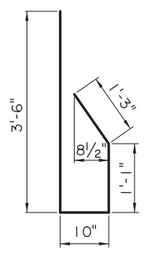

502
(2½" ø PIN)

503
(2½" ø PIN)

504
(2½" ø PIN)

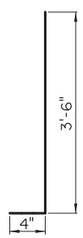

505
(2½" ø PIN)

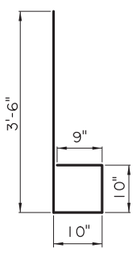

506
(2½" ø PIN)

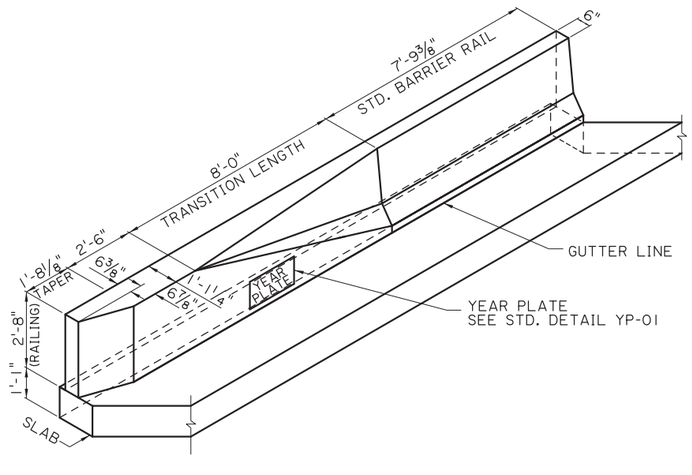

BARRIER RAILING TRANSITION SCHEMATIC
SCALE: ⅜" = 1'-0"

FOR INFORMATIONAL USE

SHEET NUMBER

PARISH | CONTROL SECTION | STATE PROJECT

DESIGN J. NAKHLEH | CHECK B. DELATTE | DETAIL D. HYMEL | CHECK J. NAKHLEH | REVIEW | SERIES # 3 OF 13

APPROVED BY CHIEF ENGINEER: DATE: 12/10/2025

NO. | DATE | REVISION OR CHANGE ORDER DESCRIPTION | BY

SPAN (2 OF 2)
20'-0" CONCRETE BARRIER

28'-0" CLEAR ROADWAY
45° CROSSING TWO WAY TANGENT

PSS-45-28-20SL

DOTD LOUISIANA DEPARTMENT OF TRANSPORTATION & DEVELOPMENT

STANDARD PLAN

11/25/2025 07:4

IP_PWP:d1245750\SS4528span2(LRFD).dgn

11/21/2025 07:5

APPROACH SLAB NOTES:

DESIGN SPECIFICATIONS: AASHTO LRFD BRIDGE DESIGN SPECIFICATIONS, 4th EDITION, WITH 2008 & 2009 INTERIMS.

STRUCTURAL CONCRETE: ALL CONCRETE SHALL BE CLASS A1. EXPOSED EDGES SHALL HAVE A ¾" CHAMFER, UNLESS SPECIFIED OTHERWISE.

REINFORCING STEEL: ALL REINFORCING STEEL SHALL BE GRADE 60. DIMENSIONS RELATING TO THE FABRICATION ARE OUT-TO-OUT OF BARS, UNLESS SPECIFIED OTHERWISE. DIMENSIONS RELATING TO SPACING ARE TO BAR CENTERS, UNLESS SPECIFIED OTHERWISE.

BEDDING MATERIAL: FOR DETAILS OF BEDDING MATERIAL AND UNDERDRAINS SEE APPROACH SLAB STANDARD DETAILS.

SAWING & SEALING: THE ASPHALT CONCRETE SHALL BE SAW CUT AT THE END OF THE CONCRETE APPROACH SLAB THE ENTIRE ROADWAY WIDTH AND SEALED WHICH WILL BE PAID FOR UNDER THE DESIGNATED ROADWAY PAY ITEM.

PAYMENT: ALL OTHER WORK WILL BE PAID FOR UNDER THE DESIGNATED BRIDGE CONCRETE APPROACH SLAB PAY ITEM AND IN ACCORDANCE WITH THE SPECIFICATIONS.

ESTIMATED QUANTITIES (ONE SLAB)

	BAR	NO.	UNIT LENGTH	TOTAL LENGTH	LOCATION
	601	2	9'-7"	19'-2"	LONGIT. BOT. OF SLAB
	602	56	9'-6"	532'-0"	LONGIT. BOT. OF SLAB
	603	2	40'-1"	80'-2"	TRANSV. BOT. OF SLAB
	604	18	40'-6"	729'-0"	TRANSV. BOT. OF SLAB
	TOTAL NO. 6 BARS = 1360'-4" = 2,043 LBS.				
	401	4	9'-7"	38'-4"	LONGIT. TOP OF SLAB & CURB
	402	28	9'-6"	266'-0"	LONGIT. TOP OF SLAB
*	403	2	41'-9"	83'-6"	TRANSV. TOP OF SLAB
*	404	9	42'-2"	379'-6"	TRANSV. TOP OF SLAB
	405	14	2'-0"	28'-0"	DOWELS IN CURB
	TOTAL NO. 4 BARS = 795'-4" = 531 LBS.				
⊙	TOTAL DEFORMED REINFORCING STEEL = 2,574 LBS.				
	CONCRETE APPROACH SLAB = 32.22 SQ. YDS.				
⊙ ☑	ASPHALT CONCRETE = 3.0 TONS				
⊙ ☑	SAW CUT & SEAL = 38 LIN. FT.				

⊙ TO BE PAID FOR UNDER ITEM CONCRETE APPROACH SLABS.
* INCLUDES ONE (1) 1'-8" MINIMUM LAP SPLICE. ALL LAP SPLICES ARE TO BE STAGGERED.
☑ REQUIRED WHEN APPROACH SLAB IS ADJACENT TO ASPHALT CONCRETE PAVEMENT.

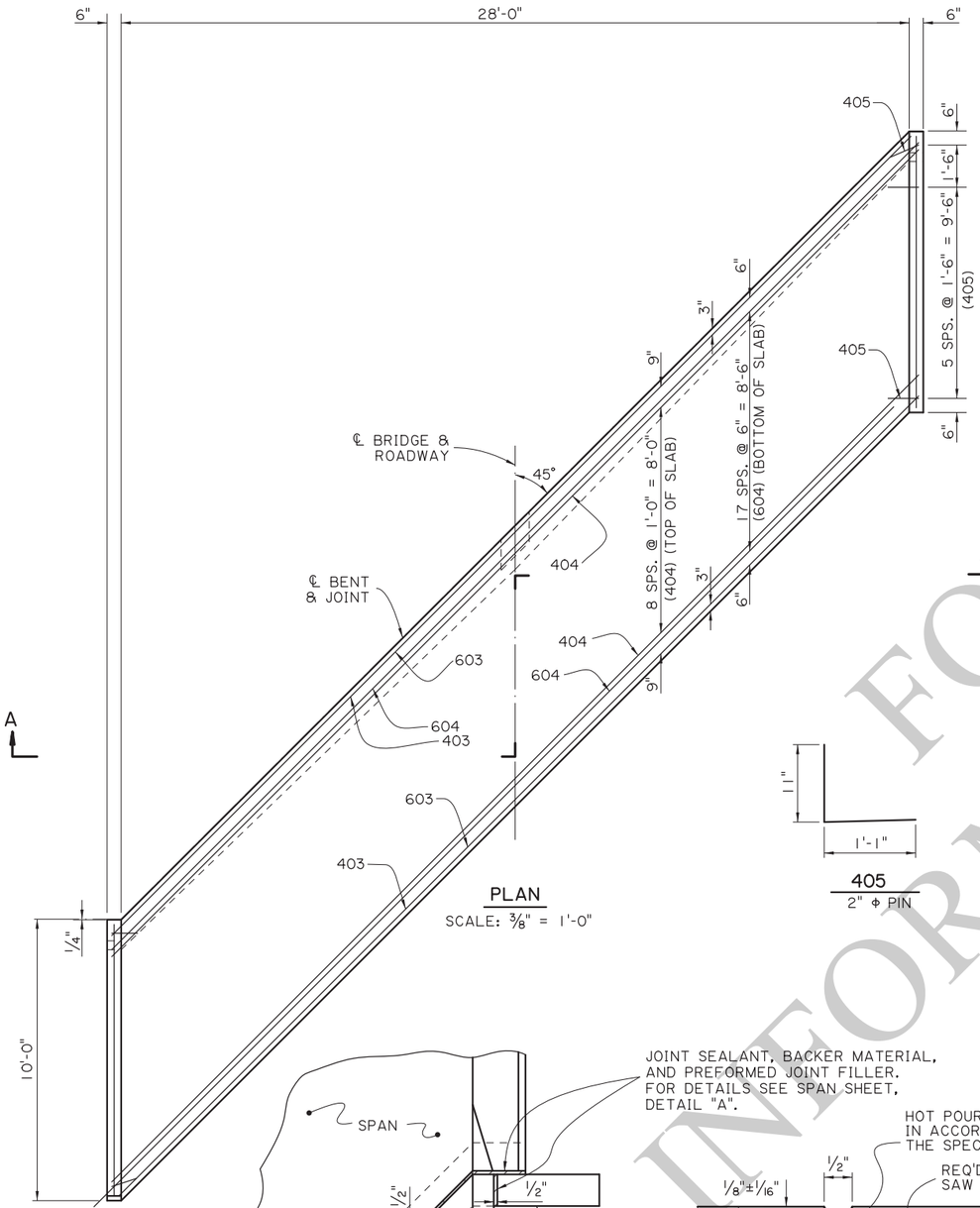

PLAN
SCALE: ⅜" = 1'-0"

405
2" ϕ PIN

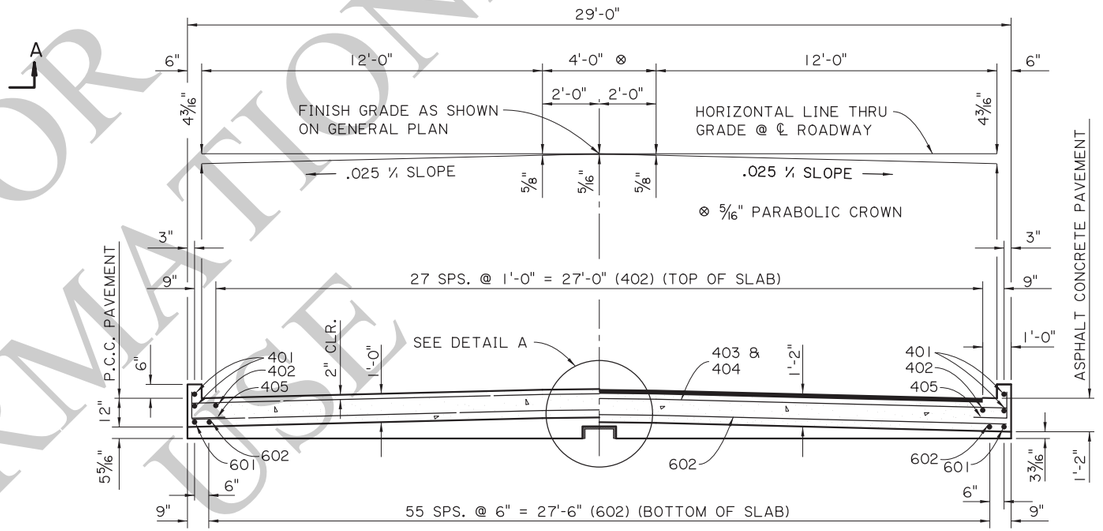

SECTION A-A
SCALE ⅜" = 1'-0"

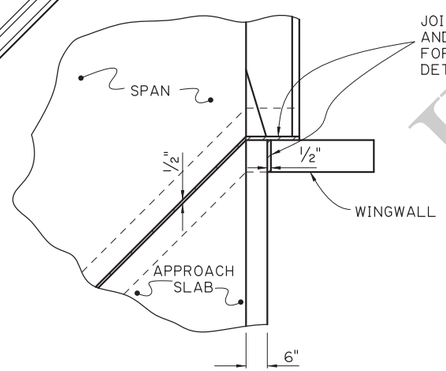

JOINT DETAIL
SCALE : ⅜" = 1'-0"

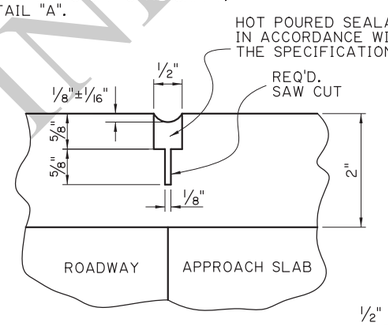

SAWING & SEALING JOINT DETAIL
N.T.S.

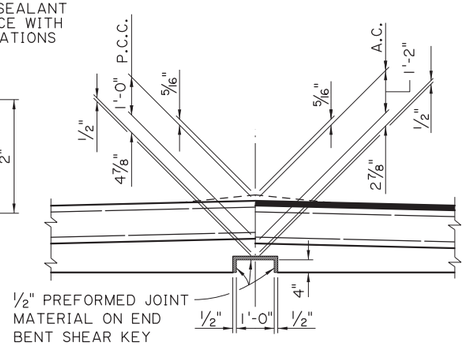

DETAIL A
SCALE : ½" = 1'-0"

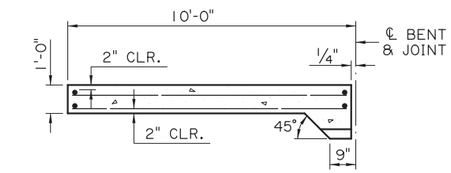

(FOR PORTLAND CEMENT CONCRETE ROADWAY PAVEMENT)

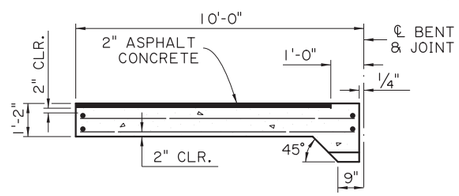

(FOR ASPHALT CONCRETE ROADWAY PAVEMENT)

SECTION ALONG ℄ ROADWAY
SCALE: ⅜" = 1'-0"

FOR INFORMATIONAL USE

SHEET NUMBER

PARISH | CONTROL SECTION | STATE PROJECT

DESIGN J. NAKHLEH | CHECK B. DELATTE | DETAIL D. HYMEL | CHECK J. NAKHLEH | REVIEW | SERIES # 4 OF 13

APPROVED BY CHIEF ENGINEER: DATE: 12/10/2025

NO. | DATE | REVISION OR CHANGE ORDER DESCRIPTION | BY

STATE OF LOUISIANA DEPARTMENT OF TRANSPORTATION AND DEVELOPMENT

APPROACH SLAB
10'-0" CONCRETE APPROACH SLAB

28'-0" CLEAR ROADWAY
45° CROSSING TWO WAY TANGENT

PSS-45-28-20SL

DOTD LOUISIANA DEPARTMENT OF TRANSPORTATION & DEVELOPMENT

STANDARD PLAN

IP_PWP:d1245750\SS4528aprslab(LRFD).dgn

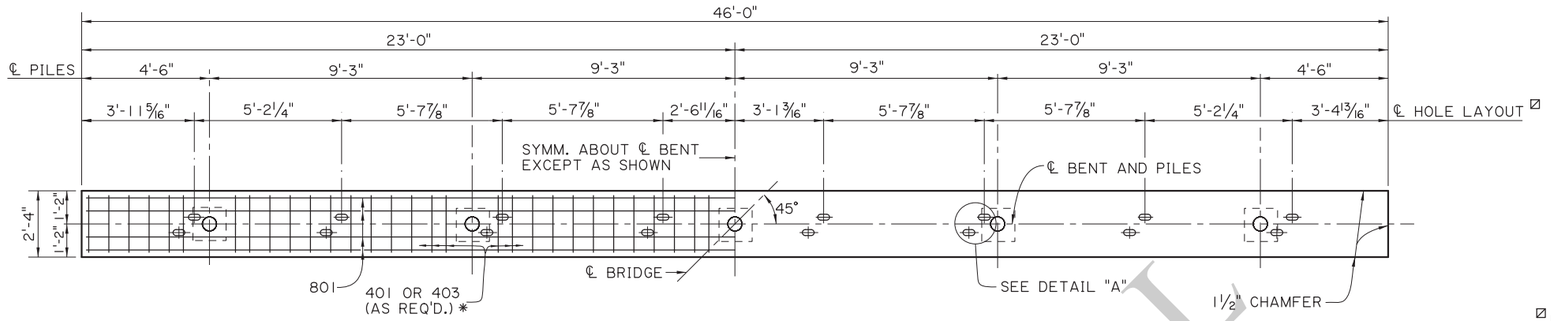

PLAN - INTERMEDIATE BENT
SCALE ⅜" = 1'-0"

☑ HOLES ARE OPTIONAL AT EXPANSION ENDS.

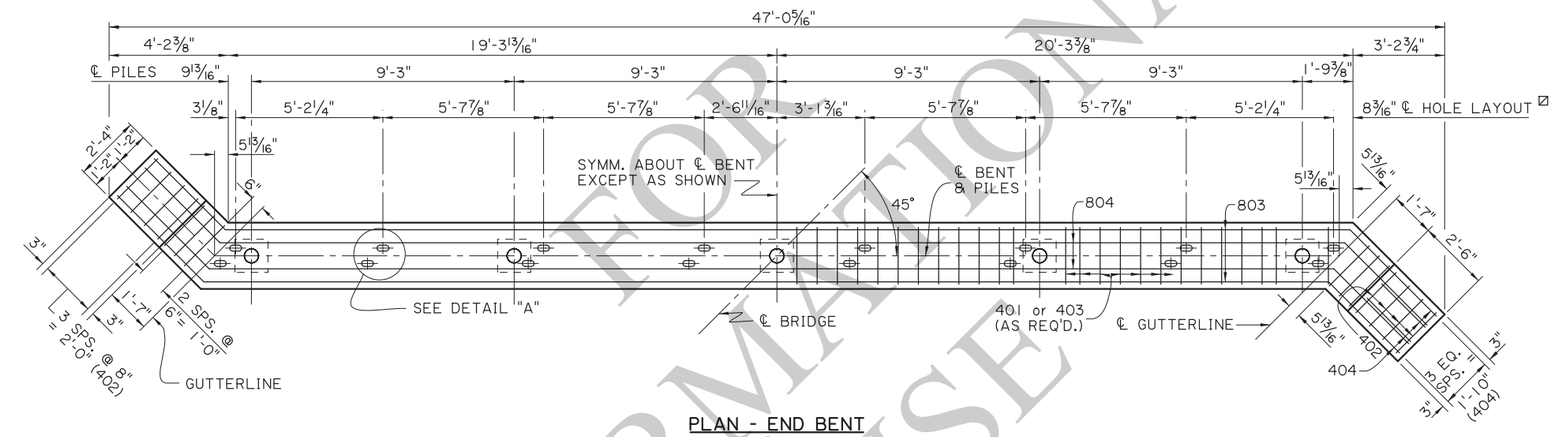

PLAN - END BENT
SCALE ⅜" = 1'-0"

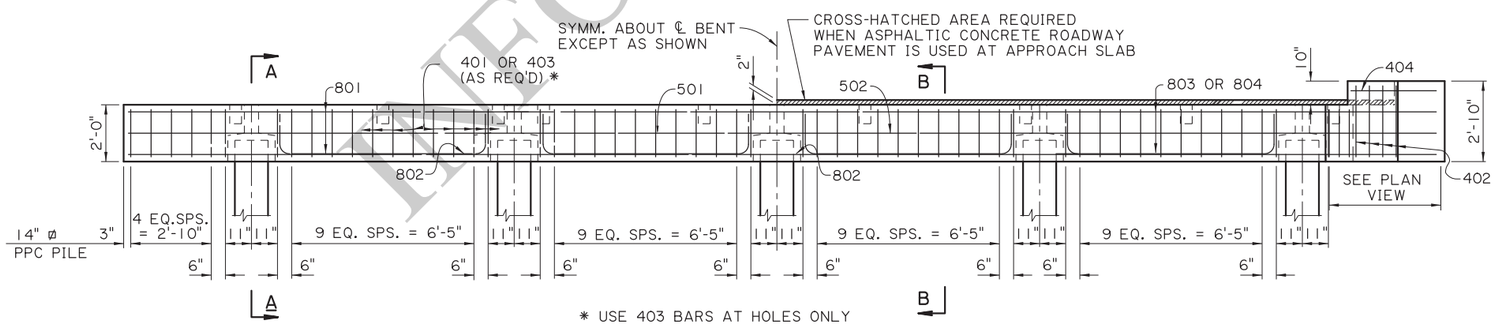

HALF ELEVATION - INTERMEDIATE BENT
SCALE ⅜" = 1'-0"

HALF ELEVATION - END BENT
SCALE ⅜" = 1'-0"

INFORMATIONAL USE

SHEET NUMBER

PARISH	CONTROL SECTION	STATE PROJECT

DESIGN	B. DELATTE	DETAIL	D. HYMEL	REVIEW	SERIES # 5 OF 13
CHECK	J. NAKHLEH	CHECK	J. NAKHLEH		

APPROVED BY CHIEF ENGINEER:

DATE: 12/10/2025

NO.	DATE	REVISION OR CHANGE ORDER DESCRIPTION	BY

ALTERNATE BENTS (1 OF 2)
PRECAST CONCRETE BENTS

28'-0" CLEAR ROADWAY
45° CROSSING TWO WAY TANGENT

PSS-45-28-20SL

DOTD
LOUISIANA DEPARTMENT OF TRANSPORTATION & DEVELOPMENT

STANDARD PLAN

11/21/2025 07:5

IP_PWP:d1245750\SS4528altbent1a(LRFD).dgn

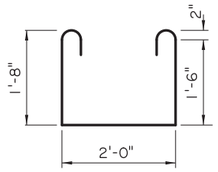

403
2" ø PIN

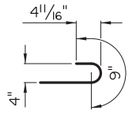

180° HOOK FOR
403 BARS
3" ø PIN

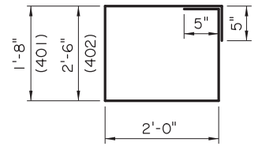

401 & 402
2" ø PIN

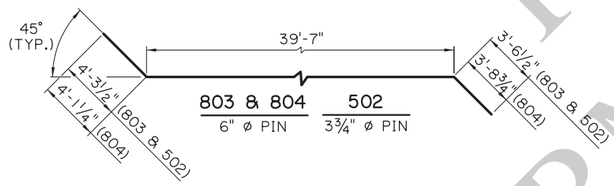

803 & 804
6" ø PIN

502
3 3/4" ø PIN

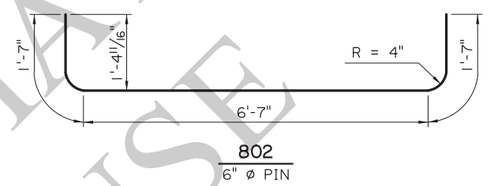

802
6" ø PIN

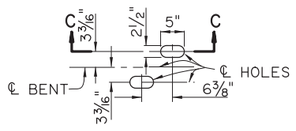

DETAIL A
SCALE ¾" = 1'-0"

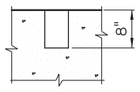

SECTION C-C
SCALE ¾" = 1'-0"

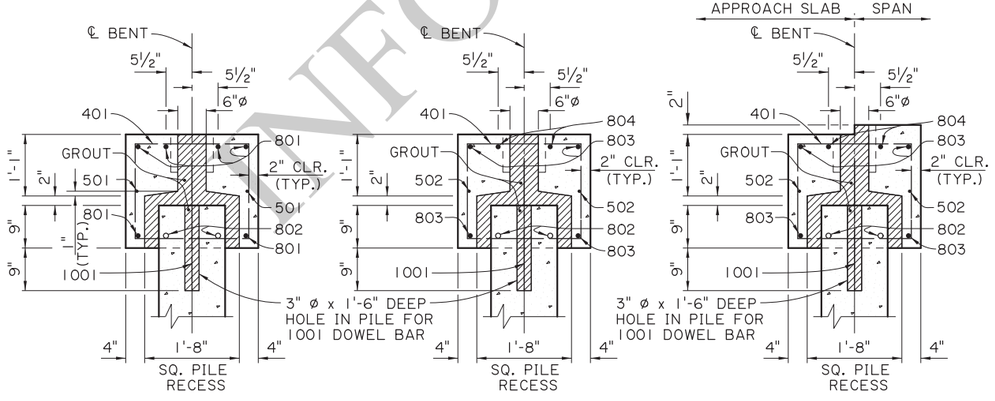

SECTION A-A
SCALE: ¾" = 1'-0"

SECTION B-B
SCALE: ¾" = 1'-0"
(WHEN PORTLAND CEMENT CONCRETE
ROADWAY PAVEMENT
IS USED AT APPROACH SLAB)

SECTION B-B
SCALE: ¾" = 1'-0"
(WHEN ASPHALTIC CONCRETE
ROADWAY PAVEMENT
IS USED AT APPROACH SLAB)

ALTERNATE BENT NOTES:

DESIGN SPECIFICATIONS: AASHTO LRFD BRIDGE DESIGN SPECIFICATIONS, 4th EDITION, WITH 2008 & 2009 INTERIMS.
DESIGN LOAD: LIVE LOAD IS HL-93, AND LADV-11 (LOUISIANA DESIGN VEHICLE LIVE LOAD 2011).
STRUCTURAL CONCRETE: ALL CONCRETE SHALL BE CLASS P1. STEEL SIDE FORMS AND STEEL OR CONCRETE BOTTOM FORMS SHALL BE USED FOR PRECAST COMPONENTS. EXPOSED EDGES SHALL HAVE A ¾" CHAMFER UNLESS SPECIFIED OTHERWISE. ALL SURFACES SHALL RECEIVE A CLASS I ORDINARY SURFACE FINISH UPON REMOVAL OF THE FORMS. ALL EXPOSED FACES OF WINGWALLS AND ENDS OF CAPS SHALL RECEIVE A CLASS 3 SPECIAL SURFACE FINISH.
REINFORCING STEEL: ALL REINFORCING SHALL BE GRADE 60. DIMENSIONS RELATING TO FABRICATION ARE OUT TO OUT OF BARS, UNLESS SPECIFIED OTHERWISE. DIMENSIONS RELATING TO SPACING ARE TO BAR CENTERS, UNLESS SPECIFIED OTHERWISE.
GROUT: THE GROUT SHALL BE AN APPROVED FLOWABLE NON-SHRINK GROUT LISTED ON AML. THE GROUT SHALL BE TESTED FOR ACCEPTANCE PRIOR TO USAGE. SURFACES SHALL BE THOROUGHLY SATURATED WITH WATER BY FLOODING THE VOID FOR APPROXIMATELY 5 MINUTES IMMEDIATELY BEFORE THE GROUT IS PLACED. ONLY POTABLE WATER SHALL BE USED FOR SATURATION AND MIXING PURPOSES.
PRECAST UNITS: THE PLANS FOR AN ONGOING OPERATION OF FABRICATING FACILITIES SHALL BE APPROVED BY THE DEPARTMENT. EACH UNIT SHALL HAVE THE FABRICATOR'S MARK AND UNIQUE NUMBER, MEETING THE APPROVAL OF THE ENGINEER, STAMPED OR SCRIBED IN THE PLASTIC CONCRETE. ALL UNITS SHALL BE HELD AT THE PLANT FOR A MINIMUM OF 10 DAYS AFTER CASTING. THE CONCRETE SHALL REACH A MINIMUM STRENGTH OF 3,000 PSI BEFORE HANDLING IS PERMITTED. THE LIFTING INSERTS SHALL BE 1" TYPE S INSERTS AS MANUFACTURED BY DAYTON-SUPERIOR CORPORATION OR AN APPROVED EQUAL. EACH INSERT SHALL HAVE A MINIMUM LOAD CAPACITY OF 10,000 POUNDS. FOUR INSERTS WITH 1" ø x 5" LONG COIL BOLTS SHALL BE PLACED IN THE TOP OF THE UNITS AND LOCATED AT A DISTANCE 21% OF ITS LENGTH (+/- 6") FROM EACH END AND 6" FROM THE EDGES. INSERT HOLES SHALL BE GROUT FILLED AFTER PLACEMENT OF THE UNIT. AT THE CONTRACTOR'S OPTION, A SLING OF SUFFICIENT CAPACITY MAY BE USED FOR LIFTING, PROVIDED THE SAME PICKUP LOCATIONS FROM THE ENDS ARE USED.
PRECAST CONCRETE PILES: CONFORM TO PILE STANDARD PLAN AND PROJECT PLANS FOR FABRICATION AND INSTALLATION. IF TOP CENTER OF DRIVEN PILE IS OUTSIDE OF SPECIFIED HORIZONTAL TOLERANCES BUT WITHIN SPECIFIED VERTICAL TOLERANCES, PROVIDE CAST-IN-PLACE BENT CAP IN ACCORDANCE WITH THIS STANDARD PLAN. PILES WILL BE PAID FOR UNDER THE DESIGNATED PILE PAY ITEMS.
PAYMENT: ALL OTHER WORK WILL BE PAID FOR UNDER THE DESIGNATED BRIDGE SUPERSTRUCTURE AND SUBSTRUCTURE PAY ITEM AND IN ACCORDANCE WITH THE SPECIFICATIONS.

FOR INFORMATIONAL USE

ESTIMATED QUANTITIES (ONE INTER. BENT)

BAR	NO.	UNIT LENGTH	TOTAL LENGTH	LOCATION
1001	5	2'-4"	11'-8"	DOWELS IN PILES
TOTAL NO. 10 BARS = 11'-8" = 50 LBS.				
801	6	45'-8"	274'-0"	LONGIT. IN CAP
802	8	9'-9"	78'-0"	LONGIT. IN CAP BTW. PILES
TOTAL NO. 8 BARS = 352'-0" = 940 LBS.				
501	2	45'-8"	91'-4"	LONGIT. IN CAP
TOTAL NO. 5 BARS = 91'-4" = 95 LBS.				
401	52	8'-2"	424'-8"	STIRRUPS IN CAP
403	8	6'-6"	52'-0"	STIRRUPS IN CAP
TOTAL NO. 4 BARS = 476'-8" = 318 LBS.				
TOTAL DEFORMED REINFORCING STEEL = 1403 LBS.				
TOTAL CLASS P1 CONCRETE = 7.39 CU. YDS.				
MAX. PILE LOAD: SERVICE DEAD LOAD = 22 TONS SERVICE LIVE LOAD = 33 TONS FACTORED TOTAL LOAD = 76 TONS				
TOTAL GROUT FOR PILE RECESSES = 0.36 CU. YDS.				

ESTIMATED QUANTITIES (ONE END BENT)

BAR	NO.	UNIT LENGTH	TOTAL LENGTH	LOCATION
1001	5	2'-4"	11'-8"	DOWELS IN PILES
TOTAL NO. 10 BARS = 11'-8" = 50 LBS.				
802	8	9'-9"	78'-0"	LONGIT. IN CAP BTW. PILES
803	4	47'-5"	189'-8"	LONGIT. IN CAP
804	2	47'-5"	94'-10"	LONGIT. IN CAP
TOTAL NO. 8 BARS = 362'-6" = 968 LBS.				
502	2	47'-7"	94'-10"	LONGIT. IN CAP
TOTAL NO. 5 BARS = 94'-10" = 99 LBS.				
401	48	8'-2"	392'-0"	STIRRUPS IN CAP
402	8	9'-10"	78'-8"	STIRRUPS IN WINGWALL
403	8	6'-6"	52'-0"	STIRRUPS IN CAP
404	8	2'-2"	17'-4"	LONGIT. IN WINGWALL
TOTAL NO. 4 BARS = 540'-0" = 361 LBS.				
TOTAL DEFORMED REINFORCING STEEL = 1,478 LBS.				
⊗ TOTAL CLASS P1 CONCRETE = 8.05 CU. YDS.				
MAX. PILE LOAD: SERVICE DEAD LOAD = 22 TONS SERVICE LIVE LOAD = 33 TONS FACTORED TOTAL LOAD = 76 TONS				
TOTAL GROUT FOR PILE RECESSES = 0.36 CU. YDS.				

⊗ ADD 0.31 CU. YDS. OF CLASS P1 CONCRETE PER BENT WHEN ASPHALTIC CONCRETE ROADWAY PAVEMENT IS USED AT APPROACH SLAB.

AS-DESIGNED RATING

VEHICLE	RATING FACTOR	NOTES
HL-93 (INV)	1.605	———
HL-93 (OPR)	2.081	———
LADV-11 (INV)	1.235	MAGNIFICATION FACTOR = 1.3

SHEET NUMBER

PARISH | CONTROL SECTION | STATE PROJECT

DESIGN: B. DELATTE | CHECK: J. NAKHLEH | DETAIL: D. HYMEL | CHECK: J. NAKHLEH | REVIEW: J. NAKHLEH | SERIES # 6 OF 13

APPROVED BY CHIEF ENGINEER: DATE: 12/10/2025

NO. | DATE | REVISION OR CHANGE ORDER DESCRIPTION | BY

STATE OF LOUISIANA — DEPARTMENT OF TRANSPORTATION AND DEVELOPMENT

ALTERNATE BENTS (2 OF 2)
PRECAST CONCRETE BENTS

28'-0" CLEAR ROADWAY
45° CROSSING TWO WAY TANGENT

PSS-45-28-20SL

DOTD
LOUISIANA DEPARTMENT OF TRANSPORTATION & DEVELOPMENT

STANDARD PLAN

11/25/2025 08:0

IP_PWP:d1245750\SS4528alt1bent1b(LRFD).dgn

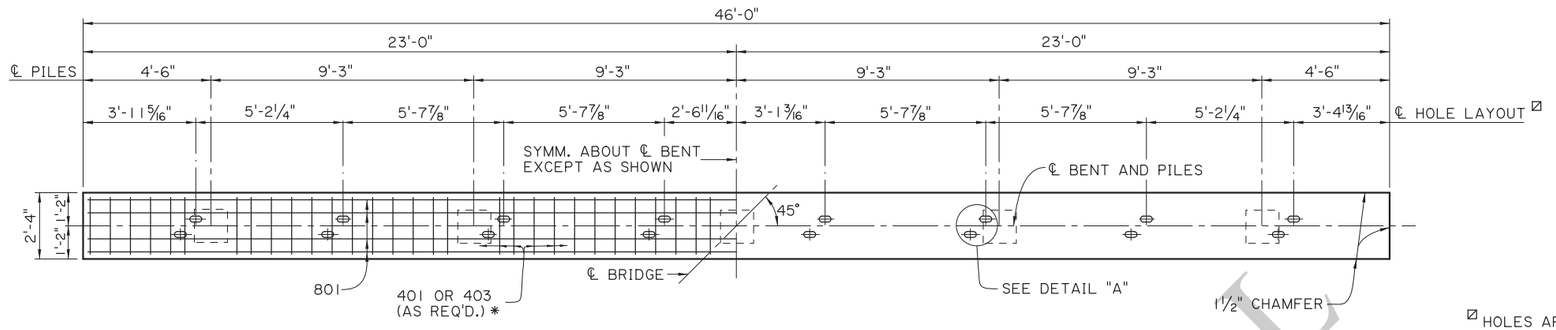

☑ HOLES ARE OPTIONAL AT EXPANSION ENDS.

PLAN - INTERMEDIATE BENT

SCALE 3/8" = 1'-0"

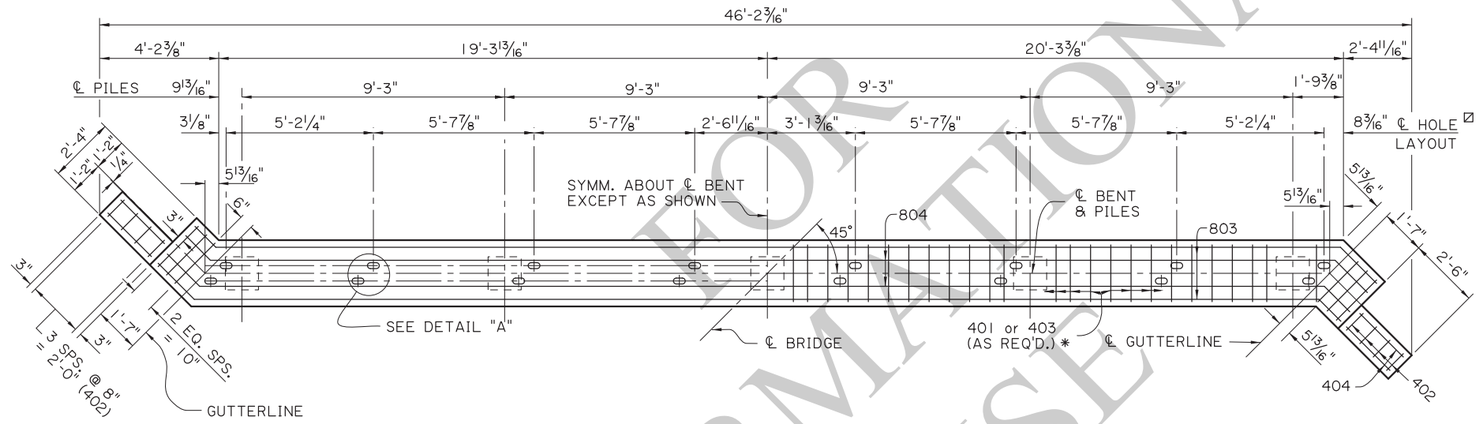

PLAN - END BENT

SCALE 3/8" = 1'-0"

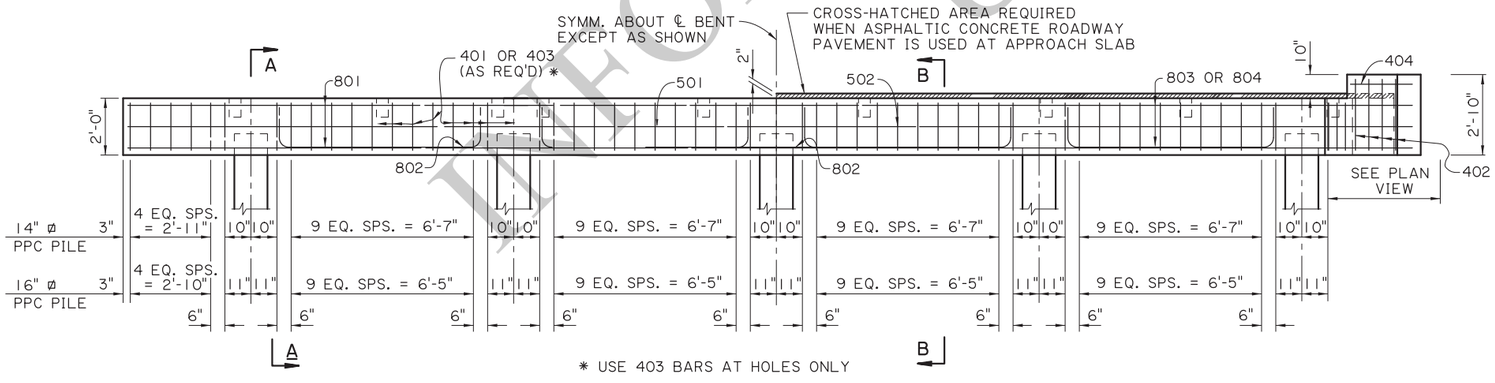

HALF ELEVATION - INTERMEDIATE BENT

SCALE 3/8" = 1'-0"

HALF ELEVATION - END BENT

SCALE 3/8" = 1'-0"

FOR INFORMATIONAL USE ONLY

SHEET NUMBER

PARISH	CONTROL SECTION	STATE PROJECT

DESIGN	CHECK	DETAIL	CHECK	REVIEW	SERIES #
B. DELATTE	J. NAKHLEH	D. HYMEL	B. DELATTE		7 OF 13

APPROVED BY CHIEF ENGINEER: DATE: 12/10/2025

NO.	DATE	REVISION OR CHANGE ORDER DESCRIPTION	BY

ALTERNATE BENTS (1 OF 2)
CAST-IN-PLACE CONCRETE BENTS

28'-0" CLEAR ROADWAY
45° CROSSING TWO WAY TANGENT

PSS-45-28-20SL

DOTD
LOUISIANA DEPARTMENT OF TRANSPORTATION & DEVELOPMENT

STANDARD PLAN

11/21/2025 08:0
IP_PWP:d1245750\SS4528altbent2a(LRFD).dgn

11/25/2025 08:0

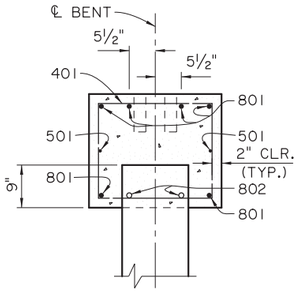

SECTION A-A
SCALE: ¾" = 1'-0"

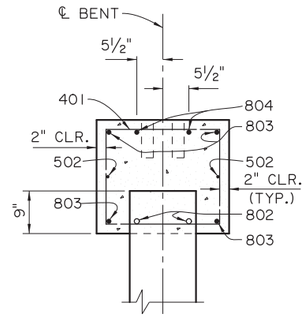

SECTION B-B
SCALE :¾" = 1'-0"
(WHEN PORTLAND CONCRETE ROADWAY PAVEMENT IS USED AT APPROACH SLAB)

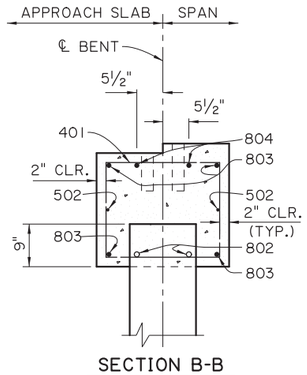

SECTION B-B
SCALE :¾" = 1'-0"
(WHEN ASPHALTIC CONCRETE ROADWAY PAVEMENT IS USED AT APPROACH SLAB)

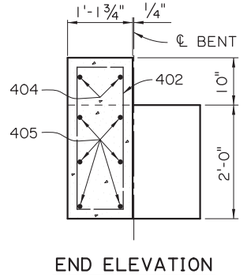

END ELEVATION
SCALE: ¾" = 1'-0"

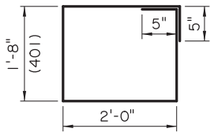

401
2" ø PIN

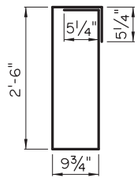

402
2" ø PIN

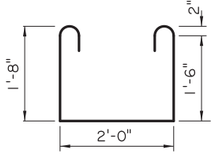

403
2" ø PIN

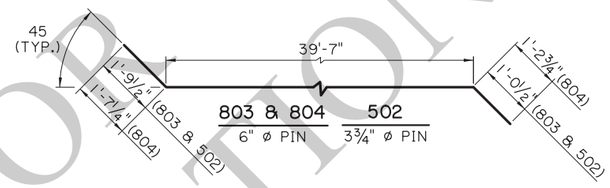

802
6" ø PIN

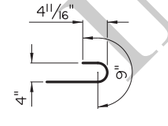

180° HOOK FOR 403 BARS
3" ø PIN

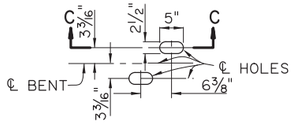

DETAIL A
SCALE ¾" = 1'-0"

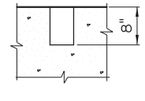

SECTION C-C
SCALE ¾" = 1'-0"

ALTERNATE BENT NOTES:

DESIGN SPECIFICATIONS: AASHTO LRFD BRIDGE DESIGN SPECIFICATIONS, 4th EDITION, WITH 2008 & 2009 INTERIMS.

DESIGN LOAD: LIVE LOAD IS HL-93, AND LADV-11 (LOUISIANA DESIGN VEHICLE LIVE LOAD 2011).

STRUCTURAL CONCRETE: ALL CONCRETE SHALL BE CLASS A1. EXPOSED EDGES SHALL HAVE A ¾" CHAMFER UNLESS SPECIFIED OTHERWISE. ALL EXPOSED FACES OF WINGWALLS AND ENDS OF CAPS SHALL RECEIVE A SURFACE FINISH AS PER THE SPECIFICATIONS UNLESS SPECIFIED OTHERWISE.

REINFORCING STEEL: ALL REINFORCING SHALL BE GRADE 60. DIMENSIONS RELATING TO FABRICATION ARE OUT TO OUT OF BARS, UNLESS SPECIFIED OTHERWISE. DIMENSIONS RELATING TO SPACING ARE TO BAR CENTERS, UNLESS SPECIFIED OTHERWISE.

PRECAST CONCRETE PILES: CONFORM TO PILE STANDARD PLAN AND PROJECT PLANS FOR FABRICATION AND INSTALLATION. IF TOP CENTER OF DRIVEN PILE IS OUTSIDE OF SPECIFIED HORIZONTAL TOLERANCES BUT WITHIN SPECIFIED VERTICAL TOLERANCES, PROVIDECAST-IN-PLACE BENT CAP IN ACCORDANCE WITH THIS STANDARD PLAN. PILES WILL BE PAID FOR UNDER THE DESIGNATED PILE PAY ITEMS.

PAYMENT: ALL OTHER WORK WILL BE PAID FOR UNDER THE DESIGNATED BRIDGE SUPERSTRUCTURE AND SUBSTRUCTURE PAY ITEM AND IN ACCORDANCE WITH THE SPECIFICATIONS.

ESTIMATED QUANTITIES (ONE INTER. BENT)

BAR	NO.	UNIT LENGTH	TOTAL LENGTH	LOCATION
801	6	45'-8"	274'-0"	LONGIT. IN CAP
802	8	10'-1"	80'-8"	LONGIT. IN CAP BTW. PILES
TOTAL NO. 8 BARS = 354'-8" = 947 LBS.				
501	2	45'-8"	91'-4"	LONGIT. IN CAP
TOTAL NO. 5 BARS = 91-4" = 95 LBS.				
401	52	8'-2"	424'-8"	STIRRUPS IN CAP
403	8	6'-6"	52'-0"	STIRRUPS IN CAP
TOTAL NO. 4 BARS = 476'-8" = 318 LBS.				
TOTAL DEFORMED REINFORCING STEEL= 1360 LBS.				
⊠ TOTAL CLASS A1 CONCRETE = 7.67 CU. YDS.				
MAX. PILE LOAD: SERVICE DEAD LOAD = 22 TONS SERVICE LIVE LOAD = 33 TONS FACTORED TOTAL LOAD = 76 TONS				

⊠ 16" ø PPC PILES USED FOR ESTIMATING PURPOSES ONLY. (ADD 0.06 CU. YDS. OF CLASS A1 CONCRETE PER BENT WHEN 14" ø PPC PILES ARE USED.)

ESTIMATED QUANTITIES (ONE END BENT)

BAR	NO.	UNIT LENGTH	TOTAL LENGTH	LOCATION
802	8	10'-1"	80'-8"	LONGIT. IN CAP BTW. PILES
803	4	42'-5"	169'-8"	LONGIT. IN CAP
804	2	42'-5"	84'-10"	LONGIT. IN CAP
TOTAL NO. 8 BARS = 335'-2" = 895 LBS.				
502	2	42-5"	84'-10"	LONGIT. IN CAP
TOTAL NO. 5 BARS = 84-10" = 88 LBS.				
401	48	8'-2"	392'-0"	STIRRUPS IN CAP
402	8	7'-6"	60'-0"	STIRRUPS IN WINGWALL
403	8	6'-6"	52'-0"	STIRRUPS IN CAP
404	4	2'-2"	8'-8"	LONGIT. IN WINGWALL
405	12	3'-11"	47'-0"	LONGIT. IN WINGWALL
TOTAL NO. 4 BARS = 559'-8" = 374 LBS.				
TOTAL DEFORMED REINFORCING STEEL= 1,357 LBS.				
⊗ TOTAL CLASS A1 CONCRETE = 7.72 CU. YDS.				
MAX. PILE LOAD: SERVICE DEAD LOAD = 22 TONS SERVICE LIVE LOAD = 33 TONS FACTORED TOTAL LOAD = 76 TONS				

⊗ 16" ø PPC PILES USED FOR ESTIMATING PURPOSES ONLY. (ADD 0.06 CU. YDS. OF CLASS A1 CONCRETE PER BENT WHEN 14" ø PPC PILES ARE USED.) ADD 0.31 CU. YDS. OF CLASS A1 CONCRETE PER BENT WHEN ASPHALTIC CONCRETE ROADWAY PAVEMENT IS USED AT APPROACH SLAB.

AS-DESIGNED RATING

VEHICLE	RATING FACTOR	NOTES
HL-93 (INV)	1.333	———
HL-93 (OPR)	1.729	———
LADV-11 (INV)	1.026	MAGNIFICATION FACTOR = 1.3

FOR INFORMATIONAL USE

SHEET NUMBER

PARISH | CONTROL SECTION | STATE PROJECT

DESIGN B. DELATTE | CHECK J. NAKHLEH | DETAIL D. HYMEL | CHECK J. NAKHLEH | REVIEW | SERIES # 8 OF 13

APPROVED BY CHIEF ENGINEER: DATE: 12/10/2025

NO. | DATE | REVISION OR CHANGE ORDER DESCRIPTION | BY

STATE OF LOUISIANA DEPARTMENT OF TRANSPORTATION AND DEVELOPMENT

ALTERNATE BENTS (2 OF 2) CAST-IN-PLACE CONCRETE BENTS

28'-0" CLEAR ROADWAY
45° CROSSING TWO WAY TANGENT

PSS-45-28-20SL

DOTD LOUISIANA DEPARTMENT OF TRANSPORTATION & DEVELOPMENT

STANDARD PLAN

IP_PWP:d1245750\SS4528altbent2b(LRFD).dgn

08:2
11/21/2025

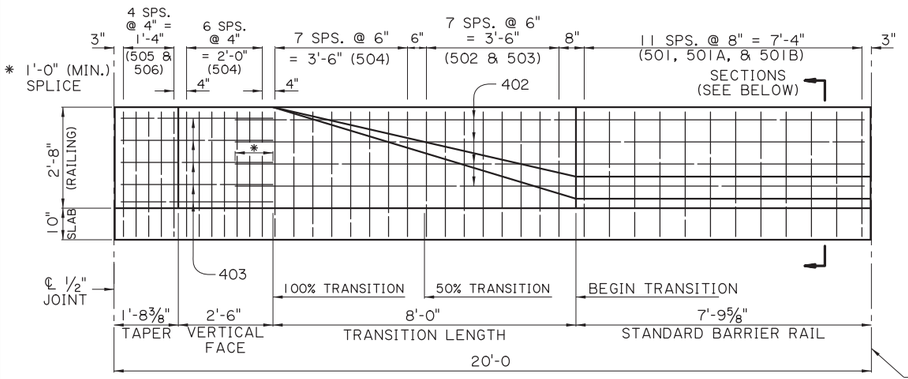

BARRIER RAILING TRANSITION ELEVATION
(SHOWING BARRIER RAILING AT END OF BRIDGE)
SCALE: ½" = 1'-0"

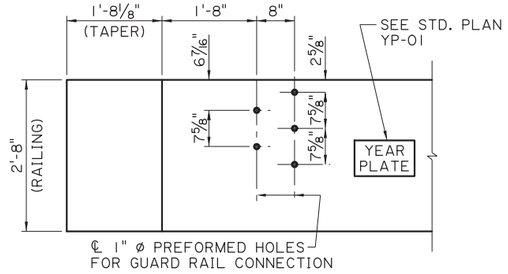

GUARD RAIL CONNECTION DETAIL
CONFORM TO GUARD RAIL STANDARDS
SCALE : ¾" = 1'-0"

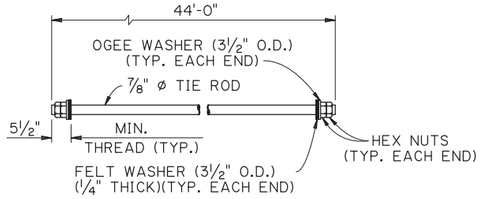

NOTE:
THE NUTS & WASHERS FOR THE TIE ROD SHALL BE ZINC COATED AND THE EXPOSED ENDS TO THE TIE RODS SHALL BE PAINTED WITH AN APPROVED COATING. AS A FINAL OPERATION THE CONTRACTOR SHALL BE REQUIRED TO TORQUE THE INSTALLED TIE ROD TO 170 FT. LBS. JUST PRIOR TO PAINTING. ALL EXPOSED ENDS SHALL BE PAINTED WITH AN APPROVED COATING AFTER STRESSING. ONE (1) MECHANICAL SPLICE MAY BE USED IN SPLICING THE ⅞" ø TIE ROD. THE SPLICE SHALL DEVELOP AT LEAST 125% OF THE SPECIFIED YIELD STRENGTH OF THE TIE ROD IN TENSION. THE MECHANICAL SPLICE SHALL BE ZINC COATED OR PAINTED WITH AN APPROVED COLD GALVANIZING REPAIR COMPOUND FROM AML PRIOR TO PLACING THE TIE ROD IN THE STRUCTURE.

DETAILS OF TIE ROD

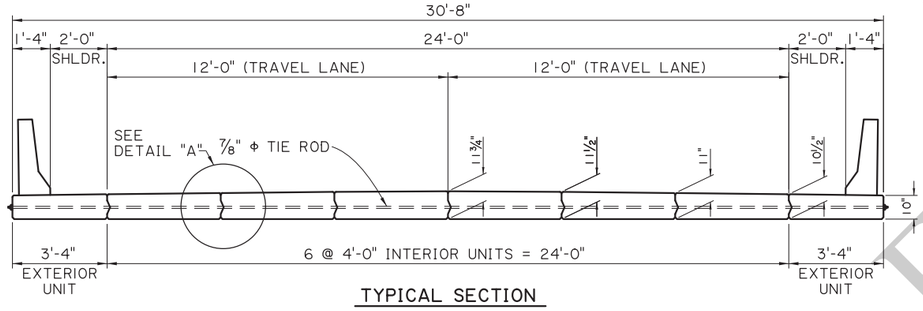

TYPICAL SECTION

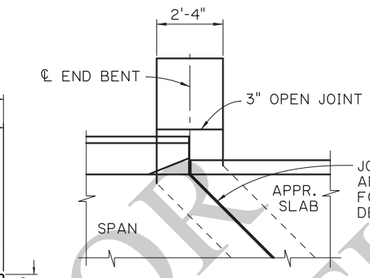

JOINT DETAIL
N.T.S.

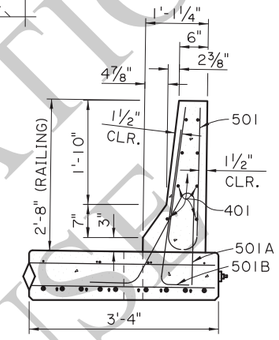

SECTION A-A
SCALE : ¾" = 1'-0"

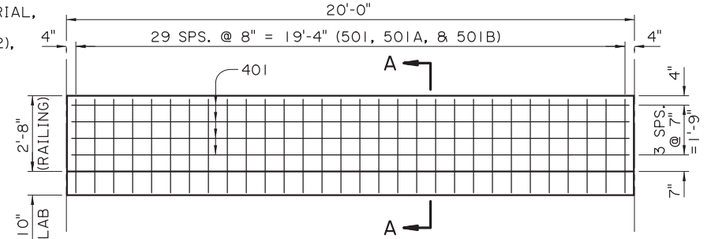

STANDARD BARRIER RAILING ELEVATION
(SHOWING BARRIER RAILING ALONG BRIDGE END)
SCALE : ⅜" = 1'-0"

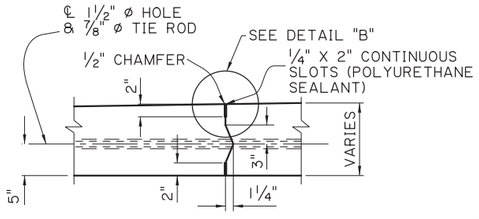

DETAIL "A"
SCALE: 1" = 1'-0"

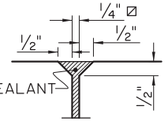

DETAIL "B"
SCALE: 1" = 1'-0"

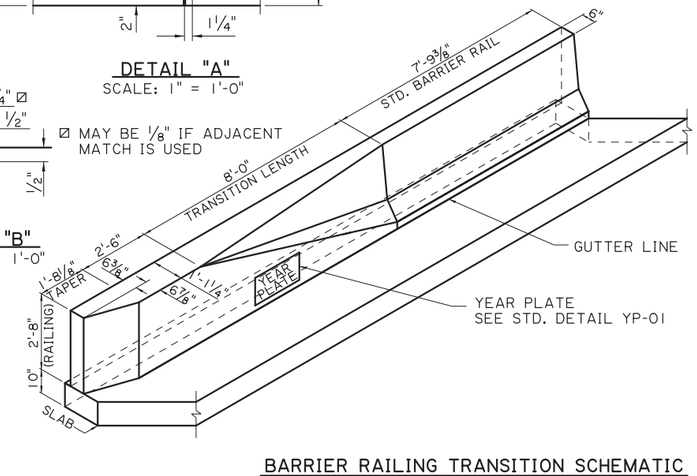

BARRIER RAILING TRANSITION SCHEMATIC
SCALE : ⅜" = 1'-0"

BARRIER RAILING TRANSITION SECTIONS
SCALE : ¾" = 1'-0"

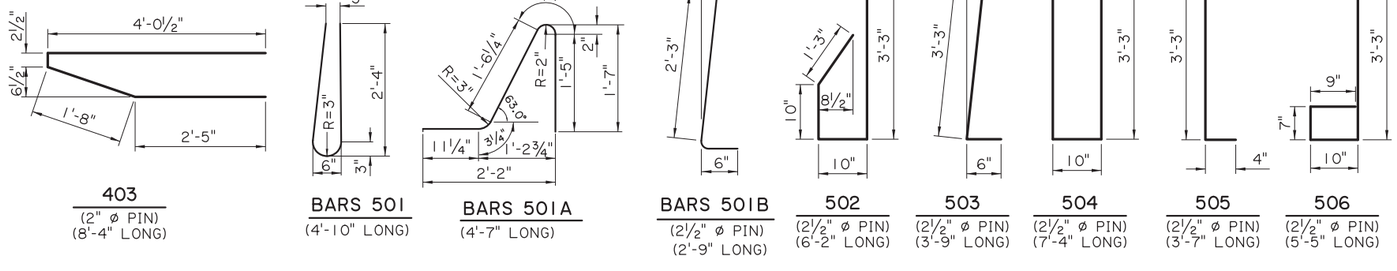

FOR INFORMATIONAL USE

SHEET NUMBER	
PARISH	
CONTROL SECTION	
STATE PROJECT	
DESIGN B. DELATTE / CHECK J. NAKHLEH	DETAIL D. HYMEL / CHECK J. NAKHLEH
REVIEW	SERIES # 9 OF 13

APPROVED BY CHIEF ENGINEER:
DATE: 12/10/2025

NO.	DATE	REVISION OR CHANGE ORDER DESCRIPTION	BY

STATE OF LOUISIANA — LIBERTY, JUSTICE AND WISDOM FOR ALL — ESTD. 1812

ALTERNATE SPAN (1 OF 4)
20'-0" PRECAST CONC. SLAB SPAN

28'-0" CLEAR ROADWAY
45° CROSSING TWO WAY TANGENT

PSS-45-28-20SL

DOTD — LOUISIANA DEPARTMENT OF TRANSPORTATION & DEVELOPMENT

STANDARD PLAN

IP_PWP:d1245750\SS4528altspan1(LRFD).dgn

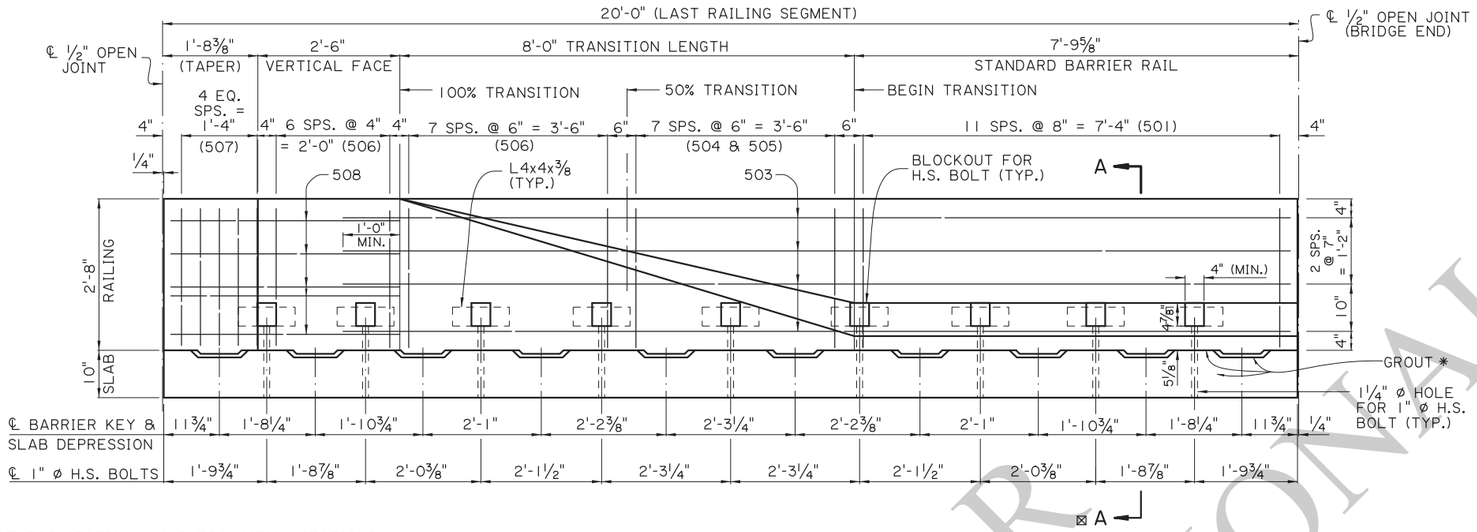

⊠ FOR SECTION A-A & TRANSITION SECTIONS SEE ALTERNATE SPAN (3 OF4)

PRECAST BARRIER RAILING TRANSITION ELEVATION

(SHOWING BARRIER RAILING AT END OF BRIDGE)
SCALE: ¾" = 1'-0"

* PLACE OR INJECT NON-SHRINK GROUT AS REQUIRED IN BETWEEN SLAB DEPRESSIONS TO FILL ALL VOIDS AND GAPS FOR FULL EVEN BEARING OF THE BARRIER ON THE SLAB. SEE NOTE 3, SHEET 9 OF 11.

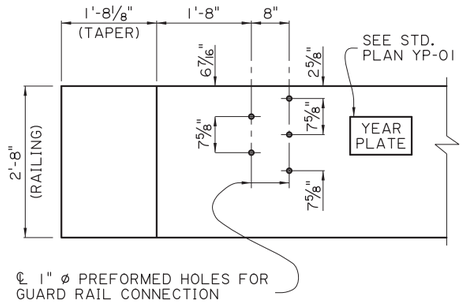

GUARD RAIL CONNECTION DETAIL

CONFORM TO GUARD RAIL STANDARD PLANS
SCALE: ¾" = 1'-0"

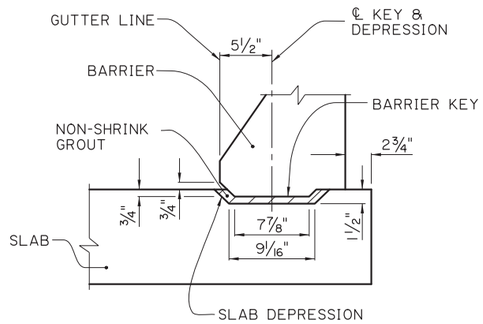

ELEVATION

SCALE: 1½" = 1'-0"

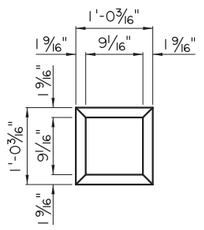

PLAN-DEPRESSION

SCALE: 1" = 1'-0"

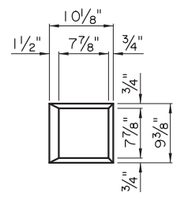

PLAN-KEY

SCALE: 1" = 1'-0"

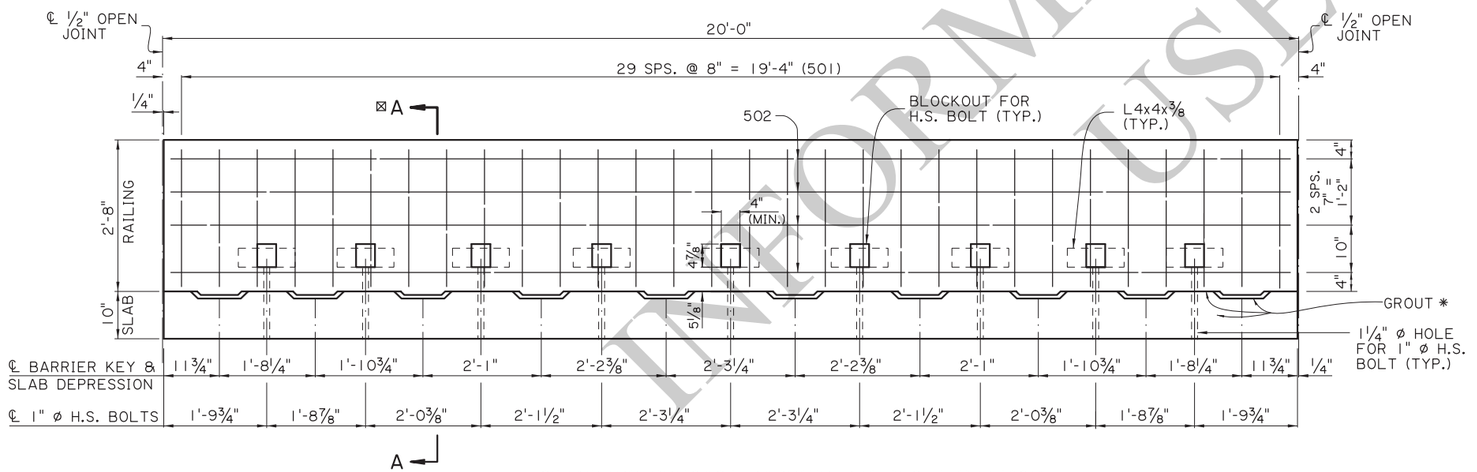

STANDARD PRECAST BARRIER RAILING ELEVATION

(SHOWING BARRIER RAILING ALONG BRIDGE SLAB)
SCALE: ¾" = 1'-0"

BARRIER KEY AND PANEL DEPRESSION DETAILS

FOR INFORMATIONAL USE

SHEET NUMBER

PARISH | CONTROL SECTION | STATE PROJECT

DESIGN B. DELATTE | CHECK J. NAKHLEH | DETAIL D. HYMEL | CHECK J. NAKHLEH | REVIEW | SERIES # 10 OF 13

APPROVED BY CHIEF ENGINEER:

DATE: 12/10/2025

NO.	DATE	REVISION OR CHANGE ORDER DESCRIPTION	BY

STATE OF LOUISIANA

ALTERNATE SPAN (2 OF 4)
20'-0" PRECAST CONC. BARRIER

28'-0" CLEAR ROADWAY
45° CROSSING TWO WAY TANGENT

PSS-45-28-20SL

DOTD
LOUISIANA DEPARTMENT OF TRANSPORTATION & DEVELOPMENT

STANDARD PLAN

11/21/2025 08:2

IP_PWP:d1245750\SS4528altspan2(LRFD).dgn

11/21/2025 08:2

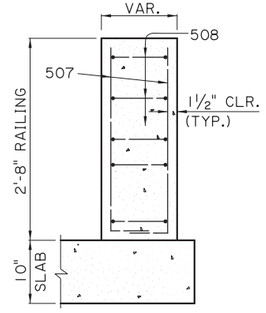

TAPER

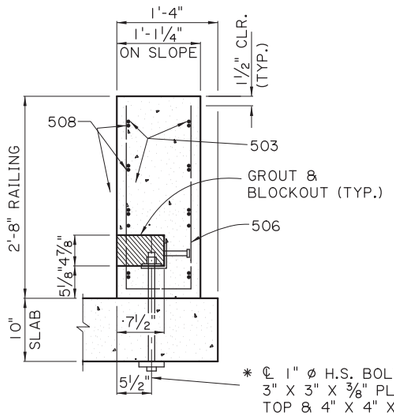

100% TRANSITION

* ℄ 1" ø H.S. BOLT, AND 3" X 3" X ⅜" PLATE WASHER TOP & 4" X 4" X ⅞" PLATE WASHER BOTTOM, AND ONE HEAVY HEX NUT (TYP.).

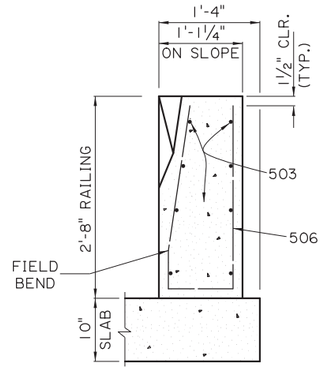

50% TRANSITION

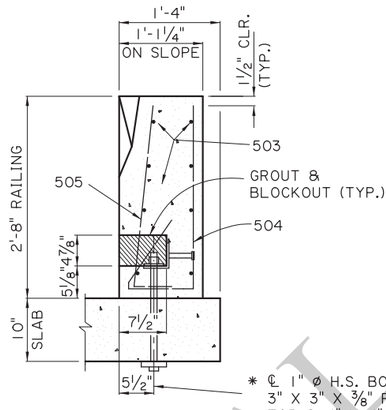

50% TRANSITION

* ℄ 1" ø H.S. BOLT, AND 3" X 3" X ⅜" PLATE WASHER TOP & 4" X 4" X ⅞" PLATE WASHER BOTTOM, AND ONE HEAVY HEX NUT (TYP.).

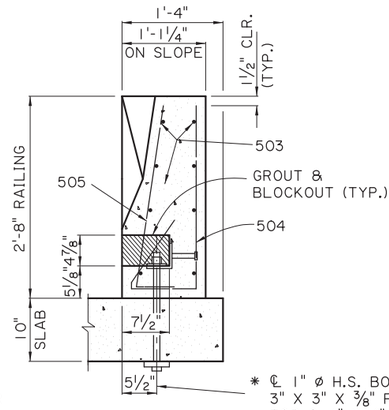

BEGIN TRANSITION

* ℄ 1" ø H.S. BOLT, AND 3" X 3" X ⅜" PLATE WASHER TOP & 4" X 4" X ⅞" PLATE WASHER BOTTOM, AND ONE HEAVY HEX NUT (TYP.).

BARRIER RAILING TRANSITION SECTIONS

SCALE: 1" = 1'-0"

* 1" ø THREADED STUD OF EQUAL STRENGTH, WITH 2 NUTS & 2 WASHERS, MAY BE USED IN LIEU OF H.S. BOLTS.

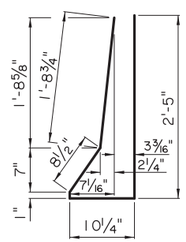

501
(2½" ø PIN)

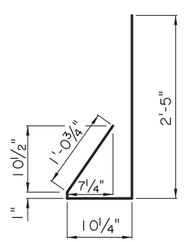

504
(2½" ø PIN)

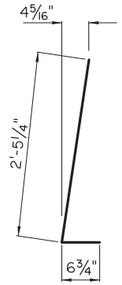

505
(2½" ø PIN)

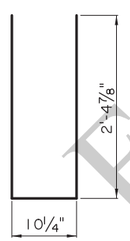

506
(2½" ø PIN)

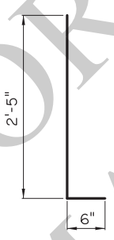

507
(2½" ø PIN)

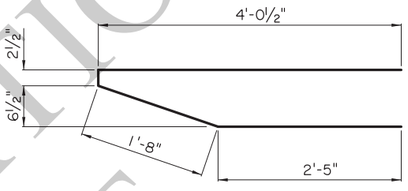

508
(2½" ø PIN)

NOTES:

1) ALL BARRIER RAIL SURFACES ARE TO RECEIVE A CLASS 3 SPECIAL FINISH.

2) ALL SURFACES OF THE BLOCKOUTS EXCEPT THE BOTTOM MAY BE TAPERED AND ALL CORNERS MAY BE ROUNDED TO A RADIUS TO ALLOW FOR EASY REMOVAL OF PLUGS OR FORMS. AFTER PLACING AND TIGHTENING THE ANCHOR BOLTS, THE BLOCKOUTS SHALL BE FILLED WITH AN APPROVED NON-SHRINK GROUT FROM AML AND TROWELED TO THE REQUIRED FINISH AND TO THE SATISFACTION OF THE ENGINEER.

3) AFTER BARRIER IS PLACED AND ALIGNED, ALL GAPS UNDER BARRIER AND TOP OF SLAB SHALL BE FILLED WITH NON-SHRINK GROUT FROM AML AND ALLOWED TO SET PRIOR TO TIGHTENING OF BOLTS. IT IS IMPORTANT TO FILL ALL VOIDS AND GAPS UNDER THE BARRIER TO ENSURE EVEN BEARING ON DECK WHEN THE ANCHOR BOLTS ARE LOADED.

4) ALL 1" ø BOLTS SHALL BE HIGH STRENGTH A325 OR APPROVED EQUAL. BOLT, NUT & WASHER TO BE GALVANIZED AS PER ASTM A-153. BOLTS SHALL BE TENSIONED TO 36 KIPS, OR APPROXIMATELY 540 FOOT-LB. OF TORQUE (LUBRICATED CONNECTION).

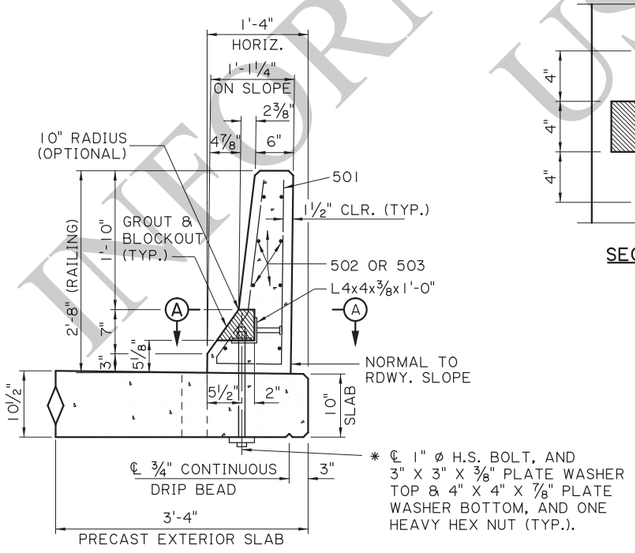

SECTION A-A

SCALE: 1" = 1'-0"

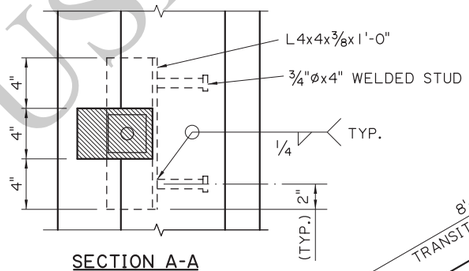

SECTION A-A

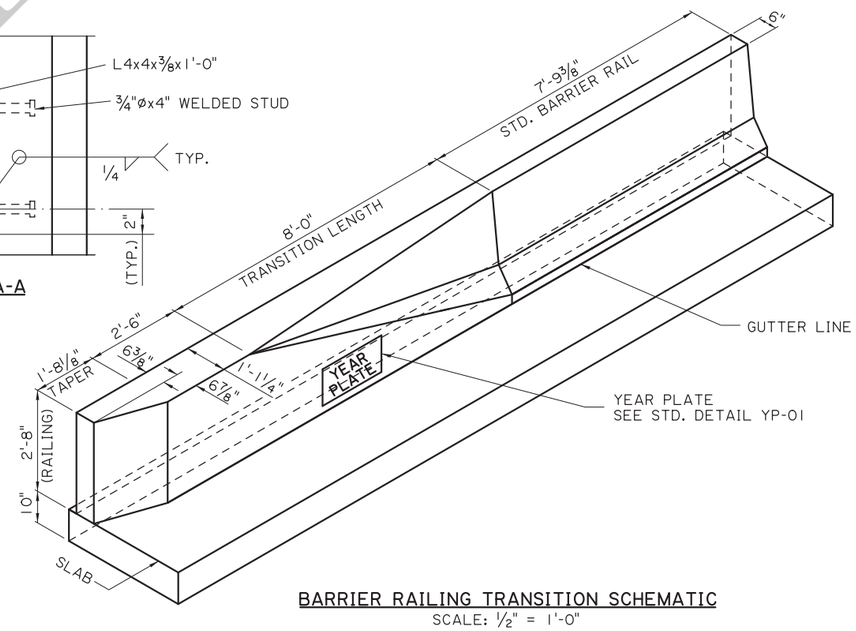

BARRIER RAILING TRANSITION SCHEMATIC

SCALE: ½" = 1'-0"

FOR INFORMATIONAL USE

SHEET NUMBER

PARISH | CONTROL SECTION | STATE PROJECT

DESIGN B. DELATTE | CHECK J. NAKHLEH | DETAIL D. HYMEL | CHECK J. NAKHLEH | REVIEW | SERIES # 11 OF 13

APPROVED BY CHIEF ENGINEER: DATE: 12/10/2025

REVISION OR CHANGE ORDER DESCRIPTION | BY | NO. | DATE

ALTERNATE SPAN (3 OF 4)
20'-0" PRECAST CONC. BARRIER
28'-0" CLEAR ROADWAY
45° CROSSING TWO WAY TANGENT

PSS-45-28-20SL

DOTD LOUISIANA DEPARTMENT OF TRANSPORTATION & DEVELOPMENT

STANDARD PLAN

IP_PWP:d1245750\SS4528altspan3(LRFD).dgn

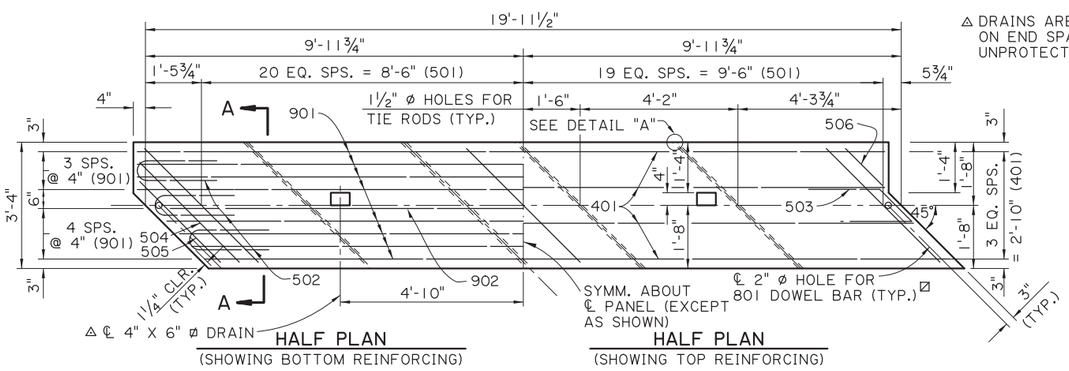

HALF PLAN (SHOWING BOTTOM REINFORCING)

HALF PLAN (SHOWING TOP REINFORCING)

EXTERIOR UNIT

SCALE ½" = 1'-0"

△ DRAINS ARE NOT REQUIRED ON END SPANS OVER UNPROTECTED SLOPES.

⊠ HOLES ARE OPTIONAL AT EXPANSION ENDS.

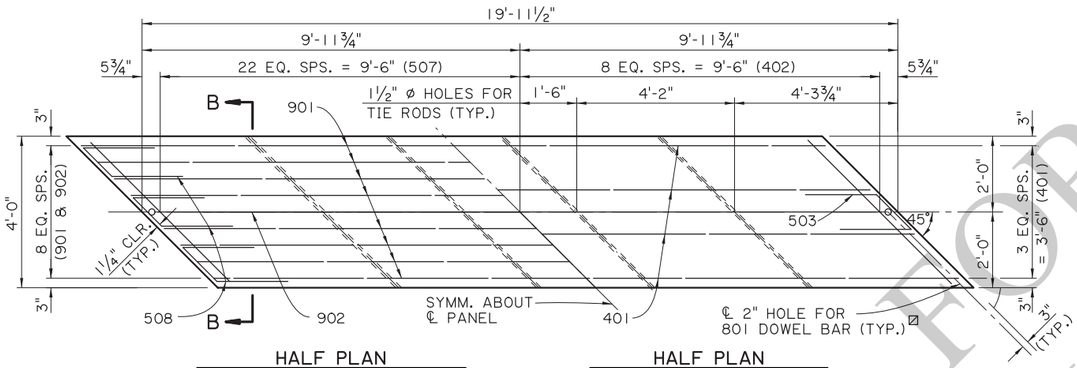

HALF PLAN (SHOWING BOTTOM REINFORCING)

HALF PLAN (SHOWING TOP REINFORCING)

INTERIOR UNIT

SCALE ½" = 1'-0"

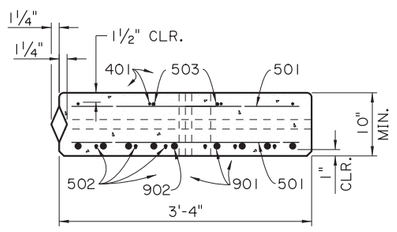

SECTION A-A

EXTERIOR UNIT
SCALE 1" = 1'-0"

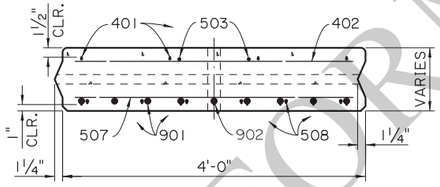

SECTION B-B

INTERIOR UNIT
SCALE 1" = 1'-0"

NOTE:
FOR EACH SPAN. ONE EXTERIOR UNIT WILL HAVE A TONGUE AND ONE WILL HAVE A GROOVE.

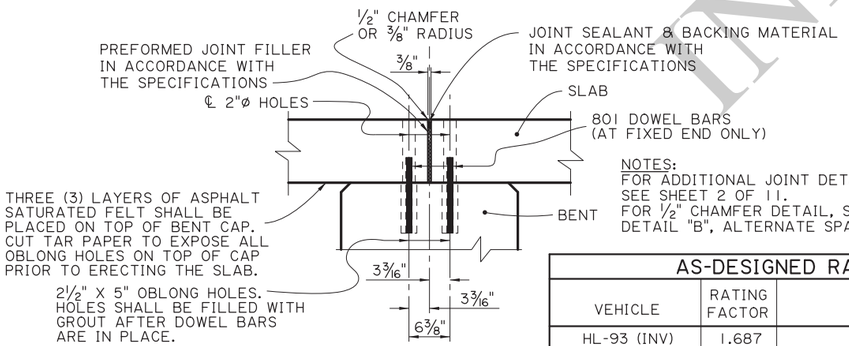

TYPICAL JOINT DETAIL

SCALE : 1" = 1'-0"

NOTES:
FOR ADDITIONAL JOINT DETAILS SEE SHEET 2 OF 11.
FOR ½" CHAMFER DETAIL, SEE DETAIL "B", ALTERNATE SPAN 1 OF 4.

AS-DESIGNED RATING		
VEHICLE	RATING FACTOR	NOTES
HL-93 (INV)	1.687	——
HL-93 (OPR)	2.187	——
LADV-11 (INV)	1.298	MAGNIFICATION FACTOR = 1.3

ALTERNATE SPAN NOTES:

DESIGN SPECIFICATIONS : AASHTO LRFD BRIDGE DESIGN SPECIFICATIONS, WITH 2008 & 2009 INTERIMS.

DESIGN LOAD : THE BRIDGE DECK IS DESIGNED FOR A FUTURE WEARING COURSE OF 19 PSF. THE LIVE LOAD IS HL-93, AND LADV-11 (LOUISIANA DESIGN VEHICLE LIVE LOAD 2011).

STRUCTURAL CONCRETE: ALL CONCRETE SHALL BE CLASS P1. THE BRIDGE RAIL CONCRETE SHALL BE CLASS A1 IF RAIL IS CAST IN PLACE. STEEL SIDE FORMS AND STEEL OR CONCRETE BOTTOM FORMS SHALL BE USED FOR PRECAST COMPONENTS. EXPOSED EDGES SHALL HAVE A ¾" CHAMFER, UNLESS SPECIFIED OTHERWISE. ALL SURFACES SHALL RECEIVE A CLASS 1 ORDINARY SURFACE FINISH UPON REMOVAL OF THE FORMS. THE FINAL FINISH SHALL BE A TINE FINISH IN ACCORDANCE WITH THE SPECIFICATIONS.

REINFORCING STEEL: ALL REINFORCING STEEL SHALL BE GRADE 60. DIMENSIONS RELATING TO FABRICATION ARE OUT TO OUT OF BARS, UNLESS SPECIFIED OTHERWISE. DIMENSIONS RELATING TO SPACING ARE TO BAR CENTERS, UNLESS SPECIFIED OTHERWISE. ALL REINFORCING BARS SHALL BE PLACED TO PROVIDE A MINIMUMUM COVER OF 1" FROM THE DRAIN HOLES. REINFORCING STEEL MAY BE TACK WELDED FOR A DISTANCE OF NOT MORE THAN 4'-0" FROM EACH END OF UNIT. NO OTHER WELDING SHALL BE PERMITTED.

MISCELLANEOUS STEEL: HIGH STRENGTH BOLTS SHALL CONFORM TO ASTM DESIGNATION A-325. PRESTRESSING STRANDS SHALL CONFORM TO ASTM DESIGNATION A-416, GRADE 270. PLATES, TIE RODS, AND DRIFT BOLTS SHALL CONFORM TO ASTM DESIGNATION A709, GRADE 36. STEEL SPECIFIED TO BE ZINC COATED SHALL BE IN CONFORMANCE WITH ASTM DESIGNATION A-123.

GROUT: THE GROUT SHALL BE AN APPROVED FLOWABLE NON-SHRINK GROUT LISTED ON AML. THE GROUT SHALL BE TESTED FOR ACCEPTANCE PRIOR TO USAGE. THE GROUT SHALL ATTAIN A MINIMUM COMPRESSIVE STRENGTH OF 3500 PSI PRIOR TO LOADING SLABS. SURFACES SHALL BE THOROUGHLY SATURATED WITH WATER BY FLOODING THE HOLES FOR APPROXIMATELY FIVE (5) MINUTES IMMEDIATELY BEFORE THE GROUT IS PLACED. ONLY POTABLE WATER SHALL BE USED FOR SATURATION AND MIXING PURPOSES.

PATCHING MATERIAL: THE PATCHING MATERIAL SHALL BE AN APPROVED PATCHING MATERIAL FOR PRECAST OR PRESTREESED CONCRETE PRODUCTS LISTED ON AML. SURFACE PREPARATION, MIXING AND PLACEMENT SHALL BE IN ACCORDANCE WITH THE MANUFACTURERS' RECOMMENDATIONS. ONLY POTABLE WATER SHALL BE USED FOR SATURATION AND MIXING PURPOSES.

PRECAST UNITS: THE PLANS FOR AN ONGOING OPERATION OF FABRICATION FACILITIES SHALL BE APPROVED BY THE DEPARTMENT. EACH UNIT SHALL HAVE "LIVE LOAD HL-93 AND LADV-11", THE FABRICATOR'S MARK, AND UNIQUE NUMBER, MEETING THE APPROVAL OF THE ENGINEER STAMPED OR INSCRIBED IN THE PLASTIC CONCRETE. PRECAST UNITS MAY BE CAST WITH OR WITHOUT CAMBER. IF CAMBER IS PROVIDED IT SHALL NOT EXCEED ¼" AT THE CENTERLINE OF SPAN. ALL UNITS SHALL BE HELD AT THE PLANT FOR A MINIMUM OF TEN(10) DAYS AFTER CASTING. THE CONCRETE SHALL REACH A MINIMUM STRENGTH OF 3,000 PSI BEFORE HANDLING IS PERMITTED. THE LIFTING INSERTS SHALL BE 1", TYPE S INSERTS AS MANUFACTURED BY DAYTON-SUPERIOR CORPORATION OR AN APPROVED EQUAL. EACH INSERT SHALL HAVE A MINIMUM LOAD CAPACITY OF 10,000 POUNDS . FOUR(4) INSERTS WITH 1" ø X 5" LONG COIL BOLTS SHALL BE PLACED IN THE TOP OF THE UNIT AND LOCATED 1'-3" FROM ITS ENDS AND 1'-0" FROM ITS EDGES. INSERT HOLES SHALL BE GROUT FILLED AFTER PLACEMENT OF UNIT. AT THE CONTRACTOR'S OPTION A SLING OF SUFFICIENT CAPACITY MAY BE USED FOR LIFTING, PROVIDED THE SAME PICKUP LOCATION FROM THE ENDS ARE USED. FABRICATION TOLERANCES SHALL BE AS FOLLOWS:

UNIT DEPTH	± 3⁄16"
UNIT LENGTH	+ ⅛" AND -½"
OVERALL SPAN WIDTH	± 2"

ALL PRECAST UNITS IN EACH BRIDGE SPAN SHALL BE MATCH CAST IN THE SAME CASTING BED TO ENSURE A PROPER FIT DURING INSTALLATION.

GUARDRAIL: CONFORM TO PROJECT PLANS AND GUARD RAIL STANDARD PLANS.

PAYMENT: ALL WORK WILL BE PAID FOR UNDER THE DESIGNATED BRIDGE SUPERSTRUCTURE AND SUBSTRUCTURE PAY ITEM AND IN ACCORDANCE WITH THE SPECIFICATIONS.

ESTIMATED QUANTITIES (ONE EXTERIOR UNIT)				
BAR	NO.	UNIT LENGTH	TOTAL LENGTH	LOCATION
901	8	19'-7"	156'-8"	LONGIT. BOT. OF SLAB
902	1	18'-11"	18'-11"	LONGIT. BOT. OF SLAB
TOTAL NO. 9 BARS = 175'-7" = 597 LBS.				
801	1	1'-0"	1'-0"	DOWELS
TOTAL NO. 8 BARS = 1'-0" = 3 LBS.				
501	80	4'-2"	333'-4"	TRANS. TOP & BOT. OF SLAB
502	6	4'-6"	27'-0"	TOP & BOT. END OF SLAB
503	2	4'-9"	9'-6"	TOP & BOT. END OF SLAB
504	2	3'-9"	7'-6"	TOP & BOT. END OF SLAB
505	2	3'-0"	6'-0"	TOP & BOT. END OF SLAB
506	2	1'-4"	2'-8"	TOP & BOT. END OF SLAB
TOTAL NO. 5 BARS = 386'-0" = 403 LBS.				
401	4	19'-7"	78'-4"	LONGIT. TOP OF SLAB
TOTAL NO. 4 BARS = 78'-4" = 52 LBS.				
DEFORMED REINFORCING STEEL = 1055 LBS.				
⊙ CLASS P1 CONCRETE = 2.05 CU. YDS.				
CONCRETE RAILING (PER SPAN) = 40.00 LIN. FT.				

ESTIMATED QUANTITIES (ONE INTERIOR UNIT)				
BAR	NO.	UNIT LENGTH	TOTAL LENGTH	LOCATION
901	8	19'-7"	156'-8"	LONGIT. BOT. OF SLAB
902	1	18'-11"	18'-11"	LONGIT. BOT. OF SLAB
TOTAL NO. 9 BARS = 175'-7" = 597 LBS.				
801	1	1'-0"	1'-0"	DOWELS
TOTAL NO. 8 BARS = 1'-0" = 3 LBS.				
503	2	4'-9"	9'-6"	TOP END OF SLAB
507	45	5'-2"	232'-6"	TRANS. BOT. OF SLAB
508	6	4'-7"	27'-6"	BOT. END OF SLAB
TOTAL NO. 5 BARS = 269'-6" = 282 LBS.				
401	4	19'-7"	78'-4"	LONGIT. TOP OF SLAB
402	17	4'-2"	70'-10"	TRANS. TOP OF SLAB
TOTAL NO. 4 BARS = 149'-2" = 100 LBS.				
DEFORMED REINFORCING STEEL = 982 LBS.				
⊙ CLASS P1 CONCRETE = 2.46 CU. YDS.				

⊙ BASED ON A 10" SLAB THICKNESS

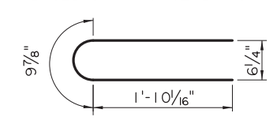

502
5 " ø PIN

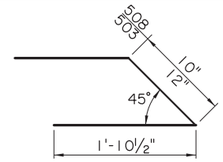

503 & 508
2½" ø PIN

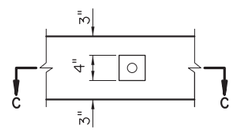

END VIEW

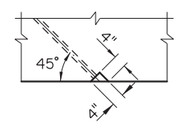

SECTION C-C

DETAIL "A"
TYP. EXTERIOUR EDGE ONLY
SCALE 1" = 1'-0"

FOR INFORMATION ONLY

SHEET NUMBER

PARISH | CONTROL SECTION | STATE PROJECT

DESIGN J. NAKHLEH | DETAIL D. HYMEL | REVIEW J. NAKHLEH | SERIES # 12 OF 13
CHECK B. DELATTE | CHECK J. NAKHLEH

APPROVED BY CHIEF ENGINEER: DATE: 12/10/2025

NO. | DATE | REVISION OR CHANGE ORDER DESCRIPTION | BY

STATE OF LOUISIANA DEPARTMENT OF TRANSPORTATION AND DEVELOPMENT

ALTERNATE SPAN (4 OF 4)
20'-0" PRECAST CONC. SLAB UNIT

28'-0" CLEAR ROADWAY
45° CROSSING TWO WAY TANGENT

PSS-45-28-20SL

DOTD LOUISIANA DEPARTMENT OF TRANSPORTATION & DEVELOPMENT

STANDARD PLAN

11/25/2025 08:11:
IP_PWP:d1245750\SS4528altspan4(JRFD).dgn

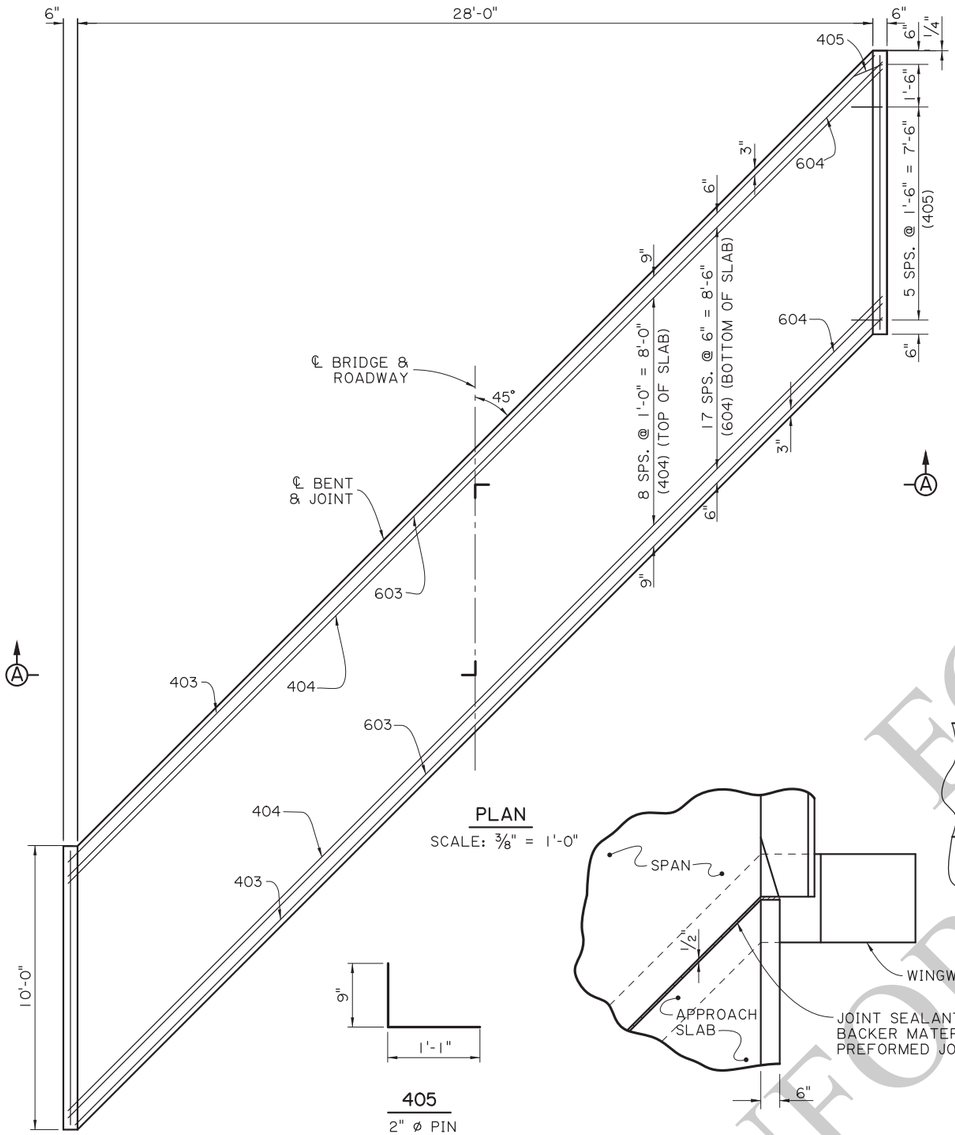

PLAN

SCALE: 3/8" = 1'-0"

405

2" ø PIN

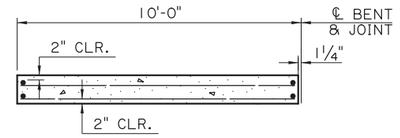

(FOR PORTLAND CEMENT CONCRETE ROADWAY PAVEMENT)

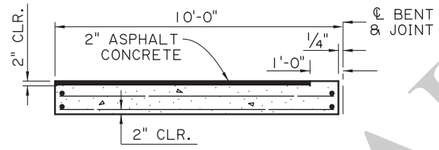

(FOR ASPHALT CONCRETE ROADWAY PAVEMENT)

SECTION ALONG ℄ ROADWAY

SCALE : ¼" = 1'-0"

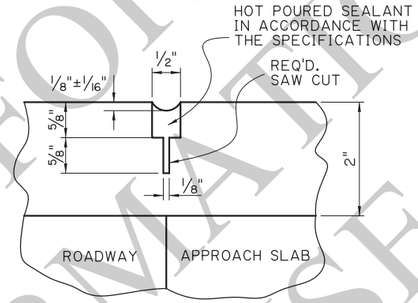

SAWING & SEALING JOINT DETAIL

N.T.S.

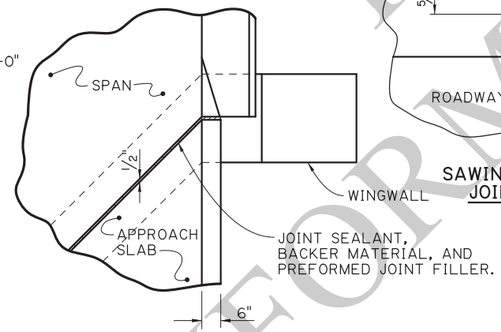

JOINT DETAIL

N.T.S.

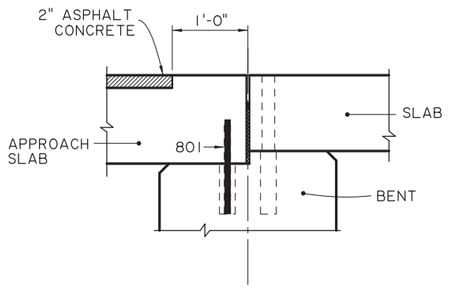

DETAIL A

SCALE : 1" = 1'-0"

(ASPHALT CONCRETE PAVEMENT OPTION)

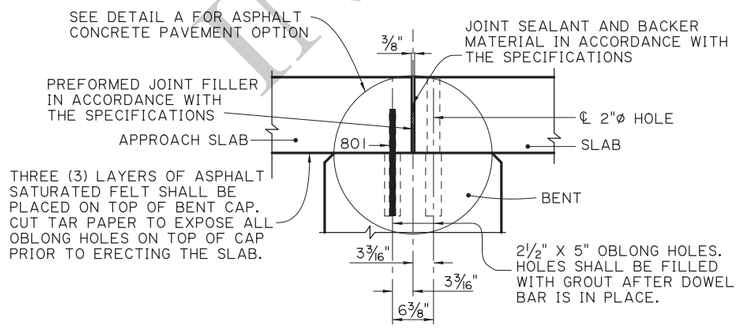

TYPICAL JOINT DETAIL

SCALE : 1" = 1'-0"

ESTIMATED QUANTITIES (ONE SLAB)				
BAR	NO.	UNIT LENGTH	TOTAL LENGTH	LOCATION
801	8	1'-0"	8'-0"	DOWELS
TOTAL NO. 8 BARS = 8'-0" = 21 LBS.				
601	2	9'-7"	19'-2"	LONGIT. BOT. OF SLAB
602	56	9'-6"	532'-0"	LONGIT. BOT. OF SLAB
603	2	40'-1"	80'-2"	TRANSV. BOT. OF SLAB
604	18	40'-6"	729'-0"	TRANSV. BOT. OF SLAB
TOTAL NO. 6 BARS = 1,360'-4" = 2,043 LBS.				
401	4	9'-7"	38'-4"	LONGIT. TOP OF SLAB & CURB
402	28	9'-6"	266'-0"	LONGIT. TOP OF SLAB
✱ 403	2	41'-9"	83'-6"	TRANSV. TOP OF SLAB
✱ 404	9	42'-2"	379'-6"	TRANSV. TOP OF SLAB
405	14	1'-10"	25'-8"	DOWELS IN CURB
TOTAL NO. 4 BARS = 793'-0" = 530 LBS.				
⊙ TOTAL DEFORMED REINFORCING STEEL = 2,594 LBS.				
CONCRETE APPROACH SLAB = 32.22 SQ. YDS.				
⊙⊠ ASPHALT CONCRETE = 3.0 TONS				
⊙⊠ SAW CUT & SEAL = 38 LIN. FT.				

⊙ TO BE PAID FOR UNDER ITEM CONCRETE APPROACH SLABS.

✱ INCLUDES ONE (1) 1'-8" MINIMUM LAP SPLICE. ALL LAP SPLICES ARE TO BE STAGGERED.

⊠ REQUIRED WHEN APPROACH SLAB IS ADJACENT TO ASPHALT CONCRETE PAVEMENT.

APPROACH SLAB NOTES:

DESIGN SPECIFICATIONS: AASHTO LRFD BRIDGE DESIGN SPECIFICATIONS, 4th EDITION, WITH 2008 & 2009 INTERIMS.

STRUCTURAL CONCRETE: ALL CONCRETE SHALL BE CLASS A1. EXPOSED EDGES SHALL HAVE A ¾" CHAMFER, UNLESS SPECIFIED OTHERWISE.

REINFORCING STEEL: ALL REINFORCING STEEL SHALL BE GRADE 60. DIMENSIONS RELATING TO THE FABRICATION ARE OUT-TO-OUT OF BARS, UNLESS SPECIFIED OTHERWISE. DIMENSIONS RELATING TO SPACING ARE TO BAR CENTERS, UNLESS SPECIFED OTHERWISE.

BEDDING MATERIAL: FOR DETAILS OF BEDDING MATERIAL AND UNDERDRAINS SEE APPROACH SLAB STANDARD DETAILS.

SAWING & SEALING: THE ASPHALT CONCRETE SHALL BE SAW CUT AT THE END OF THE CONCRETE APPROACH SLAB THE ENTIRE ROADWAY WIDTH AND SEALED WHICH WILL BE PAID FOR UNDER THE DESIGNATED ROADWAY PAY ITEM.

PAYMENT: ALL OTHER WORK WILL BE PAID FOR UNDER THE DESIGNATED BRIDGE CONCRETE APPROACH SLAB PAY ITEM AND IN ACCORDANCE WITH THE SPECIFICATIONS.

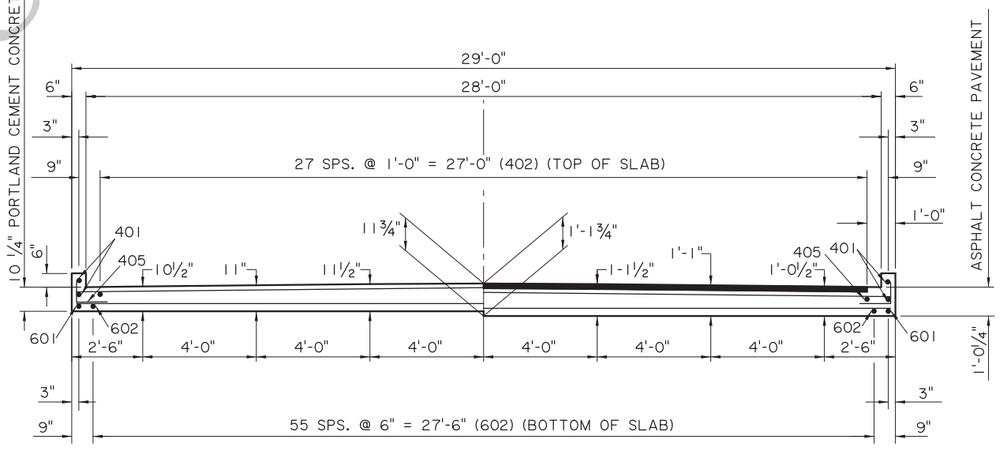

(HALF SECTION) (PORTLAND CEMENT CONCRETE)

(HALF SECTION) (ASPHALT CONCRETE PAVEMENT)

SECTION A-A

SCALE 3/8" = 1'-0"

FOR INFORMATIONAL USE

SHEET NUMBER

PARISH | CONTROL SECTION | STATE PROJECT

DESIGN B. DELATTE | CHECK J. NAKHLEH | DETAIL D. HYMEL | CHECK J. NAKHLEH | REVIEW | SERIES # 13 OF 13

APPROVED BY CHIEF ENGINEER: DATE: 12/10/2025

NO. | DATE | REVISION OR CHANGE ORDER DESCRIPTION | BY

STATE OF LOUISIANA

ALTERNATE APPROACH SLAB
10'-0" CAST-IN-PLACE

28'-0" CLEAR ROADWAY
45° CROSSING TWO WAY TANGENT

PSS-45-28-20SL

DOTD LOUISIANA DEPARTMENT OF TRANSPORTATION & DEVELOPMENT

STANDARD PLAN

11/25/2025 11:4

IP_PWP:d1245750\SS4528altaprslab(LRFD).dgn

11/25/2025 08:3:

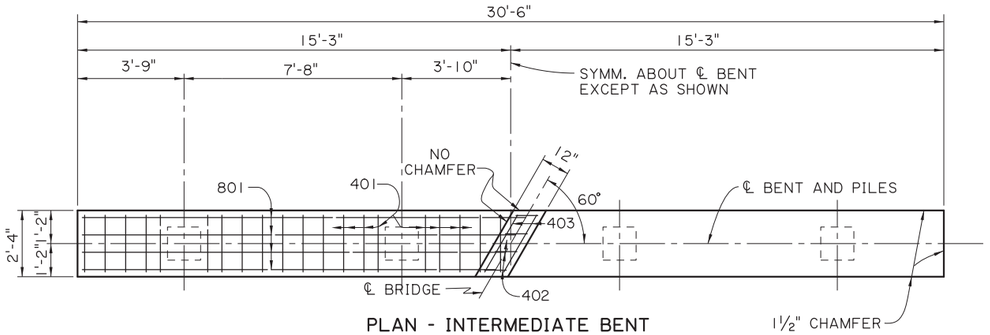

PLAN - INTERMEDIATE BENT

SCALE ⅜" = 1'-0"

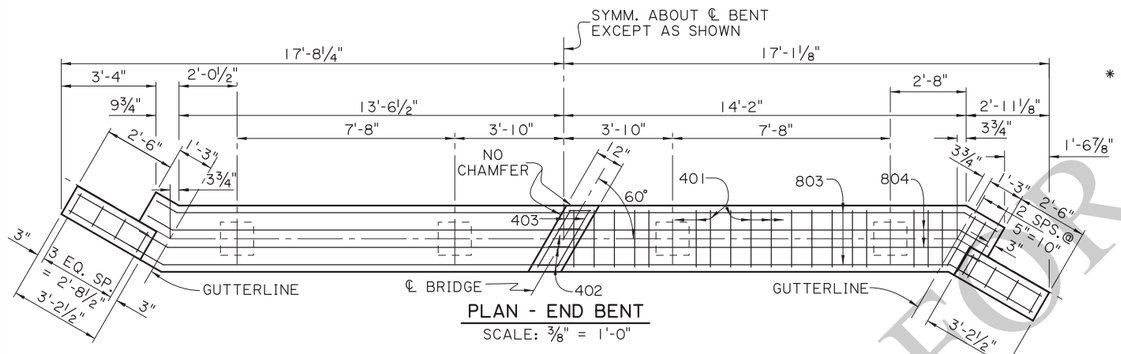

PLAN - END BENT

SCALE: ⅜" = 1'-0"

ESTIMATED QUANTITIES (ONE INTER. BENT)

BAR	NO.	UNIT LENGTH	TOTAL LENGTH	LOCATION
801	6	30'-2"	181'-0"	LONGIT. IN CAP
802	6	8'-6"	51'-0"	LONGIT. IN CAP
TOTAL NO. 8 BARS = 232'-0" = 619 LBS.				
601	19	2'-0"	38'-0"	DOWELS
TOTAL NO. 6 BARS = 38'-0" = 57 LBS.				
501	2	30'-2"	60'-4"	LONGIT. IN CAP
TOTAL NO. 5 BARS = 60'-4" = 63 LBS.				
401	40	8'-2"	326'-8"	STIRRUPS IN CAP
402	4	3'-5"	13'-8"	STIRRUPS IN RISER
403	2	2'-3"	4'-6"	LONGIT. IN RISER
TOTAL NO. 4 BARS = 344'-10" = 230 LBS.				
* TOTAL DEFORMED REINFORCING STEEL = 969 LBS.				
⊖ CLASS A1 CONCRETE = 5.11 CU. YDS.				
MAX. PILE LOAD: SERVICE DEAD LOAD = 21 TONS				
SERVICE LIVE LOAD = 34 TONS				
FACTORED TOTAL LOAD = 75 TONS				

* ADD 57 LBS. OF REINFORCING STEEL (19-601 DOWELS) WHEN TWO FIXED ENDS OCCUR ON THE SAME BENT.

ESTIMATED QUANTITIES (ONE END BENT)

BAR	NO.	UNIT LENGTH	TOTAL LENGTH	LOCATION
802	6	8'-6"	51'-0"	LONGIT. IN CAP
803	4	29'-9"	119'-0"	LONGIT. IN CAP
804	2	29'-10"	59'-8"	LONGIT. IN CAP
TOTAL NO. 8 BARS = 229'-8" = 613 LBS.				
601	19	2'-0"	38'-0"	DOWELS
TOTAL NO. 6 BARS = 38'-0" = 57 LBS.				
502	2	29'-9"	59'-6"	LONGIT. IN CAP
TOTAL NO. 5 BARS = 59'-6" = 62 LBS.				
401	42	8'-2"	343'-0"	STIRRUPS IN CAP
402	4	3'-5"	13'-8"	STIRRUPS IN RISER
403	2	2'-3"	4'-6"	LONGIT. IN RISER
404	8	8'-9"	70'-0"	STIRRUPS IN WINGWALL
405	8	2'-10"	22'-8"	LONGIT. IN WINGWALL
406	12	4'-0"	48'-0"	LONGIT. IN WINGWALL
TOTAL NO. 4 BARS = 501'-10" = 335 LBS.				
TOTAL DEFORMED REINFORCING STEEL= 1,067 LBS.				
⊖ CLASS A1 CONCRETE = 5.88 CU. YDS.				
MAX. PILE LOAD: SERVICE DEAD LOAD = 21 TONS				
SERVICE LIVE LOAD = 34 TONS				
FACTORED TOTAL LOAD = 75 TONS				

⊖ 16" ø PPC PILES USED FOR ESTIMATING PURPOSES ONLY. (ADD 0.05 CU. YDS. OF CLASS A1 CONCRETE PER BENT WHEN 14" ø PPC PILES ARE USED.)

AS-DESIGNED RATING

VEHICLE	RATING FACTOR	NOTES
HL-93 (INV)	1.565	———
HL-93 (OPR)	2.028	———
LADV-11 (INV)	1.204	MAGNIFICATION FACTOR = 1.3

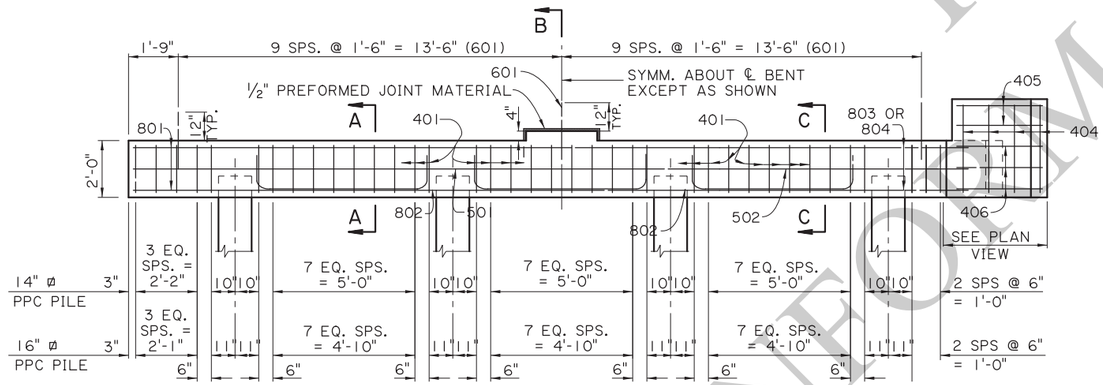

HALF ELEVATION - INTERMEDIATE BENT

SCALE ⅜" = 1'-0"

HALF ELEVATION - END BENT

SCALE ⅜" = 1'-0"

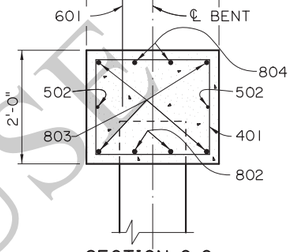

SECTION C-C

SCALE: ¾" = 1'-0"

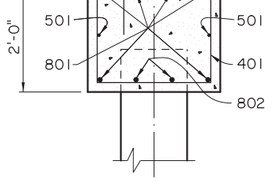

SECTION A-A

SCALE: ¾" = 1'-0"

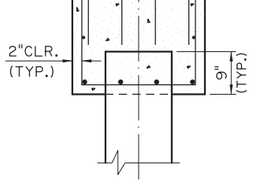

SECTION B-B

SCALE: ¾" = 1'-0"

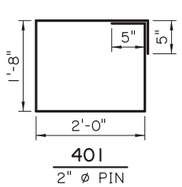

401
2" ø PIN

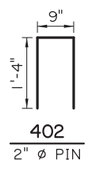

402
2" ø PIN

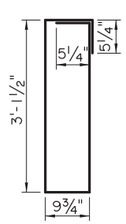

404
2" ø PIN

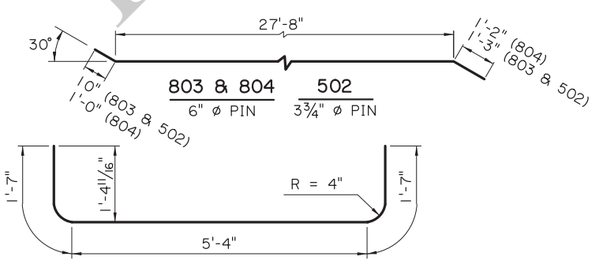

802
6" ø PIN

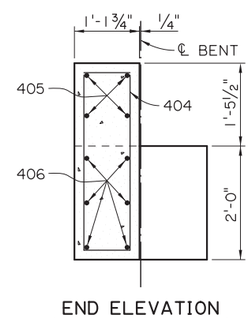

END ELEVATION

SCALE ¾" = 1'-0"

NOTES:

DESIGN SPECIFICATIONS: AASHTO LRFD BRIDGE DESIGN SPECIFICATIONS, 4th EDITION, WITH 2008 & 2009 INTERIMS.

DESIGN LOAD: LIVE LOAD IS HL-93, AND LADV-11 (LOUISIANA DESIGN VEHICLE LIVE LOAD 2011).

STRUCTURAL CONCRETE: ALL CONCRETE SHALL BE CLASS A1. EXPOSED EDGES SHALL HAVE A ¾" CHAMFER UNLESS SPECIFIED OTHERWISE. ALL EXPOSED FACES OF WINGWALLS AND ENDS OF CAPS SHALL RECEIVE A SURFACE FINISH AS PER THE SPECIFICATIONS UNLESS SPECIFIED OTHERWISE.

REINFORCING STEEL: ALL REINFORCING SHALL BE GRADE 60. DIMENSIONS RELATING TO FABRICATION ARE OUT TO OUT OF BARS, UNLESS SPECIFIED OTHERWISE. DIMENSIONS RELATING TO SPACING ARE TO BAR CENTERS, UNLESS SPECIFIED OTHERWISE. DOWELS (601 BARS) SHALL BE PROVIDED AT ALL FIXED BEARINGS AND APPROACH SLAB BEARINGS. ALL EXPOSED ENDS OF DOWELS SHALL BE WRAPPED WITH TWO LAYERS OF 15 LB. ASPHAL SATURATED FELT. CLOSE FITTING TUBES OF COMPRESSIBLE MATERIAL NOT LESS THAN 3/16" THICK MAY BE SUBSTITUTED.

PRECAST CONCRETE PILES: CONFORM TO PILE STANDARD PLAN AND PROJECT PLANS FOR FABRICATION AND INSTALLATION. PILES WILL BE PAID FOR UNDER THE DESIGNATED PILE PAY ITEMS.

PREFORMED JOINT MATERIAL: PREFORMED JOINT MATERIAL SHALL BE IN ACCORDANCE WITH THE SPECIFICATIONS.

PAYMENT: ALL OTHER WORK WILL BE PAID FOR UNDER THE DESIGNATED BRIDGE SUPERSTRUCTURE AND SUBSTRUCTURE PAY ITEM AND IN ACCORDANCE WITH THE SPECIFICATIONS.

FOR INFORMATIONAL USE

SHEET NUMBER

PARISH | CONTROL SECTION | STATE PROJECT

DESIGN B. DELATTE | CHECK J. NAKHLEH | DETAIL D. HYMEL | CHECK J. NAKHLEH | REVIEW | SERIES # 1 OF 11

APPROVED BY CHIEF ENGINEER: DATE: 12/10/2025

NO.	DATE	REVISION OR CHANGE ORDER DESCRIPTION	BY

STATE OF LOUISIANA DEPARTMENT OF TRANSPORTATION AND DEVELOPMENT

BENTS REINFORCED CONCRETE PILE BENTS

24'-0" CLEAR ROADWAY
60° CROSSING TWO WAY TANGENT

PSS-60-24-20SL

DOTD LOUISIANA DEPARTMENT OF TRANSPORTATION & DEVELOPMENT

STANDARD PLAN

IP_PWP:d1246415\SS6024bent(LRFD).dgn

CHECK PRINTS
11/25/2025 08:4
IP_PWP:d1246415\SS6024span1(LRFD).dgn

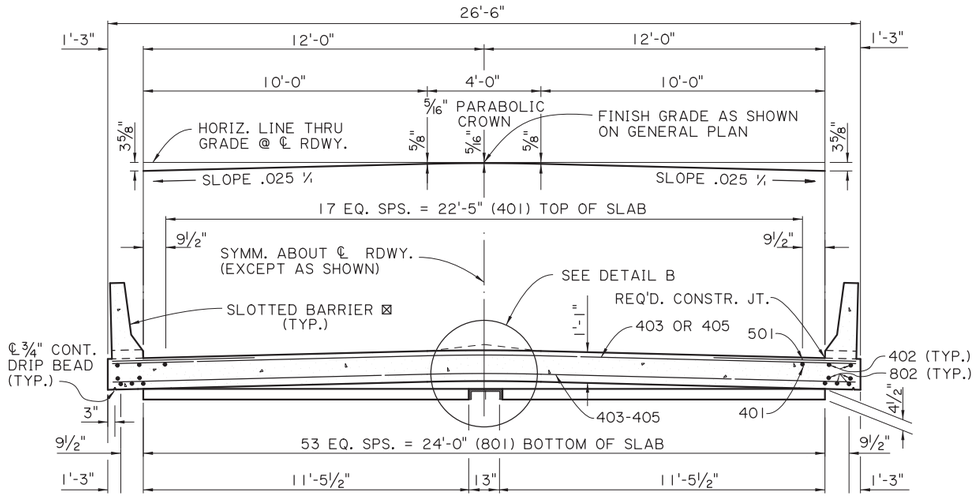

SECTION A-A
SCALE : ⅜" = 1'-0"

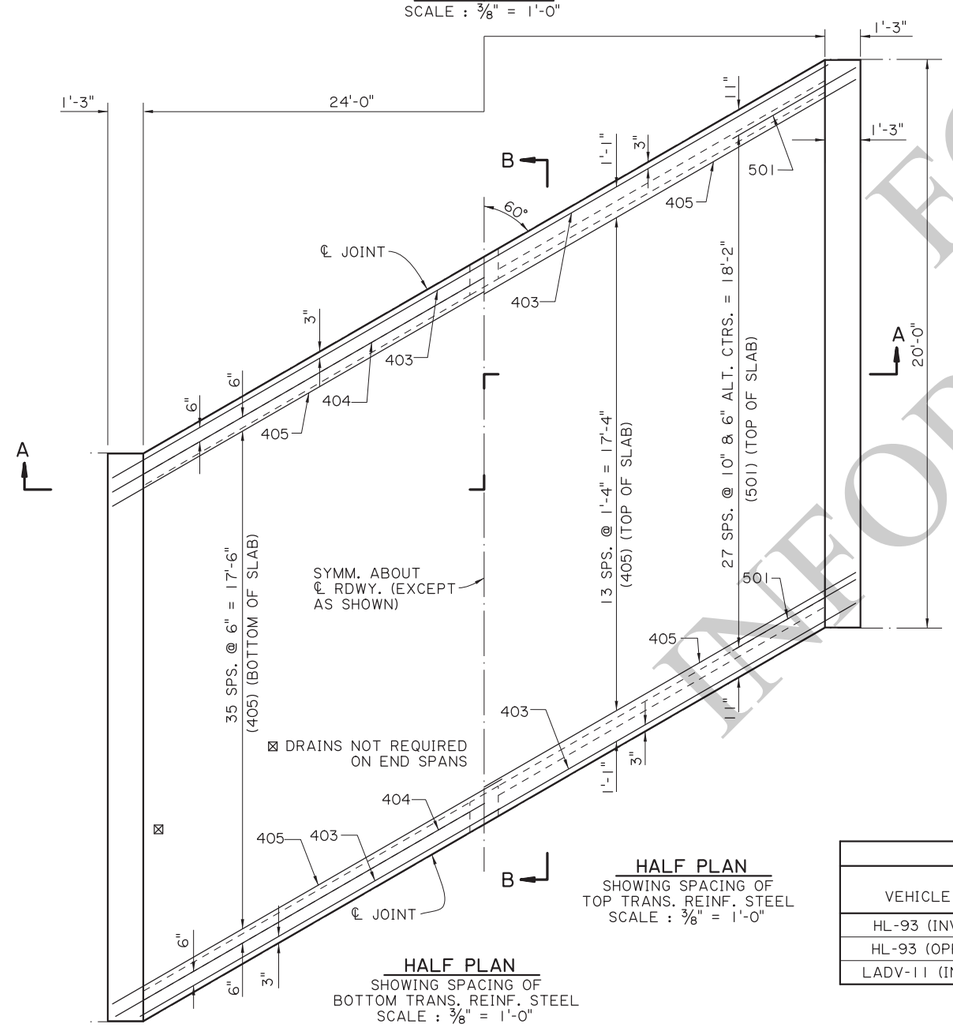

HALF PLAN
SHOWING SPACING OF BOTTOM TRANS. REINF. STEEL
SCALE : ⅜" = 1'-0"

HALF PLAN
SHOWING SPACING OF TOP TRANS. REINF. STEEL
SCALE : ⅜" = 1'-0"

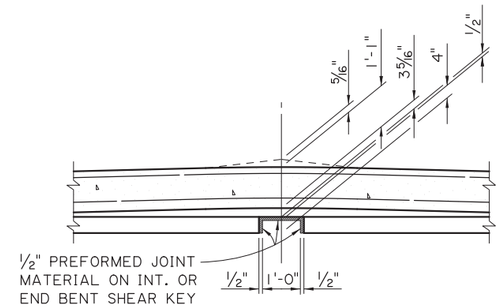

DETAIL B
SCALE : ½" = 1'-0"

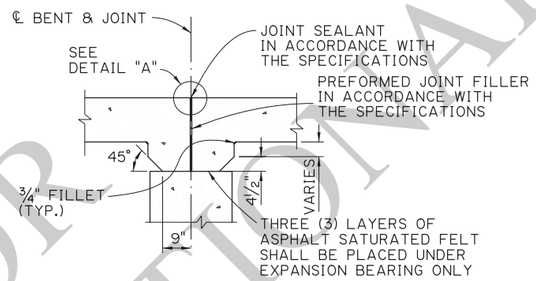

DETAIL SHOWING TYPICAL JOINT & HAUNCH
SCALE : ½" = 1'-0"

⊠ STANDARD BARRIER REQUIRED ON END SPANS.

✱ MEASURED PARALLEL TO ℄ ROADWAY.

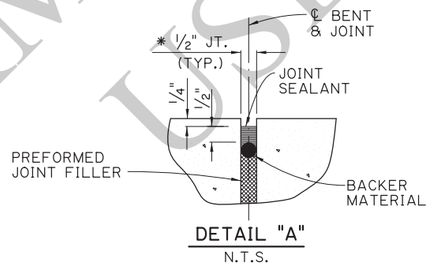

DETAIL "A"
N.T.S.

AS-DESIGNED RATING		
VEHICLE	RATING FACTOR	NOTES
HL-93 (INV)	1.346	——
HL-93 (OPR)	1.745	——
LADV-11 (INV)	1.036	MAGNIFICATION FACTOR = 1.3

ESTIMATED QUANTITIES (ONE SPAN)				
BAR	NO.	UNIT LENGTH	TOTAL LENGTH	LOCATION
801	54	19'-6"	1053'-0"	LONGIT. BOT. OF SLAB
802	8	19'-7"	156'-8"	LONGIT. BOT. OF SLAB
TOTAL NO. 8 BARS = 1209'-8" = 3230 LBS.				
501	56	5'-0"	280'-0"	TRANS. TOP OF SLAB
TOTAL NO. 5 BARS = 280'-0" = 292 LBS.				
401	18	19'-6"	351'-0"	LONGIT. TOP OF SLAB
402	4	19'-7"	78'-4"	LONGIT. TOP OF SLAB
403	4	29'-1"	116'-4"	TRANS. TOP & BOT. OF SLAB
404	2	30'-1"	60'-2"	TRANS. BOT. OF SLAB
405	50	30'-2"	1508'-4"	TRANS. TOP & BOT. OF SLAB
TOTAL NO. 4 BARS = 2114'-2" = 1412 LBS.				
TOTAL DEFORMED REINFORCING STEEL = 4934 LBS.				
CLASS A1 CONCRETE = 22.21 CU. YDS.				
CONCRETE RAILING (BARRIER TYPE) = 40.00 LIN. FT.				

SPAN NOTES:

DESIGN SPECIFICATIONS:
AASHTO LRFD BRIDGE DESIGN SPECIFICATIONS, 4th EDITION, AND 2008 & 2009 INTERIMS.

DESIGN LOADS:
THE BRIDGE DECK IS DESIGNED FOR A FUTURE WEARING COURSE OF 19 PSF. THE LIVE LOAD IS HL-93, AND LADV-11 (LOUISIANA DESIGN VEHICLE LIVE LOAD 2011).

STRUCTURAL CONCRETE:
ALL CONCRETE SHALL BE CLASS A1. EXPOSED EDGES SHALL HAVE A ¾" CHAMFER UNLESS SPECIFIED OTHERWISE. ALL BARRIER RAIL SURFACES ARE TO RECEIVE A CLASS 3 SPECIAL SURFACE FINISH.

REINFORCING STEEL:
ALL REINFORCING SHALL BE GRADE 60; DIMENSIONS RELATING TO SPACING ARE TO BAR CENTERS, DIMENSIONS RELATING TO FABRICATION ARE OUT TO OUT OF BARS, UNLESS SPECIFIED OTHERWISE. ALL REINFORCING BARS SHALL BE PLACED TO PROVIDE A MINIMUM COVER OF ONE INCH FROM THE SURFACE OF THE DRAIN HOLES TO THE FACE OF THE BARS.

GUARD RAIL:
CONFORM TO PROJECT PLANS AND GUARD RAIL STANDARD PLANS.

PAYMENT:
ALL WORK WILL BE PAID FOR UNDER THE DESIGNATED BRIDGE SUPERSTRUCTURE AND SUBSTRUCTURE PAY ITEM AND IN ACCORDANCE WITH THE SPECIFICATIONS.

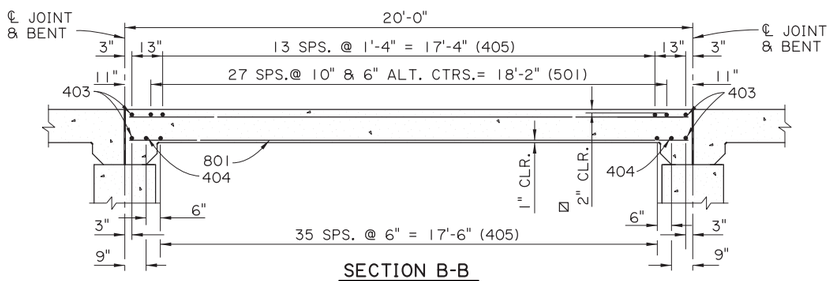

SECTION B-B
SCALE ⅜" = 1'-0"

⊠ FOR BRIDGES IN DISTRICTS 04 & 05, MIN. CONCRETE COVER IN TOP OF SLAB SHALL BE 2½".

FOR INFORMATIONAL USE

SHEET NUMBER
PARISH
CONTROL SECTION
STATE PROJECT
DESIGN J. PAINE
CHECK J. NAKHLEH
DETAIL D. HYMEL
CHECK J. NAKHLEH
REVIEW
SERIES # 2 OF 11
APPROVED BY CHIEF ENGINEER:
DATE: 12/10/2025
NO. DATE REVISION OR CHANGE ORDER DESCRIPTION BY

SPAN (1 OF 2)
20'-0" CONCRETE SLAB SPAN
24'-0" CLEAR ROADWAY
60° CROSSING TWO WAY TANGENT
PSS-60-24-20SL

LOUISIANA DEPARTMENT OF TRANSPORTATION & DEVELOPMENT
STANDARD PLAN

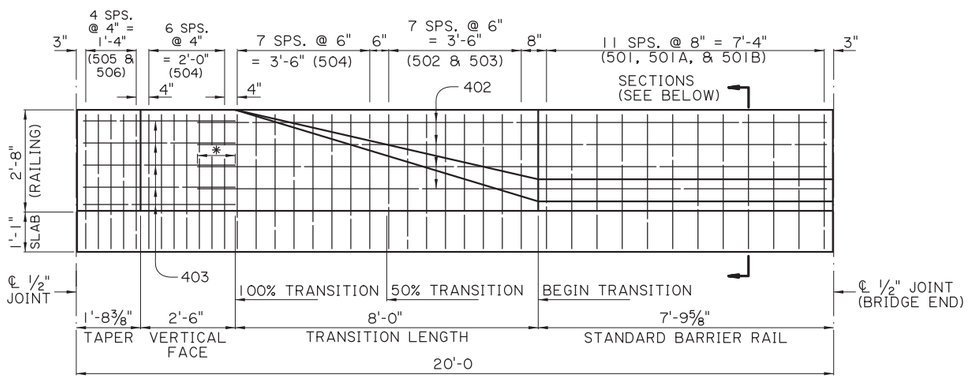

✱ 1'-0" (MIN.) SPLICE

BARRIER RAILING TRANSITION ELEVATION
(SHOWING BARRIER RAILING AT END OF BRIDGE)
SCALE: ½" = 1'-0"

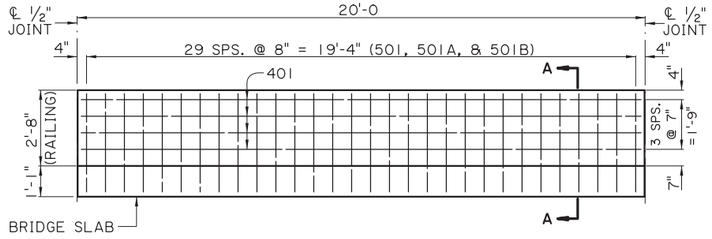

STANDARD BARRIER RAILING ELEVATION
(SHOWING BARRIER RAILING ALONG BRIDGE SLAB)
SCALE: ⅜" = 1'-0"

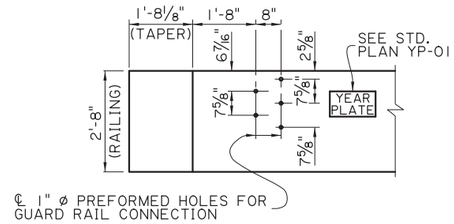

GUARD RAIL CONNECTION DETAIL
CONFORM TO GUARD RAIL STANDARD PLANS
SCALE: ½" = 1'-0"

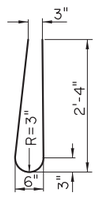

BARS 501
(4'-10" LONG)

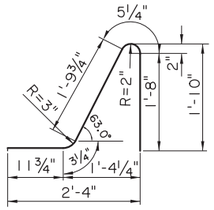

BARS 501A
(5'-2" LONG)

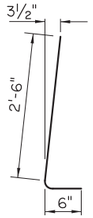

BARS 501B
(2½" ø PIN)
(3'-0" LONG)

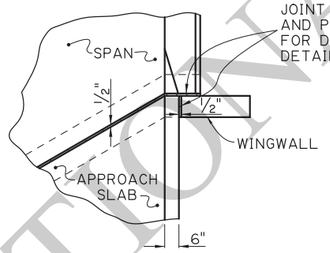

JOINT DETAIL
SCALE : ⅜" = 1'-0"

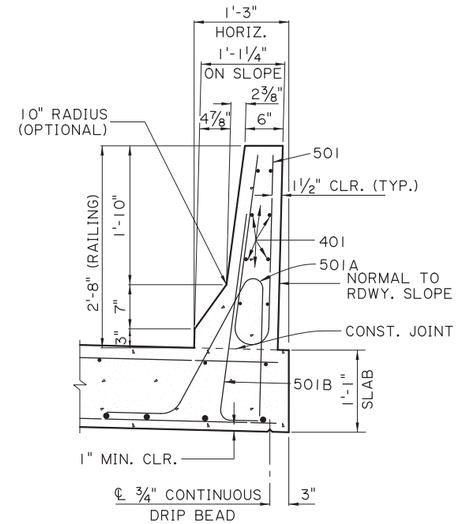

SECTION A-A
SCALE: 1" = 1'-0"

△ ON SLOPE

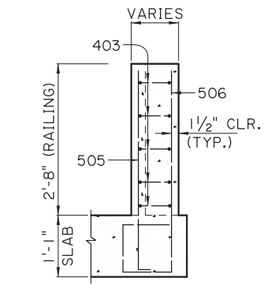

TAPER

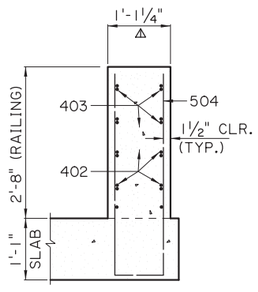

100 % TRANSITION

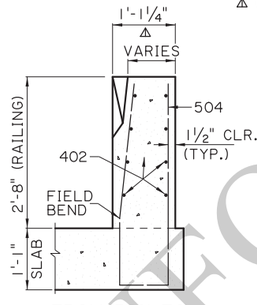

FROM 50% TO 100 % TRANSITION

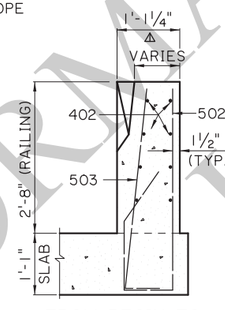

FROM BEGIN TO 50 % TRANSITION

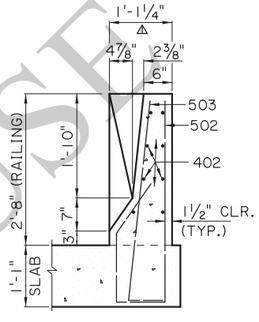

BEGIN TRANSITION

BARRIER RAILING TRANSITION SECTIONS
SCALE: ¾" = 1'-0"

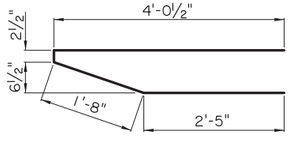

403
(2" ø PIN)

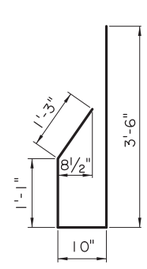

502
(2½" ø PIN)

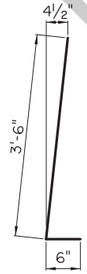

503
(2½" ø PIN)

504
(2½" ø PIN)

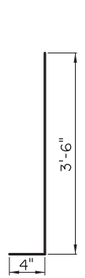

505
(2½" ø PIN)

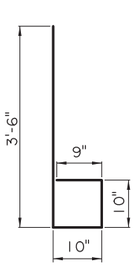

506
(2½" ø PIN)

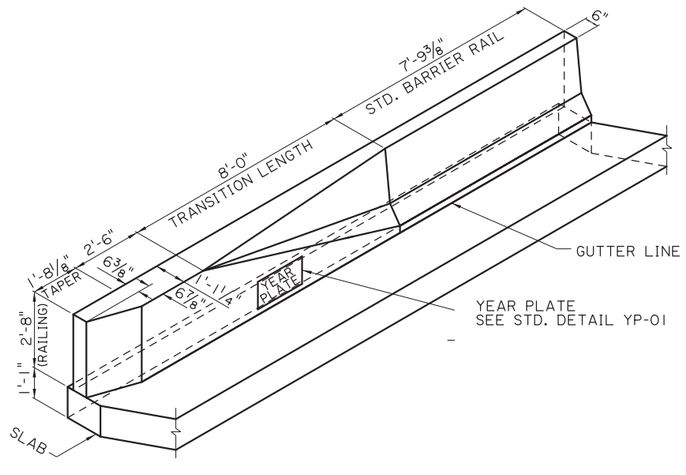

BARRIER RAILING TRANSITION SCHEMATIC
SCALE: ⅜" = 1'-0"

FOR INFORMATIONAL USE

SHEET NUMBER

PARISH | CONTROL SECTION | STATE PROJECT

DESIGN J. PAINE | CHECK J. NAKHLEH | DETAIL D. HYMEL | CHECK J. NAKHLEH | REVIEW | SERIES # 3 OF 11

APPROVED BY CHIEF ENGINEER: DATE: 12/10/2025

NO.	DATE	REVISION OR CHANGE ORDER DESCRIPTION	BY

SPAN (2 OF 2)
20'-0" PRECAST CONC. BARRIER
24'-0" CLEAR ROADWAY
60° CROSSING TWO WAY TANGENT

PSS-60-24-20SL

DOTD LOUISIANA DEPARTMENT OF TRANSPORTATION & DEVELOPMENT

STANDARD PLAN

11/20/2025 15:4

IP_PWP:d1246415\SS6024span2(LRFD).dgn

11/25/2025 08:4!

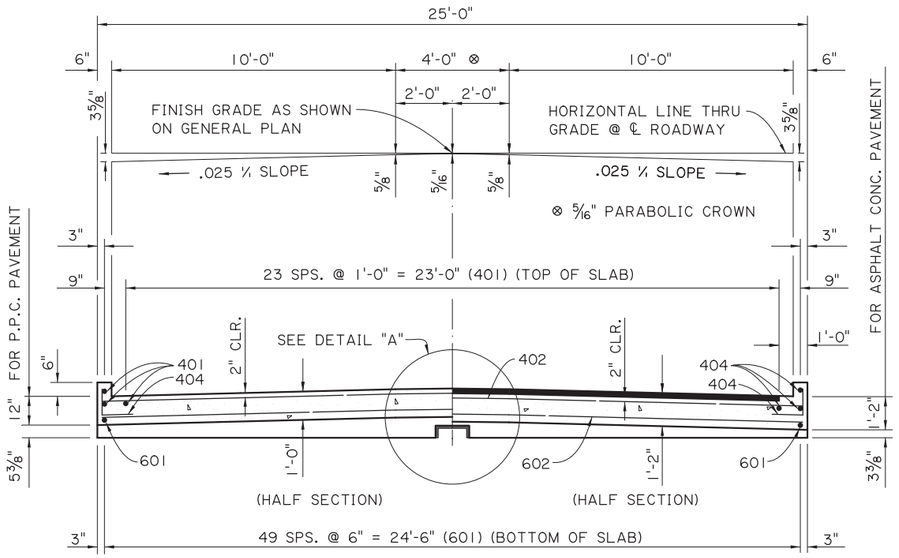

SECTION A-A

SCALE: ⅜" = 1'-0"

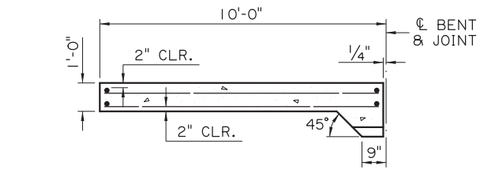

(FOR PORTLAND CEMENT CONCRETE ROADWAY PAVEMENT)

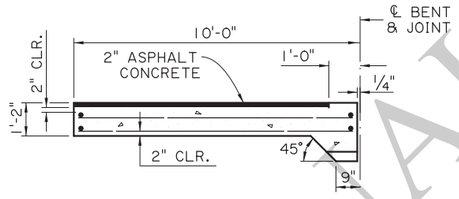

(FOR ASPHALT CONCRETE ROADWAY PAVEMENT)

SECTION ALONG ℄ ROADWAY

SCALE: ⅜" = 1'-0"

ESTIMATED QUANTITIES (ONE SLAB)				
BAR	NO.	UNIT LENGTH	TOTAL LENGTH	LOCATION
601	50	9'-7"	479'-2"	LONGIT. BOT. OF SLAB
602	2	28'-2"	56'-4"	TRANSV. BOT. OF SLAB
603	18	28'-5"	511'-6"	TRANSV. BOT. OF SLAB
TOTAL NO. 6 BARS = 1047'-0" = 1,573 LBS.				
401	28	9'-7"	268'-4"	LONGIT. TOP OF SLAB & CURB
402	2	28'-2"	56'-4"	TRANSV. TOP OF SLAB
403	9	28'-5"	255'-9"	TRANSV. TOP OF SLAB
404	14	2'-0"	28'-0"	DOWELS IN CURB
TOTAL NO. 4 BARS = 608'-5" = 406 LBS.				
⊙ TOTAL DEFORMED REINFORCING STEEL = 1,979 LBS.				
CONCRETE APPROACH SLAB = 27.78 SQ. YDS.				
⊠ ⊙ ASPHALT CONCRETE = 2.5 TONS				
⊠ ⊙ SAW CUT & SEAL = 27 LIN. FT.				

⊙ TO BE PAID FOR UNDER ITEM CONCRETE APPROACH SLABS.

⊠ REQUIRED WHEN APPROACH SLAB IS ADJACENT TO ASPHALT CONCRETE PAVEMENT.

APPROACH SLAB NOTES:

DESIGN SPECIFICATIONS: AASHTO LRFD BRIDGE DESIGN SPECIFICATIONS, 4th EDITION, WITH 2008 & 2009 INTERIMS.

STRUCTURAL CONCRETE: ALL CONCRETE SHALL BE CLASS A1. EXPOSED EDGES SHALL HAVE A ¾" CHAMFER, UNLESS SPECIFIED OTHERWISE.

REINFORCING STEEL: ALL REINFORCING STEEL SHALL BE GRADE 60. DIMENSIONS RELATING TO THE FABRICATION ARE OUT-TO-OUT OF BARS, UNLESS SPECIFIED OTHERWISE. DIMENSIONS RELATING TO SPACING SPACING ARE TO BAR CENTERS, UNLESS SPECIFIED OTHERWISE.

BEDDING MATERIAL: FOR DETAILS OF BEDDING MATERIAL AND UNDERDRAINS SEE APPROACH SLAB STANDARD DETAILS.

SAWING & SEALING: THE ASPHALT CONCRETE SHALL BE SAW CUT AT THE END OF THE CONCRETE APPROACH SLAB THE ENTIRE ROADWAY WIDTH AND SEALED WHICH WILL BE PAID FOR UNDER THE DESIGNATED ROADWAY PAY ITEM.

PAYMENT: ALL OTHER WORK WILL BE PAID FOR UNDER THE DESIGNATED BRIDGE CONCRETE APPROACH SLAB PAY ITEM AND IN ACCORDANCE WITH THE SPECIFICATIONS.

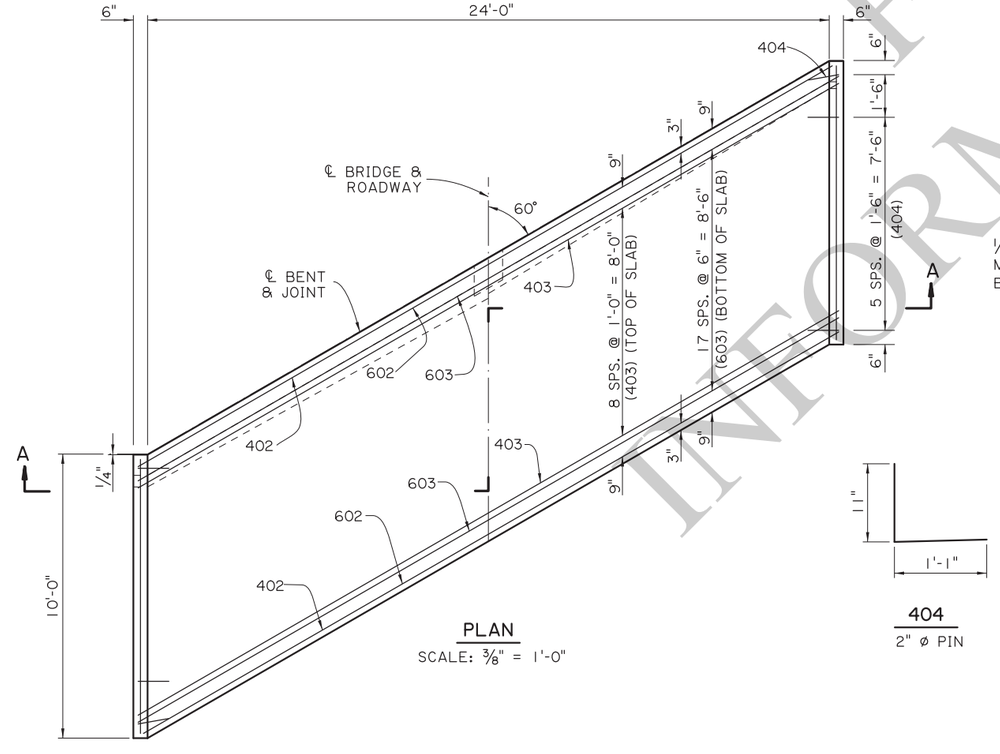

PLAN

SCALE: ⅜" = 1'-0"

404

2" ø PIN

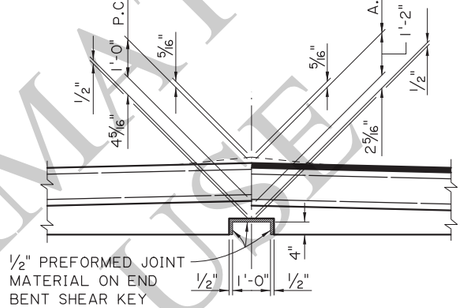

DETAIL A

SCALE : ½" = 1'-0"

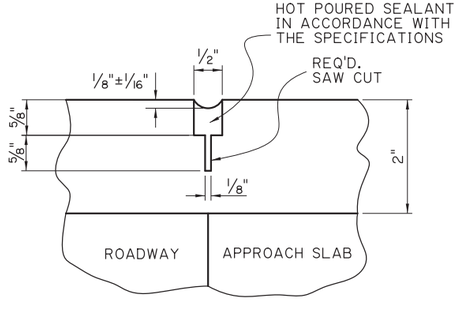

SAWING & SEALING JOINT DETAIL

N.T.S.

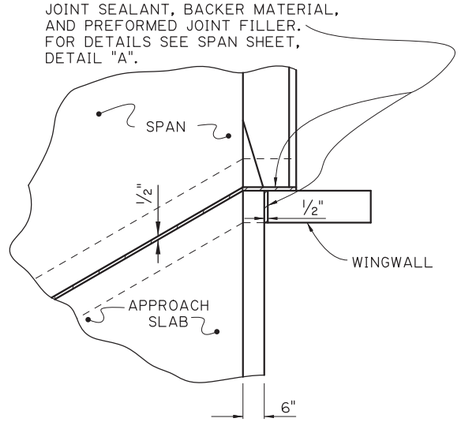

JOINT DETAIL

SCALE : ⅜" = 1'-0"

PRELIMINARY INFORMATIONAL USE ONLY

SHEET NUMBER

PARISH | CONTROL SECTION | STATE PROJECT

DESIGN B. DELATTE | CHECK J. NAKHLEH | DETAIL D.HYMEL | CHECK J. NAKHLEH | REVIEW | SERIES # 4 OF 11

APPROVED BY CHIEF ENGINEER: DATE: 12/10/2025

NO. | DATE | REVISION OR CHANGE ORDER DESCRIPTION | BY

STATE OF LOUISIANA

APPROACH SLAB
10'-0" CONCRETE APPROACH SLAB

24'-0" CLEAR ROADWAY
60° CROSSING TWO WAY TANGENT

PSS-60-24-20SL

DOTD LOUISIANA DEPARTMENT OF TRANSPORTATION & DEVELOPMENT

STANDARD PLAN

IP_PWP:d1246415\SS6024aprslab(LRFD).dgn

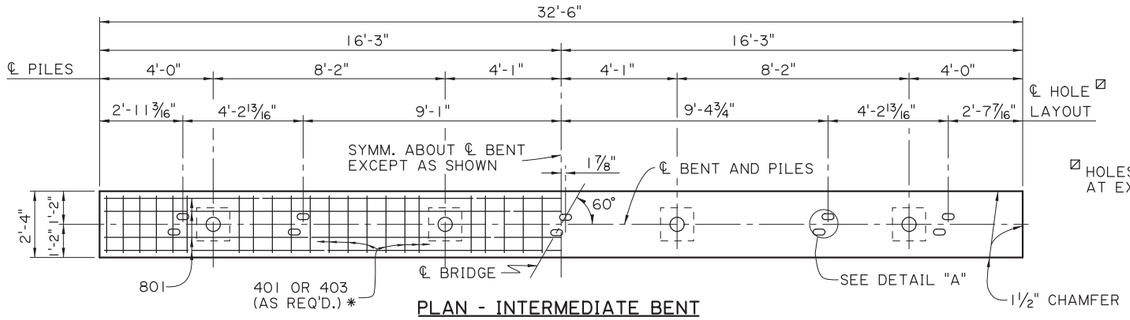

PLAN - INTERMEDIATE BENT
SCALE 3/8" = 1'-0"

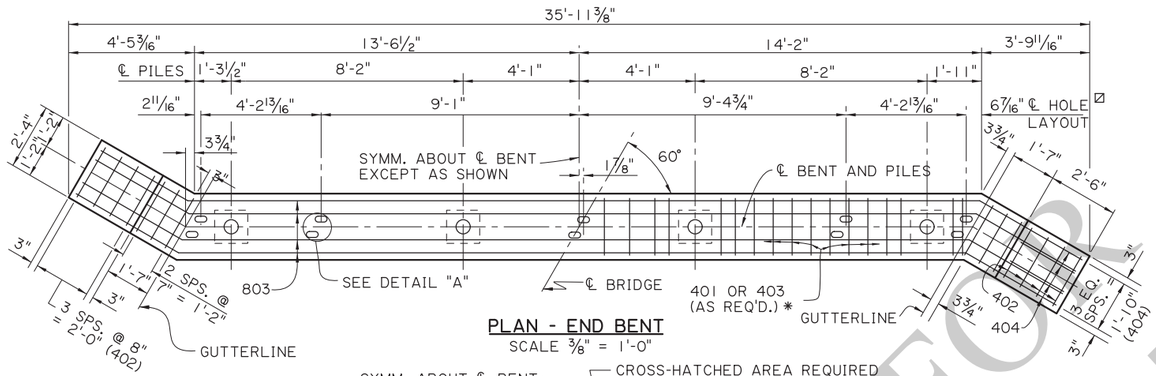

PLAN - END BENT
SCALE 3/8" = 1'-0"

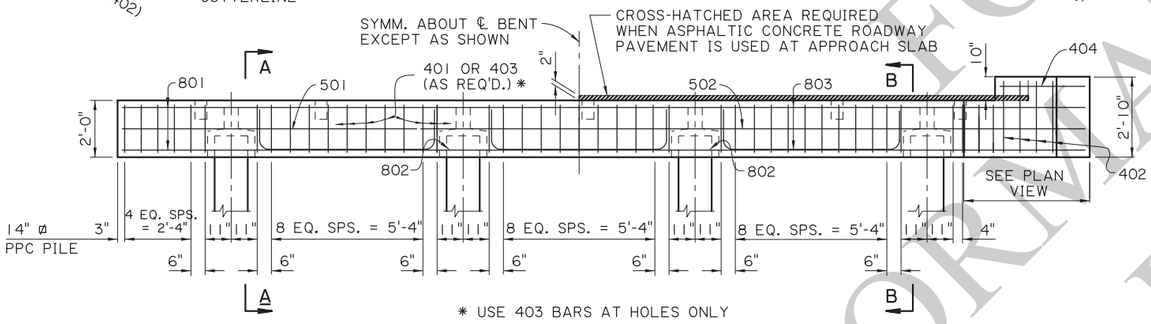

* USE 403 BARS AT HOLES ONLY

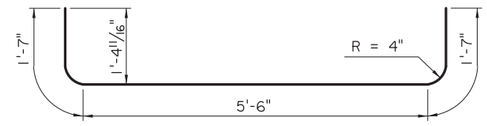

802
6" ø PIN

℄ HOLES ARE OPTIONAL AT EXPANSION ENDS.

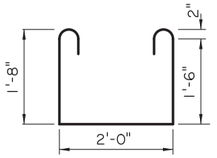

403
2" ø PIN

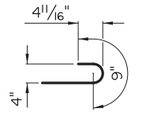

180° HOOK FOR 403 BARS
3" ø PIN

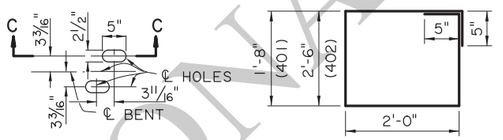

DETAIL A
SCALE 3/4" = 1'-0"

401 & 402
2" ø PIN

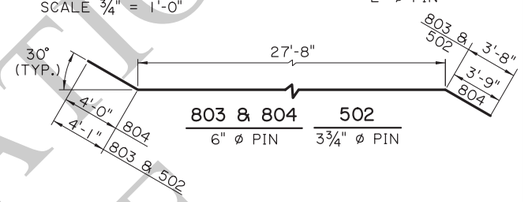

803 & 804
6" ø PIN

502
3 3/4" ø PIN

AS-DESIGNED RATING		
VEHICLE	RATING FACTOR	NOTES
HL-93 (INV)	1.819	———
HL-93 (OPR)	2.358	———
LADV-11 (INV)	1.399	MAGNIFICATION FACTOR = 1.3

ESTIMATED QUANTITIES (ONE INTER. BENT)				
BAR	NO.	UNIT LENGTH	TOTAL LENGTH	LOCATION
1001	4	2'-4"	9'-4"	DOWELS IN PILES
TOTAL NO. 10 BARS = 9'-4" = 40 LBS.				
801	6	32'-2"	193'-0"	LONGIT. IN CAP
802	6	8'-8"	52'-0"	LONGIT. IN CAP BTW. PILES
TOTAL NO. 8 BARS = 245'-0" = 654 LBS.				
501	2	32'-2"	64'-4"	LONGIT. IN CAP
TOTAL NO. 5 BARS = 64'-4" = 67 LBS.				
401	36	8'-2"	294'-0"	STIRRUPS IN CAP
403	9	6'-6"	58'-6"	STIRRUPS IN CAP
TOTAL NO. 4 BARS = 352'-6" = 235 LBS.				
TOTAL DEFORMED REINFORCING STEEL = 996 LBS.				
TOTAL CLASS P1 CONCRETE = 5.17 CU. YDS.				
MAX. PILE LOAD: SERVICE DEAD LOAD = 19 TONS SERVICE LIVE LOAD = 36 TONS FACTORED TOTAL LOAD = 76 TONS				
TOTAL GROUT FOR PILE RECESSES = 0.26 CU. YDS.				

ESTIMATED QUANTITIES (ONE END BENT)				
BAR	NO.	UNIT LENGTH	TOTAL LENGTH	LOCATION
1001	4	2'-4"	9'-4"	DOWELS IN PILES
TOTAL NO. 10 BARS = 9'-4" = 40 LBS.				
802	6	8'-8"	52'-0"	LONGIT. IN CAP BTW. PILES
803	4	35'-5"	141'-8"	LONGIT. IN CAP
804	2	35'-5"	70'-10"	LONGIT. IN CAP
TOTAL NO. 8 BARS = 264'-6" = 706 LBS.				
502	2	35'-5"	70'-10"	LONGIT. IN CAP
TOTAL NO. 5 BARS = 70'-10" = 74 LBS.				
401	34	8'-2"	277'-8"	STIRRUPS IN CAP
402	8	9'-10"	78'-8"	STIRRUPS IN WINGWALL
403	4	6'-6"	58'-6"	STIRRUPS IN CAP
404	8	2'-2"	17'-4"	LONGIT. IN WINGWALL
TOTAL NO. 4 BARS = 432'-2" = 289 LBS.				
TOTAL DEFORMED REINFORCING STEEL= 1,109 LBS.				
⊗ TOTAL CLASS P1 CONCRETE = 6.12 CU. YDS.				
MAX. PILE LOAD: SERVICE DEAD LOAD = 19 TONS SERVICE LIVE LOAD = 36 TONS FACTORED TOTAL LOAD = 76 TONS				
TOTAL GROUT FOR PILE RECESSES = 0.26 CU. YDS.				

⊗ ADD 0.22 CU. YDS. OF CLASS P1 CONCRETE PER BENT WHEN ASPHALTIC CONCRETE ROADWAY PAVEMENT IS USED AT APPROACH SLAB.

HALF ELEVATION - INTERMEDIATE BENT
SCALE 3/8" = 1'-0"

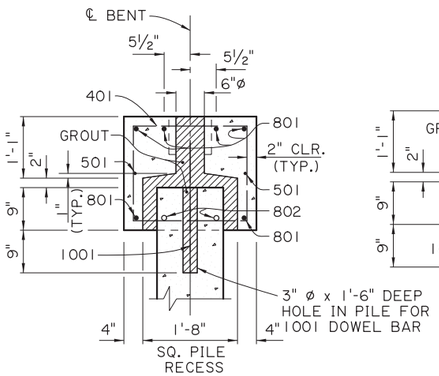

SECTION A-A
SCALE: 3/4" = 1'-0"

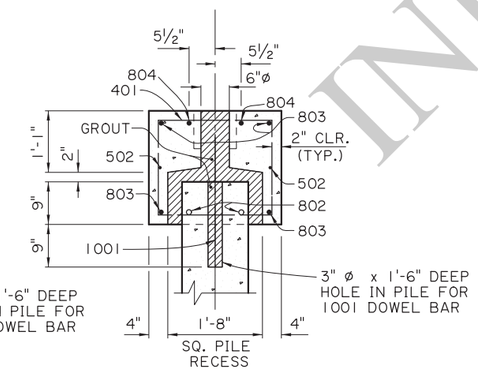

SECTION B-B
SCALE: 3/4" = 1'-0"
(WHEN PORTLAND CEMENT CONCRETE ROADWAY PAVEMENT IS USED AT APPROACH SLAB)

HALF ELEVATION - END BENT
SCALE 3/8" = 1'-0"

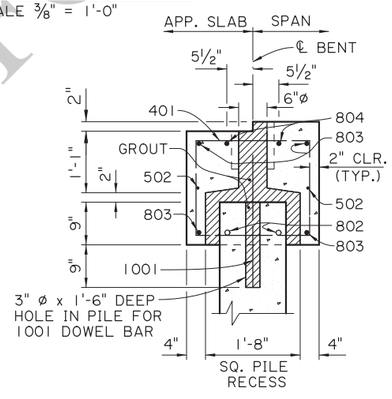

SECTION B-B
SCALE: 3/4" = 1'-0"
(WHEN ASPHALTIC CONCRETE ROADWAY PAVEMENT IS USED AT APPROACH SLAB)

ALTERNATE BENT NOTES:

DESIGN SPECIFICATIONS: AASHTO LRFD BRIDGE DESIGN SPECIFICATIONS, 4th EDITION, WITH 2008 & 2009 INTERIMS.
DESIGN LOAD: LIVE LOAD IS HL-93, AND LADV-11 (LOUISIANA DESIGN VEHICLE LIVE LOAD 2011).
STRUCTURAL CONCRETE: ALL CONCRETE SHALL BE CLASS P1. STEEL SIDE FORMS AND STEEL OR CONCRETE BOTTOM FORMS SHALL BE USED FOR PRECAST COMPONENTS. EXPOSED EDGES SHALL HAVE A 3/4" CHAMFER UNLESS SPECIFIED OTHERWISE. ALL SURFACES SHALL RECEIVE A CLASS 1 ORDINARY SURFACE FINISH UPON REMOVAL OF THE FORMS. ALL EXPOSED FACES OF WINGWALLS AND ENDS OF CAPS SHALL RECEIVE A CLASS 3 SPECIAL SURFACE FINISH.
REINFORCING STEEL: ALL REINFORCING SHALL BE GRADE 60. DIMENSIONS RELATING TO FABRICATION ARE OUT TO OUT OF BARS, UNLESS SPECIFIED OTHERWISE. DIMENSIONS RELATING TO SPACING ARE TO BAR CENTERS, UNLESS SPECIFIED OTHERWISE.
GROUT: THE GROUT SHALL BE AN APPROVED FLOWABLE NON-SHRINK GROUT LISTED ON AML. THE GROUT SHALL BE TESTED FOR ACCEPTANCE PRIOR TO USAGE. SURFACES SHALL BE THOROUGHLY SATURATED WITH WATER BY FLOODING THE VOID FOR APPROXIMATELY 5 MINUTES IMMEDIATELY BEFORE THE GROUT IS PLACED. ONLY POTABLE WATER SHALL BE USED FOR SATURATION AND MIXING PURPOSES.
PRECAST UNITS: THE PLANS FOR AN ONGOING OPERATION OF FABRICATING FACILITIES SHALL BE APPROVED BY THE DEPARTMENT. EACH UNIT SHALL HAVE THE FABRICATOR'S MARK AND UNIQUE NUMBER, MEETING THE APPROVAL OF THE ENGINEER, STAMPED OR SCRIBED IN THE PLASTIC CONCRETE. ALL UNITS SHALL BE HELD AT THE PLANT FOR A MINIMUM OF 10 DAYS AFTER CASTING. THE CONCRETE SHALL REACH A MINIMUM STRENGTH OF 3,000 PSI BEFORE HANDLING IS PERMITTED. THE LIFTING INSERTS SHALL BE 1" TYPE S INSERTS AS MANUFACTURED BY DAYTON-SUPERIOR CORPORATION OR AN APPROVED EQUAL. EACH INSERT SHALL HAVE A MINIMUM LOAD CAPACITY OF 10,000 POUNDS. FOUR INSERTS WITH 1" ø x 5" LONG COIL BOLTS SHALL BE PLACED IN THE TOP OF THE UNITS AND LOCATED AT A DISTANCE 21% OF ITS LENGTH (+/- 6") FROM EACH END AND 6" FROM THE EDGES. INSERT HOLES SHALL BE GROUT FILLED AFTER PLACEMENT OF THE UNIT. AT THE CONTRACTOR'S OPTION, A SLING OF SUFFICIENT CAPACITY MAY BE USED FOR LIFTING, PROVIDED THE SAME PICKUP LOCATIONS FROM THE ENDS ARE USED.
PRECAST CONCRETE PILES: CONFORM TO PILE STANDARD PLAN AND PROJECT PLANS FOR FABRICATION AND INSTALLATION. IF TOP CENTER OF DRIVEN PILE IS OUTSIDE OF SPECIFIED HORIZONTAL TOLERANCES BUT WITHIN SPECIFIED VERTICAL TOLERANCES, PROVIDE CAST-IN-PLACE BENT CAP IN ACCORDANCE WITH THIS STANDARD PLAN. PILES WILL BE PAID FOR UNDER THE DESIGNATED PILE PAY ITEMS.
PAYMENT: ALL OTHER WORK WILL BE PAID FOR UNDER THE DESIGNATED BRIDGE SUPERSTRUCTURE AND SUBSTRUCTURE PAY ITEM AND IN ACCORDANCE WITH THE SPECIFICATIONS.

FOR INFORMATIONAL USE

SHEET NUMBER
PARISH
CONTROL SECTION
STATE PROJECT
DESIGN B. DELATTE
CHECK J. NAKHLEH
DETAIL D. HYMEL
CHECK J. NAKHLEH
REVIEW
SERIES # 5 OF 11
APPROVED BY CHIEF ENGINEER:
DATE: 12/10/2025
REVISION OR CHANGE ORDER DESCRIPTION
NO. DATE BY

ALTERNATE BENTS
PRECAST CONCRETE BENT
24'-0" CLEAR ROADWAY
60° CROSSING TWO WAY TANGENT
PSS-60-24-20SL

DOTD
LOUISIANA DEPARTMENT OF TRANSPORTATION & DEVELOPMENT
STANDARD PLAN

11/20/2025 16:0
IP_PWP:d1246415\SS6024altbent1(LRFD).dgn

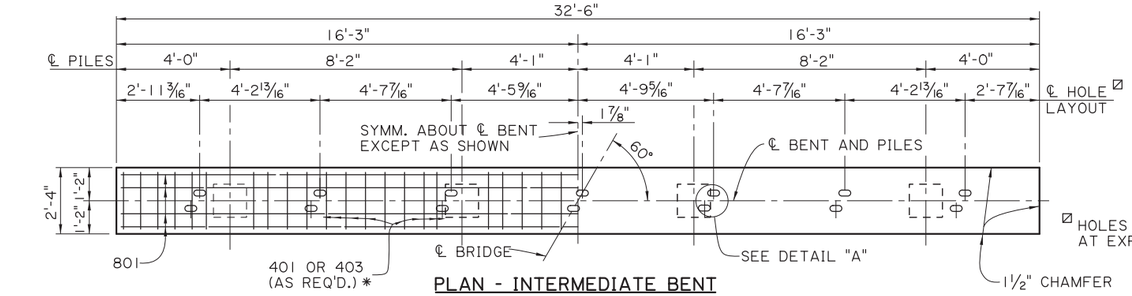

PLAN - INTERMEDIATE BENT
SCALE 3/8" = 1'-0"

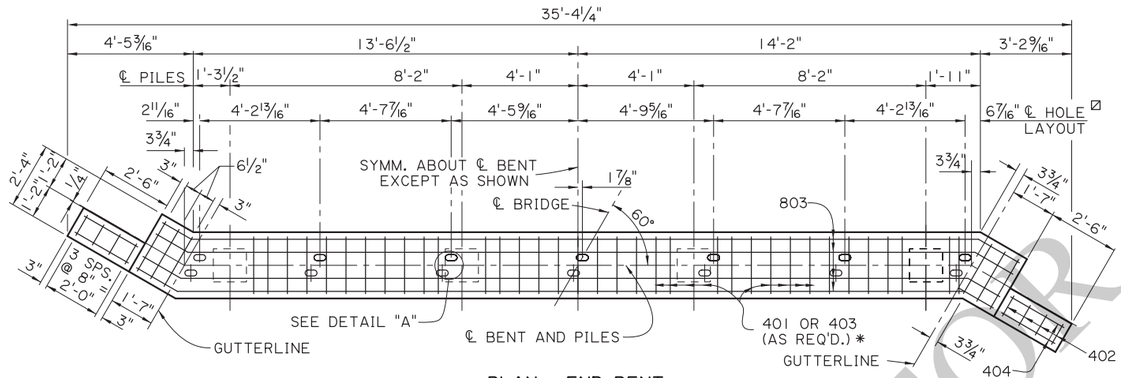

PLAN - END BENT
SCALE 3/8" = 1'-0"

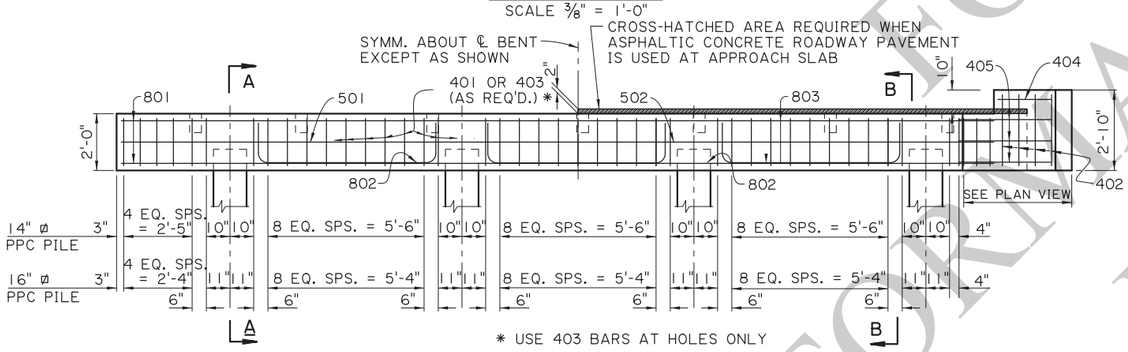

* USE 403 BARS AT HOLES ONLY

HALF ELEVATION - INTERMEDIATE BENT
SCALE 3/8" = 1'-0"

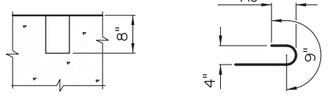

SECTION C-C
SCALE 3/4" = 1'-0"

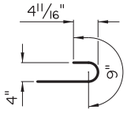

180° HOOK FOR 403 BARS
3" ø PIN

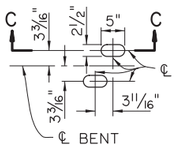

DETAIL A
SCALE 3/4" = 1'-0"

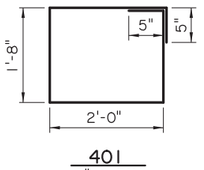

401
2" ø PIN

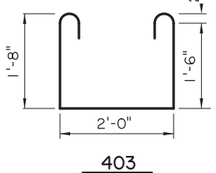

403
2" ø PIN

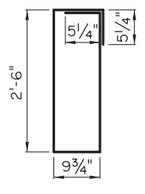

402
2" ø PIN

HALF ELEVATION - END BENT
SCALE 3/8" = 1'-0"

AS-DESIGNED RATING		
VEHICLE	RATING FACTOR	NOTES
HL-93 (INV)	1.495	———
HL-93 (OPR)	1.938	———
LADV-11 (INV)	1.150	MAGNIFICATION FACTOR = 1.3

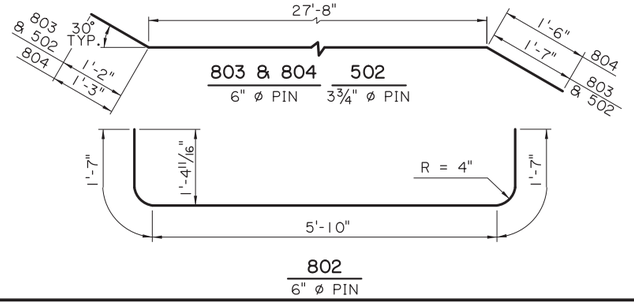

802
6" ø PIN

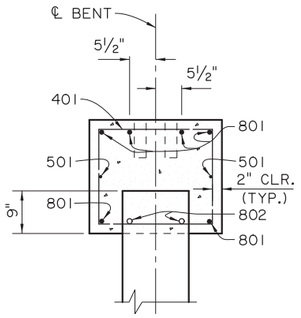

SECTION A-A
SCALE: 3/4" = 1'-0"

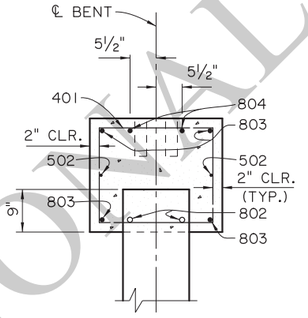

SECTION B-B
SCALE: 3/4" = 1'-0"
(WHEN PORTLAND CEMENT CONCRETE ROADWAY PAVEMENT IS USED AT APPR. SLAB.)

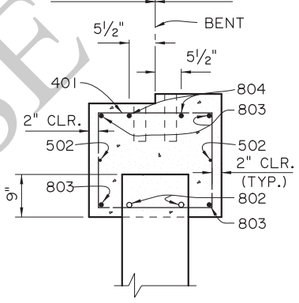

SECTION B-B
SCALE: 3/4" = 1'-0"
(WHEN ASPHALTIC CONCRETE ROADWAY PAVEMENT IS USED AT APPR. SLAB.)

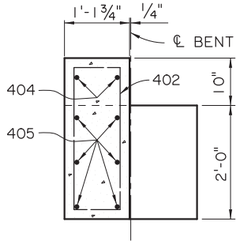

END ELEVATION
SCALE: 3/4" = 1'-0"

ESTIMATED QUANTITIES (ONE INTER. BENT)				
BAR	NO.	UNIT LENGTH	TOTAL LENGTH	LOCATION
801	6	32'-2"	193'-0"	LONGIT. IN CAP
802	6	9'-0"	54'-0"	LONGIT. IN CAP BTW. PILES
TOTAL NO. 8 BARS = 247'-0" = 659 LBS.				
501	2	32'-2"	64'-4"	LONGIT. IN CAP
TOTAL NO. 5 BARS = 64'-4" = 67 LBS.				
401	34	8'-2"	277'-8"	STIRRUPS IN CAP
403	11	6'-6"	71'-6"	STIRRUPS IN CAP
TOTAL NO. 4 BARS = 349'-2" = 233 LBS.				
TOTAL DEFORMED REINFORCING STEEL = 959 LBS.				
⊠ TOTAL CLASS A1 CONCRETE = 5.39 CU. YDS.				
MAX. PILE LOAD: SERVICE DEAD LOAD = 19 TONS SERVICE LIVE LOAD = 36 TONS FACTORED TOTAL LOAD = 76 TONS				

⊠ 16" ø PPC PILES USED FOR ESTIMATING PURPOSES ONLY. (ADD 0.05 CU. YDS. OF CLASS A1 CONCRETE PER BENT WHEN 14" ø PPC PILES ARE USED.)

ESTIMATED QUANTITIES (ONE END BENT)				
BAR	NO.	UNIT LENGTH	TOTAL LENGTH	LOCATION
802	6	9'-0"	54'-0"	LONGIT. IN CAP BTW. PILES
803	4	30'-5"	121'-8"	LONGIT. IN CAP
804	2	30'-5"	60'-10"	LONGIT. IN CAP
TOTAL NO. 8 BARS = 236'-6" = 631 LBS.				
502	2	30'-5"	60'-10"	LONGIT. IN CAP
TOTAL NO. 5 BARS = 60'-10" = 64 LBS.				
401	32	8'-2"	261'-4"	STIRRUPS IN CAP
402	8	7'-6"	60'-0"	STIRRUPS IN WINGWALL
403	11	6'-6"	71'-6"	STIRRUPS IN CAP
404	4	2'-2"	8'-8"	LONGIT. IN WINGWALL
405	12	3'-11"	47'-0"	LONGIT. IN WINGWALL
TOTAL NO. 4 BARS = 448'-6" = 300 LBS.				
TOTAL DEFORMED REINFORCING STEEL = 995 LBS.				
⊗ TOTAL CLASS A1 CONCRETE = 5.71 CU. YDS.				
MAX. PILE LOAD: SERVICE DEAD LOAD = 19 TONS SERVICE LIVE LOAD = 36 TONS FACTORED TOTAL LOAD = 76 TONS				

⊗ 16" ø PPC PILES USED FOR ESTIMATING PURPOSES ONLY. (ADD 0.05 CU. YDS. OF CLASS A1 CONCRETE PER BENT WHEN 14" ø PPC PILES ARE USED.) ADD 0.22 CU. YDS. OF CLASS A1 CONCRETE PER BENT WHEN ASPHALTIC CONCRETE ROADWAY PAVEMENT IS USED AT APPROACH SLAB.

ALTERNATE BENT NOTES:

DESIGN SPECIFICATIONS: AASHTO LRFD BRIDGE DESIGN SPECIFICATIONS, 4th EDITION, WITH 2008 & 2009 INTERIMS.

DESIGN LOAD: LIVE LOAD IS HL-93, AND LADV-11 (LOUISIANA DESIGN VEHICLE LIVE LOAD 2011).

STRUCTURAL CONCRETE: ALL CONCRETE SHALL BE CLASS A1. EXPOSED EDGES SHALL HAVE A 3/4" CHAMFER UNLESS SPECIFIED OTHERWISE. ALL EXPOSED FACES OF WINGWALLS AND ENDS OF CAPS SHALL RECEIVE A SURFACE FINISH AS PER THE SPECIFICATIONS UNLESS SPECIFIED OTHERWISE.

REINFORCING STEEL: ALL REINFORCING SHALL BE GRADE 60. DIMENSIONS RELATING TO FABRICATION ARE OUT TO OUT OF BARS, UNLESS SPECIFIED OTHERWISE. DIMENSIONS RELATING TO SPACING ARE TO BAR CENTERS, UNLESS SPECIFIED OTHERWISE.

PRECAST CONCRETE PILES: CONFORM TO PILE STANDARD PLAN AND PROJECT PLANS FOR FABRICATION AND INSTALLATION. PILES WILL BE PAID FOR UNDER THE DESIGNATED PILE PAY ITEMS.

PAYMENT: ALL OTHER WORK WILL BE PAID FOR UNDER THE DESIGNATED BRIDGE SUPERSTRUCTURE AND SUBSTRUCTURE PAY ITEM AND IN ACCORDANCE WITH THE SPECIFICATIONS.

INFORMATIONAL USE ONLY

SHEET NUMBER

PARISH	CONTROL SECTION	STATE PROJECT
B. DELATTE	D. HYMEL	SERIES # 6 OF 11
DESIGN J. NAKHLEH	DETAIL J. NAKHLEH	REVIEW
CHECK	CHECK	

APPROVED BY CHIEF ENGINEER: DATE: 12/10/2025

NO.	DATE	REVISION OR CHANGE ORDER DESCRIPTION	BY

STATE OF LOUISIANA DEPARTMENT OF TRANSPORTATION AND DEVELOPMENT

ALTERNATE BENTS CAST-IN-PLACE CONCRETE BENTS

24'-0" CLEAR ROADWAY
60° CROSSING TWO WAY TANGENT

PSS-60-24-20SL

DOTD LOUISIANA DEPARTMENT OF TRANSPORTATION & DEVELOPMENT

STANDARD PLAN

11/25/2025 08:5

IP_PWP:d1246415\SS6024altbent2(LRFD).dgn

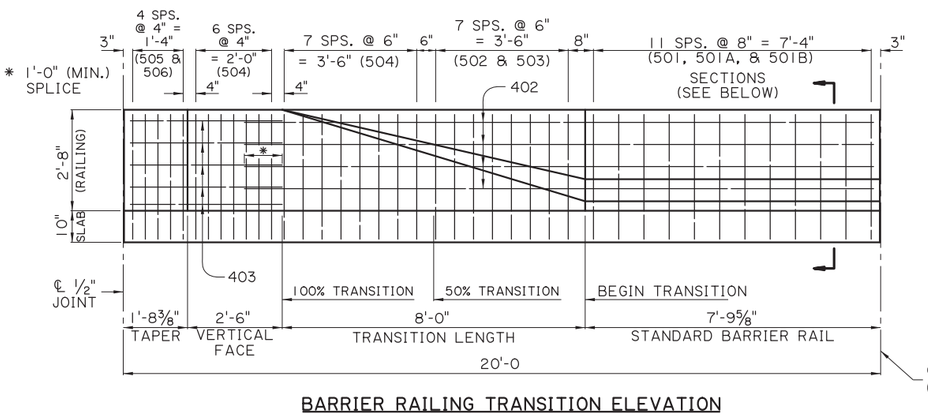

BARRIER RAILING TRANSITION ELEVATION
(SHOWING BARRIER RAILING AT END OF BRIDGE)
SCALE: ½" = 1'-0"

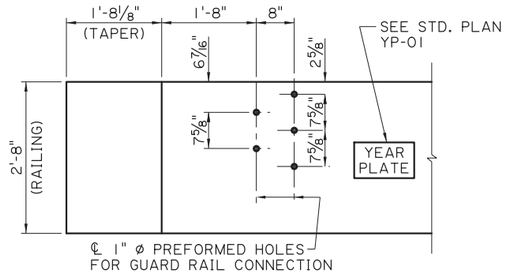

GUARD RAIL CONNECTION DETAIL
CONFORM TO GUARD RAIL STANDARD PLANS
SCALE : ¾" = 1'-0"

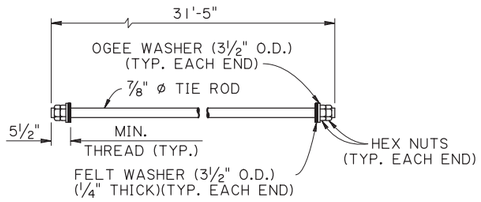

NOTE:
THE NUTS & WASHERS FOR THE TIE ROD SHALL BE ZINC COATED AND THE EXPOSED ENDS TO THE TIE RODS SHALL BE PAINTED WITH AN APPROVED COATING. AS A FINAL OPERATION THE CONTRACTOR SHALL BE REQUIRED TO TORQUE THE INSTALLED TIE ROD TO 170 FT. LBS. JUST PRIOR TO PAINTING. ALL EXPOSED ENDS SHALL BE PAINTED WITH AN APPROVED COATING AFTER STRESSING. ONE (1) MECHANICAL SPLICE MAY BE USED IN SPLICING THE ⅞" ø TIE ROD. THE SPLICE SHALL DEVELOP AT LEAST 125% OF THE SPECIFIED YIELD STRENGTH OF THE TIE ROD IN TENSION. THE MECHANICAL SPLICE SHALL BE ZINC COATED OR PAINTED WITH AN APPROVED COLD GALVANIZING REPAIR COMPOUND FROM AML PRIOR TO PLACING THE TIE ROD IN THE STRUCTURE.

DETAILS OF TIE ROD

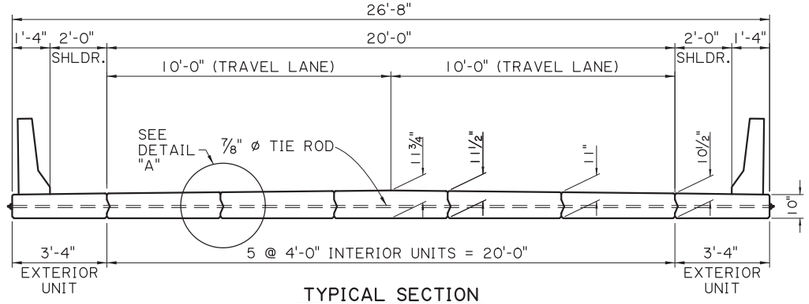

TYPICAL SECTION

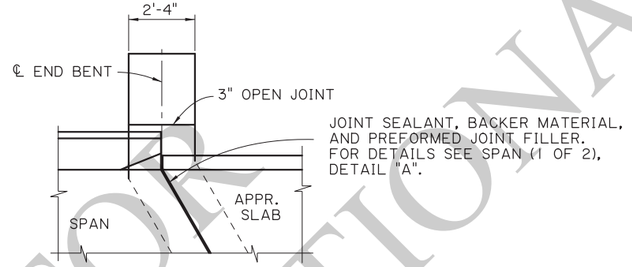

JOINT DETAIL
N.T.S.

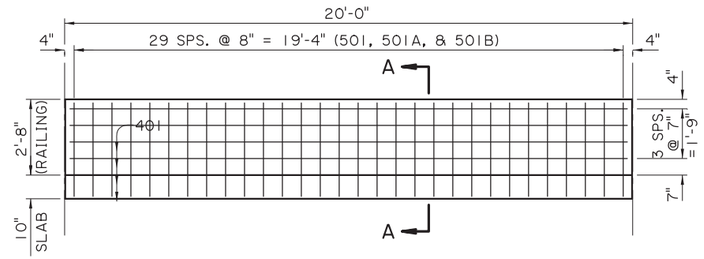

STANDARD BARRIER RAILING ELEVATION
(SHOWING BARRIER RAILING ALONG BRIDGE END)
SCALE : ⅜" = 1'-0"

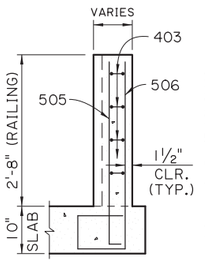

TAPER

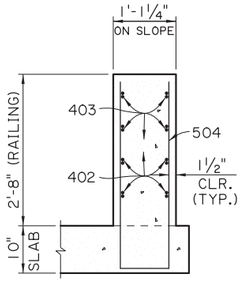

100 % TRANSITION

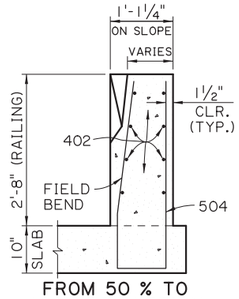

FROM 50 % TO 100% TRANSITION

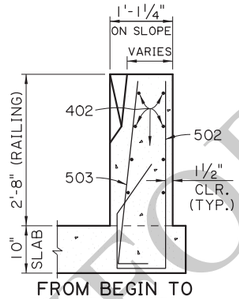

FROM BEGIN TO 50 % TRANSITION

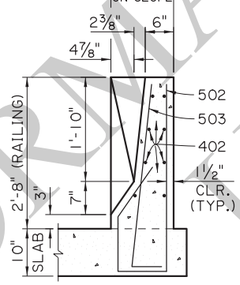

BEGIN TRANSITION

BARRIER RAILING TRANSITION SECTIONS
SCALE: ¾" = 1'-0"

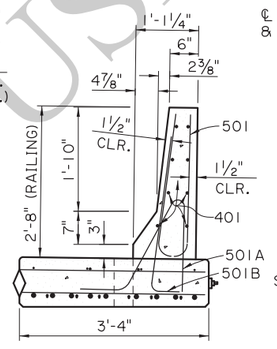

SECTION A-A
SCALE : ¾" = 1'-0"

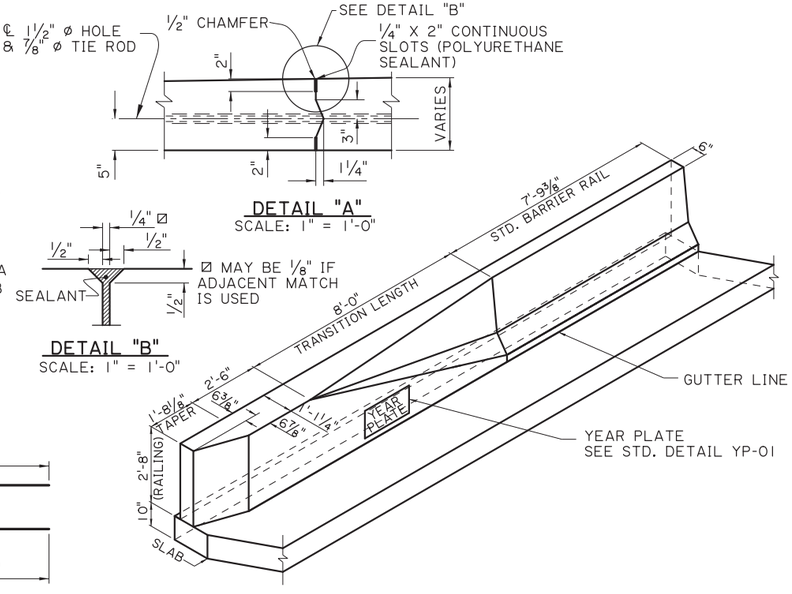

DETAIL "A"
SCALE: 1" = 1'-0"

DETAIL "B"
SCALE: 1" = 1'-0"

BARRIER RAILING TRANSITION SCHEMATIC
SCALE : ⅜" = 1'-0"

BARS 501
(4'-10" LONG)

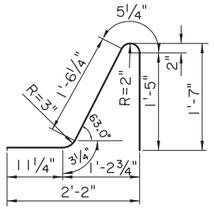

BARS 501A
(4'-7" LONG)

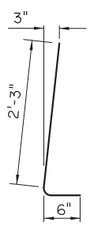

BARS 501B
(2½" ø PIN)
(2'-9" LONG)

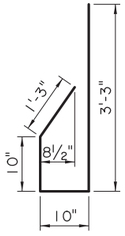

502
(2½" ø PIN)
(6'-2" LONG)

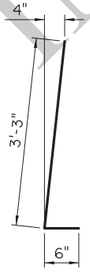

503
(2½" ø PIN)
(3'-9" LONG)

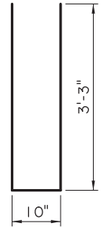

504
(2½" ø PIN)
(7'-4" LONG)

505
(2½" ø PIN)
(3'-7" LONG)

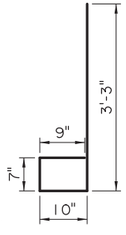

506
(2½" ø PIN)
(5'-5" LONG)

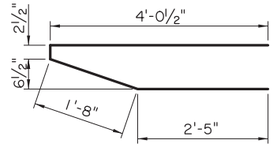

403
(2" ø PIN)
(8'-4" LONG)

FOR INFORMATIONAL USE

SHEET NUMBER

PARISH | CONTROL SECTION | STATE PROJECT

DESIGN B. DELATTE | CHECK J. NAKHLEH | DETAIL D. HYMEL | CHECK J. NAKHLEH | REVIEW | SERIES # 7 OF 11

APPROVED BY CHIEF ENGINEER: DATE: 12/10/2025

NO. | DATE | REVISION OR CHANGE ORDER DESCRIPTION | BY

STATE OF LOUISIANA — DEPARTMENT OF TRANSPORTATION AND DEVELOPMENT

ALTERNATE SPAN (1 OF 4)
20'-0" CONCRETE SLAB SPAN
24'-0" CLEAR ROADWAY
60° CROSSING TWO WAY TANGENT
PSS-60-24-20SL

DOTD LOUISIANA DEPARTMENT OF TRANSPORTATION & DEVELOPMENT

STANDARD PLAN

11/20/2025 16:1

IP_PWP:d1246415\SS6024altspan1(LRFD).dgn

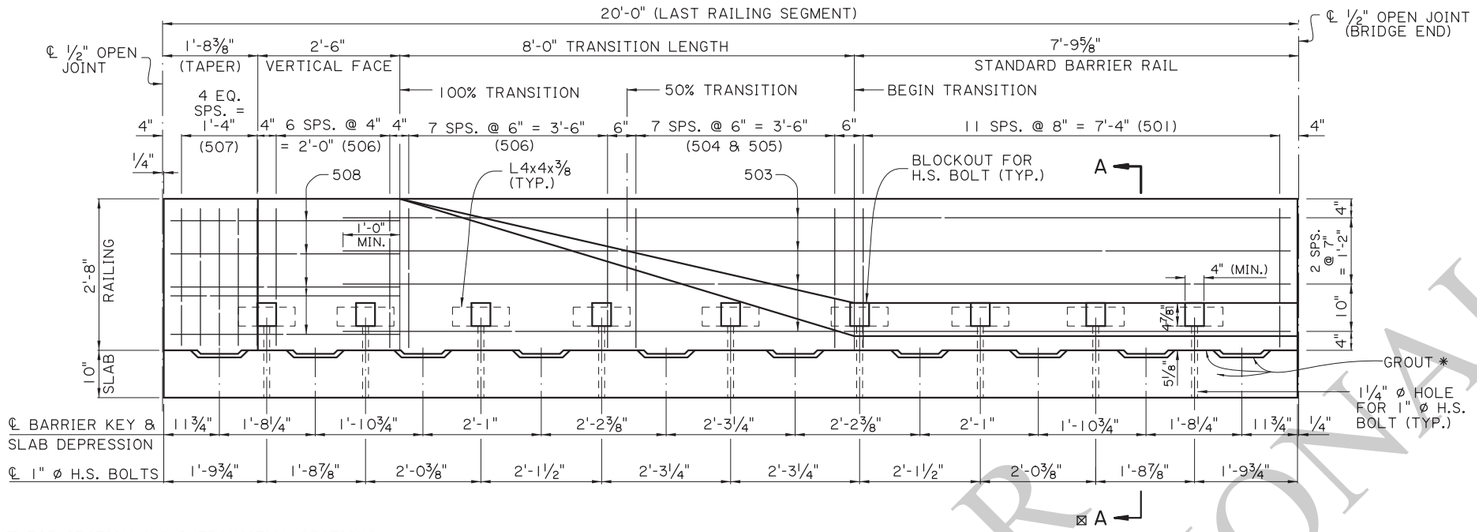

⊠ FOR SECTION A-A & TRANSITION SECTIONS SEE ALTERNATE SPAN (3 OF4)

PRECAST BARRIER RAILING TRANSITION ELEVATION

(SHOWING BARRIER RAILING AT END OF BRIDGE)
SCALE: ¾" = 1'-0"

* PLACE OR INJECT NON-SHRINK GROUT AS REQUIRED IN BETWEEN SLAB DEPRESSIONS TO FILL ALL VOIDS AND GAPS FOR FULL EVEN BEARING OF THE BARRIER ON THE SLAB. SEE NOTE 3, SHEET 9 OF 11.

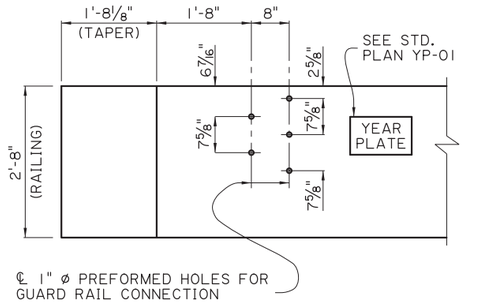

GUARD RAIL CONNECTION DETAIL

CONFORM TO GUARD RAIL STANDARD PLAN
SCALE: ¾" = 1'-0"

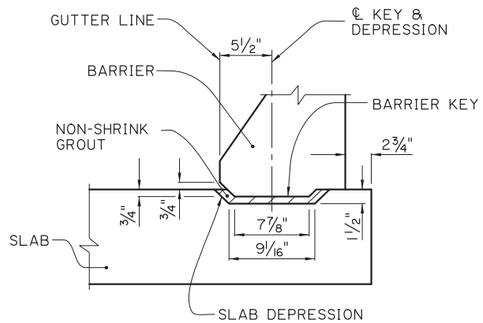

ELEVATION

SCALE: 1½" = 1'-0"

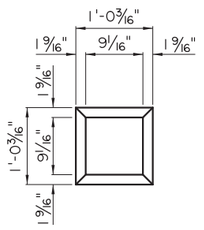

PLAN-DEPRESSION

SCALE: 1" = 1'-0"

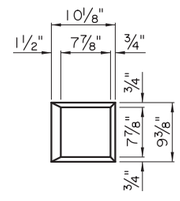

PLAN-KEY

SCALE: 1" = 1'-0"

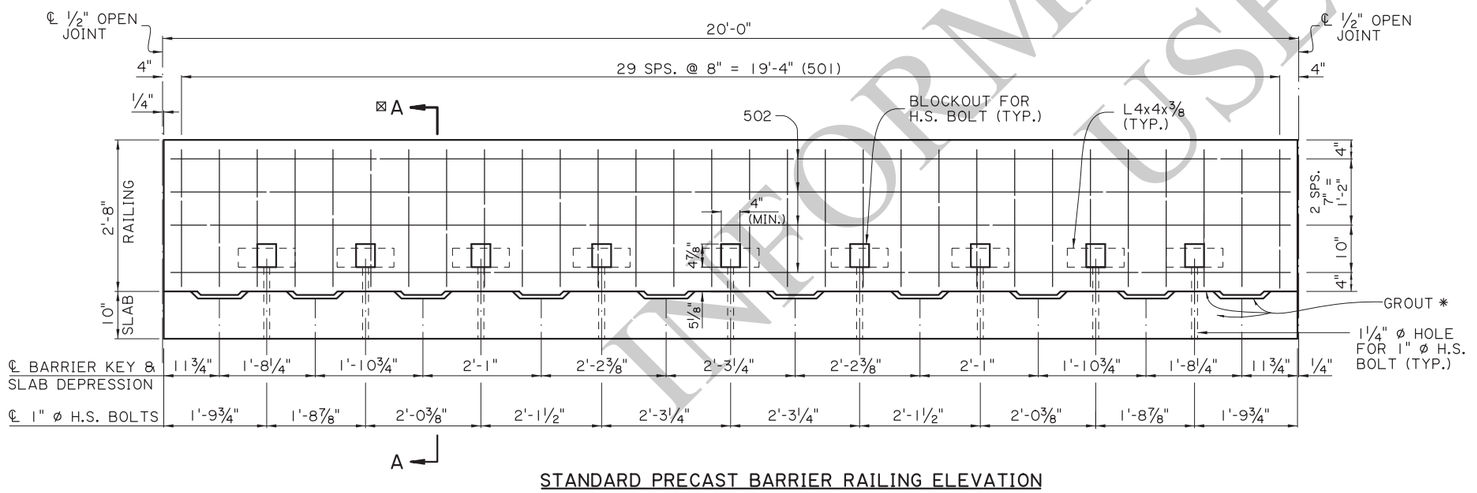

STANDARD PRECAST BARRIER RAILING ELEVATION

(SHOWING BARRIER RAILING ALONG BRIDGE SLAB)
SCALE: ¾" = 1'-0"

BARRIER KEY AND PANEL DEPRESSION DETAILS

FOR INFORMATIONAL USE

SHEET NUMBER

PARISH | CONTROL SECTION | STATE PROJECT

DESIGN B. DELATTE | CHECK J. NAKHLEH | DETAIL D. HYMEL | CHECK J. NAKHLEH | REVIEW | SERIES # 8 OF 11

APPROVED BY CHIEF ENGINEER: DATE: 12/10/2025

NO.	DATE	REVISION OR CHANGE ORDER DESCRIPTION	BY

ALTERNATE SPAN (2 OF 4)
20'-0" PRECAST CONC. BARRIER
24'-0" CLEAR ROADWAY
60° CROSSING TWO WAY TANGENT
PSS-60-24-20SL

DOTD LOUISIANA DEPARTMENT OF TRANSPORTATION & DEVELOPMENT

STANDARD PLAN

IP_PWP:d1246415\SS6024altspan2(LRFD).dgn
11/20/2025 16:1

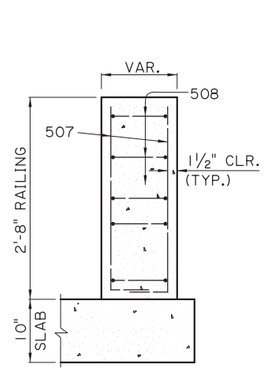

TAPER

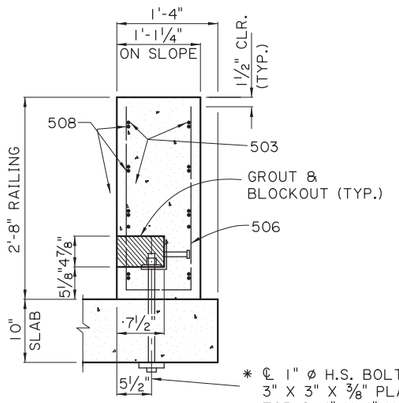

100% TRANSITION

* ℄ 1" ø H.S. BOLT, AND 3" X 3" X ⅜" PLATE WASHER TOP & 4" X 4" X ⅞" PLATE WASHER BOTTOM, AND ONE HEAVY HEX NUT (TYP.).

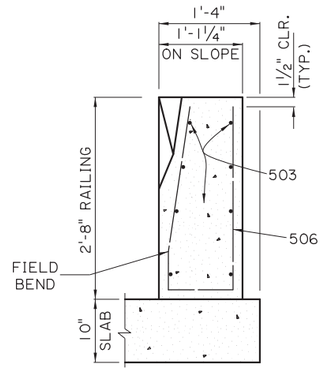

50% TRANSITION

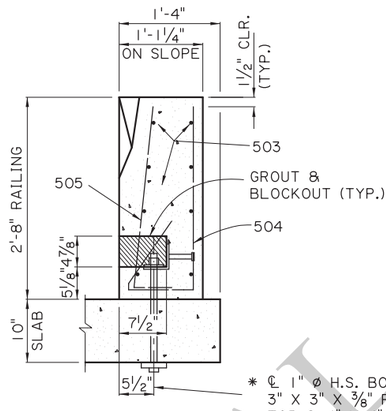

50% TRANSITION

* ℄ 1" ø H.S. BOLT, AND 3" X 3" X ⅜" PLATE WASHER TOP & 4" X 4" X ⅞" PLATE WASHER BOTTOM, AND ONE HEAVY HEX NUT (TYP.).

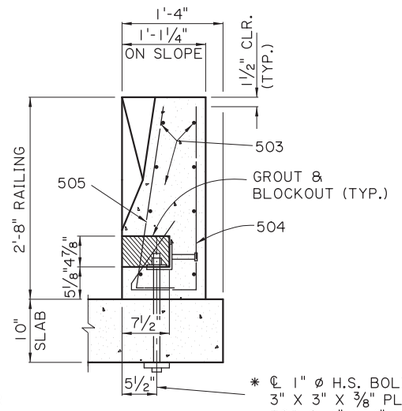

BEGIN TRANSITION

* ℄ 1" ø H.S. BOLT, AND 3" X 3" X ⅜" PLATE WASHER TOP & 4" X 4" X ⅞" PLATE WASHER BOTTOM, AND ONE HEAVY HEX NUT (TYP.).

BARRIER RAILING TRANSITION SECTIONS

SCALE: 1" = 1'-0"

* 1" ø THREADED STUD OF EQUAL STRENGTH, WITH 2 NUTS & 2 WASHERS, MAY BE USED IN LIEU OF H.S. BOLTS.

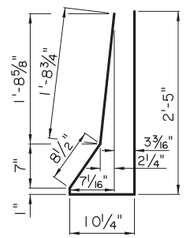

501
(2½" ø PIN)

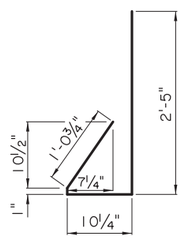

504
(2½" ø PIN)

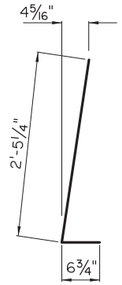

505
(2½" ø PIN)

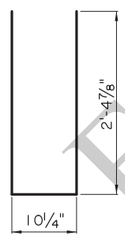

506
(2½" ø PIN)

507
(2½" ø PIN)

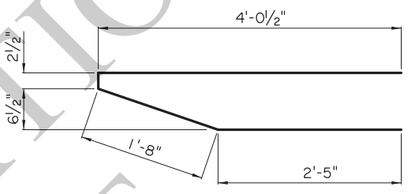

508
(2½" ø PIN)

NOTES:

1) ALL BARRIER RAIL SURFACES ARE TO RECEIVE A CLASS 3 SPECIAL SURFACE FINISH.

2) ALL SURFACES OF THE BLOCKOUTS EXCEPT THE BOTTOM MAY BE TAPERED AND ALL CORNERS MAY BE ROUNDED TO A RADIUS TO ALLOW FOR EASY REMOVAL OF PLUGS OR FORMS. AFTER PLACING AND TIGHTENING THE ANCHOR BOLTS, THE BLOCKOUTS SHALL BE FILLED WITH AN APPROVED NON-SHRINK GROUT FROM AML AND TROWELED TO THE REQUIRED FINISH AND TO THE SATISFACTION OF THE ENGINEER.

3) AFTER BARRIER IS PLACED AND ALIGNED, ALL GAPS UNDER BARRIER AND TOP OF SLAB SHALL BE FILLED WITH NON-SHRINK GROUT FROM AML AND ALLOWED TO SET PRIOR TO TIGHTENING OF BOLTS. IT IS IMPORTANT TO FILL ALL VOIDS AND GAPS UNDER THE BARRIER TO ENSURE EVEN BEARING ON DECK WHEN THE ANCHOR BOLTS ARE LOADED.

4) ALL 1" ø BOLTS SHALL BE HIGH STRENGTH A325 OR APPROVED EQUAL. BOLT, NUT & WASHER TO BE GALVANIZED AS PER ASTM A-153. BOLTS SHALL BE TENSIONED TO 36 KIPS, OR APPROXIMATELY 540 FOOT-LB. OF TORQUE (LUBRICATED CONNECTION).

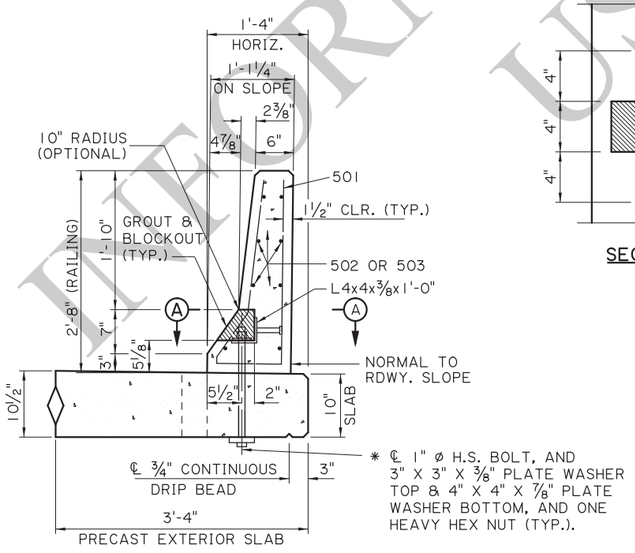

* ℄ 1" ø H.S. BOLT, AND 3" X 3" X ⅜" PLATE WASHER TOP & 4" X 4" X ⅞" PLATE WASHER BOTTOM, AND ONE HEAVY HEX NUT (TYP.).

SECTION A-A
SCALE: 1" = 1'-0"

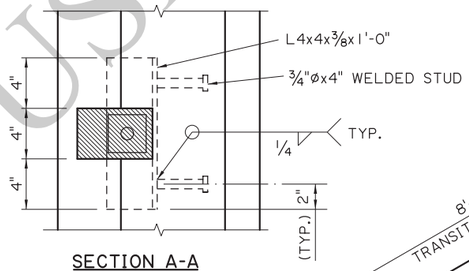

SECTION A-A

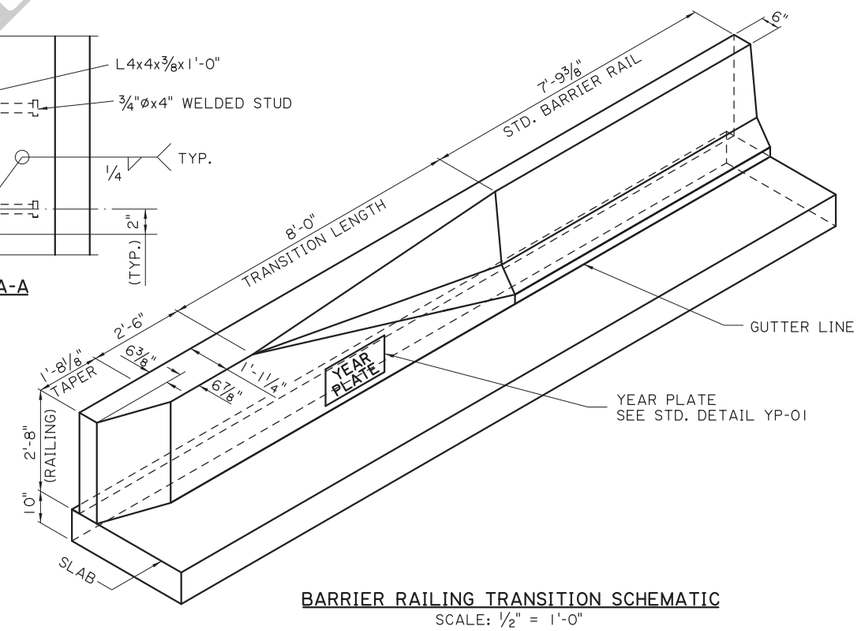

BARRIER RAILING TRANSITION SCHEMATIC
SCALE: ½" = 1'-0"

FOR INFORMATIONAL USE

SHEET NUMBER

PARISH | CONTROL SECTION | STATE PROJECT

DESIGN B. DELATTE | CHECK J. NAKHLEH | DETAIL D. HYMEL | CHECK J. NAKHLEH | REVIEW | SERIES # 9 OF 11

APPROVED BY CHIEF ENGINEER: DATE: 12/10/2025

REVISION OR CHANGE ORDER DESCRIPTION | BY | DATE | NO.

STATE OF LOUISIANA

ALTERNATE SPAN (3 OF 4)
20'-0" PRECAST CONC. BARRIER
24'-0" CLEAR ROADWAY
60° CROSSING TWO WAY TANGENT

PSS-60-24-20SL

DOTD LOUISIANA DEPARTMENT OF TRANSPORTATION & DEVELOPMENT

STANDARD PLAN

11/20/2025 16:1'
IP_PWP:d1246415\SS6024altspan3(LRFD).dgn

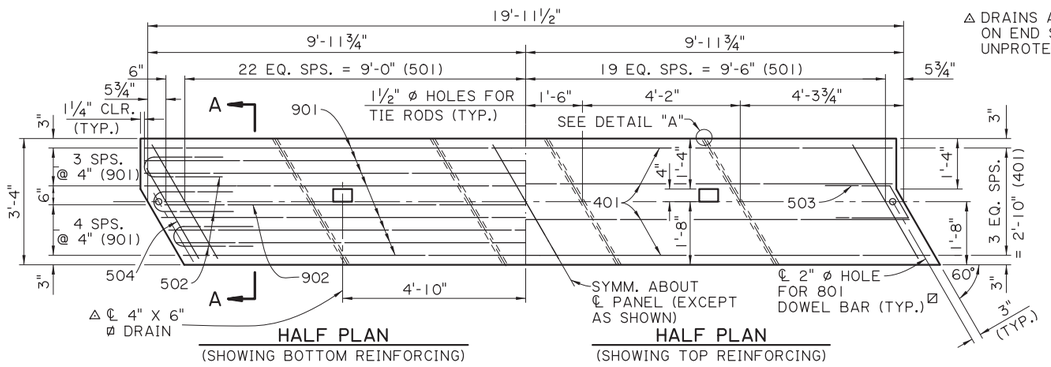

HALF PLAN
(SHOWING BOTTOM REINFORCING)

HALF PLAN
(SHOWING TOP REINFORCING)

△ DRAINS ARE NOT REQUIRED ON END SPANS OVER UNPROTECTED SLOPES.

EXTERIOR UNIT
SCALE ½" = 1'-0"

⊠ HOLES ARE OPTIONAL AT EXPANSION ENDS.

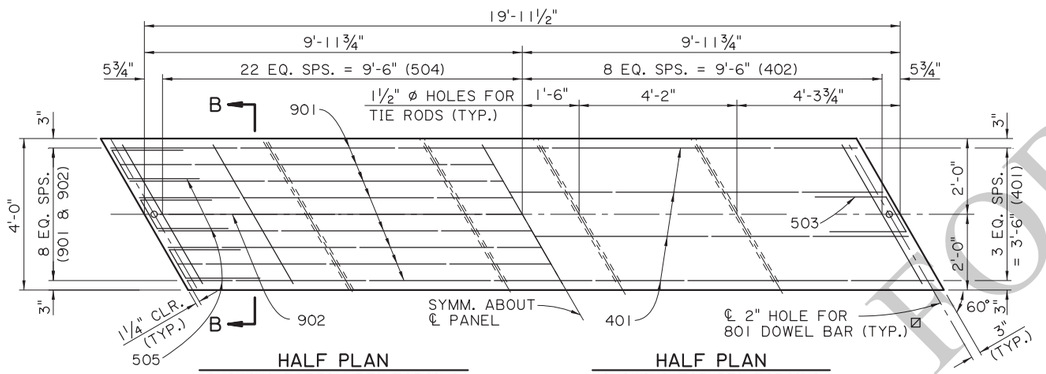

HALF PLAN
(SHOWING BOTTOM REINFORCING)

HALF PLAN
(SHOWING TOP REINFORCING)

INTERIOR UNIT
SCALE ½" = 1'-0"

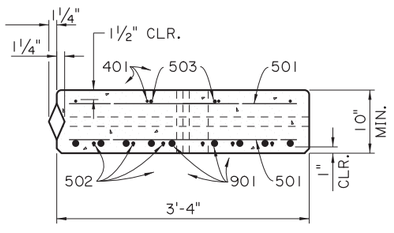

SECTION A-A
EXTERIOR UNIT
SCALE 1" = 1'-0"

NOTE:
FOR EACH SPAN. ONE EXTERIOR UNIT WILL HAVE A TONGUE AND ONE WILL HAVE A GROOVE.

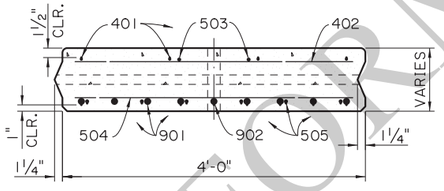

SECTION B-B
INTERIOR UNIT
SCALE 1" = 1'-0"

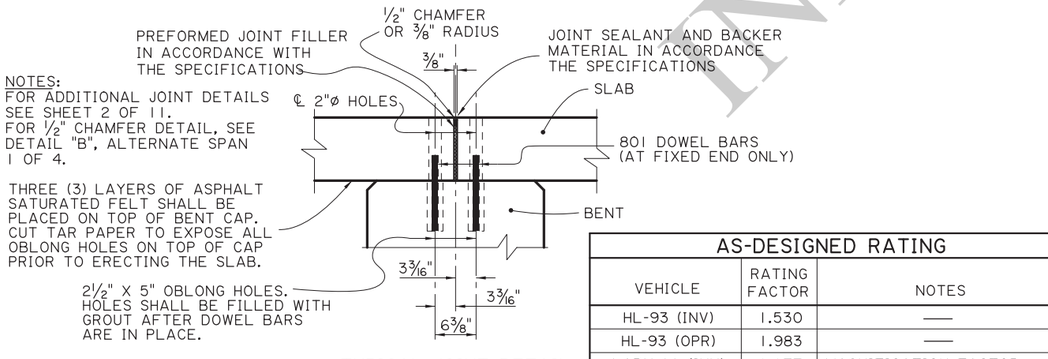

NOTES:
FOR ADDITIONAL JOINT DETAILS SEE SHEET 2 OF 11.
FOR ½" CHAMFER DETAIL, SEE DETAIL "B", ALTERNATE SPAN 1 OF 4.

TYPICAL JOINT DETAIL
SCALE 1" = 1'-0"

AS-DESIGNED RATING		
VEHICLE	RATING FACTOR	NOTES
HL-93 (INV)	1.530	——
HL-93 (OPR)	1.983	——
LADV-11 (INV)	1.177	MAGNIFICATION FACTOR = 1.3

ALTERNATE SPAN NOTES:

DESIGN SPECIFICATIONS: AASHTO LRFD BRIDGE DESIGN SPECIFICATIONS, 4th EDITION, WITH 2008 & 2009 INTERIMS.

DESIGN LOAD: THE BRIDGE DECK IS DESIGNED FOR A FUTURE WEARING COURSE OF 19 PSF. THE LIVE LOAD IS HL-93, AND LADV-11 (LOUISIANA SPECIAL DESIGN VEHICLE LIVE LOAD 2011).

STRUCTURAL CONCRETE: ALL CONCRETE SHALL BE CLASS P1. THE BRIDGE RAIL CONCRETE SHALL BE CLASS A1 IF RAIL IS CAST IN PLACE. STEEL SIDE FORMS AND STEEL OR CONCRETE BOTTOM FORMS SHALL BE USED FOR PRECAST COMPONENTS. EXPOSED EDGES SHALL HAVE A ¾" CHAMFER, UNLESS SPECIFIED OTHERWISE. ALL SURFACES SHALL RECEIVE A CLASS 1 ORDINARY SURFACE FINISH UPON REMOVAL OF THE FORMS. THE FINAL FINISH SHALL BE A TINE FINSIH IN ACCORDANCE WITH THE SPECIFICATIONS.

REINFORCING STEEL: ALL REINFORCING STEEL SHALL BE GRADE 60. DIMENSIONS RELATING TO FABRICATION ARE OUT TO OUT OF BARS, UNLESS SPECIFIED OTHERWISE. DIMENSIONS RELATING TO SPACING ARE TO BAR CENTERS, UNLESS SPECIFIED OTHERWISE. ALL REINFORCING BARS SHALL BE PLACED TO PROVIDE A MINIMUMUM COVER OF 1" FROM THE DRAIN HOLES. REINFORCING STEEL MAY BE TACK WELDED FOR A DISTANCE OF NOT MORE THAN 4'-0" FROM EACH END OF UNIT. NO OTHER WELDING SHALL BE PERMITTED.

MISCELLANEOUS STEEL: HIGH STRENGTH BOLTS SHALL CONFORM TO ASTM DESIGNATION A-325. PRESTRESSING STRANDS SHALL CONFORM TO ASTM DESIGNATION A-416, GRADE 270. PLATES, TIE RODS, AND DRIFT BOLTS SHALL CONFORM TO ASTM DESIGNATION A709, GRADE 36. STEEL SPECIFIED TO BE ZINC COATED SHALL BE IN CONFORMANCE WITH ASTM DESIGNATION A-123.

GROUT: THE GROUT SHALL BE AN APPROVED FLOWABLE NON-SHRINK GROUT LISTED ON AML. THE GROUT SHALL BE TESTED FOR ACCEPTANCE PRIOR TO USAGE. THE GROUT SHALL ATTAIN A MINIMUM COMPRESSIVE STRENGTH OF 3500 PSI PRIOR TO LOADING SLABS. SURFACES SHALL BE THOROUGHLY SATURATED WITH WATER BY FLOODING THE HOLES FOR APPROXIMATELY FIVE (5) MINUTES IMMEDIATELY BEFORE THE GROUT IS PLACED. ONLY POTABLE WATER SHALL BE USED FOR SATURATION AND MIXING PURPOSES.

PATCHING MATERIAL: THE PATCHING MATERIAL SHALL BE AN APPROVED PATCHING MATERIAL FOR PRECAST OR PRESTREESED CONCRETE PRODUCTS LISTED ON AML. SURFACE PREPARATION, MIXING AND PLACMENT SHALL BE IN ACCORDANCE WITH THE MANUFACTURERS' RECOMMENDATIONS. ONLY POTABLE WATER SHALL BE USED FOR SATURATION AND MIXING PURPOSES.

PRECAST UNITS: THE PLANS FOR AN ONGOING OPERATION OF FABRICATION FACILITIES SHALL BE APPROVED BY THE DEPARTMENT. EACH UNIT SHALL HAVE "LIVE LOAD HL-93 AND LADV-11", THE FABRICATOR'S MARK, AND UNIQUE NUMBER, MEETING THE APPROVAL OF THE ENGINEER STAMPED OR INSCRIBED IN THE PLASTIC CONCRETE. PRECAST UNITS MAY BE CAST WITH OR WITHOUT CAMBER. IF CAMBER IS PROVIDED IT SHALL NOT EXCEED ¼" AT THE CENTERLINE OF SPAN. ALL UNITS SHALL BE HELD AT THE PLANT FOR A MINIMUM OF TEN(10) DAYS AFTER CASTING. THE CONCRETE SHALL REACH A MINIMUM STRENGTH OF 3,000 PSI BEFORE HANDLING IS PERMITTED. THE LIFTING INSERTS SHALL BE 1", TYPE S INSERTS AS MANUFACTURED BY DAYTON-SUPERIOR CORPORATION OR AN APPROVED EQUAL. EACH INSERT SHALL HAVE A MINIMUM LOAD CAPACITY OF 10,000 POUNDS . FOUR(4) INSERTS WITH 1" ø X 5" LONG COIL BOLTS SHALL BE PLACED IN THE TOP OF THE UNIT AND LOCATED 1'-3" FROM ITS ENDS AND 1'-0" FROM ITS EDGES. INSERT HOLES SHALL BE GROUT FILLED AFTER PLACEMENT OF UNIT. AT THE CONTRACTOR'S OPTION A SLING OF SUFFICIENT CAPACITY MAY BE USED FOR LIFTING, PROVIDED THE SAME PICKUP LOCATION FROM THE ENDS ARE USED. FABRICATION TOLERANCES SHALL BE AS FOLLOWS:

UNIT DEPTH	± 3⁄16"
UNIT LENGTH	+ ⅛" AND -½"
OVERALL SPAN WIDTH	± 2"

ALL PRECAST UNITS IN EACH BRIDGE SPAN SHALL BE MATCH CAST IN THE SAME CASTING BED TO ENSURE A PROPER FIT DURING INSTALLATION.

GUARDRAIL: CONFORM TO PROJECT PLANS AND GUARD RAIL STANDARD PLANS.

PAYMENT: ALL WORK WILL BE PAID FOR UNDER THE DESIGNATED BRIDGE SUPERSTRUCTURE AND SUBSTRUCTURE PAY ITEM AND IN ACCORDANCE WITH THE SPECIFICATIONS.

ESTIMATED QUANTITIES (ONE EXTERIOR UNIT)				
BAR	NO.	UNIT LENGTH	TOTAL LENGTH	LOCATION
901	8	19'-9"	158'-0"	LONGIT. BOT. OF SLAB
902	1	19'-1"	19'-1"	LONGIT. BOT. OF SLAB
TOTAL NO. 9 BARS = 177'-1" = 602 LBS.				
801	1	1'-0"	1'-0"	DOWELS
TOTAL NO. 8 BARS = 1'-0" = 3 LBS.				
501	84	3'-5"	287'-0"	TRANS. TOP & BOT. OF SLAB
502	6	4'-6"	27'-0"	BOT. END OF SLAB
503	2	4'-9"	9'-6"	TOP END OF SLAB
504	2	2'-8"	5'-4"	TRANS. TOP & BOT. OF SLAB
TOTAL NO. 5 BARS = 328'-10" = 343 LBS.				
401	4	19'-9"	79'-0"	LONGIT. TOP OF SLAB
TOTAL NO. 4 BARS = 79'-0" = 53 LBS.				
DEFORMED REINFORCING STEEL = 1001 LBS.				
⊙ CLASS P1 CONCRETE = 2.05 CU. YDS.				
CONCRETE RAILING (PER SPAN) = 40.00 LIN. FT.				

ESTIMATED QUANTITIES (ONE INTERIOR UNIT)				
BAR	NO.	UNIT LENGTH	TOTAL LENGTH	LOCATION
901	8	19'-9"	158'-0"	LONGIT. BOT. OF SLAB
902	1	19'-1"	19'-1"	LONGIT. BOT. OF SLAB
TOTAL NO. 9 BARS = 177'-1" = 602 LBS.				
801	1	1'-0"	1'-0"	DOWELS
TOTAL NO. 8 BARS = 1'-0" = 3 LBS.				
503	2	4'-9"	9'-6"	TOP END OF SLAB
504	45	4'-2"	187'-6"	TRANS. BOT. OF SLAB
505	6	4'-7"	27'-6"	BOT. END OF SLAB
TOTAL NO. 5 BARS = 224'-6" = 235 LBS.				
401	4	19'-9"	79'-0"	LONGIT. TOP OF SLAB
402	17	4'-2"	70'-10"	TRANS. TOP OF SLAB
TOTAL NO. 4 BARS = 149'-10" = 100 LBS.				
DEFORMED REINFORCING STEEL = 940 LBS.				
⊙ CLASS P1 CONCRETE = 2.46 CU. YDS.				

⊙ BASED ON A 10" SLAB THICKNESS

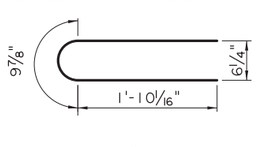

502
5 " ø PIN

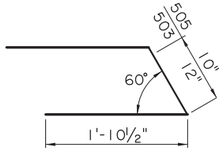

503 & 505
2½" ø PIN

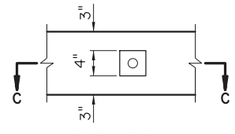

END VIEW

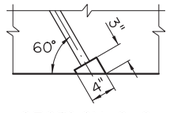

SECTION C-C

DETAIL "A"
TYP. EXTERIOUR EDGE ONLY
SCALE 1" = 1'-0"

SHEET NUMBER

PARISH | CONTROL SECTION | STATE PROJECT

DESIGN J. NAKHLEH | DETAIL D. HYMEL | REVIEW J. NAKHLEH | SERIES # 10 OF 11
CHECK B. DELATTE | CHECK J. NAKHLEH

APPROVED BY CHIEF ENGINEER:
DATE: 12/10/2025

NO.	DATE	REVISION OR CHANGE ORDER DESCRIPTION	BY

STATE OF LOUISIANA
DEPARTMENT OF TRANSPORTATION AND DEVELOPMENT

ALTERNATE SPAN (4 OF 4)
20'-0" PRECAST CONC.SLAB UNIT
24'-0" CLEAR ROADWAY
60° CROSSING TWO WAY TANGENT

PSS-60-24-20SL

DOTD
LOUISIANA DEPARTMENT OF TRANSPORTATION & DEVELOPMENT

STANDARD PLAN

INFORMATIONAL ONLY

11/25/2025 08:5
IP_PWP:d1246415\SS6024altspan4(LRFD).dgn

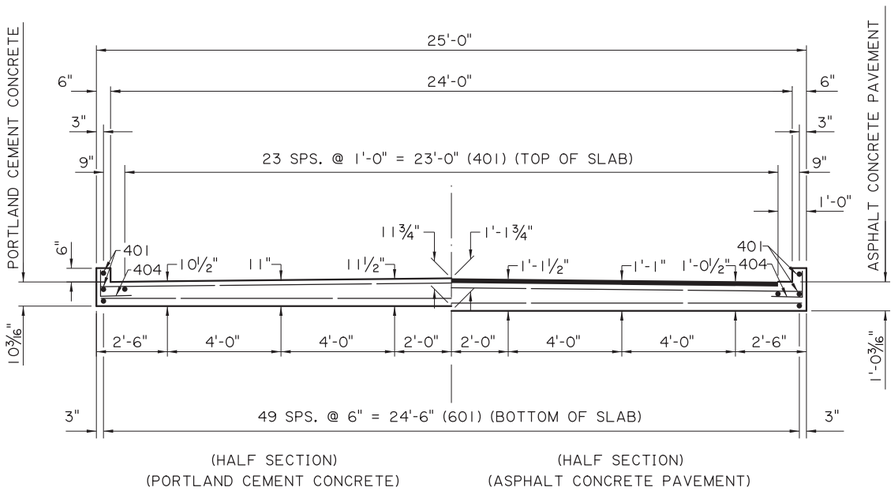

SECTION A-A
SCALE ⅜" = 1'-0"

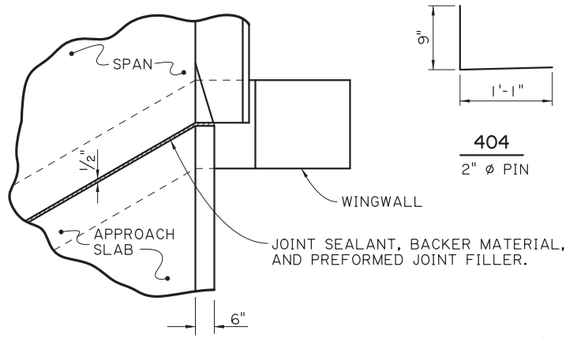

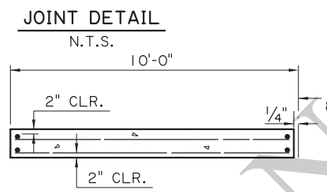

JOINT DETAIL
N.T.S.

(FOR PORTLAND CEMENT CONCRETE ROADWAY PAVEMENT)

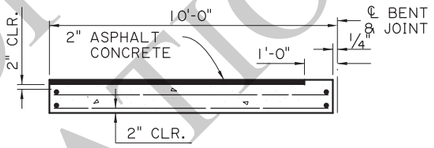

(FOR ASPHALT CONCRETE ROADWAY PAVEMENT)

SECTION ALONG ℄ ROADWAY
SCALE : ¼" = 1'-0"

ESTIMATED QUANTITIES (ONE SLAB)				
BAR	NO.	UNIT LENGTH	TOTAL LENGTH	LOCATION
801	6	1'-0"	6'-0"	DOWELS
TOTAL NO. 8 BARS = 6'-0" = 16 LBS.				
601	50	9'-7"	479'-2"	LONGIT. BOT. OF SLAB
602	20	28'-2"	563'-4"	TRANSV. BOT. OF SLAB
TOTAL NO. 6 BARS = 1,042'-6" = 1,566 LBS.				
401	28	9'-7"	268'-4"	LONGIT. TOP OF SLAB & CURB
402	2	28'-2"	56'-4"	TRANSV. TOP OF SLAB
403	9	28'-5"	255'-9"	TRANSV. TOP OF SLAB
404	14	1'-10"	25'-8"	DOWELS IN CURB
TOTAL NO. 4 BARS = 606'-1" = 405 LBS.				
⊙ TOTAL DEFORMED REINFORCING STEEL= 1,987 LBS.				
CONCRETE APPROACH SLAB = 27.78 SQ. YDS.				
☒ ⊙ ASPHALT CONCRETE = 2.5 TONS				
☒ ⊙ SAW CUT & SEAL = 27 LIN. FT.				

⊙ TO BE PAID FOR UNDER ITEM CONCRETE APPROACH SLABS.
☒ REQUIRED WHEN APPROACH SLAB IS ADJACENT TO ASPHALT CONCRETE PAVEMENT.

APPROACH SLAB NOTES:

DESIGN SPECIFICATIONS: AASHTO LRFD BRIDGE DESIGN SPECIFICATIONS, 4th EDITION, WITH 2008 & 2009 INTERIMS.

STRUCTURAL CONCRETE: ALL CONCRETE SHALL BE CLASS A1. EXPOSED EDGES SHALL HAVE A ¾" CHAMFER, UNLESS SPECIFIED OTHERWISE.

REINFORCING STEEL: ALL REINFORCING STEEL SHALL BE GRADE 60. DIMENSIONS RELATING TO THE FABRICATION ARE OUT-TO-OUT OF BARS, UNLESS SPECIFIED OTHERWISE. DIMENSIONS RELATING TO SPACING ARE TO BAR CENTERS, UNLESS SPECIFIED OTHERWISE.

BEDDING MATERIAL: FOR DETAILS OF BEDDING MATERIAL AND UNDERDRAINS SEE APPROACH SLAB STANDARD DETAILS.

SAWING & SEALING: THE ASPHALT CONCRETE SHALL BE SAW CUT AT THE END OF THE CONCRETE APPROACH SLAB THE ENTIRE ROADWAY WIDTH AND SEALED WHICH WILL BE PAID FOR UNDER THE DESIGNATED ROADWAY PAY ITEM.

PAYMENT: ALL OTHER WORK WILL BE PAID FOR UNDER THE DESIGNATED BRIDGE CONCRETE APPROACH SLAB PAY ITEM AND IN ACCORDANCE WITH THE SPECIFICATIONS.

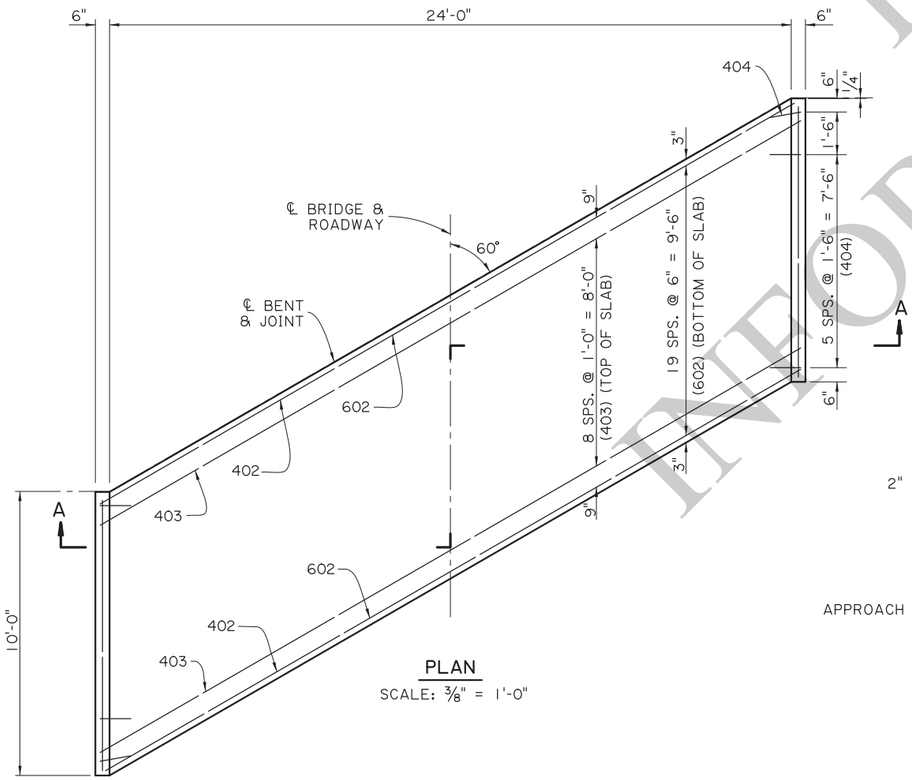

PLAN
SCALE: ⅜" = 1'-0"

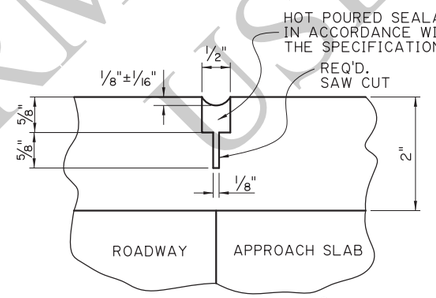

SAWING & SEALING JOINT DETAIL ⊙
N.T.S.

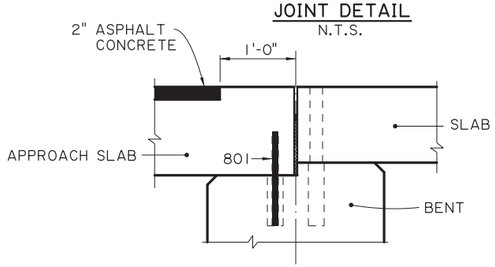

DETAIL A
SCALE : 1" = 1'-0"
(ASPHALT CONCRETE PAVEMENT OPTION)

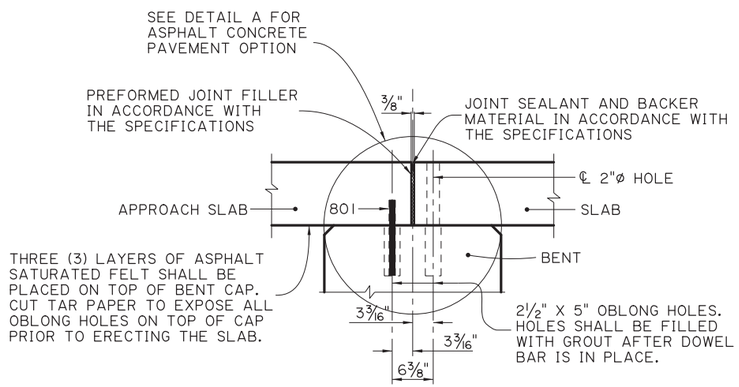

TYPICAL JOINT DETAIL
SCALE : 1" = 1'-0"

NOTE: FOR ADDITIONAL JOINT DETAILS SEE SHEET 2 OF 11

FOR INFORMATIONAL USE

SHEET NUMBER

PARISH	CONTROL SECTION	STATE PROJECT

DESIGN B. DELATTE / CHECK J. NAKHLEH
DETAIL D. HYMEL / CHECK J. NAKHLEH
REVIEW / SERIES # 11 OF 11

APPROVED BY CHIEF ENGINEER:
DATE: 12/10/2025

NO.	DATE	REVISION OR CHANGE ORDER DESCRIPTION	BY

ALTERNATE APPROACH SLAB
10'-0" CAST-IN-PLACE
24'-0" CLEAR ROADWAY
60° CROSSING TWO WAY TANGENT

DOTD LOUISIANA DEPARTMENT OF TRANSPORTATION & DEVELOPMENT

STANDARD PLAN

IP_PWP:d1246415\SS6024altaprslab(LRFD).dgn
11/25/2025 08:5

11/25/2025 09:3:

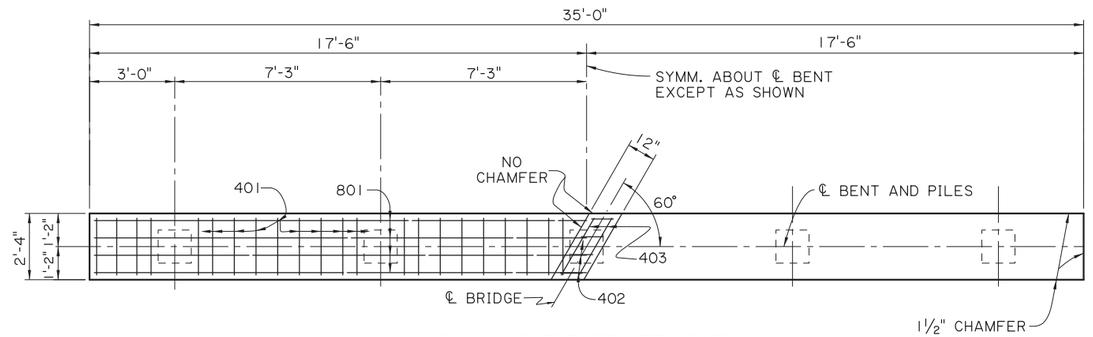

PLAN - INTERMEDIATE BENT

SCALE: 3/8" = 1'-0"

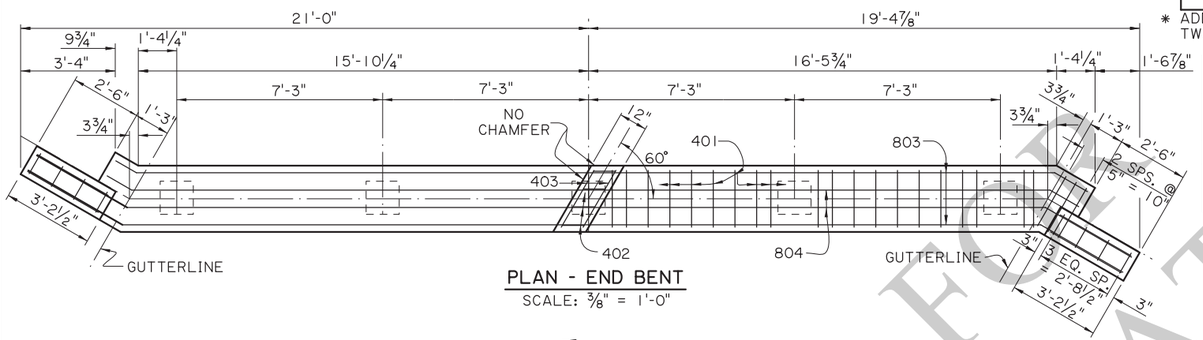

PLAN - END BENT

SCALE: 3/8" = 1'-0"

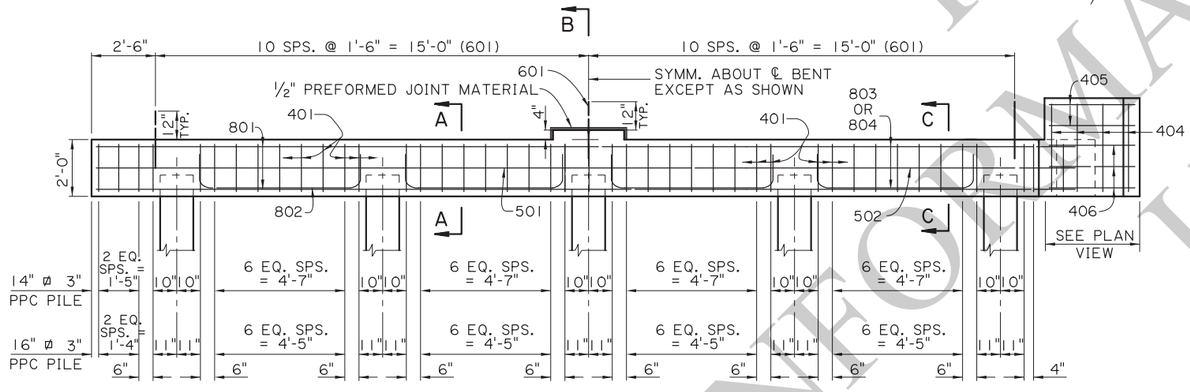

HALF ELEVATION - INTERMEDIATE BENT

SCALE: 3/8" = 1'-0"

B

HALF ELEVATION - END BENT

SCALE: 3/8" = 1'-0"

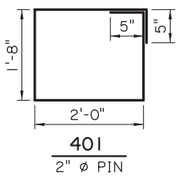

401
2" ø PIN

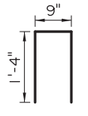

402
2" ø PIN

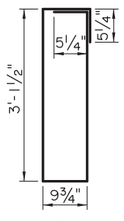

404
2" ø PIN

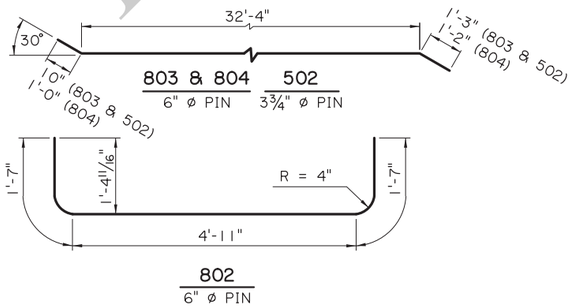

802
6" ø PIN

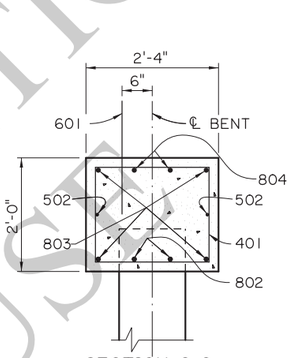

SECTION C-C

SCALE: 3/4" = 1'-0"

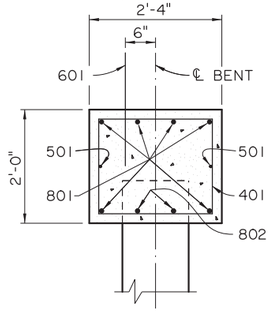

SECTION A-A

SCALE: 3/4" = 1'-0"

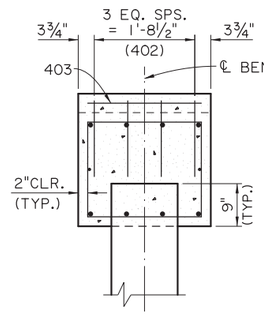

SECTION B-B

SCALE: 3/4" = 1'-0"

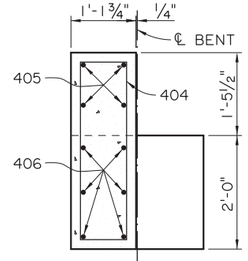

END ELEVATION

SCALE: 3/4" = 1'-0"

ESTIMATED QUANTITIES (ONE INTER. BENT)

BAR	NO.	UNIT LENGTH	TOTAL LENGTH	LOCATION
801	6	34'-8"	208'-0"	LONGIT. IN CAP
802	8	8'-1"	64'-8"	LONGIT. IN CAP
TOTAL NO. 8 BARS = 272'-8" = 728 LBS.				
601	21	2'-0"	42'-0"	DOWELS
TOTAL NO. 6 BARS = 42'-0" = 63 LBS.				
501	2	34'-8"	69'-4"	LONGIT. IN CAP
TOTAL NO. 5 BARS = 69'-4" = 72 LBS.				
401	44	8'-2"	359'-4"	STIRRUPS IN CAP
402	4	3'-5"	13'-8"	STIRRUPS IN RISER
403	2	2'-3"	4'-6"	LONGIT. IN RISER
TOTAL NO. 4 BARS = 377'-6" = 252 LBS.				

* TOTAL DEFORMED REINFORCING STEEL = 1115 LBS.

⊖ CLASS A1 CONCRETE = 5.84 CU. YDS.

MAX. PILE LOAD: SERVICE DEAD LOAD = 22 TONS
SERVICE LIVE LOAD = 30 TONS
FACTORED TOTAL LOAD = 72 TONS

* ADD 63 LBS. OF REINFORCING STEEL (21-601 DOWELS) WHEN TWO FIXED ENDS OCCUR ON THE SAME BENT. ⊖

AS-DESIGNED RATING

VEHICLE	RATING FACTOR	NOTES
HL-93 (INV)	1.750	———
HL-93 (OPR)	2.268	———
LADV-11 (INV)	1.346	MAGNIFICATION FACTOR = 1.3

ESTIMATED QUANTITIES (ONE END BENT)

BAR	NO.	UNIT LENGTH	TOTAL LENGTH	LOCATION
802	6	8'-1"	64'-8"	LONGIT. IN CAP
803	4	34'-5"	137'-8"	LONGIT. IN CAP
804	2	34'-6"	69'-0"	LONGIT. IN CAP
TOTAL NO. 8 BARS = 271'-4" = 724 LBS.				
601	21	2'-0"	42'-0"	DOWELS
TOTAL NO. 6 BARS = 42'-0" = 63 LBS.				
502	2	34'-5"	68'-10"	LONGIT. IN CAP
TOTAL NO. 5 BARS = 68'-10" = 72 LBS.				
401	46	8'-2"	375'-8"	STIRRUPS IN CAP
402	4	3'-5"	13'-8"	STIRRUPS IN RISER
403	2	2'-3"	4'-6"	LONGIT. IN RISER
404	8	8'-9"	70'-0"	STIRRUPS IN WINGWALL
405	8	2'-10"	22'-8"	LONGIT. IN WINGWALL
406	12	4'-0"	48'-0"	LONGIT. IN WINGWALL
TOTAL NO. 4 BARS = 534'-6" = 357 LBS.				

TOTAL DEFORMED REINFORCING STEEL = 1216 LBS.

CLASS A1 CONCRETE = 6.63 CU. YDS.

MAX. PILE LOAD: SERVICE DEAD LOAD = 22 TONS
SERVICE LIVE LOAD = 30 TONS
FACTORED TOTAL LOAD = 72 TONS

⊖ 16" ø PPC PILES USED FOR ESTIMATING PURPOSES ONLY. (ADD 0.06 CU. YDS. OF CLASS A1 CONCRETE PER BENT WHEN 14" ø PPC PILES ARE USED.)

NOTES:

DESIGN SPECIFICATIONS: AASHTO LRFD BRIDGE DESIGN SPECIFICATIONS, 4th EDITION, WITH 2008 & 2009 INTERIMS.

DESIGN LOAD: LIVE LOAD IS HL-93, AND LADV-11 (LOUISIANA DESIGN VEHICLE LIVE LOAD 2011).

STRUCTURAL CONCRETE: ALL CONCRETE SHALL BE CLASS A1. EXPOSED EDGES SHALL HAVE A ¾" CHAMFER UNLESS SPECIFIED OTHERWISE. ALL EXPOSED FACES OF WINGWALLS AND ENDS OF CAPS SHALL RECEIVE A SURFACE FINISH AS PER THE SPECIFICATIONS UNLESS SPECIFIED OTHERWISE.

REINFORCING STEEL: ALL REINFORCING SHALL BE GRADE 60. DIMENSIONS RELATING TO FABRICATION ARE OUT TO OUT OF BARS, UNLESS SPECIFIED OTHERWISE. DIMENSIONS RELATING TO SPACING ARE TO BAR CENTERS, UNLESS SPECIFIED OTHERWISE. DOWELS (601 BARS) SHALL BE PROVIDED AT ALL FIXED BEARINGS AND APPROACH SLAB BEARINGS. ALL EXPOSED END OF DOWELS SHALL BE WRAPPED WITH TWO LAYERS OF 15 LB. ASPHALT SATURATED FELT. CLOSE FITTING TUBES OF COMPRESSIBLE MATERIAL NOT LESS THAN 3/16" THICK MAY BE SUBSTITUTED.

PRECAST CONCRETE PILES: CONFORM TO PILE STANDARD PLAN AND PROJECT PLANS FOR FABRICATION AND INSTALLATION. PILES WILL BE PAID FOR UNDER THE DESIGNATED PILE PAY ITEMS.

PREFORMED JOINT MATERIAL: PREFORMED JOINT MATERIAL SHALL BE IN ACCORDANCE WITH THE SPECIFICATIONS.

PAYMENT: ALL OTHER WORK WILL BE PAID FOR UNDER THE DESIGNATED BRIDGE SUPERSTRUCTURE AND SUBSTRUCTURE PAY ITEM AND IN ACCORDANCE WITH THE SPECIFICATIONS.

FOR INFORMATIONAL USE

SHEET NUMBER

PARISH | CONTROL SECTION | STATE PROJECT

DESIGN J. NAKHLEH | CHECK K. WASCOM | DETAIL D. HYMEL | CHECK J. NAKHLEH | REVIEW | SERIES # 1 OF 11

APPROVED BY CHIEF ENGINEER: DATE: 12/10/2025

NO. | DATE | REVISION OR CHANGE ORDER DESCRIPTION | BY

BENTS
REINFORCED CONCRETE PILE BENTS
28'-0" CLEAR ROADWAY
60° CROSSING TWO WAY TANGENT

PSS-60-28-20SL

DOTD
LOUISIANA DEPARTMENT OF TRANSPORTATION & DEVELOPMENT

STANDARD PLAN

IP_PWP:d1246416\SS6028bent(LRFD).dgn

11/25/2025 09:41

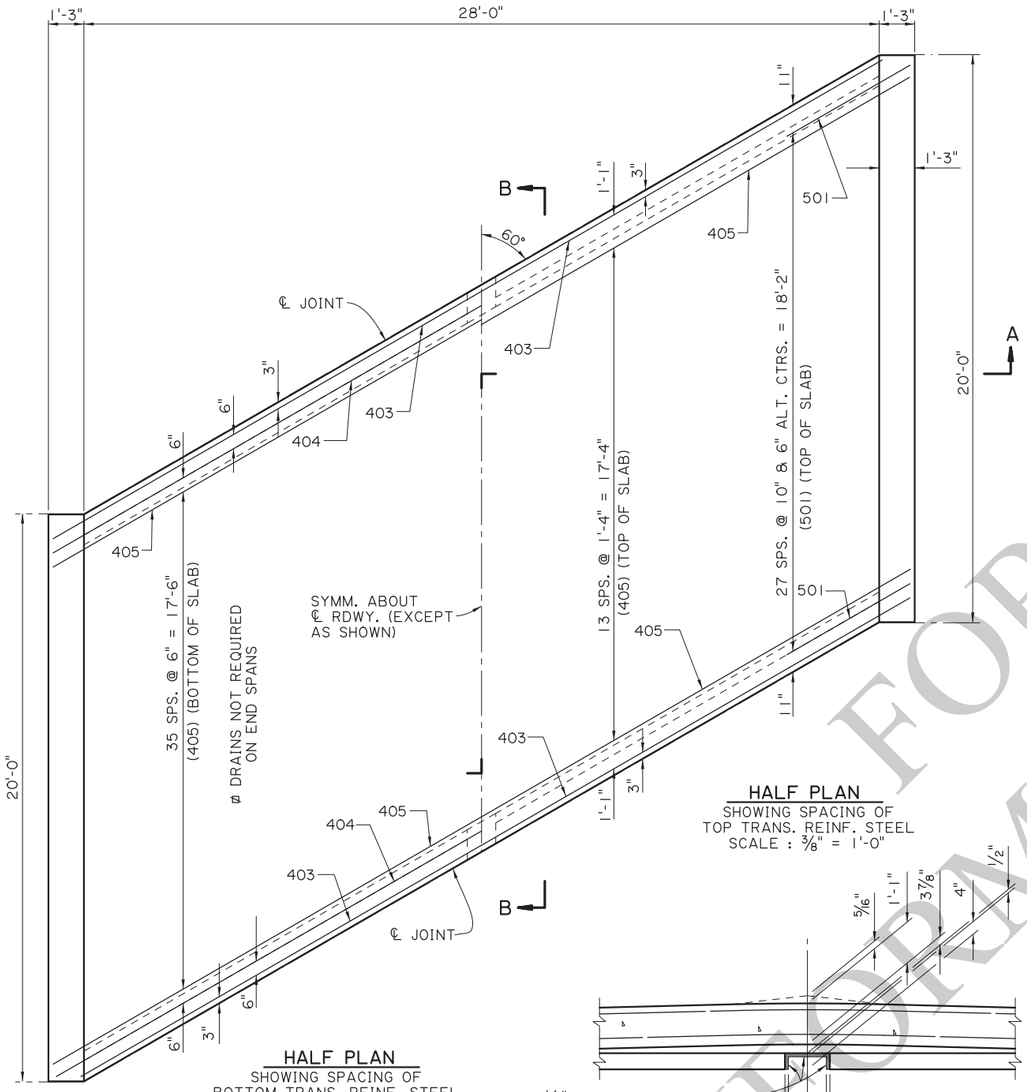

HALF PLAN
SHOWING SPACING OF BOTTOM TRANS. REINF. STEEL
SCALE : ⅜" = 1'-0"

HALF PLAN
SHOWING SPACING OF TOP TRANS. REINF. STEEL
SCALE : ⅜" = 1'-0"

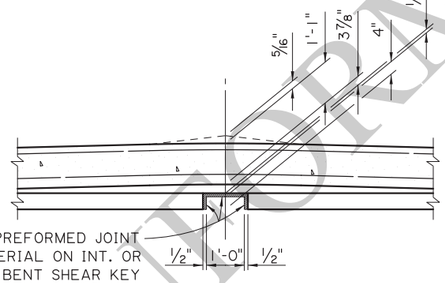

DETAIL B
SCALE : ½" = 1'-0"

SPAN NOTES:

DESIGN SPECIFICATIONS:
AASHTO LRFD BRIDGE DESIGN SPECIFICATIONS, 4th EDITION. WITH 2008 & 2009 INTERIMS.

DESIGN LOADS:
THE BRIDGE DECK IS DESIGNED FOR A FUTURE WEARING COURSE OF 19 PSF. THE LIVE LOAD IS HL-93, AND LADV-11 (LOUISIANA DESIGN VEHICLE LIVE LOAD 2011).

STRUCTURAL CONCRETE:
ALL CONCRETE SHALL BE CLASS A1. EXPOSED EDGES SHALL HAVE A ¾" CHAMFER UNLESS SPECIFIED OTHERWISE. ALL BARRIER RAIL SURFACES ARE TO RECEIVE A CLASS 3 SPECIAL SURFACE FINISH.

REINFORCING STEEL:
ALL REINFORCING SHALL BE GRADE 60; DIMENSIONS RELATING TO SPACING ARE TO BAR CENTERS, DIMENSIONS RELATING TO FABRICATION ARE OUT TO OUT OF BARS, UNLESS SPECIFIED OTHERWISE. ALL REINFORCING BARS SHALL BE PLACED TO PROVIDE A MINIMUM COVER OF ONE INCH FROM THE SURFACE OF THE DRAIN HOLES TO THE FACE OF THE BARS.

GUARD RAIL:
CONFORM TO PROJECT PLANS AND GUARD RAIL STANDARD PLANS.

PAYMENT:
ALL WORK WILL BE PAID FOR UNDER THE DESIGNATED BRIDGE SUPERSTRUCTURE AND SUBSTRUCTURE PAY ITEM AND IN ACCORDANCE WITH THE SPECIFICATIONS.

ESTIMATED QUANTITIES (ONE SPAN)				
BAR	NO.	UNIT LENGTH	TOTAL LENGTH	LOCATION
801	63	19'-6"	1228'-6"	LONGIT. BOT. OF SLAB
802	8	19'-7"	156'-8"	LONGIT. BOT. OF SLAB
TOTAL NO. 8 BARS = 1385'-2" = 3699 LBS.				
501	56	5'-0"	280'-0"	TRANS. TOP OF SLAB
TOTAL NO. 5 BARS = 280'-0" = 292 LBS.				
401	21	19'-6"	409'-6"	LONGIT. TOP OF SLAB
402	4	19'-7"	78'-4"	LONGIT. TOP OF SLAB
403	4	33'-8"	134'-8"	TRANS. TOP & BOT. OF SLAB
404	2	34'-8"	69'-4"	TRANS. BOT. OF SLAB
405	50	34'-10"	1741'-8"	TRANS. TOP & BOT. OF SLAB
TOTAL NO. 4 BARS = 2433'-6" = 1626 LBS.				
TOTAL DEFORMED REINFORCING STEEL = 5617 LBS.				
CLASS A1 CONCRETE = 25.64 CU. YDS.				
CONCRETE RAILING (BARRIER TYPE) = 40.00 LIN. FT.				

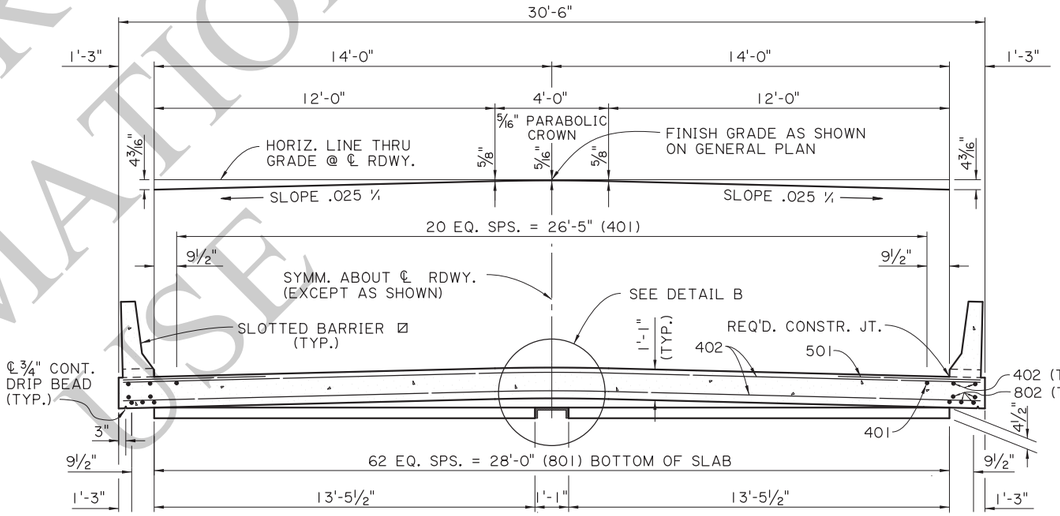

SECTION A-A
SCALE: ⅜" = 1'-0"

Ø STANDARD BARRIERS REQUIRED ON END SPANS.

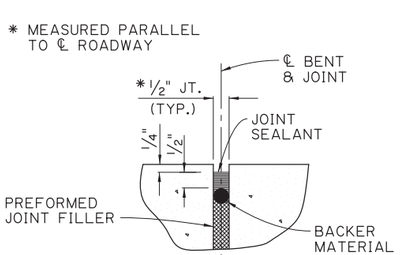

DETAIL "A"
N.T.S.

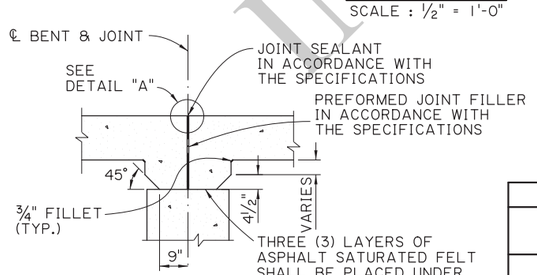

DETAIL SHOWING TYPICAL JOINT & HAUNCH
SCALE : ½" = 1'-0"

AS-DESIGNED RATING		
VEHICLE	RATING FACTOR	NOTES
HL-93 (INV)	1.366	——
HL-93 (OPR)	1.771	——
LADV-11 (INV)	1.051	MAGNIFICATION FACTOR = 1.3

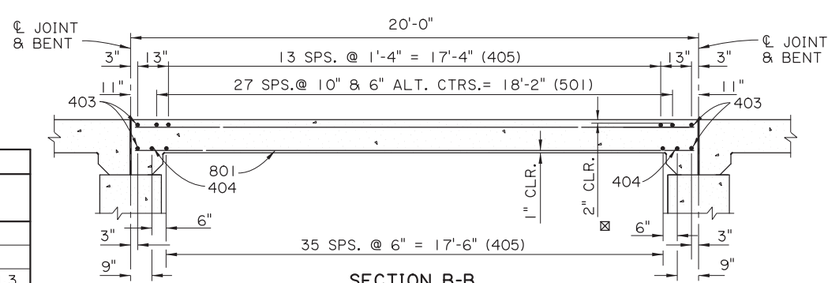

SECTION B-B
SCALE ⅜" = 1'-0"

⊠ FOR BRIDGES IN DISTRICT 04 & 05, MIN. CONCRETE COVER IN TOP OF SLAB SHALL BE 2½".

SHEET NUMBER

PARISH	CONTROL SECTION	STATE PROJECT

DESIGN	B. DELATTE
CHECK	J. NAKHLEH
DETAIL	D. HYMEL
CHECK	J. NAKHLEH
REVIEW	SERIES # 2 OF 11

APPROVED BY CHIEF ENGINEER:
DATE: 12/10/2025

NO.	DATE	REVISION OR CHANGE ORDER DESCRIPTION	BY

SPAN (1 OF 2)
20'-0" CONCRETE SLAB SPAN

28'-0" CLEAR ROADWAY
60° CROSSING TWO WAY TANGENT

PSS-60-28-20SL

DOTD
LOUISIANA DEPARTMENT OF TRANSPORTATION & DEVELOPMENT

STANDARD PLAN

FOR INFORMATIONAL PURPOSE

IP_PWP:d1246416\SS6028span1(LRFD).dgn

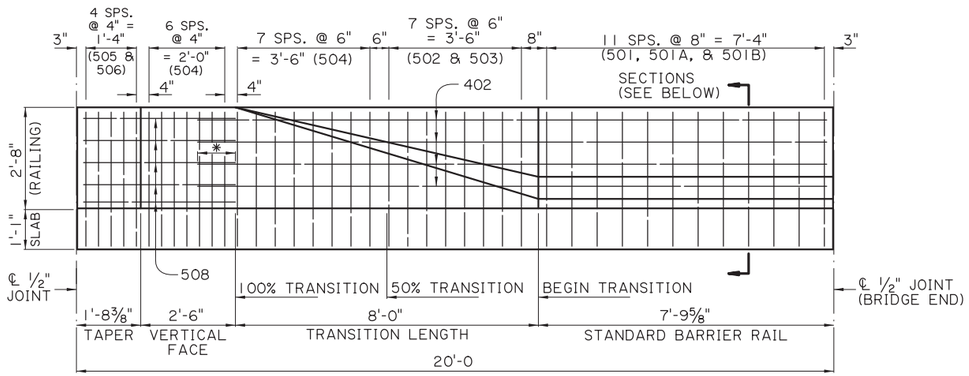

* 1'-0" (MIN.) SPLICE

BARRIER RAILING TRANSITION ELEVATION
(SHOWING BARRIER RAILING AT END OF BRIDGE)
SCALE: ½" = 1'-0"

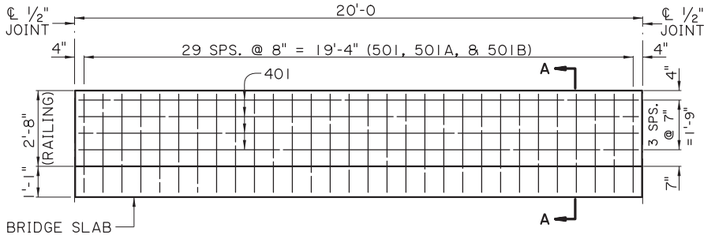

STANDARD BARRIER RAILING ELEVATION
(SHOWING BARRIER RAILING ALONG BRIDGE SLAB)
SCALE: ⅜" = 1'-0"

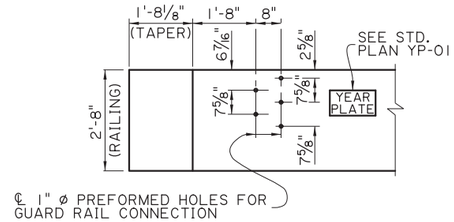

GUARD RAIL CONNECTION DETAIL
CONFORM TO GUARD RAIL STANDARD PLANS
SCALE: ½" = 1'-0"

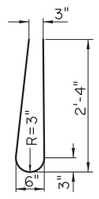

BARS 501
(4'-10" LONG)

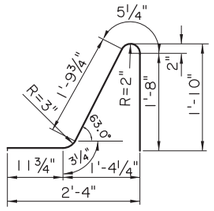

BARS 501A
(5'-2" LONG)

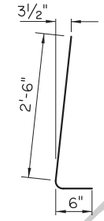

BARS 501B
(2½" ø PIN)
(3'-0" LONG)

⚠ ON SLOPE

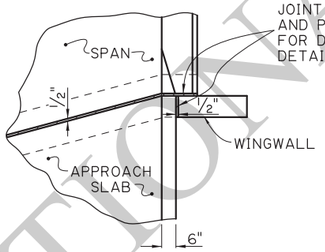

JOINT DETAIL
SCALE : ⅜" = 1'-0"

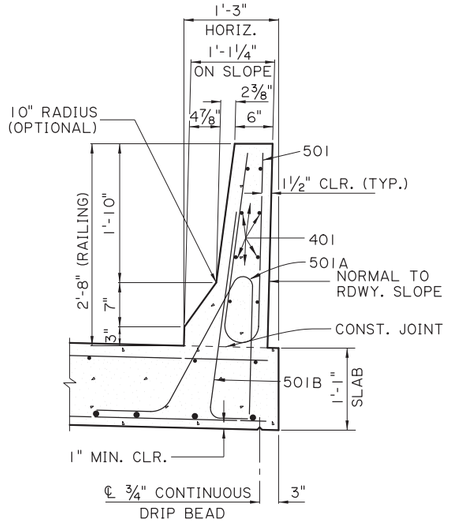

SECTION A-A
SCALE: 1" = 1'-0"

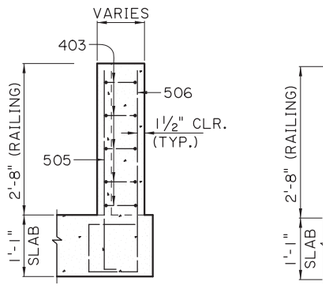

TAPER

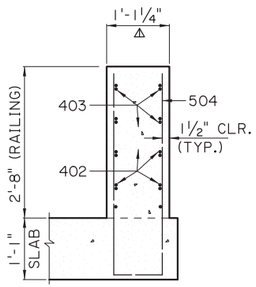

100 % TRANSITION

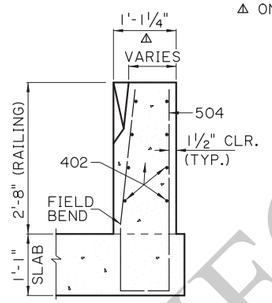

FROM 50% TO 100 % TRANSITION

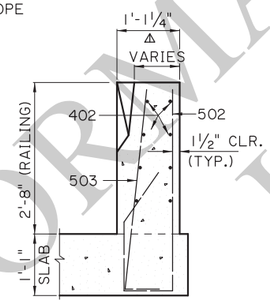

FROM BEGIN TO 50 % TRANSITION

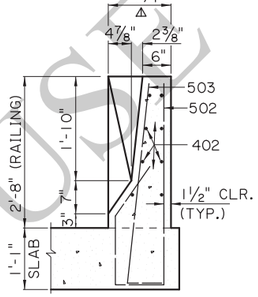

BEGIN TRANSITION

BARRIER RAILING TRANSITION SECTIONS
SCALE: ¾" = 1'-0"

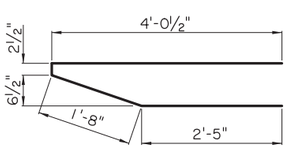

403
(2½" ø PIN)

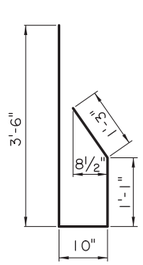

502
(2½" ø PIN)

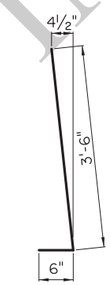

503
(2½" ø PIN)

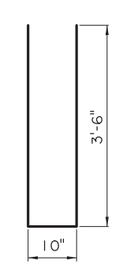

504
(2½" ø PIN)

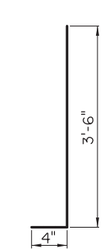

505
(2½" ø PIN)

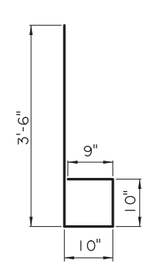

506
(2½" ø PIN)

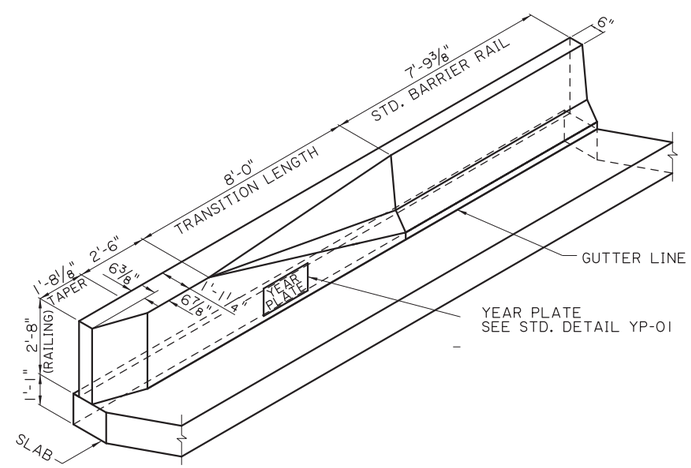

FOR INFORMATIONAL USE

SHEET NUMBER

PARISH | CONTROL SECTION | STATE PROJECT

DESIGN B. DELATTE | CHECK J. NAKHLEH | DETAIL D. HYMEL | CHECK | REVIEW J. NAKHLEH | SERIES # 3 OF 11

APPROVED BY CHIEF ENGINEER: DATE: 12/10/2025

REVISION OR CHANGE ORDER DESCRIPTION | BY | DATE | NO.

STATE OF LOUISIANA DEPARTMENT OF TRANSPORTATION AND DEVELOPMENT

SPAN (2 OF 2) 20'-0" CONCRETE BARRIER

28'-0" CLEAR ROADWAY
60° CROSSING TWO WAY TANGENT

PSS-60-28-20SL

DOTD LOUISIANA DEPARTMENT OF TRANSPORTATION & DEVELOPMENT

STANDARD PLAN

11/20/2025 13:3

IP_PWP:d1246416\SS6028span2(LRFD).dgn

11/20/2025 13:4
IP_PWP:d1246416\SS6028aprslab(LRFD).dgn

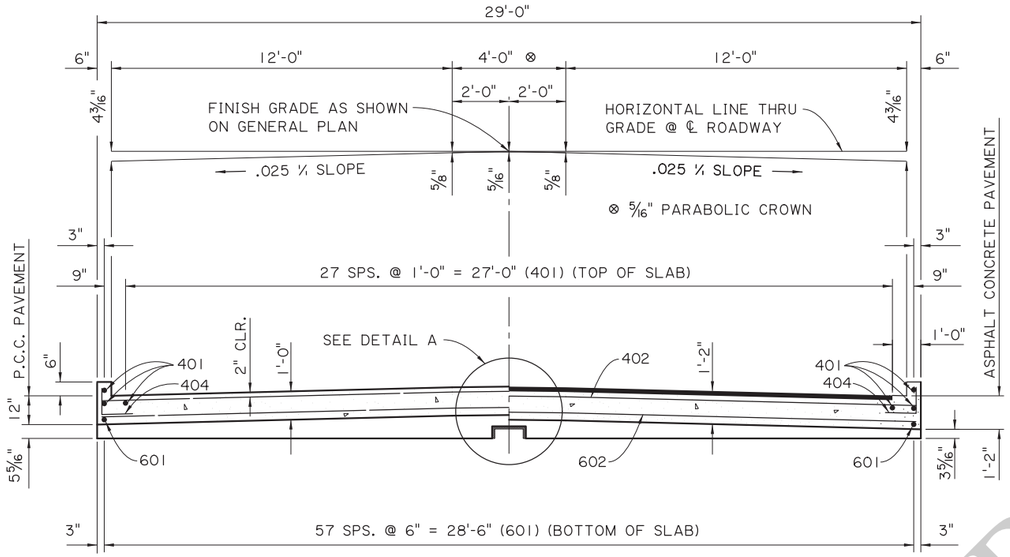

SECTION A-A
SCALE ⅜" = 1'-0"

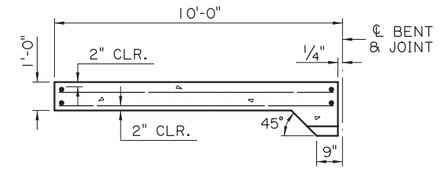

(FOR PORTLAND CEMENT CONCRETE ROADWAY PAVEMENT)

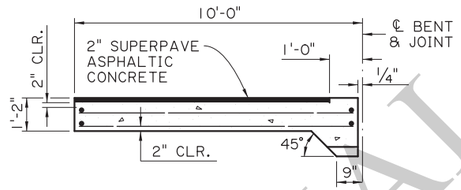

(FOR ASPHALT CONCRETE ROADWAY PAVEMENT)

SECTION ALONG ℄ ROADWAY
SCALE: ⅜" = 1'-0"

ESTIMATED QUANTITIES (ONE SLAB)				
BAR	NO.	UNIT LENGTH	TOTAL LENGTH	LOCATION
601	58	9'-7"	555'-10"	LONGIT. BOT. OF SLAB
602	2	32'-10"	65'-8"	TRANSV. BOT. OF SLAB
603	18	33'-1"	595'-6"	TRANSV. BOT. OF SLAB
TOTAL NO. 6 BARS = 1217'-0" = 1,828 LBS.				
401	32	9'-7"	306'-8"	LONGIT. TOP OF SLAB & CURB
402	2	32'-10"	65'-8"	TRANSV. TOP OF SLAB
403	9	33'-1"	297'-9"	TRANSV. TOP OF SLAB
404	14	2'-0"	28'-0"	DOWELS IN CURB
TOTAL NO. 4 BARS = 698'-1" = 466 LBS.				
⊙ TOTAL DEFORMED REINFORCING STEEL = 2,294 LBS.				
CONCRETE APPROACH SLAB = 32.22 SQ. YDS.				
⊙ ☑ ASPHALT CONCRETE = 3.0 TONS				
⊙ ☑ SAW CUT & SEAL = 31 LIN. FT.				

⊙ TO BE PAID FOR UNDER ITEM CONCRETE APPROACH SLABS.
☑ REQUIRED WHEN APPROACH SLAB IS ADJACENT TO ASPHALT CONCRETE PAVEMENT.

APPROACH SLAB NOTES:

DESIGN SPECIFICATIONS: AASHTO LRFD BRIDGE DESIGN SPECIFICATIONS 4th EDITION, WITH 2008 & 2009 INTERIMS.
STRUCTURAL CONCRETE: ALL CONCRETE SHALL BE CLASS A1. EXPOSED EDGES SHALL HAVE A ¾" CHAMFER, UNLESS SPECIFIED OTHERWISE.
ASPHALT CONCRETE: TO BE THE SAME TYPE AS THE ASPHALT CONCRETE USED FOR THE APPROACH ROADWAY PAVEMENT OR OVERLAY.
REINFORCING STEEL: ALL REINFORCING STEEL SHALL BE GRADE 60. DIMENSIONS RELATING TO THE FABRICATION ARE OUT-TO-OUT OF BARS, UNLESS SPECIFIED OTHERWISE. DIMENSIONS RELATING TO SPACING ARE TO BAR CENTERS.
BEDDING MATERIAL: FOR DETAILS OF BEDDING MATERIAL AND UNDERDRAINS SEE APPROACH SLAB STANDARD DETAILS.
SAWING & SEALING: THE ASPHALT CONCRETE SHALL BE SAW CUT AT THE END OF THE CONCRETE APPROACH SLAB THE ENTIRE ROADWAY WIDTH AND SEALED WHICH WILL BE PAID FOR UNDER THE DESIGNATED ROADWAY PAY ITEM.
PAYMENT: ALL OTHER WORK WILL BE PAID FOR UNDER THE DESIGNATED BRIDGE CONCRETE APPROACH SLAB PAY ITEM AND IN ACCORDANCE WITH SPECIFICATIONS.

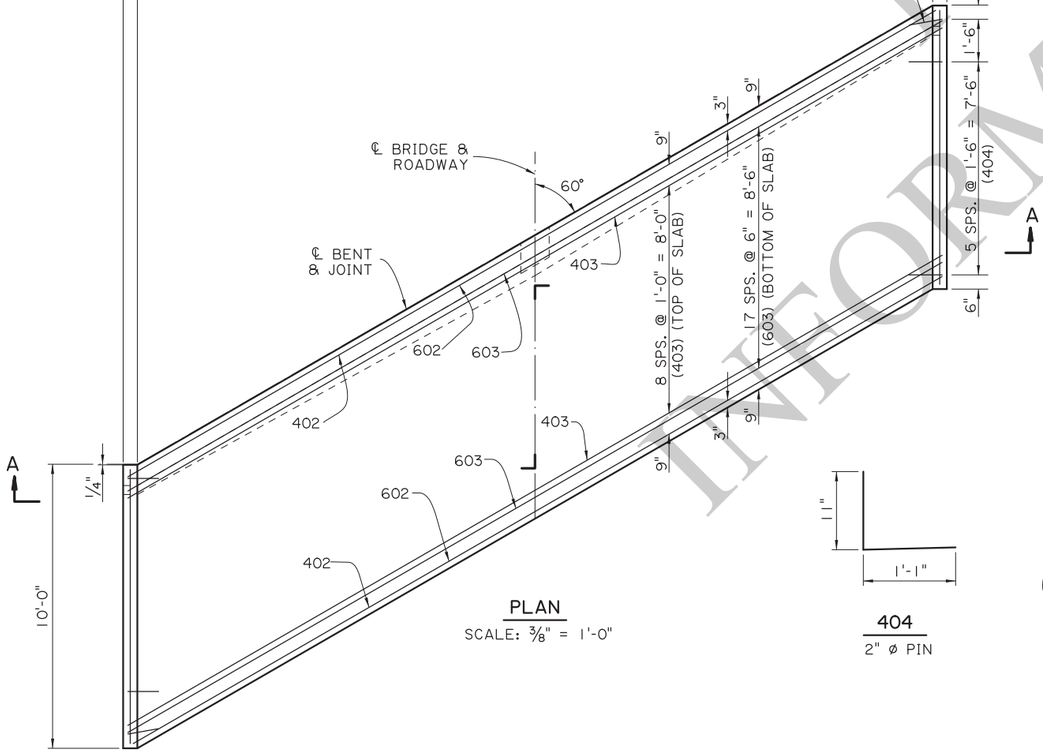

PLAN
SCALE: ⅜" = 1'-0"

404
2" ø PIN

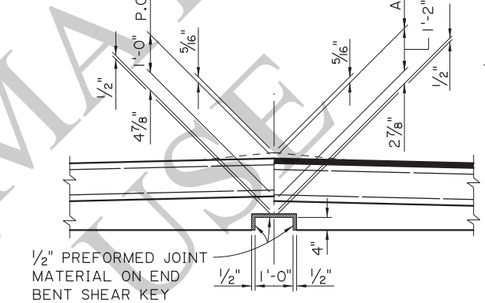

DETAIL A
SCALE : ½" = 1'-0"

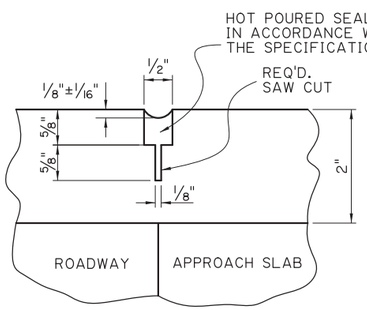

SAWING & SEALING JOINT DETAIL
N.T.S.

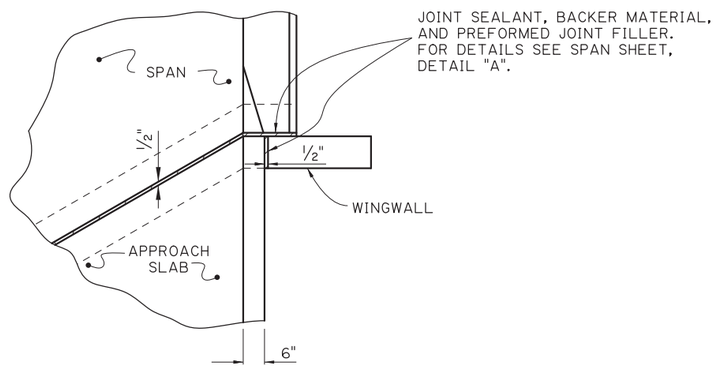

JOINT DETAIL
SCALE : ⅜" = 1'-0"

FOR INFORMATIONAL USE

SHEET NUMBER

PARISH	CONTROL SECTION	STATE PROJECT

DESIGN	B. DELATTE	DETAIL	D. HYMEL	REVIEW	SERIES # 4 OF 11
CHECK	J. NAKHLEH	CHECK	J. NAKHLEH		

APPROVED BY CHIEF ENGINEER: DATE: 12/10/2025

NO.	DATE	REVISION OR CHANGE ORDER DESCRIPTION	BY

STATE OF LOUISIANA

APPROACH SLAB
10'-0" CONCRETE APPROACH SLAB
28'-0" CLEAR ROADWAY
60° CROSSING TWO WAY TANGENT
PSS-60-28-20SL

DOTD
LOUISIANA DEPARTMENT OF TRANSPORTATION & DEVELOPMENT

STANDARD PLAN

09:4
11/25/2025

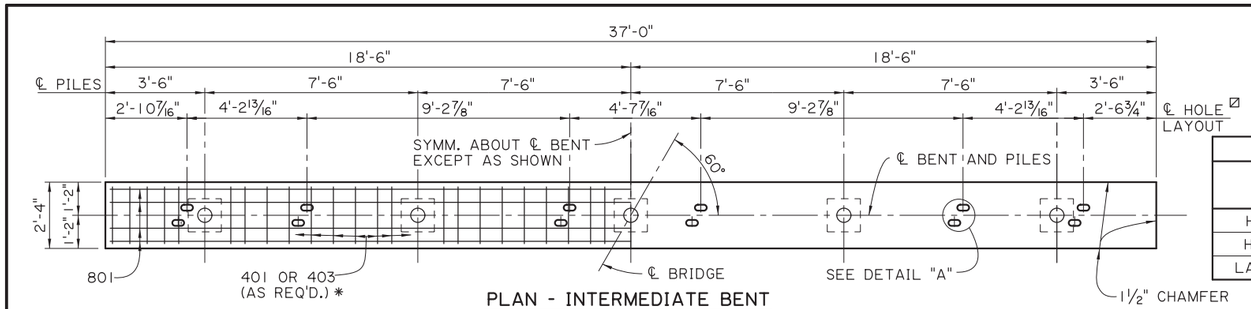

PLAN - INTERMEDIATE BENT

SCALE: ⅜" = 1'-0"

☒ HOLES ARE OPTIONAL AT EXPANSION ENDS.

AS-DESIGNED RATING		
VEHICLE	RATING FACTOR	NOTES
HL-93 (INV)	2.469	——
HL-93 (OPR)	3.201	——
LADV-11 (INV)	1.899	MAGNIFICATION FACTOR = 1.3

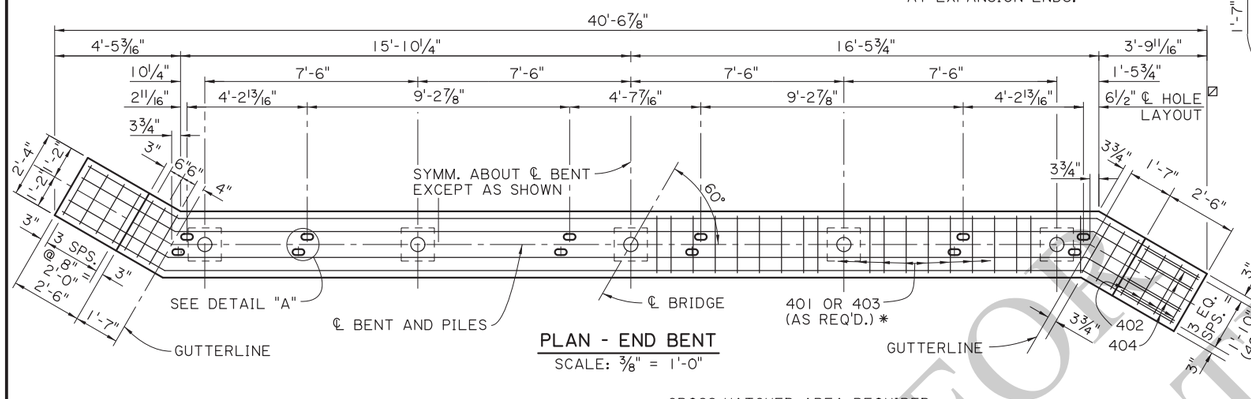

PLAN - END BENT

SCALE: ⅜" = 1'-0"

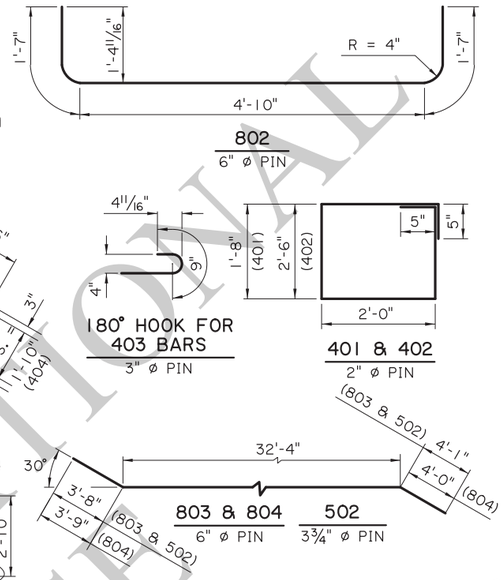

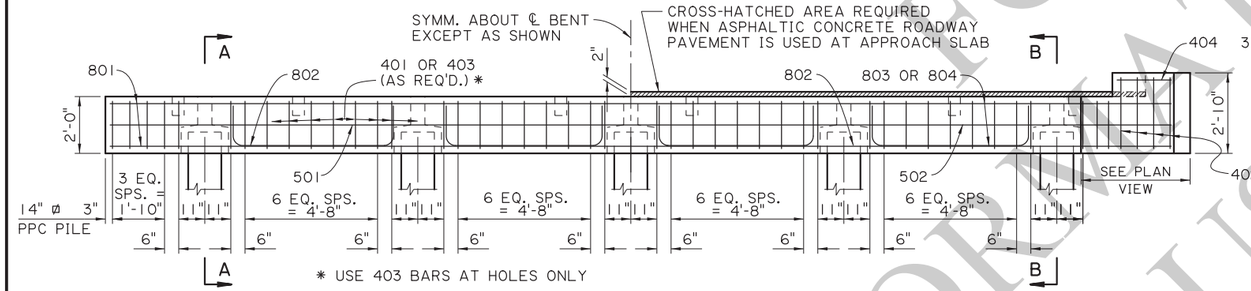

HALF ELEVATION - INTERMEDIATE BENT

SCALE: ⅜" = 1'-0"

HALF ELEVATION - END BENT

SCALE: ⅜" = 1'-0"

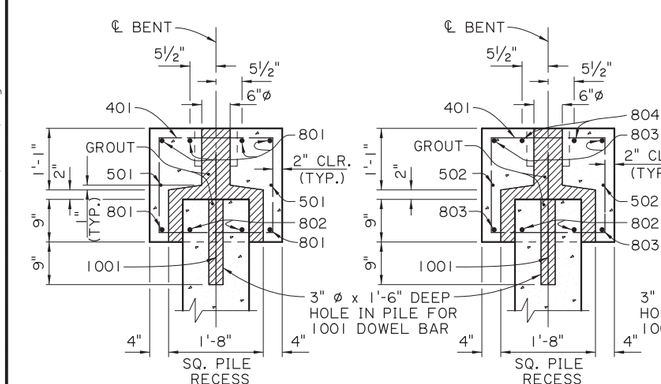

SECTION A-A

SCALE: ¾" = 1'-0"

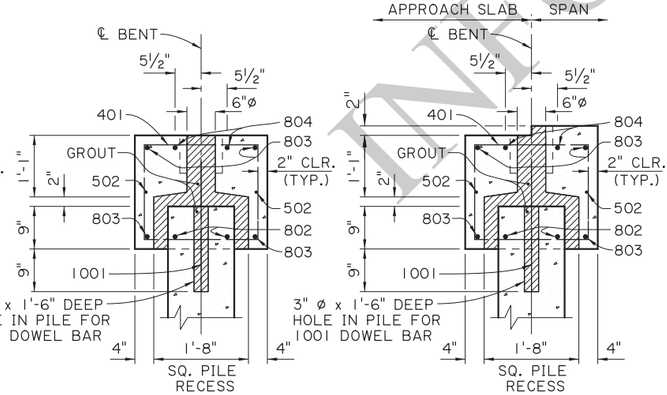

SECTION B-B

SCALE: ¾" = 1'-0"

(WHEN PORTLAND CEMENT CONCRETE ROADWAY PAVEMENT IS USED AT APPROACH SLAB)

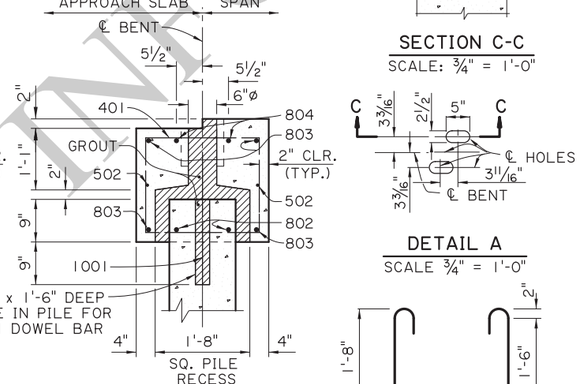

SECTION B-B

SCALE: ¾" = 1'-0"

(WHEN ASPHALTIC CONCRETE ROADWAY PAVEMENT IS USED AT APPROACH SLAB)

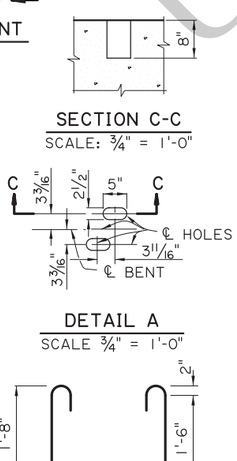

ESTIMATED QUANTITIES (ONE INTER. BENT)

BAR	NO.	UNIT LENGTH	TOTAL LENGTH	LOCATION
1001	5	2'-4"	11'-8"	DOWELS IN PILES
TOTAL NO. 10 BARS = 11'-8" = 50 LBS.				
801	6	36'-8"	220'-0"	LONGIT. IN CAP
802	8	8'-0"	64'-0"	LONGIT. IN CAP BTW. PILES
TOTAL NO. 8 BARS = 284'-0" = 758 LBS.				
501	2	36'-8"	73'-4"	LONGIT. IN CAP
TOTAL NO. 5 BARS = 73'-4" = 76 LBS.				
401	40	8'-2"	326'-8"	STIRRUPS IN CAP
403	6	6'-6"	39'-0"	STIRRUPS IN CAP
TOTAL NO. 4 BARS = 365'-8" = 244 LBS.				
TOTAL DEFORMED REINFORCING STEEL = 1,128 LBS.				
TOTAL CLASS P1 CONCRETE = 5.84 CU. YDS.				
MAX. PILE LOAD: SERVICE DEAD LOAD = 18 TONS SERVICE LIVE LOAD = 31 TONS FACTORED TOTAL LOAD = 68 TONS				
TOTAL GROUT FOR PILE RECESSES = 0.36 CU. YDS.				

ESTIMATED QUANTITIES (ONE END BENT)

BAR	NO.	UNIT LENGTH	TOTAL LENGTH	LOCATION
1001	5	2'-4"	11'-8"	DOWELS IN PILES
TOTAL NO. 10 BARS = 11'-8" = 50 LBS.				
802	8	8'-0"	64'-0"	LONGIT. IN CAP BTW. PILES
803	4	40'-1"	160'-4"	LONGIT. IN CAP
804	2	40'-1"	80'-2"	LONGIT. IN CAP
TOTAL NO. 8 BARS = 304'-6" = 813 LBS.				
502	2	40'-1"	80'-2"	LONGIT. IN CAP
TOTAL NO. 5 BARS = 80'-2" = 84 LBS.				
401	38	8'-2"	310'-4"	STIRRUPS IN CAP
402	8	9'-10"	78'-8"	STIRRUPS IN WINGWALL
403	6	6'-6"	39'-0"	STIRRUPS IN CAP
404	8	2'-2"	17'-4"	LONGIT. IN WINGWALL
TOTAL NO. 4 BARS = 445'-4" = 297 LBS.				
TOTAL DEFORMED REINFORCING STEEL = 1,244 LBS.				
⊗ TOTAL CLASS P1 CONCRETE = 6.81 CU. YDS.				
MAX. PILE LOAD: SERVICE DEAD LOAD = 18 TONS SERVICE LIVE LOAD = 31 TONS FACTORED TOTAL LOAD = 68 TONS				
TOTAL GROUT FOR PILE RECESSES = 0.36 CU. YDS.				

⊗ ADD 0.26 CU. YDS. OF CLASS P1 CONCRETE PER BENT WHEN ASPHALTIC CONCRETE ROADWAY PAVEMENT IS USED AT APPROACH SLAB.

ALTERNATE BENT NOTES:

DESIGN SPECIFICATIONS: AASHTO LRFD BRIDGE DESIGN SPECIFICATIONS, 4th EDITION, WITH 2008 & 2009 INTERIMS.
DESIGN LOAD: LIVE LOAD IS HL-93, AND LADV-11 (LOUISIANA DESIGN VEHICLE LIVE LOAD 2011).
STRUCTURAL CONCRETE: ALL CONCRETE SHALL BE CLASS P1. STEEL SIDE FORMS AND STEEL OR CONCRETE BOTTOM FORMS SHALL BE USED FOR PRECAST COMPONENTS. EXPOSED EDGES SHALL HAVE A ¾" CHAMFER UNLESS SPECIFIED OTHERWISE. ALL SURFACES SHALL RECEIVE A CLASS 1 ORDINARY SURFACE FINISH UPON REMOVAL OF THE FORMS. ALL EXPOSED FACES OF WINGWALLS AND ENDS OF CAPS SHALL RECEIVE A CLASS 3 SPECIAL SURFACE FINISH.
REINFORCING STEEL: ALL REINFORCING SHALL BE GRADE 60. DIMENSIONS RELATING TO FABRICATION ARE OUT TO OUT OF BARS, UNLESS SPECIFIED OTHERWISE. DIMENSIONS RELATING TO SPACING ARE TO BAR CENTERS, UNLESS SPECIFIED OTHERWISE.
GROUT: THE GROUT SHALL BE AN APPROVED FLOWABLE NON-SHRINK GROUT LISTED ON AML. THE GROUT SHALL BE TESTED FOR ACCEPTANCE PRIOR TO USAGE. SURFACES SHALL BE THOROUGHLY SATURATED WITH WATER BY FLOODING THE VOID FOR APPROXIMATELY 5 MINUTES IMMEDIATELY BEFORE THE GROUT IS PLACED. ONLY POTABLE WATER SHALL BE USED FOR SATURATION AND MIXING PURPOSES.
PRECAST UNITS: THE PLANS FOR AN ONGOING OPERATION OF FABRICATING FACILITIES SHALL BE APPROVED BY THE DEPARTMENT. EACH UNIT SHALL HAVE THE FABRICATOR'S MARK AND UNIQUE NUMBER, MEETING THE APPROVAL OF THE ENGINEER, STAMPED OR SCRIBED IN THE PLASTIC CONCRETE. ALL UNITS SHALL BE HELD AT THE PLANT FOR A MINIMUM OF 10 DAYS AFTER CASTING. THE CONCRETE SHALL REACH A MINIMUM STRENGTH OF 3,000 PSI BEFORE HANDLING IS PERMITTED. THE LIFTING INSERTS SHALL BE 1" TYPE S INSERTS AS MANUFACTURED BY DAYTON-SUPERIOR CORPORATION OR AN APPROVED EQUAL. EACH INSERT SHALL HAVE A MINIMUM LOAD CAPACITY OF 10,000 POUNDS. FOUR INSERTS WITH 1" ø x 5" LONG COIL BOLTS SHALL BE PLACED IN THE TOP OF THE UNITS AND LOCATED AT A DISTANCE 21% OF ITS LENGTH (+/- 6") FROM EACH END AND 6" FROM THE EDGES. INSERT HOLES SHALL BE GROUT FILLED AFTER PLACEMENT OF THE UNIT. AT THE CONTRACTOR'S OPTION, A SLING OF SUFFICIENT CAPACITY MAY BE USED FOR LIFTING, PROVIDED THE SAME PICKUP LOCATIONS FROM THE ENDS ARE USED.
PRECAST CONCRETE PILES: CONFORM TO PILE STANDARD PLAN AND PROJECT PLANS FOR FABRICATION AND INSTALLATION. IF TOP CENTER OF DRIVEN PILE IS OUTSIDE OF SPECIFIED HORIZONTAL TOLERANCES BUT WITHIN SPECIFIED VERTICAL TOLERANCES, PROVIDE CAST-IN-PLACE BENT CAP IN ACCORDANCE WITH THIS STANDARD PLAN. PILES WILL BE PAID FOR UNDER THE DESIGNATED PILE PAY ITEMS.
PAYMENT: ALL OTHER WORK WILL BE PAID FOR UNDER THE DESIGNATED BRIDGE SUPERSTRUCTURE AND SUBSTRUCTURE PAY ITEM AND IN ACCORDANCE WITH THE SPECIFICATIONS.

SHEET NUMBER

PARISH | CONTROL SECTION | STATE PROJECT

DESIGN J. NAKHLEH | CHECK B. DELATTE | DETAIL D. HYMEL | CHECK J. NAKHLEH | REVIEW J. NAKHLEH | SERIES # 5 OF 11

APPROVED BY CHIEF ENGINEER: DATE: 12/10/2025

NO.	DATE	REVISION OR CHANGE ORDER DESCRIPTION	BY

STATE OF LOUISIANA — DEPARTMENT OF TRANSPORTATION AND DEVELOPMENT

ALTERNATE BENTS PRECAST CONCRETE BENT

28'-0" CLEAR ROADWAY
60° CROSSING TWO WAY TANGENT

PSS-60-28-20SL

DOTD — LOUISIANA DEPARTMENT OF TRANSPORTATION & DEVELOPMENT

STANDARD PLAN

IP_PWP:d1246416\SS6028altbent1(LRFD).dgn

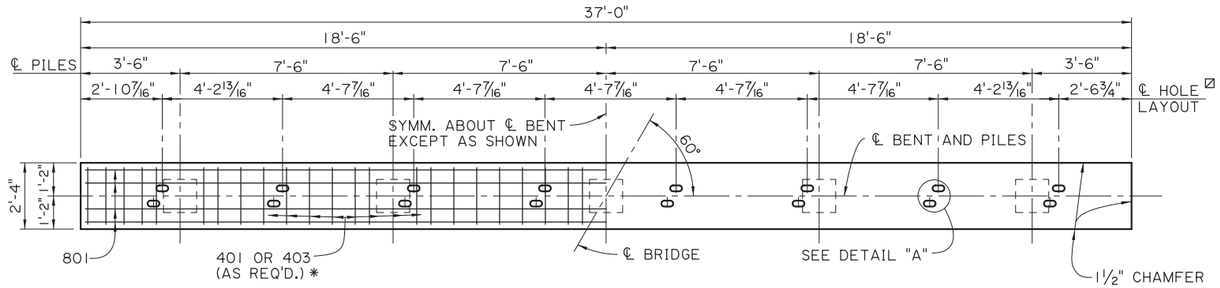

PLAN - INTERMEDIATE BENT

SCALE: 3/8" = 1'-0"

☒ HOLES ARE OPTIONAL AT EXPANSION ENDS.

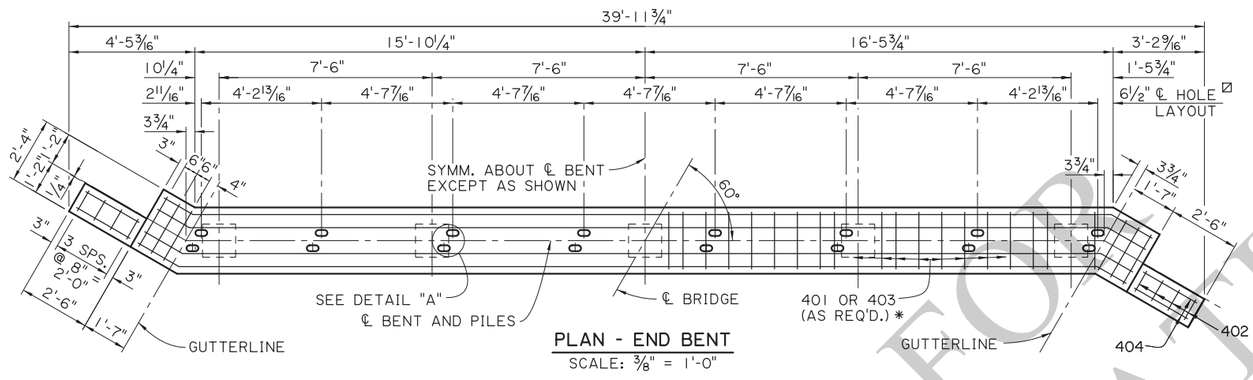

PLAN - END BENT

SCALE: 3/8" = 1'-0"

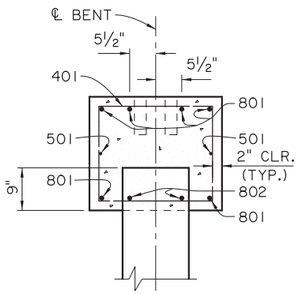

SECTION A-A

SCALE: 3/4" = 1'-0"

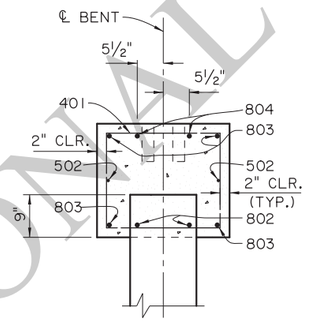

SECTION B-B

SCALE: 3/4" = 1'-0"

(WHEN PORTLAND CEMENT CONCRETE ROADWAY PAVEMENT IS USED AT APPROACH SLAB)

ESTIMATED QUANTITIES (ONE INTER. BENT)

BAR	NO.	UNIT LENGTH	TOTAL LENGTH	LOCATION
801	6	36'-8"	220'-0"	LONGIT. IN CAP
802	8	8'-4"	66'-8"	LONGIT. IN CAP BTW. PILES
TOTAL NO. 8 BARS = 286'-8" = 765 LBS.				
501	2	36'-8"	73'-4"	LONGIT. IN CAP
TOTAL NO. 5 BARS = 73'-4" = 76 LBS.				
401	38	8'-2"	310'-4"	STIRRUPS IN CAP
403	8	6'-6"	52'-0"	STIRRUPS IN CAP
TOTAL NO. 4 BARS = 362'-4" = 242 LBS.				
TOTAL DEFORMED REINFORCING STEEL = 1,083 LBS.				
☒ TOTAL CLASS A1 CONCRETE = 6.15 CU. YDS.				
MAX. PILE LOAD: SERVICE DEAD LOAD = 18 TONS SERVICE LIVE LOAD = 31 TONS FACTORED TOTAL LOAD = 68 TONS				

☒ 16" ø PPC PILES USED FOR ESTIMATING PURPOSES ONLY. (ADD 0.06 CU. YDS. OF CLASS A1 CONCRETE PER BENT WHEN 14" ø PPC PILES ARE USED.)

ESTIMATED QUANTITIES (ONE END BENT)

BAR	NO.	UNIT LENGTH	TOTAL LENGTH	LOCATION
802	8	8'-4"	66'-8"	LONGIT. IN CAP BTW. PILES
803	4	35'-1"	140'-4"	LONGIT. IN CAP
804	2	35'-2"	70'-4"	LONGIT. IN CAP
TOTAL NO. 8 BARS = 277'-4" = 740 LBS.				
502	2	35'-1"	70'-2"	LONGIT. IN CAP
TOTAL NO. 5 BARS = 70'-2" = 73 LBS.				
401	36	8'-2"	294'-0"	STIRRUPS IN CAP
402	8	7'-6"	60'-0"	STIRRUPS IN WINGWALL
403	8	6'-6"	52'-0"	STIRRUPS IN CAP
404	4	2'-2"	8'-8"	LONGIT. IN WINGWALL
405	12	3'-11"	47'-0"	LONGIT. IN WINGWALL
TOTAL NO. 4 BARS = 461'-8" = 308 LBS.				
TOTAL DEFORMED REINFORCING STEEL = 1,121 LBS.				
⊗ TOTAL CLASS A1 CONCRETE = 6.49 CU. YDS.				
MAX. PILE LOAD: SERVICE DEAD LOAD = 18 TONS SERVICE LIVE LOAD = 31 TONS FACTORED TOTAL LOAD = 68 TONS				

⊗ 16" ø PPC PILES USED FOR ESTIMATING PURPOSES ONLY. (ADD 0.06 CU. YDS. OF CLASS A1 CONCRETE PER BENT WHEN 14" ø PPC PILES ARE USED.) ADD 0.26 CU. YDS. OF CLASS A1 CONCRETE PER BENT WHEN ASPHALTIC CONCRETE ROADWAY PAVEMENT IS USED AT APPROACH SLAB.

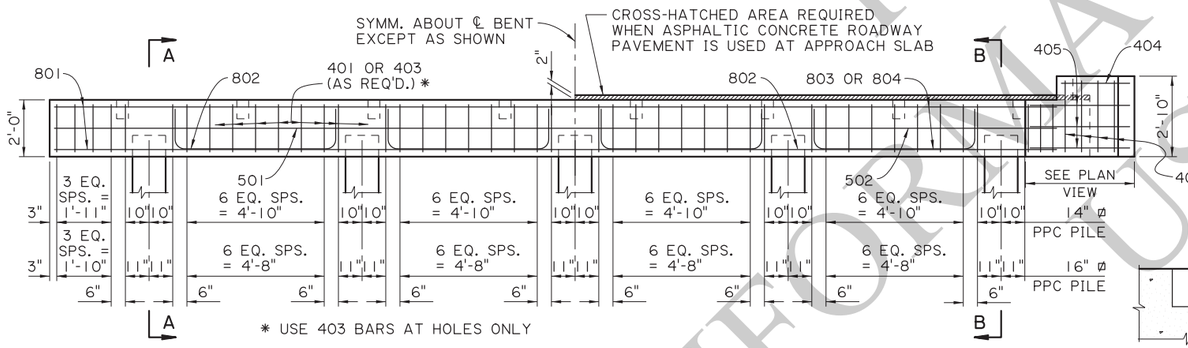

HALF ELEVATION - INTERMEDIATE BENT

SCALE: 3/8" = 1'-0"

HALF ELEVATION - END BENT

SCALE: 3/8" = 1'-0"

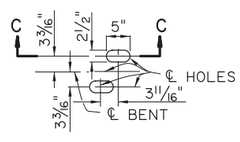

DETAIL A

SCALE 3/4" = 1'-0"

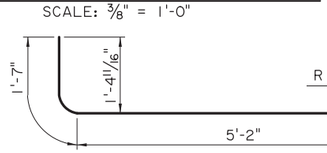

802

6" ø PIN

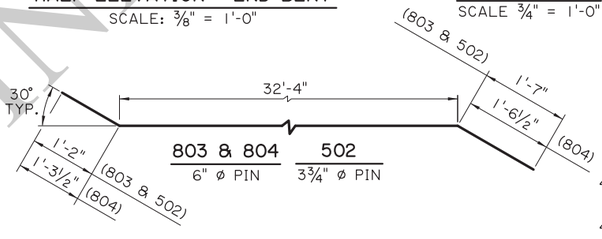

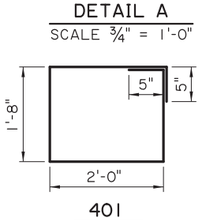

401

2" ø PIN

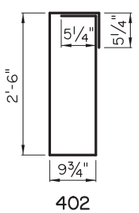

402

2" ø PIN

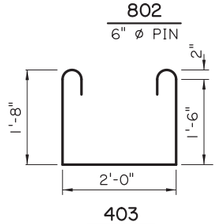

403

2" ø PIN

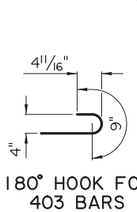

180° HOOK FOR 403 BARS

3" ø PIN

AS-DESIGNED RATING

VEHICLE	RATING FACTOR	NOTES
HL-93 (INV)	2.007	———
HL-93 (OPR)	2.602	———
LADV-11 (INV)	1.544	MAGNIFICATION FACTOR = 1.3

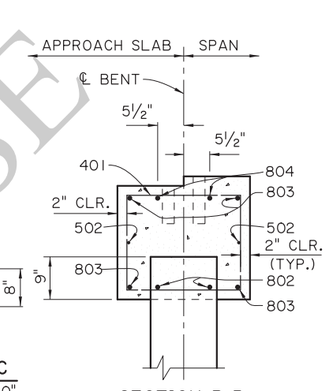

SECTION B-B

SCALE :¾" = 1'-0"

(WHEN ASPHALTIC CONCRETE ROADWAY PAVEMENT IS USED AT APPROACH SLAB)

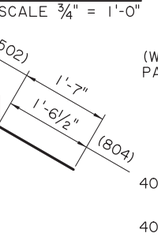

SECTION C-C

SCALE ¾" = 1'-0"

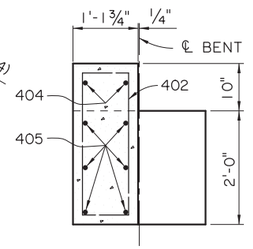

END ELEVATION

SCALE: 3/4" = 1'-0"

ALTERNATE BENT NOTES:

DESIGN SPECIFICATIONS: AASHTO LRFD BRIDGE DESIGN SPECIFICATIONS, 4th EDITION, WITH 2008 & 2009 INTERIMS.

DESIGN LOAD: LIVE LOAD IS HL-93, AND LADV-11 (LOUISIANA DESIGN VEHICLE LIVE LOAD 2011).

STRUCTURAL CONCRETE: ALL CONCRETE SHALL BE CLASS A1. EXPOSED EDGES SHALL HAVE A ¾" CHAMFER UNLESS SPECIFIED OTHERWISE. ALL EXPOSED FACES OF WINGWALLS AND ENDS OF CAPS SHALL RECEIVE A SURFACE FINISH AS PER THE SPECIFICATIONS.

REINFORCING STEEL: ALL REINFORCING SHALL BE GRADE 60. DIMENSIONS RELATING TO FABRICATION ARE OUT TO OUT OF BARS, UNLESS SPECIFIED OTHERWISE. DIMENSIONS RELATING TO SPACING ARE TO BAR CENTERS, UNLESS SPECIFIED OTHERWISE.

PRECAST CONCRETE PILES: CONFORM TO PILE STANDARD PLAN AND PROJECT PLANS FOR FABRICATION AND INSTALLATION. PILES WILL BE PAID FOR UNDER THE DESIGNATED PILE PAY ITEMS.

PAYMENT: ALL OTHER WORK WILL BE PAID FOR UNDER THE DESIGNATED BRIDGE SUPERSTRUCTURE AND SUBSTRUCTURE PAY ITEM AND IN ACCORDANCE WITH THE SPECIFICATIONS.

FOR INFORMATIONAL USE

SHEET NUMBER

PARISH | CONTROL SECTION | STATE PROJECT

DESIGN J. NAKHLEH | CHECK B. DELATTE | DETAIL D. HYMEL | CHECK J. NAKHLEH | REVIEW | SERIES # 6 OF 11

APPROVED BY CHIEF ENGINEER: DATE: 12/10/2025

NO. | DATE | REVISION OR CHANGE ORDER DESCRIPTION | BY

STATE OF LOUISIANA DEPARTMENT OF TRANSPORTATION AND DEVELOPMENT

ALTERNATE BENTS CAST-IN-PLACE CONCRETE BENTS

28'-0" CLEAR ROADWAY
60° CROSSING TWO WAY TANGENT

PSS-60-28-20SL

DOTD LOUISIANA DEPARTMENT OF TRANSPORTATION & DEVELOPMENT

STANDARD PLAN

11:41
11/25/2025
IP_PWP:d1246416\SS6028altbent2(LRFD).dgn

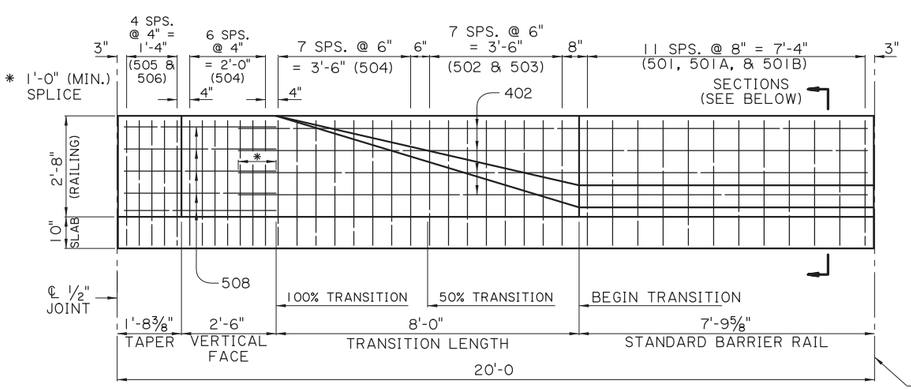

BARRIER RAILING TRANSITION ELEVATION
(SHOWING BARRIER RAILING AT END OF BRIDGE)
SCALE: ½" = 1'-0"

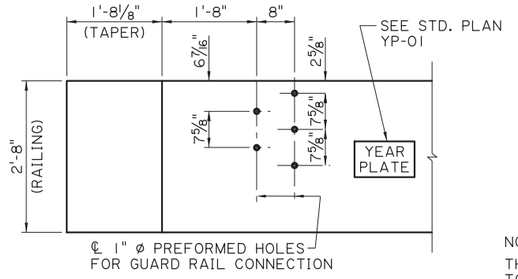

GUARD RAIL CONNECTION DETAIL
CONFORM TO GUARD RAIL STANDARD PLANS
SCALE : ¾" = 1'-0"

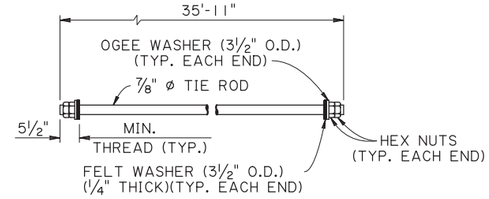

NOTE:

THE NUTS & WASHERS FOR THE TIE ROD SHALL BE ZINC COATED AND THE EXPOSED ENDS TO THE TIE RODS SHALL BE PAINTED WITH AN APPROVED COATING. AS A FINAL OPERATION THE CONTRACTOR SHALL BE REQUIRED TO TORQUE THE INSTALLED TIE ROD TO 170 FT. LBS. JUST PRIOR TO PAINTING. ALL EXPOSED ENDS SHALL BE PAINTED WITH AN APPROVED COATING AFTER STRESSING. ONE (1) MECHANICAL SPLICE MAY BE USED IN SPLICING THE ⅞" ø TIE ROD. THE SPLICE SHALL DEVELOP AT LEAST 125% OF THE SPECIFIED YIELD STRENGTH OF THE TIE ROD IN TENSION. THE MECHANICAL SPLICE SHALL BE ZINC COATED OR PAINTED WITH AN APPROVED COLD GALVANIZING REPAIR COMPOUND FROM AML PRIOR TO PLACING THE TIE ROD IN THE STRUCTURE.

DETAILS OF TIE ROD

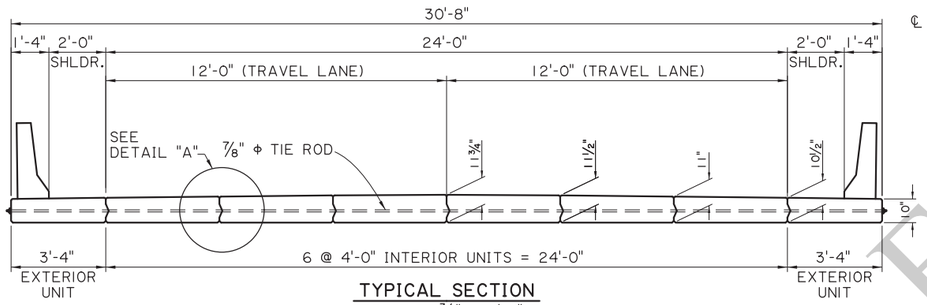

TYPICAL SECTION
SCALE : ⅜" = 1'-0"

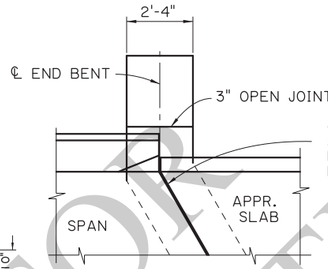

JOINT DETAIL
N.T.S.

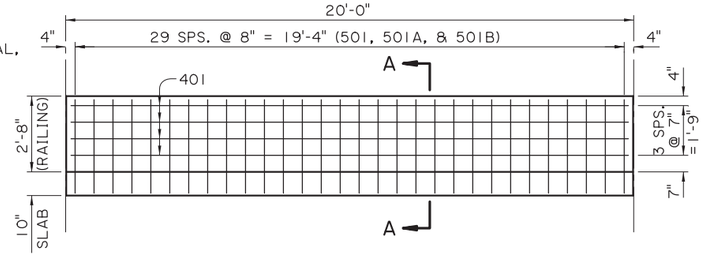

STANDARD BARRIER RAILING ELEVATION
(SHOWING BARRIER RAILING ALONG BRIDGE END)
SCALE : ⅜" = 1'-0"

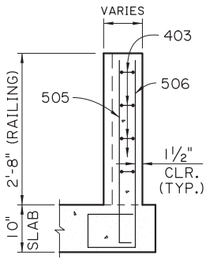

TAPER

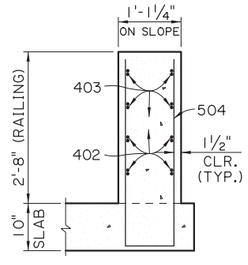

100 % TRANSITION

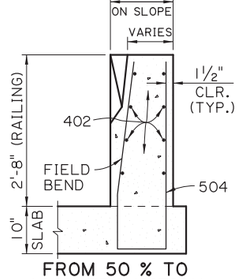

FROM 50 % TO 100% TRANSITION

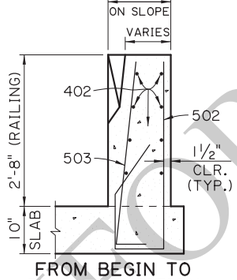

FROM BEGIN TO 50 % TRANSITION

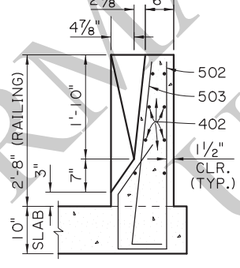

BEGIN TRANSITION

BARRIER RAILING TRANSITION SECTIONS
SCALE: ¾" = 1'-0"

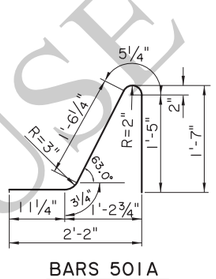

BARS 501A
(4'-7" LONG)

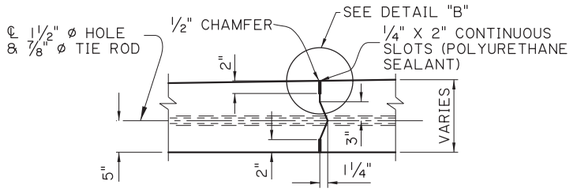

DETAIL "A"
SCALE: 1" = 1'-0"

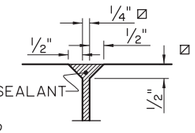

DETAIL "B"
SCALE: 1" = 1'-0"

⌀ MAY BE ⅛" IF ADJACENT MATCH IS USED

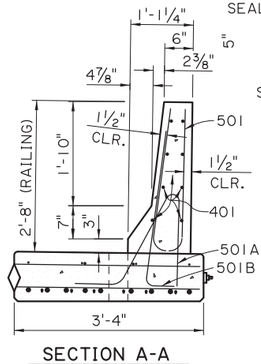

SECTION A-A
SCALE : ¾" = 1'-0"

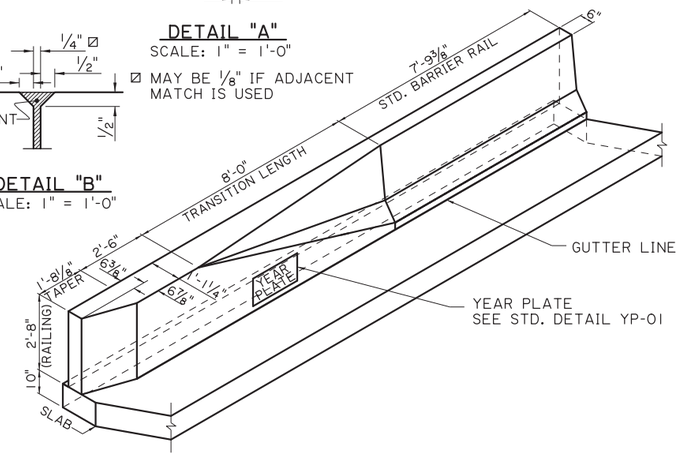

BARRIER RAILING TRANSITION SCHEMATIC
SCALE : ⅜" = 1'-0"

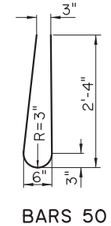

BARS 501
(4'-10" LONG)

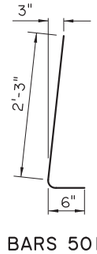

BARS 501B
(2½" ø PIN)
(2'-9" LONG)

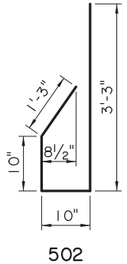

502
(2½" ø PIN)
(6'-2" LONG)

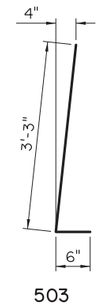

503
(2½" ø PIN)
(3'-9" LONG)

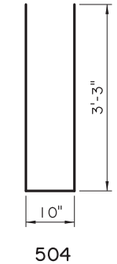

504
(2½" ø PIN)
(7'-4" LONG)

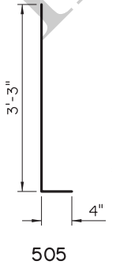

505
(2½" ø PIN)
(3'-7" LONG)

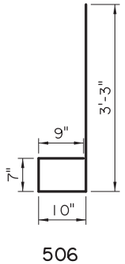

506
(2½" ø PIN)
(5'-5" LONG)

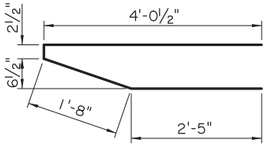

403
(2½"ø PIN)
(8'-4" LONG)

SHEET NUMBER	
PARISH	
CONTROL SECTION	
STATE PROJECT	
DESIGN B. DELATTE	DETAIL D. HYMEL
CHECK J. NAKHLEH	CHECK J. NAKHLEH
REVIEW	SERIES # 7 OF 11

APPROVED BY CHIEF ENGINEER: DATE: 12/10/2025

NO.	DATE	REVISION OR CHANGE ORDER DESCRIPTION	BY

ALTERNATE SPAN (1 OF 4)
20'-0" PRECAST CONC. SLAB SPAN
28'-0" CLEAR ROADWAY
60° CROSSING TWO WAY TANGENT

PSS-60-28-20SL

DOTD LOUISIANA DEPARTMENT OF TRANSPORTATION & DEVELOPMENT

STANDARD PLAN

FOR INFORMATIONAL USE

11/20/2025 14:11
IP_PWP:d1246416\SS6028altspan1(LRFD).dgn

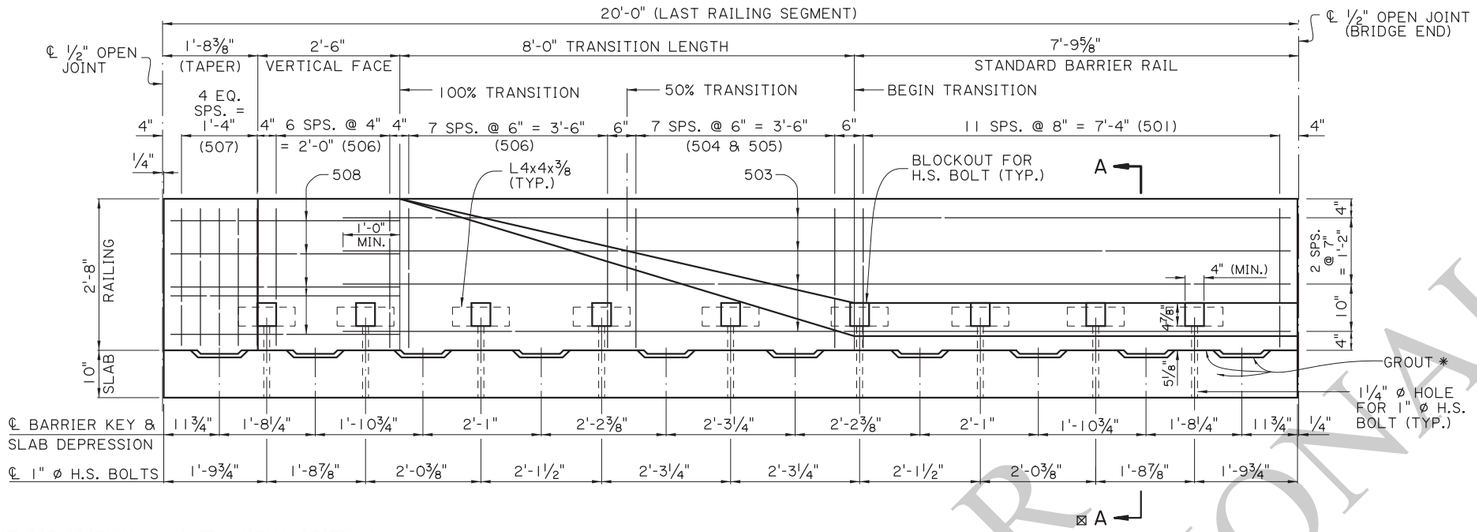

⊠ FOR SECTION A-A & TRANSITION SECTIONS SEE ALTERNATE SPAN (3 OF4)

PRECAST BARRIER RAILING TRANSITION ELEVATION

(SHOWING BARRIER RAILING AT END OF BRIDGE)
SCALE: ¾" = 1'-0"

* PLACE OR INJECT NON-SHRINK GROUT AS REQUIRED IN BETWEEN SLAB DEPRESSIONS TO FILL ALL VOIDS AND GAPS FOR FULL EVEN BEARING OF THE BARRIER ON THE SLAB. SEE NOTE 3, SHEET 9 OF 11.

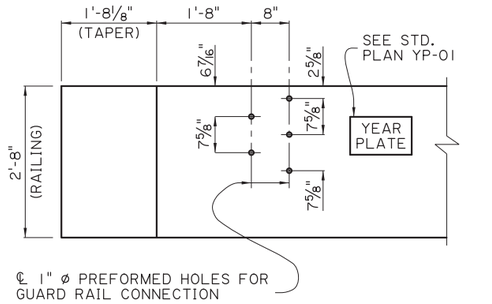

GUARD RAIL CONNECTION DETAIL

CONFORM TO GUARD RAIL STANDARD PLANS
SCALE: ¾" = 1'-0"

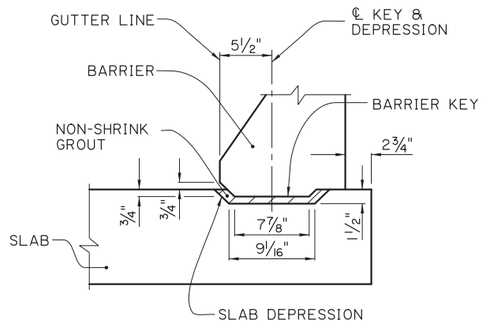

ELEVATION

SCALE: 1½" = 1'-0"

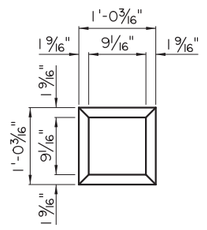

PLAN-DEPRESSION

SCALE: 1" = 1'-0"

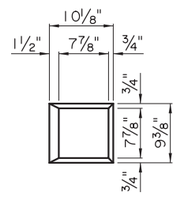

PLAN-KEY

SCALE: 1" = 1'-0"

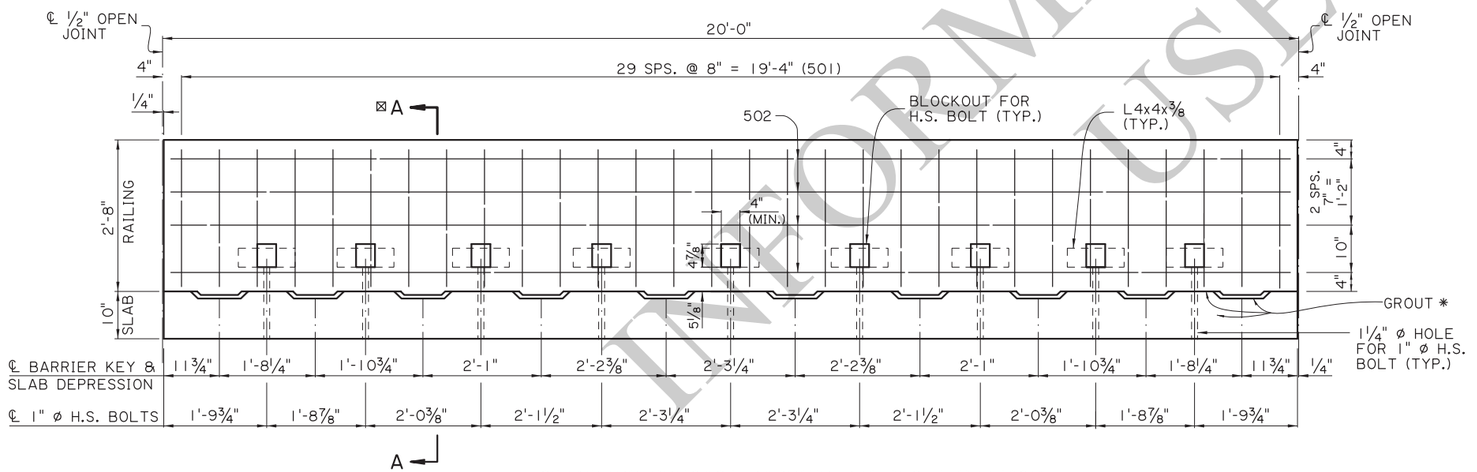

STANDARD PRECAST BARRIER RAILING ELEVATION

(SHOWING BARRIER RAILING ALONG BRIDGE SLAB)
SCALE: ¾" = 1'-0"

BARRIER KEY AND PANEL DEPRESSION DETAILS

FOR INFORMATIONAL USE

SHEET NUMBER

PARISH | CONTROL SECTION | STATE PROJECT

DESIGN B. DELATTE | CHECK J. NAKHLEH | DETAIL D. HYMEL | CHECK J. NAKHLEH | REVIEW | SERIES # 8 OF 11

APPROVED BY CHIEF ENGINEER: DATE: 12/10/2025

REVISION OR CHANGE ORDER DESCRIPTION | BY | NO. | DATE

STATE OF LOUISIANA

ALTERNATE SPAN (2 OF 4)
20'-0" PRECAST CONC. BARRIER
28'-0" CLEAR ROADWAY
60° CROSSING TWO WAY TANGENT
PSS-60-28-20SL

DOTD LOUISIANA DEPARTMENT OF TRANSPORTATION & DEVELOPMENT

STANDARD PLAN

11/20/2025 14:1:
IP_PWP:d1246416\SS6028altspan2(LRFD).dgn

11/20/2025 14:1-

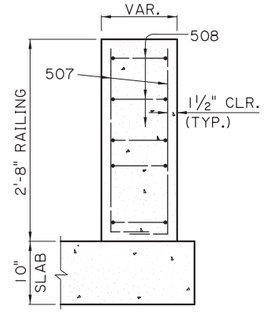

TAPER

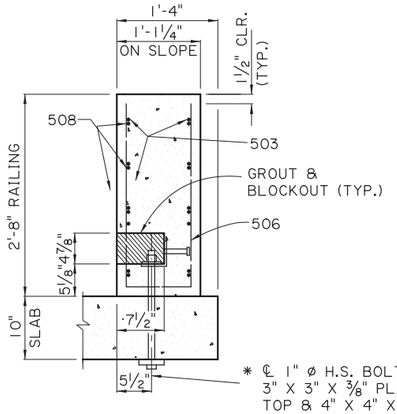

100% TRANSITION

* ℄ 1" ø H.S. BOLT, AND 3" X 3" X ⅜" PLATE WASHER TOP & 4" X 4" X ⅞" PLATE WASHER BOTTOM, AND ONE HEAVY HEX NUT (TYP.).

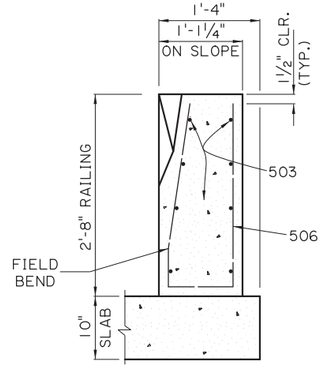

50% TRANSITION

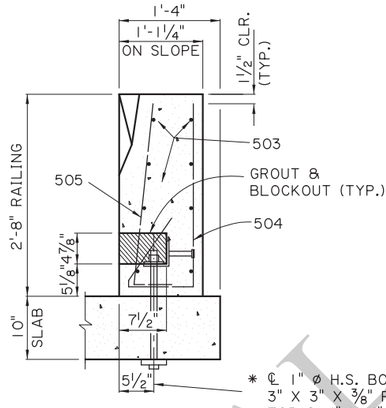

50% TRANSITION

* ℄ 1" ø H.S. BOLT, AND 3" X 3" X ⅜" PLATE WASHER TOP & 4" X 4" X ⅞" PLATE WASHER BOTTOM, AND ONE HEAVY HEX NUT (TYP.).

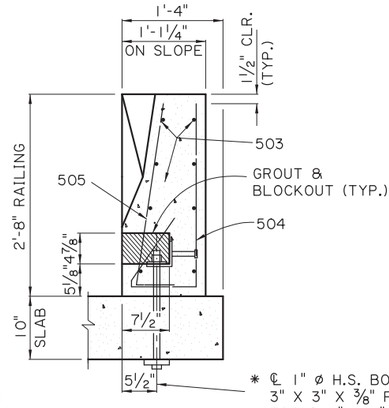

BEGIN TRANSITION

* ℄ 1" ø H.S. BOLT, AND 3" X 3" X ⅜" PLATE WASHER TOP & 4" X 4" X ⅞" PLATE WASHER BOTTOM, AND ONE HEAVY HEX NUT (TYP.).

BARRIER RAILING TRANSITION SECTIONS

SCALE: 1" = 1'-0"

* 1" ø THREADED STUD OF EQUAL STRENGTH, WITH 2 NUTS & 2 WASHERS, MAY BE USED IN LIEU OF H.S. BOLTS.

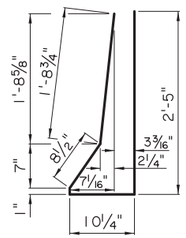

501
(2½" ø PIN)

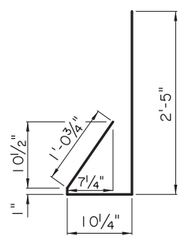

504
(2½" ø PIN)

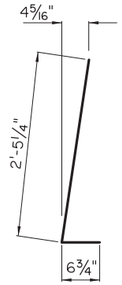

505
(2½" ø PIN)

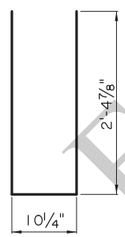

506
(2½" ø PIN)

507
(2½" ø PIN)

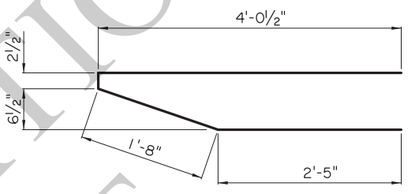

508
(2½" ø PIN)

NOTES:

1) ALL BARRIER RAIL SURFACES ARE TO RECEIVE A CLASS 3 SPECIAL SURFACE FINISH.

2) ALL SURFACES OF THE BLOCKOUTS EXCEPT THE BOTTOM MAY BE TAPERED AND ALL CORNERS MAY BE ROUNDED TO A RADIUS TO ALLOW FOR EASY REMOVAL OF PLUGS OR FORMS. AFTER PLACING AND TIGHTENING THE ANCHOR BOLTS, THE BLOCKOUTS SHALL BE FILLED WITH AN APPROVED NON-SHRINK GROUT FROM AML AND TROWELED TO THE REQUIRED FINISH AND TO THE SATISFACTION OF THE ENGINEER.

3) AFTER BARRIER IS PLACED AND ALIGNED, ALL GAPS UNDER BARRIER AND TOP OF SLAB SHALL BE FILLED WITH NON-SHRINK GROUT FROM AML AND ALLOWED TO SET PRIOR TO TIGHTENING OF BOLTS. IT IS IMPORTANT TO FILL ALL VOIDS AND GAPS UNDER THE BARRIER TO ENSURE EVEN BEARING ON DECK WHEN THE ANCHOR BOLTS ARE LOADED.

4) ALL 1" ø BOLTS SHALL BE HIGH STRENGTH A325 OR APPROVED EQUAL. BOLT, NUT & WASHER TO BE GALVANIZED AS PER ASTM A-153. BOLTS SHALL BE TENSIONED TO 36 KIPS, OR APPROXIMATELY 540 FOOT-LB. OF TORQUE (LUBRICATED CONNECTION).

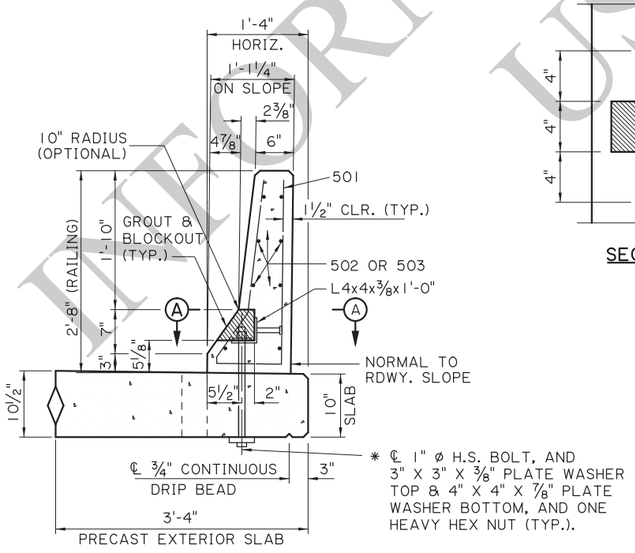

* ℄ 1" ø H.S. BOLT, AND 3" X 3" X ⅜" PLATE WASHER TOP & 4" X 4" X ⅞" PLATE WASHER BOTTOM, AND ONE HEAVY HEX NUT (TYP.).

SECTION A-A
SCALE: 1" = 1'-0"

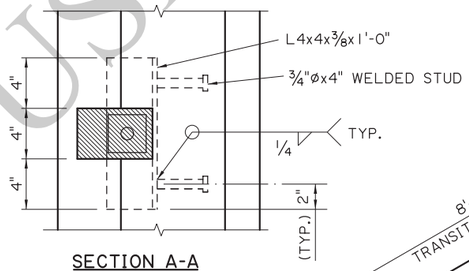

SECTION A-A

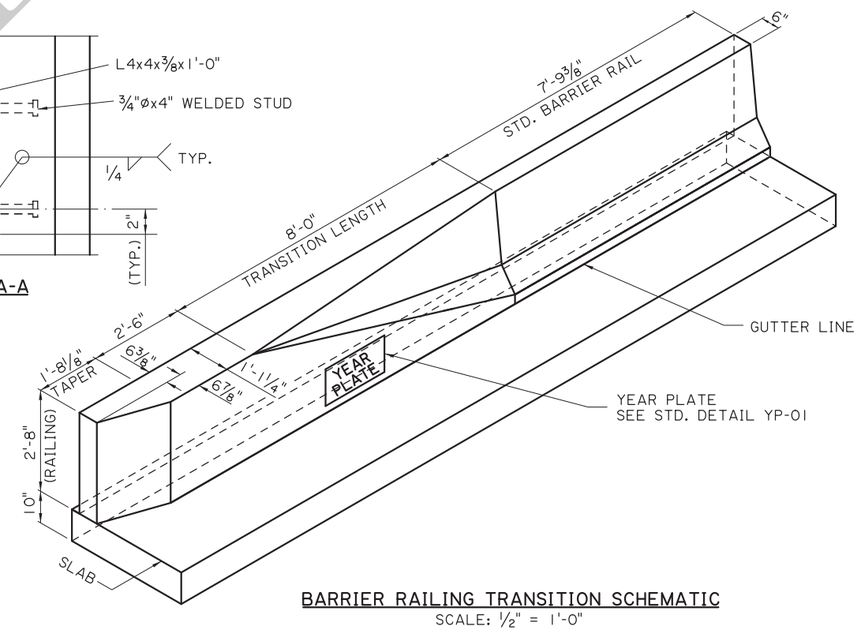

BARRIER RAILING TRANSITION SCHEMATIC
SCALE: ½" = 1'-0"

FOR INFORMATIONAL USE

SHEET NUMBER		
PARISH	CONTROL SECTION	STATE PROJECT
DESIGN B. DELATTE / CHECK J. NAKHLEH	DETAIL D. HYMEL / CHECK J. NAKHLEH	REVIEW / SERIES # 9 OF 11

APPROVED BY CHIEF ENGINEER: DATE: 12/10/2025

NO.	DATE	REVISION OR CHANGE ORDER DESCRIPTION	BY

ALTERNATE SPAN (3 OF 4)
20'-0" PRECAST CONC. BARRIER
28'-0" CLEAR ROADWAY
60° CROSSING TWO WAY TANGENT

PSS-60-28-20SL

DOTD LOUISIANA DEPARTMENT OF TRANSPORTATION & DEVELOPMENT

STANDARD PLAN

IP_PWP:d1246416\SS6028altspan3(LRFD).dgn

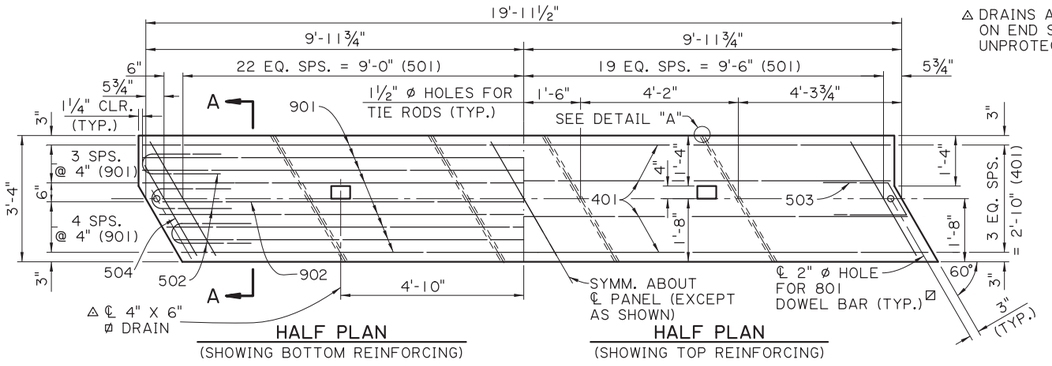

EXTERIOR UNIT
SCALE ½" = 1'-0"

△ DRAINS ARE NOT REQUIRED ON END SPANS OVER UNPROTECTED SLOPES.

▨ HOLES ARE OPTIONAL AT EXPANSION ENDS.

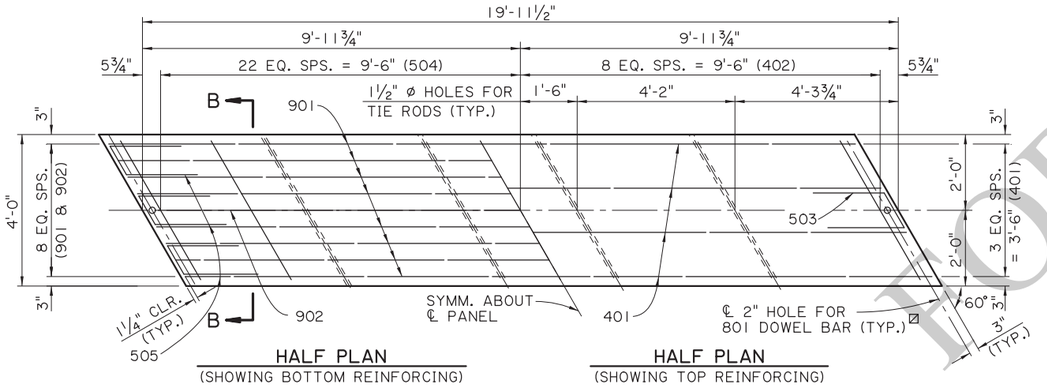

INTERIOR UNIT
SCALE ½" = 1'-0"

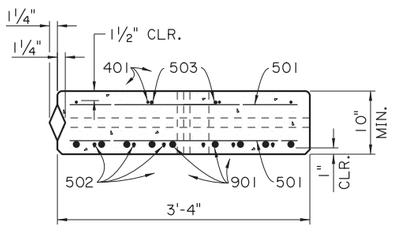

SECTION A-A
EXTERIOR UNIT
SCALE 1" = 1'-0"

NOTE:
FOR EACH SPAN, ONE EXTERIOR UNIT WILL HAVE A TONGUE AND ONE WILL HAVE A GROOVE.

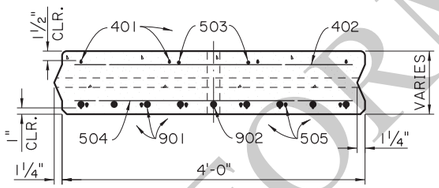

SECTION B-B
INTERIOR UNIT
SCALE 1" = 1'-0"

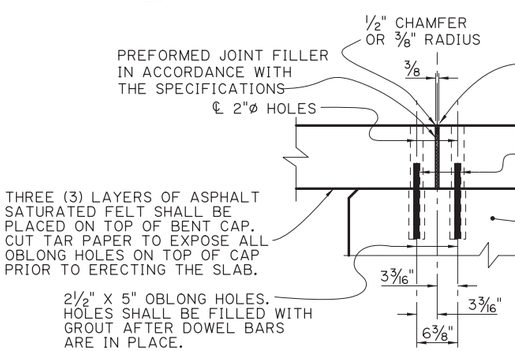

TYPICAL JOINT DETAIL
SCALE 1" = 1'-0"

NOTES:
FOR ADDITIONAL JOINT DETAILS SEE SHEET 2 OF 11.
FOR ½" CHAMFER DETAIL, SEE DETAIL "B", ALTERNATE SPAN 1 OF 4.

AS-DESIGNED RATING		
VEHICLE	RATING FACTOR	NOTES
HL-93 (INV)	1.561	——
HL-93 (OPR)	2.023	——
LADV-11 (INV)	1.200	MAGNIFICATION FACTOR = 1.3

ALTERNATE SPAN NOTES:

DESIGN SPECIFICATIONS: AASHTO LRFD BRIDGE DESIGN SPECIFICATIONS, 4th EDITION, WITH 2008 & 2009 INTERIMS.

DESIGN LOAD: THE BRIDGE DECK IS DESIGNED FOR A FUTURE WEARING COURSE OF 19 PSF. THE LIVE LOAD IS HL-93, AND LADV-11 (LOUISIANA DESIGN VEHICLE LIVE LOAD 2011).

STRUCTURAL CONCRETE: ALL CONCRETE SHALL BE CLASS P1. THE BRIDGE RAIL CONCRETE SHALL BE CLASS A1 IF RAIL IS CAST IN PLACE. STEEL SIDE FORMS AND STEEL OR CONCRETE BOTTOM FORMS SHALL BE USED FOR PRECAST COMPONENTS. EXPOSED EDGES SHALL HAVE A ¾" CHAMFER, UNLESS SPECIFIED OTHERWISE. ALL SURFACES SHALL RECEIVE A CLASS 1 ORDINARY SURFACE FINISH UPON REMOVAL OF THE FORMS. THE FINAL FINISH SHALL BE A TINE FINSIH IN ACCORDANCE WITH THE SPECIFICATIONS.

REINFORCING STEEL: ALL REINFORCING STEEL SHALL BE GRADE 60. DIMENSIONS RELATING TO FABRICATION ARE OUT TO OUT OF BARS, UNLESS SPECIFIED OTHERWISE. DIMENSIONS RELATING TO SPACING ARE TO BAR CENTERS, UNLESS SPECIFIED OTHERWISE. ALL REINFORCING BARS SHALL BE PLACED TO PROVIDE A MINIMUMUM COVER OF 1" FROM THE DRAIN HOLES. REINFORCING STEEL MAY BE TACK WELDED FOR A DISTANCE OF NOT MORE THAN 4'-0" FROM EACH END OF UNIT. NO OTHER WELDING SHALL BE PERMITTED.

MISCELLANEOUS STEEL: HIGH STRENGTH BOLTS SHALL CONFORM TO ASTM DESIGNATION A-325. PRESTRESSING STRANDS SHALL CONFORM TO ASTM DESIGNATION A-416, GRADE 270. PLATES, TIE RODS, AND DRIFT BOLTS SHALL CONFORM TO ASTM DESIGNATION A709, GRADE 36. STEEL SPECIFIED TO BE ZINC COATED SHALL BE IN CONFORMANCE WITH ASTM DESIGNATION A-123.

GROUT: THE GROUT SHALL BE AN APPROVED FLOWABLE NON-SHRINK GROUT LISTED ON AML. THE GROUT SHALL BE TESTED FOR ACCEPTANCE PRIOR TO USAGE. THE GROUT SHALL ATTAIN A MINIMUM COMPRESSIVE STRENGTH OF 3500 PSI PRIOR TO LOADING SLABS. SURFACES SHALL BE THOROUGHLY SATURATED WITH WATER BY FLOODING THE HOLES FOR APPROXIMATELY FIVE (5) MINUTES IMMEDIATELY BEFORE THE GROUT IS PLACED. ONLY POTABLE WATER SHALL BE USED FOR SATURATION AND MIXING PURPOSES.

PATCHING MATERIAL: THE PATCHING MATERIAL SHALL BE AN APPROVED PATCHING MATERIAL FOR PRECAST OR PRESTREESED CONCRETE PRODUCTS LISTED ON AML. SURFACE PREPARATION, MIXING AND PLACMENT SHALL BE IN ACCORDANCE WITH THE MANUFACTURERS' RECOMMENDATIONS. ONLY POTABLE WATER SHALL BE USED FOR SATURATION AND MIXING PURPOSES.

PRECAST UNITS: THE PLANS FOR AN ONGOING OPERATION OF FABRICATION FACILITIES SHALL BE APPROVED BY THE DEPARTMENT. EACH UNIT SHALL HAVE "LIVE LOAD HL-93 AND LADV-11", THE FABRICATOR'S MARK, AND UNIQUE NUMBER, MEETING THE APPROVAL OF THE ENGINEER STAMPED OR INSCRIBED IN THE PLASTIC CONCRETE. PRECAST UNITS MAY BE CAST WITH OR WITHOUT CAMBER. IF CAMBER IS PROVIDED IT SHALL NOT EXCEED ¼" AT THE CENTERLINE OF SPAN. ALL UNITS SHALL BE HELD AT THE PLANT FOR A MINIMUM OF TEN(10) DAYS AFTER CASTING. THE CONCRETE SHALL REACH A MINIMUM STRENGTH OF 3,000 PSI BEFORE HANDLING IS PERMITTED. THE LIFTING INSERTS SHALL BE 1", TYPE S INSERTS AS MANUFACTURED BY DAYTON-SUPERIOR CORPORATION OR AN APPROVED EQUAL. EACH INSERT SHALL HAVE A MINIMUM LOAD CAPACITY OF 10,000 POUNDS . FOUR(4) INSERTS WITH 1" ø X 5" LONG COIL BOLTS SHALL BE PLACED IN THE TOP OF THE UNIT AND LOCATED 1'-3" FROM ITS ENDS AND 1'-0" FROM ITS EDGES. INSERT HOLES SHALL BE GROUT FILLED AFTER PLACEMENT OF UNIT. AT THE CONTRACTOR'S OPTION A SLING OF SUFFICIENT CAPACITY MAY BE USED FOR LIFTING, PROVIDED THE SAME PICKUP LOCATION FROM THE ENDS ARE USED. FABRICATION TOLERANCES SHALL BE AS FOLLOWS:

UNIT DEPTH	± 3/16"
UNIT LENGTH	+ ⅛" AND -½"
OVERALL SPAN WIDTH	± 2"

ALL PRECAST UNITS IN EACH BRIDGE SPAN SHALL BE MATCH CAST IN THE SAME CASTING BED TO ENSURE A PROPER FIT DURING INSTALLATION.

GUARDRAIL: CONFORM TO PROJECT PLANS AND GUARD RAIL STANDARD PLANS.

BASIS OF PAYMENT: ALL WORK WILL BE PAID FOR UNDER THE DESIGNATED BRIDGE SUPERSTRUCTURE AND SUBSTRUCTURE PAY ITEM AND IN ACCORDANCE WITH THE SPECIFICATIONS.

ESTIMATED QUANTITIES (ONE EXTERIOR UNIT)				
BAR	NO.	UNIT LENGTH	TOTAL LENGTH	LOCATION
901	8	19'-9"	158'-0"	LONGIT. BOT. OF SLAB
902	1	19'-1"	19'-1"	LONGIT. BOT. OF SLAB
TOTAL NO. 9 BARS = 177'-1" = 602 LBS.				
801	1	1'-0"	1'-0"	DOWELS
TOTAL NO. 8 BARS = 1'-0" = 3 LBS.				
501	84	3'-5"	287'-0"	TRANS. TOP & BOT. OF SLAB
502	6	4'-6"	27'-0"	BOT. END OF SLAB
503	2	4'-9"	9'-6"	TOP END OF SLAB
504	2	2'-8"	5'-4"	TRANS. TOP & BOT. OF SLAB
TOTAL NO. 5 BARS = 328'-10" = 343 LBS.				
401	4	19'-9"	79'-0"	LONGIT. TOP OF SLAB
TOTAL NO. 4 BARS = 79'-0" = 53 LBS.				
DEFORMED REINFORCING STEEL = 1001 LBS.				
⊙ CLASS P1 CONCRETE = 2.05 CU. YDS.				
CONCRETE RAILING (PER SPAN) = 40.00 LIN. FT.				

ESTIMATED QUANTITIES (ONE INTERIOR UNIT)				
BAR	NO.	UNIT LENGTH	TOTAL LENGTH	LOCATION
901	8	19'-9"	158'-0"	LONGIT. BOT. OF SLAB
902	1	19'-1"	19'-1"	LONGIT. BOT. OF SLAB
TOTAL NO. 9 BARS = 177'-1" = 602 LBS.				
801	1	1'-0"	1'-0"	DOWELS
TOTAL NO. 8 BARS = 1'-0" = 3 LBS.				
503	2	4'-9"	9'-6"	TOP END OF SLAB
504	45	4'-2"	187'-6"	TRANS. BOT. OF SLAB
505	6	4'-7"	27'-6"	BOT. END OF SLAB
TOTAL NO. 5 BARS = 224'-6" = 235 LBS.				
401	4	19'-9"	79'-0"	LONGIT. TOP OF SLAB
402	17	4'-2"	70'-10"	TRANS. TOP OF SLAB
TOTAL NO. 4 BARS = 149'-10" = 100 LBS.				
DEFORMED REINFORCING STEEL = 940 LBS.				
⊙ CLASS P1 CONCRETE = 2.46 CU. YDS.				

⊙ BASED ON A 10" SLAB THICKNESS

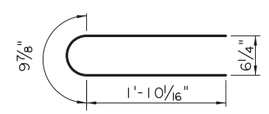

502
5 " ø PIN

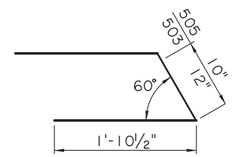

503 & 505
2½" ø PIN

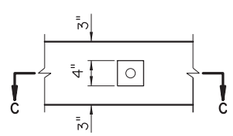

END VIEW

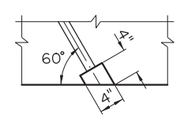

SECTION C-C

DETAIL "A"
TYP. EXTERIOUR EDGE ONLY
SCALE 1" = 1'-0"

SHEET NUMBER

PARISH | CONTROL SECTION | STATE PROJECT

DESIGN J. NAKHLEH | B. DELATTE
DETAIL D. HYMEL | J. NAKHLEH
CHECK | REVIEW
SERIES # 10 OF 11

APPROVED BY CHIEF ENGINEER:
DATE: 12/10/2025

REVISION OR CHANGE ORDER DESCRIPTION | BY | DATE | NO.

ALTERNATE SPAN (4 OF 4)
DRAWING TYPE
28'-0" CLEAR ROADWAY
60° CROSSING TWO WAY TANGENT

PSS-60-28-20SL

LOUISIANA DEPARTMENT OF TRANSPORTATION & DEVELOPMENT

STANDARD PLAN

INFORMATIONAL COPY

11/25/2025 09:5
IP_PWP:d1246416\SS6028altspan4(LRFD).dgn

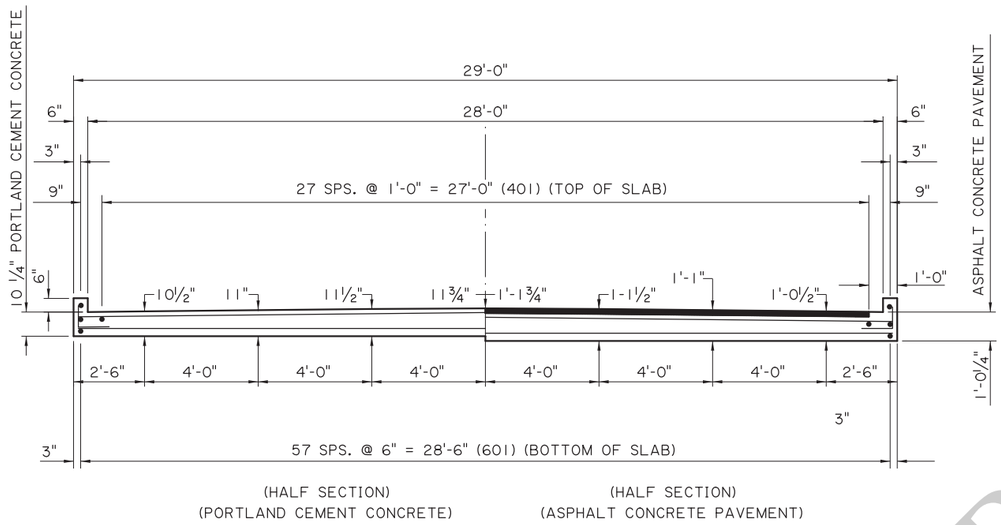

(HALF SECTION)
(PORTLAND CEMENT CONCRETE)

(HALF SECTION)
(ASPHALT CONCRETE PAVEMENT)

SECTION A-A
SCALE 3/8" = 1'-0"

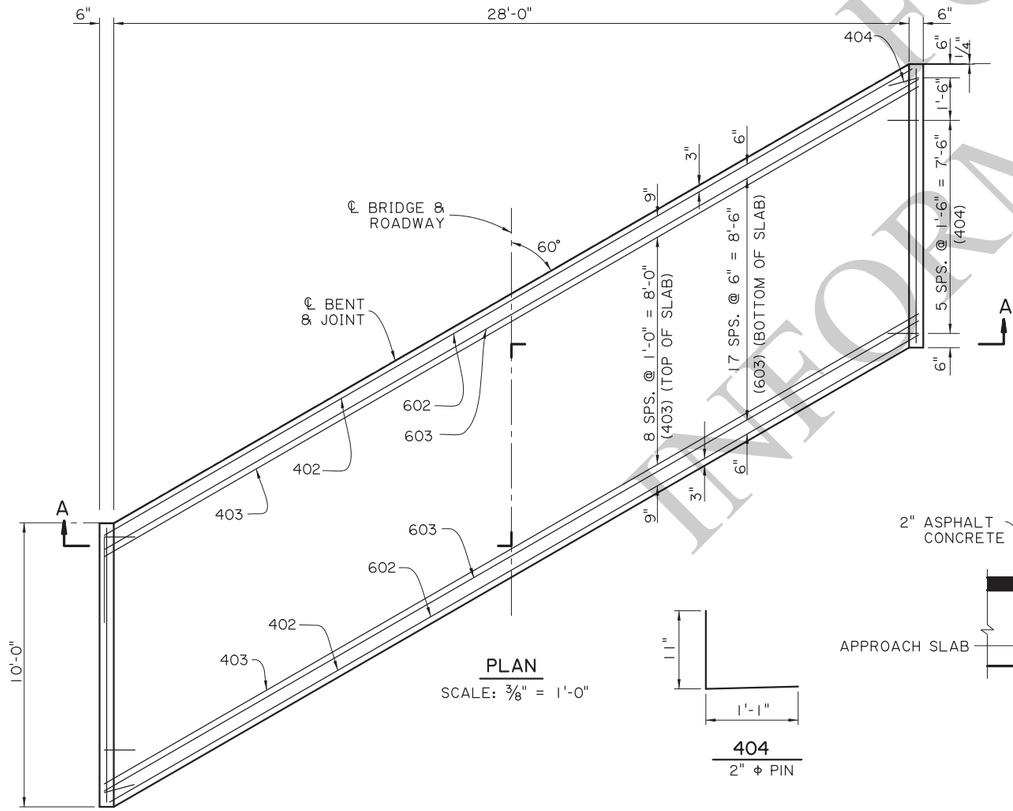

PLAN
SCALE: 3/8" = 1'-0"

404
2" ϕ PIN

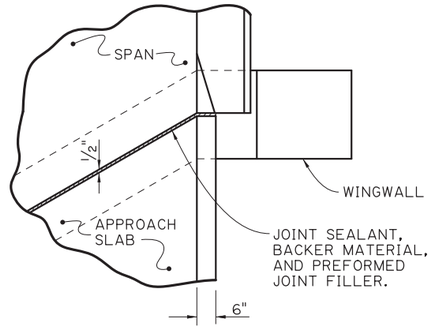

JOINT DETAIL
N.T.S.

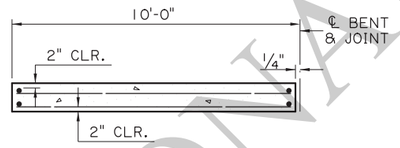

(FOR PORTLAND CEMENT CONCRETE ROADWAY PAVEMENT)

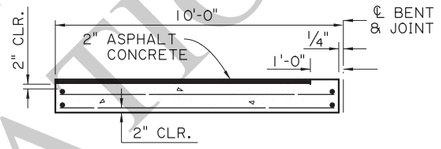

(FOR ASPHALT CONCRETE ROADWAY PAVEMENT)

SECTION ALONG ℄ ROADWAY
SCALE : 1/4" = 1'-0"

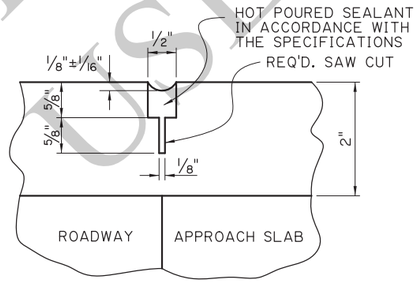

SAWING & SEALING JOINT DETAIL
N.T.S.

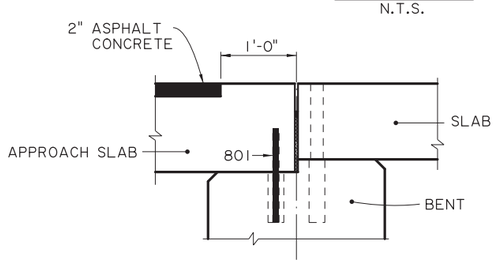

DETAIL A
SCALE : 1" = 1'-0"
(ASPHALT CONCRETE PAVEMENT OPTION)

ESTIMATED QUANTITIES (ONE SLAB)				
BAR	NO.	UNIT LENGTH	TOTAL LENGTH	LOCATION
801	8	1'-2"	9'-4"	DOWELS
TOTAL NO. 8 BARS = 9'-4" = 25 LBS.				
601	58	9'-6"	551'-0"	LONGIT. BOT. OF SLAB
602	2	32'-10"	65'-8"	TRANSV. BOT. OF SLAB
603	18	33'-1"	595'-6"	TRANSV. BOT. OF SLAB
TOTAL NO. 6 BARS = 1,212'-2" = 1,821 LBS.				
401	32	9'-7"	306'-8"	LONGIT. TOP OF SLAB & CURB
402	2	32'-10"	65'-8"	TRANSV. TOP OF SLAB
403	9	33'-1"	297'-9"	TRANSV. TOP OF SLAB
404	14	1'-10"	25'-8"	DOWELS IN CURB
TOTAL NO. 4 BARS = 695'-9" = 465 LBS.				
⊙ TOTAL DEFORMED REINFORCING STEEL = 2,311 LBS.				
CONCRETE APPROACH SLAB = 32.22 SQ. YDS.				
⊙⊠ ASPHALT CONCRETE = 3.0 TONS				
⊙⊠ SAW CUT & SEAL = 31 LIN. FT.				

⊙ TO BE PAID FOR UNDER ITEM CONCRETE APPROACH SLABS.
⊠ REQUIRED WHEN APPROACH SLAB IS ADJACENT TO ASPHALT CONCRETE PAVEMENT.

APPROACH SLAB NOTES:

DESIGN SPECIFICATIONS: AASHTO LRFD BRIDGE DESIGN SPECIFICATIONS, 4th EDITION, WITH 2008 & 2009 INTERIMS.

STRUCTURAL CONCRETE: ALL CONCRETE SHALL BE CLASS A1. EXPOSED EDGES SHALL HAVE A 3/4" CHAMFER, UNLESS SPECIFIED OTHERWISE.

REINFORCING STEEL: ALL REINFORCING STEEL SHALL BE GRADE 60. DIMENSIONS RELATING TO THE FABRICATION ARE OUT-TO-OUT OF BARS, UNLESS OTHERWISE NOTED. DIMENSIONS RELATING TO SPACING ARE TO BAR CENTERS, UNLESS SPECIFIED OTHERWISE.

BEDDING MATERIAL: FOR DETAILS OF BEDDING MATERIAL AND UNDERDRAINS SEE APPROACH SLAB STANDARD DETAILS.

SAWING & SEALING: THE ASPHALT CONCRETE SHALL BE SAW CUT AT THE END OF THE CONCRETE APPROACH SLAB THE ENTIRE ROADWAY WIDTH AND SEALED WHICH WILL BE PAID FOR UNDER THE DESIGNATED ROADWAY PAY ITEM.

PAYMENT: ALL OTHER WORK WILL BE PAID FOR UNDER THE DESIGNATED BRIDGE CONCRETE APPROACH SLAB PAY ITEM AND IN ACCORDANCE WITH THE SPECIFICATIONS.

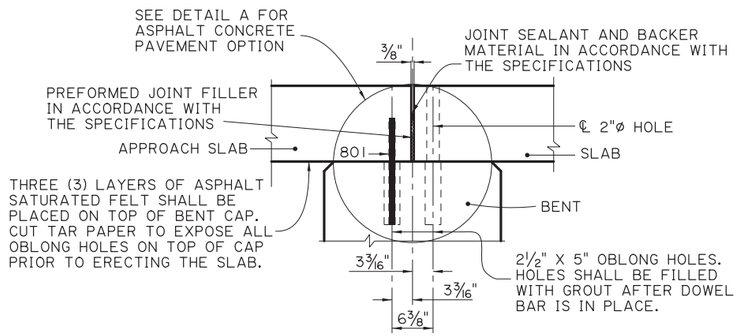

TYPICAL JOINT DETAIL
SCALE : 1" = 1'-0"

NOTE: FOR ADDITIONAL JOINT DETAILS SEE SHEET 2 OF 11

FOR INFORMATIONAL USE

SHEET NUMBER

PARISH	CONTROL SECTION	STATE PROJECT

DESIGN	B. DELATTE
CHECK	J. NAKHLEH
DETAIL	D. HYMEL
CHECK	J. NAKHLEH
REVIEW	SERIES # 11 OF 11

APPROVED BY CHIEF ENGINEER: DATE: 12/10/2025

NO.	DATE	REVISION OR CHANGE ORDER DESCRIPTION	BY

ALTERNATE APPROACH SLAB
10'-0" CAST-IN-PLACE
28'-0" CLEAR ROADWAY
60° CROSSING TWO WAY TANGENT

PSS-60-28-20SL

DOTD LOUISIANA DEPARTMENT OF TRANSPORTATION & DEVELOPMENT

STANDARD PLAN

11/25/2025 09:5

IP_PWP:d1246416\SS6028altaprslab(LRFD).dgn

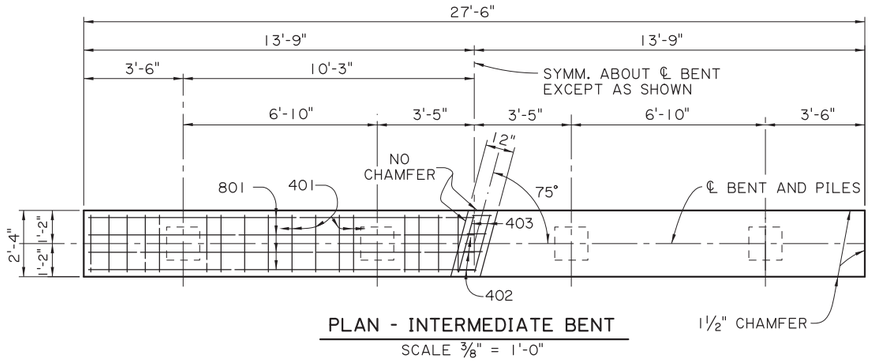

PLAN - INTERMEDIATE BENT

SCALE ⅜" = 1'-0"

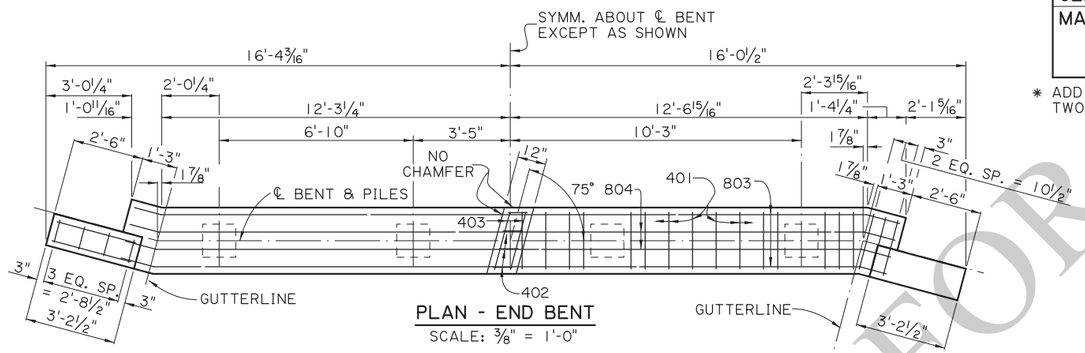

PLAN - END BENT

SCALE: ⅜" = 1'-0"

ESTIMATED QUANTITIES (ONE INTER. BENT)				
BAR	NO.	UNIT LENGTH	TOTAL LENGTH	LOCATION
801	6	27'-2"	163'-0"	LONGIT. IN CAP
802	6	7'-8"	46'-0"	LONGIT. IN CAP
TOTAL NO. 8 BARS = 209'-0" = 558 LBS.				
601	17	2'-0"	34'-0"	DOWELS
TOTAL NO. 6 BARS = 34'-0" = 51 LBS.				
501	2	27'-2"	54'-4"	LONGIT. IN CAP
TOTAL NO. 5 BARS = 54'-4" = 57 LBS.				
401	34	8'-2"	277'-8"	STIRRUPS IN CAP
402	4	3'-4"	13'-4"	STIRRUPS IN RISER
403	2	2'-1"	4'-2"	LONGIT. IN RISER
TOTAL NO. 4 BARS = 295'-2" = 197 LBS.				
* TOTAL DEFORMED REINFORCING STEEL = 863 LBS.				
⊖ CLASS A1 CONCRETE = 4.59 CU. YDS.				
MAX. PILE LOAD: SERVICE DEAD LOAD = 18 TONS SERVICE LIVE LOAD = 30 TONS FACTORED TOTAL LOAD = 67 TONS				

* ADD 51 LBS. OF REINFORCING STEEL (17-601 DOWELS) WHEN TWO FIXED ENDS OCCUR ON THE SAME BENT.

ESTIMATED QUANTITIES (ONE END BENT)				
BAR	NO.	UNIT LENGTH	TOTAL LENGTH	LOCATION
802	6	7'-8"	46'-0"	LONGIT. IN CAP
803	4	26'-11"	107'-8"	LONGIT. IN CAP
804	2	26'-11"	53'-10"	LONGIT. IN CAP
TOTAL NO. 8 BARS = 207'-6" = 554 LBS.				
601	17	2'-0"	34'-0"	DOWELS
TOTAL NO. 6 BARS = 34'-0" = 51 LBS.				
502	2	26'-11"	53'-10"	LONGIT. IN CAP
TOTAL NO. 5 BARS = 53'-10" = 56 LBS.				
401	36	8'-2"	294'-0"	STIRRUPS IN CAP
402	4	3'-4"	13'-4"	STIRRUPS IN RISER
403	2	2'-1"	4'-2"	LONGIT. IN RISER
404	8	8'-9"	70'-0"	STIRRUPS IN WINGWALL
405	8	2'-10"	22'-8"	LONGIT. IN WINGWALL
406	12	4'-0"	48'-0"	LONGIT. IN WINGWALL
TOTAL NO. 4 BARS = 452'-2" = 302 LBS.				
TOTAL DEFORMED REINFORCING STEEL = 963 LBS.				
⊖ CLASS A1 CONCRETE = 5.38 CU. YDS.				
MAX. PILE LOAD: SERVICE DEAD LOAD = 18 TONS SERVICE LIVE LOAD = 30 TONS FACTORED TOTAL LOAD = 67 TONS				

⊖ 16" ø PPC PILES USED FOR ESTIMATING PURPOSES ONLY. (ADD 0.04 CU. YDS. OF CLASS A1 CONCRETE PER BENT WHEN 14" ø PPC PILES ARE USED.)

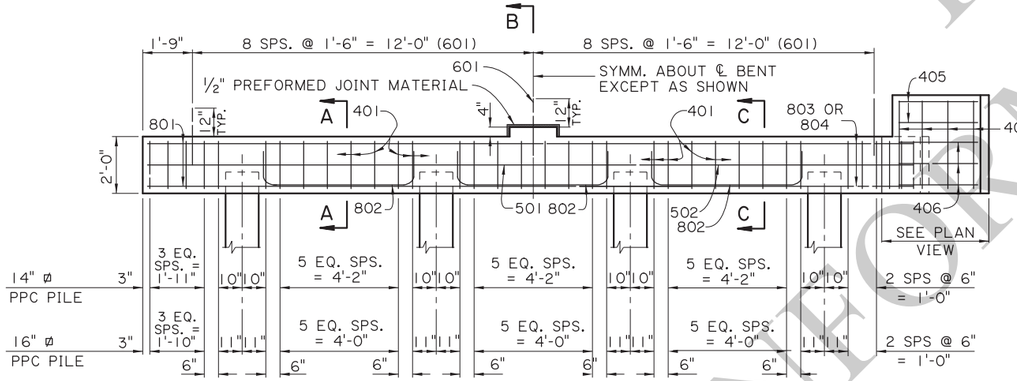

HALF ELEVATION - INTERMEDIATE BENT

SCALE ⅜" = 1'-0"

HALF ELEVATION - END BENT

SCALE ⅜" = 1'-0"

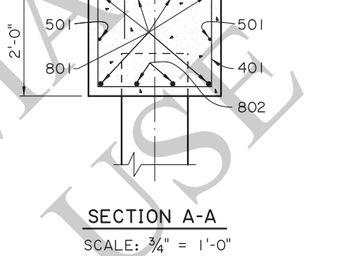

SECTION A-A

SCALE: ¾" = 1'-0"

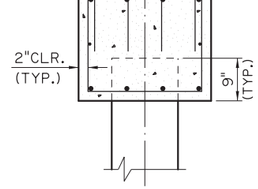

SECTION B-B

SCALE: ¾" = 1'-0"

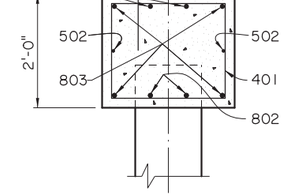

SECTION C-C

SCALE: ¾" = 1'-0"

AS-DESIGNED RATING		
VEHICLE	RATING FACTOR	NOTES
HL-93 (INV)	1.365	——
HL-93 (OPR)	1.770	——
LADV-11 (INV)	1.050	MAGNIFICATION FACTOR = 1.3

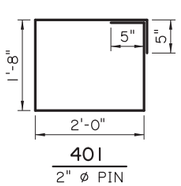

401
2" ø PIN

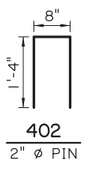

402
2" ø PIN

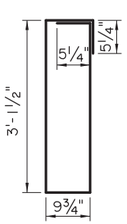

404
2" ø PIN

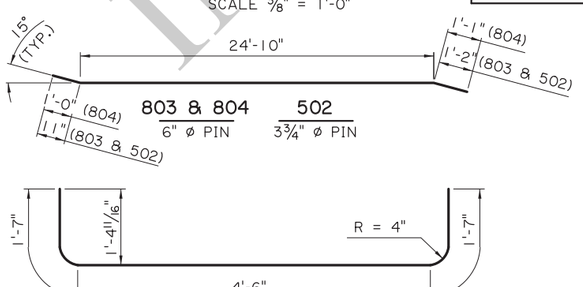

802
6" ø PIN

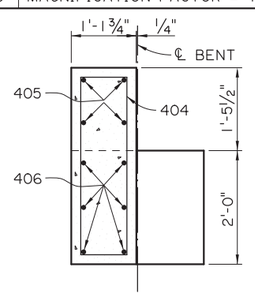

END ELEVATION

SCALE ¾" = 1'-0"

NOTES:

DESIGN SPECIFICATIONS: AASHTO LRFD BRIDGE DESIGN SPECIFICATIONS, 4th EDITION, WITH 2008 & 2009 INTERIMS.

DESIGN LOAD: LIVE LOAD IS HL-93, AND LADV-11 (LOUISIANA DESIGN VEHICLE LIVE LOAD 2011).

STRUCTURAL CONCRETE: ALL CONCRETE SHALL BE CLASS A1. EXPOSED EDGES SHALL HAVE A ¾" CHAMFER UNLESS SPECIFIED OTHERWISE. ALL EXPOSED FACES OF WINGWALLS AND ENDS OF CAPS SHALL RECEIVE A SURFACE FINISH AS PER THE SPECIFICATIONS, UNLESS SPECIFIED OTHERWISE.

REINFORCING STEEL: ALL REINFORCING SHALL BE GRADE 60. DIMENSIONS RELATING TO FABRICATION ARE OUT TO OUT OF BARS, UNLESS SPECIFIED OTHERWISE. DIMENSIONS RELATING TO SPACING ARE TO BAR CENTERS, UNLESS SPECIFIED OTHERWISE. DOWELS (601 BARS) SHALL BE PROVIDED AT ALL FIXED BEARINGS AND APPROACH SLAB BEARINGS. ALL EXPOSED ENDS OF DOWELS SHALL BE WRAPPED WITH TWO LAYERS OF 15 LB. ASPHALT SATURATED FELT. CLOSE FITTING TUBES OF COMPRESSIBLE MATERIAL NOT LESS THAN ⅜" THICK MAY BE SUBSTITUTED.

PRECAST CONCRETE PILES: CONFORM TO PILE STANDARD PLAN AND PROJECT PLANS FOR FABRICATION AND INSTALLATION. PILES WILL BE PAID FOR UNDER THE DESIGNATED PILE PAY ITEMS.

PREFORMED JOINT MATERIAL: PREFORMED JOINT MATERIAL SHALL BE IN ACCORDANCE WITH SPECIFICATIONS.

PAYMENT: ALL OTHER WORK WILL BE PAID FOR UNDER THE DESIGNATED BRIDGE SUPERSTRUCTURE AND SUBSTRUCTURE PAY ITEM AND IN ACCORDANCE WITH THE SPECIFICATIONS.

FOR INFORMATIONAL USE

SHEET NUMBER

PARISH | CONTROL SECTION | STATE PROJECT

DESIGN B. DELATTE | CHECK J. NAKHLEH | DETAIL D. HYMEL | CHECK J. NAKHLEH | REVIEW | SERIES # 1 OF 11

APPROVED BY CHIEF ENGINEER: DATE: 12/10/2025

NO. | DATE | REVISION OR CHANGE ORDER DESCRIPTION | BY

BENTS
REINFORCED CONCRETE PILE BENTS
24'-0" CLEAR ROADWAY
75° CROSSING TWO WAY TANGENT

PSS-75-24-20SL

DOTD
LOUISIANA DEPARTMENT OF TRANSPORTATION & DEVELOPMENT

STANDARD PLAN

11/24/2025 16:4:

IP_PWP:d1246417\SS7524bent(LRFD).dgn

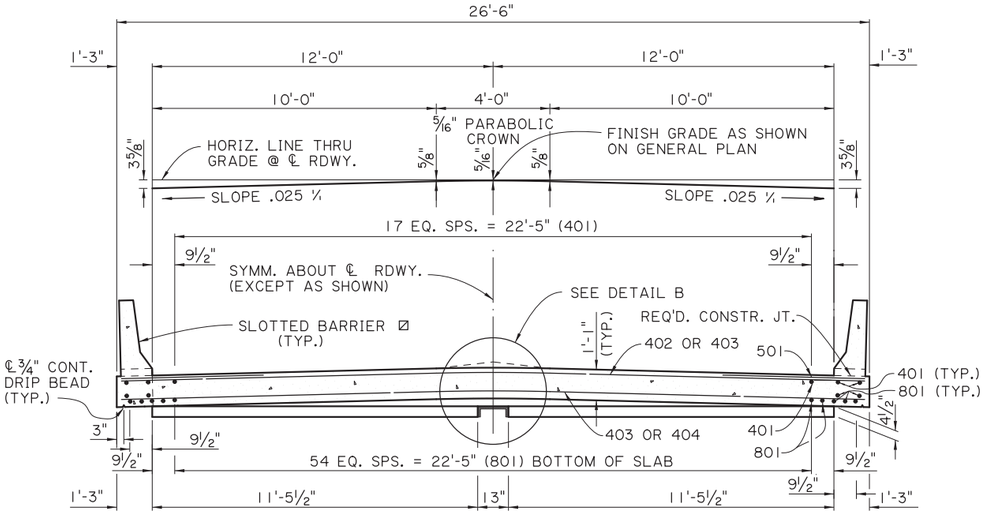

SECTION A-A
SCALE : ⅜" = 1'-0"

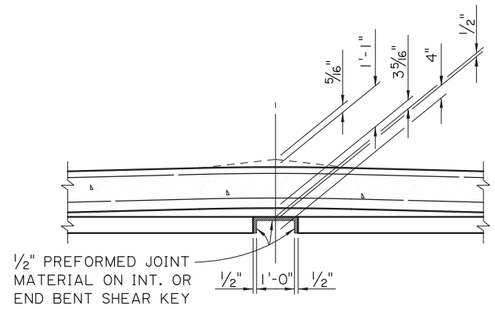

DETAIL B
SCALE : ½" = 1'-0"

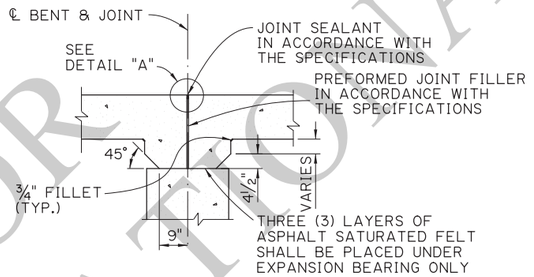

DETAIL SHOWING TYPICAL JOINT & HAUNCH
SCALE : ½" = 1'-0"

ESTIMATED QUANTITIES (ONE SPAN)				
BAR	NO.	UNIT LENGTH	TOTAL LENGTH	LOCATION
801	67	19'-7"	1312'-1"	LONGIT. BOT. OF SLAB
TOTAL NO. 8 BARS = 1312'-1" = 3503 LBS.				
501	56	5'-0"	280'-0"	TRANS. TOP OF SLAB
TOTAL NO. 5 BARS = 280'-0" = 292 LBS.				
401	22	19'-7"	430'-10"	LONGIT. TOP OF SLAB
402	4	26'-2"	104'-8"	TRANS. TOP & BOT. OF SLAB
403	52	27'-1"	1408'-4"	TRANS. TOP & BOT. OF SLAB
TOTAL NO. 4 BARS = 1943'-10" = 1298 LBS.				
TOTAL DEFORMED REINFORCING STEEL = 5120 LBS.				
CLASS A1 CONCRETE = 22.08 CU. YDS.				
CONCRETE RAILING (BARRIER TYPE) = 40.00 LIN. FT.				

SPAN NOTES:

DESIGN SPECIFICATIONS:
AASHTO LRFD BRIDGE DESIGN SPECIFICATIONS, 4th EDITION, WITH 2008 & 2009 INTERIMS.

DESIGN LOAD:
THE BRIDGE DECK IS DESIGNED FOR A FUTURE WEARING COURSE OF 19 PSF. THE LIVE LOAD IS HL-93, AND LADV-11 (LOUISIANA DESIGN VEHICLE LIVE LOAD 2011).

STRUCTURAL CONCRETE:
ALL CONCRETE SHALL BE CLASS A1. EXPOSED EDGES SHALL HAVE A ¾" CHAMFER UNLESS SPECIFIED OTHERWISE. ALL BARRIER RAIL SURFACES ARE TO RECEIVE A CLASS 3 SPECIAL FINISH.

REINFORCING STEEL:
ALL REINFORCING SHALL BE GRADE 60; DIMENSIONS RELATING TO SPACING ARE TO BAR CENTERS, DIMENSIONS RELATING TO FABRICATION ARE OUT TO OUT OF BARS, UNLESS SPECIFIED OTHERWISE. ALL REINFORCING BARS SHALL BE PLACED TO PROVIDE A MINIMUM COVER OF ONE INCH FROM THE SURFACE OF THE DRAIN HOLES TO THE FACE OF THE BARS.

GUARD RAIL:
CONFORM TO PROJECT PLANS AND GUARD RAIL STANDARD PLANS.

PAYMENT:
ALL WORK WILL BE PAID FOR UNDER THE DESIGNATED BRIDGE SUPERSTRUCTURE AND SUBSTRUCTURE PAY ITEM AND IN ACCORDANCE WITH THE SPECIFICATIONS.

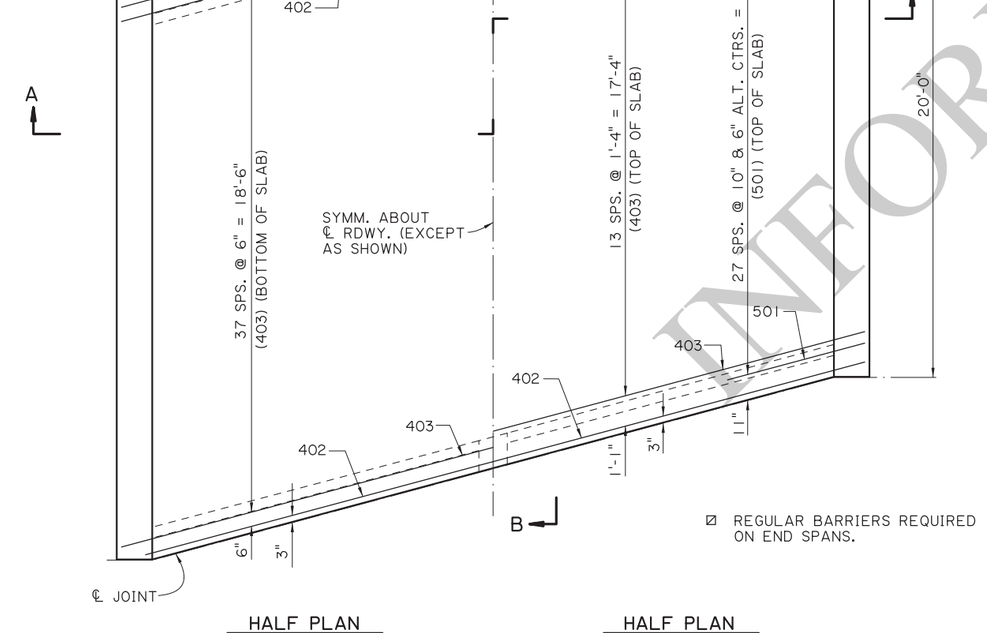

HALF PLAN
SHOWING SPACING OF BOTTOM TRANS. REINF. STEEL
SCALE : ⅜" = 1'-0"

HALF PLAN
SHOWING SPACING OF TOP TRANS. REINF. STEEL
SCALE : ⅜" = 1'-0"

⊠ REGULAR BARRIERS REQUIRED ON END SPANS.

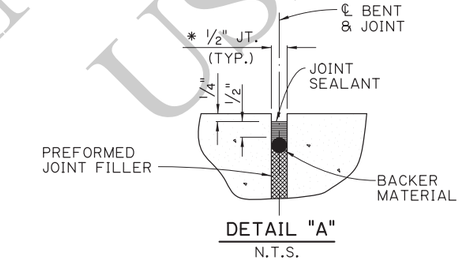

DETAIL "A"
N.T.S.

AS-DESIGNED RATING		
VEHICLE	RATING FACTOR	NOTES
HL-93 (INV)	1.451	——
HL-93 (OPR)	1.881	——
LADV-11 (INV)	1.116	MAGNIFICATION FACTOR = 1.3

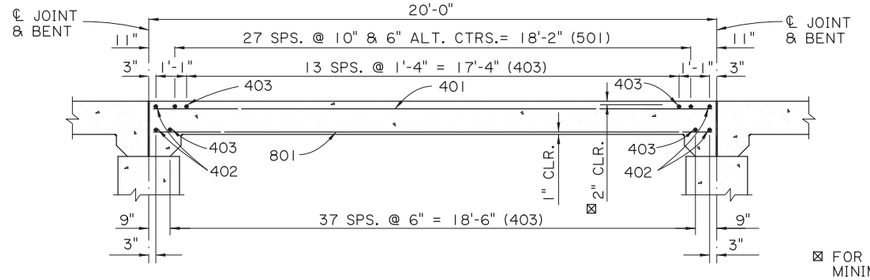

SECTION B-B
SCALE : ⅜" = 1'-0"

⊠ FOR BRIDGES IN DISTRICT 04 & 05, MINIMUM CONCRETE COVER IN TOP OF SLAB SHALL BE 2½".

FOR INFORMATIONAL USE

SHEET NUMBER

PARISH | CONTROL SECTION | STATE PROJECT

DESIGN J. PAINE | CHECK J. NAKHLEH | DETAIL D. HYMEL | CHECK J. NAKHLEH | REVIEW | SERIES # 2 OF 11

APPROVED BY CHIEF ENGINEER: DATE: 12/10/2025

REVISION OR CHANGE ORDER DESCRIPTION | BY | DATE | NO.

STATE OF LOUISIANA

SPAN (1 OF 2)
20'-0" CONCRETE SLAB SPAN
24'-0" CLEAR ROADWAY
75° CROSSING TWO WAY TANGENT

PSS-75-24-20SL

DOTD
LOUISIANA DEPARTMENT OF TRANSPORTATION & DEVELOPMENT

STANDARD PLAN

11/24/2025 16:4

IP_PWP:d1246417\SS7524span1(LRFD).dgn

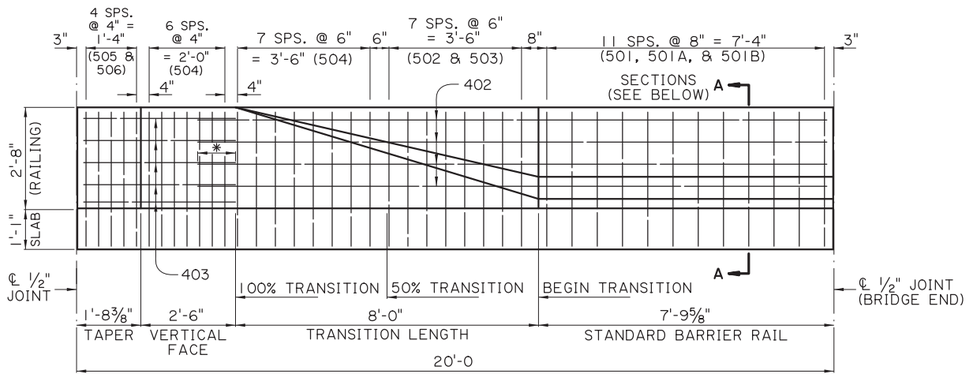

* 1'-0" (MIN.) SPLICE

BARRIER RAILING TRANSITION ELEVATION
(SHOWING BARRIER RAILING AT END OF BRIDGE)
SCALE: ½" = 1'-0"

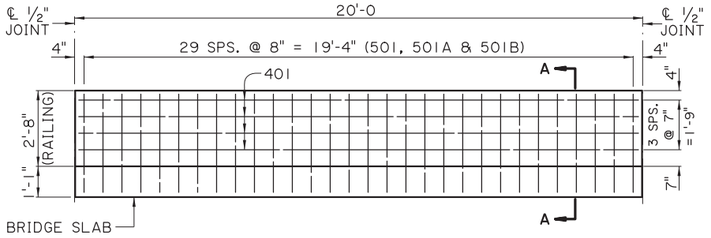

STANDARD BARRIER RAILING ELEVATION
(SHOWING BARRIER RAILING ALONG BRIDGE SLAB)
SCALE: ⅜" = 1'-0"

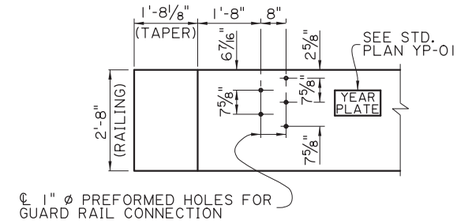

GUARD RAIL CONNECTION DETAIL
CONFORM TO GUARD RAIL STANDARD PLANS
SCALE: ½" = 1'-0"

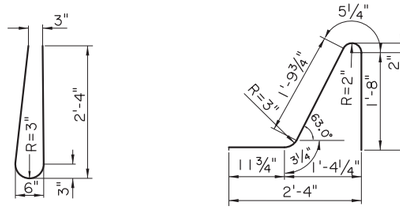

BARS 501
(4'-10" LONG)

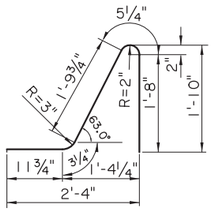

BARS 501A
(5'-2" LONG)

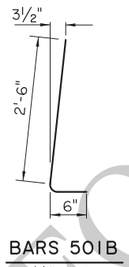

BARS 501B
(2½" ø PIN)
(3'-0" LONG)

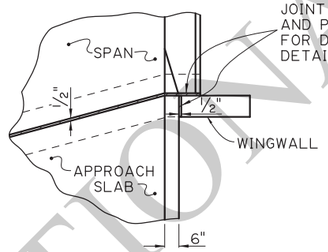

JOINT DETAIL
SCALE : ⅜" = 1'-0"

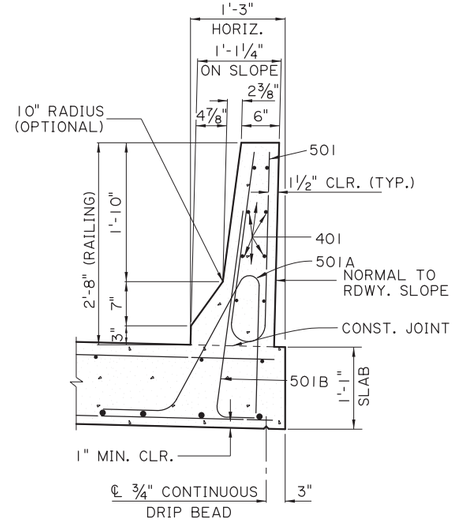

SECTION A-A
SCALE: 1" = 1'-0"

△ ON SLOPE

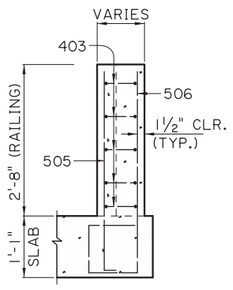

TAPER

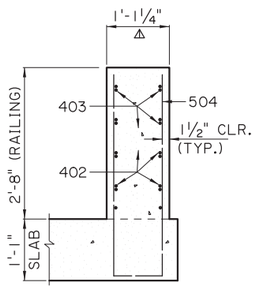

100 % TRANSITION

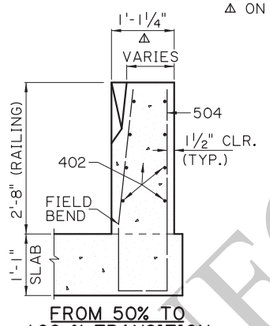

FROM 50% TO 100 % TRANSITION

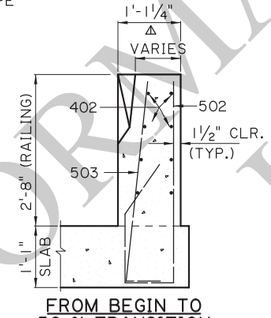

FROM BEGIN TO 50 % TRANSITION

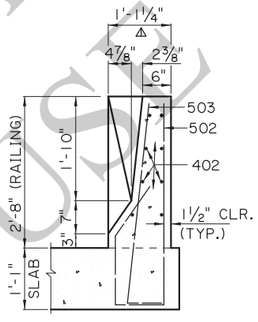

BEGIN TRANSITION

BARRIER RAILING TRANSITION SECTIONS
SCALE: ¾" = 1'-0"

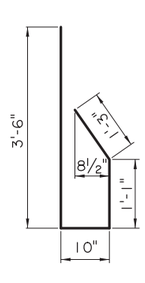

502
(2½" ø PIN)

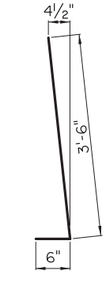

503
(2½" ø PIN)

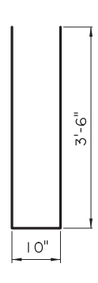

504
(2½" ø PIN)

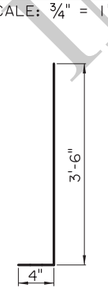

505
(2½" ø PIN)

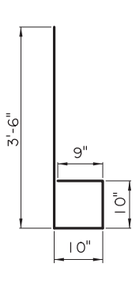

506
(2½" ø PIN)

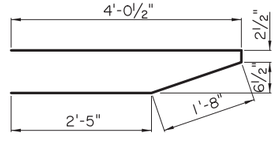

403
(2" ø PIN)

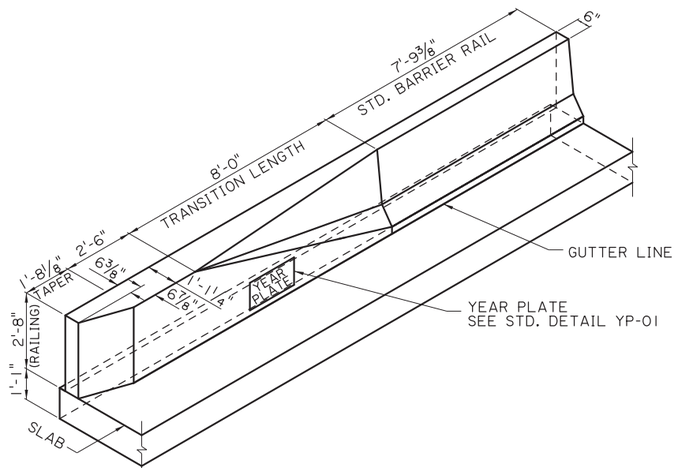

BARRIER RAILING TRANSITION SCHEMATIC
SCALE: ⅜" = 1'-0"

FOR INFORMATIONAL USE

SHEET NUMBER		
PARISH	CONTROL SECTION	STATE PROJECT
DESIGN B. DELATTE / CHECK J. NAKHLEH	DETAIL D. HYMEL / CHECK J. NAKHLEH	REVIEW / SERIES # 3 OF 11

APPROVED BY CHIEF ENGINEER: DATE: 12/10/2025

NO.	DATE	REVISION OR CHANGE ORDER DESCRIPTION	BY

SPAN (2 OF 2)
20'-0" CONCRETE BARRIER
24'-0" CLEAR ROADWAY
75° CROSSING TWO WAY TANGENT

PSS-75-24-20SL

DOTD LOUISIANA DEPARTMENT OF TRANSPORTATION & DEVELOPMENT

STANDARD PLAN

11/18/2025 12:0

IP_PWP:d1246417\SS7524span2(LRFD).dgn

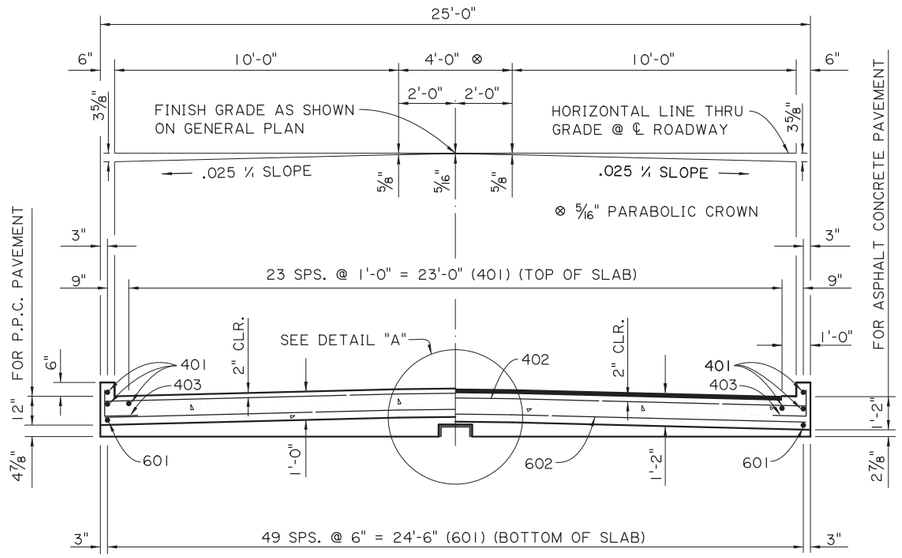

SECTION A-A

SCALE: ⅜" = 1'-0"

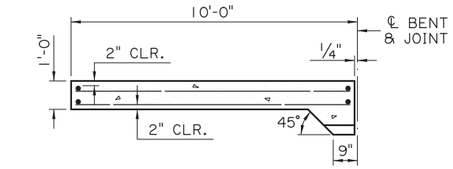

(FOR PORTLAND CEMENT CONCRETE ROADWAY PAVEMENT)

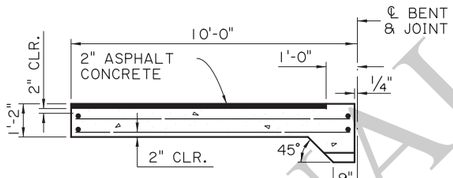

(FOR ASPHALT CONCRETE ROADWAY PAVEMENT)

SECTION ALONG ℄ ROADWAY

SCALE: ⅜" = 1'-0"

ESTIMATED QUANTITIES (ONE SLAB)				
BAR	NO.	UNIT LENGTH	TOTAL LENGTH	LOCATION
601	50	9'-7"	479'-2"	LONGIT. BOT. OF SLAB
602	20	25'-6"	510'-0"	TRANSV. BOT. OF SLAB
TOTAL NO. 6 BARS = 989'-2" = 1,486 LBS.				
401	28	9'-7"	268'-4"	LONGIT. TOP OF SLAB & CURB
402	11	25'-6"	280'-6"	TRANSV. TOP OF SLAB
403	14	2'-0"	28'-0"	DOWELS IN CURB
TOTAL NO. 4 BARS = 576'-10" = 385 LBS.				
⊙ TOTAL DEFORMED REINFORCING STEEL = 1,871 LBS.				
CONCRETE APPROACH SLAB = 27.78 SQ. YDS.				
⊙☑ ASPHALTIC CONCRETE = 2.5 TONS				
⊙☑ SAW CUT AND SEAL = 24 LIN. FT.				

⊙ TO BE PAID FOR UNDER ITEM 'CONCRETE APPROACH SLABS'.

☑ REQUIRED WHEN APPROACH SLAB IS ADJACENT TO ASPHALT CONCRETE PAVEMENT.

APPROACH SLAB NOTES:

DESIGN SPECIFICATIONS: AASHTO LRFD BRIDGE DESIGN SPECIFICATIONS, 4th EDITION, WITH 2008 & 2009 INTERIMS.

STRUCTURAL CONCRETE: ALL CONCRETE SHALL BE CLASS A1. EXPOSED EDGES SHALL HAVE A ¾" CHAMFER, UNLESS SPECIFIED OTHERWISE.

REINFORCING STEEL: ALL REINFORCING STEEL SHALL BE GRADE 60. DIMENSIONS RELATING TO THE FABRICATION ARE OUT-TO-OUT OF BARS, UNLESS SPECIFIED OTHERWISE. DIMENSIONS RELATING TO SPACING ARE TO BAR CENTERS, UNLESS SPECIFIED OTHERWISE.

BEDDING MATERIAL: FOR DETAILS OF BEDDING MATERIAL AND UNDERDRAINS, SEE APPROACH SLAB STANDARD DETAILS.

SAWING & SEALING: THE ASPHALT CONCRETE SHALL BE SAW CUT AT THE END OF THE CONCRETE APPROACH SLAB THE ENTIRE ROADWAY WIDTH AND SEALED, WHICH WILL BE BE PAID FOR UNDER THE DESIGNATED ROADWAY PAY ITEM.

PAYMENT: ALL OTHER WORK WILL BE PAID FOR UNDER THE DESIGNATED BRIDGE CONCRETE APPROACH SLAB PAY ITEM AND IN ACCORDANCE WITH THE SPECIFICATIONS.

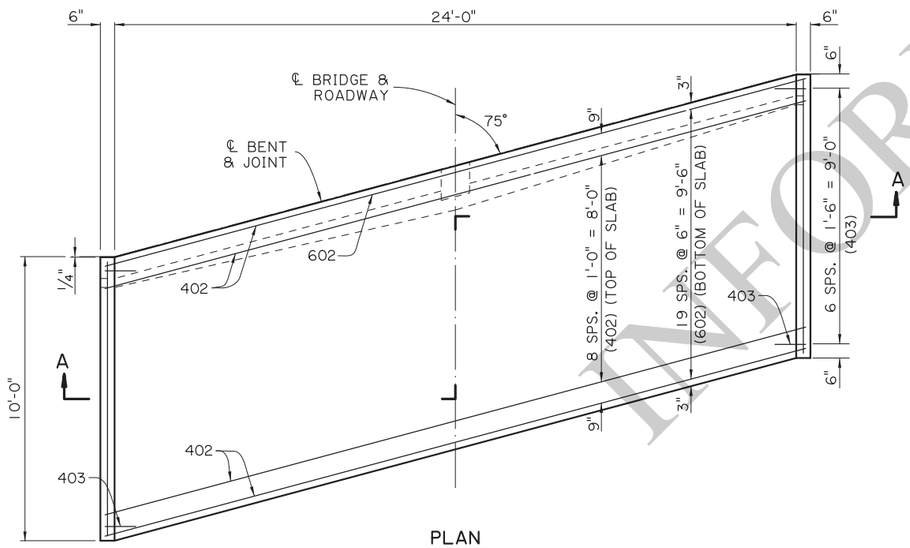

PLAN

SCALE: ⅜" = 1'-0"

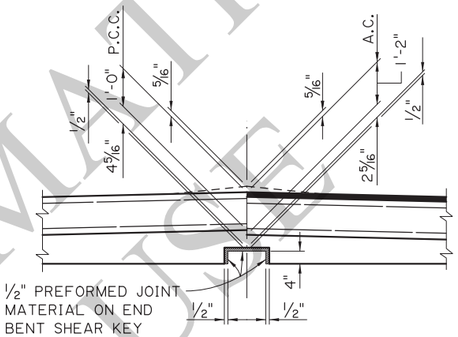

DETAIL A

SCALE : ½" = 1'-0"

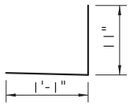

403

2" ø PIN

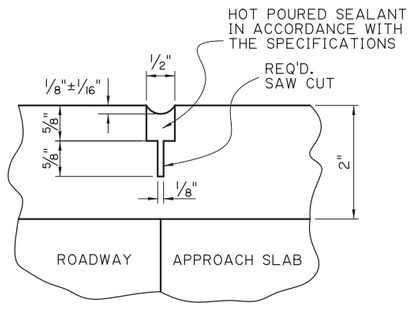

SAWING & SEALING JOINT DETAIL

N.T.S.

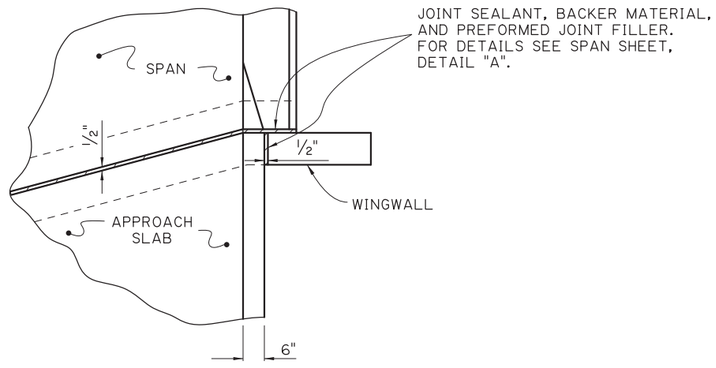

JOINT DETAIL

SCALE : ⅜" = 1'-0"

FOR INFORMATIONAL USE

SHEET NUMBER

PARISH | CONTROL SECTION | STATE PROJECT

DESIGN B. DELATTE | CHECK J. NAKHLEH | DETAIL D. HYMEL | CHECK J. NAKHLEH | REVIEW | SERIES # 4 OF 11

APPROVED BY CHIEF ENGINEER: DATE: 12/10/2025

NO. | DATE | REVISION OR CHANGE ORDER DESCRIPTION | BY

APPROACH SLAB
10'-0" CONCRETE APPROACH SLAB
24'-0" CLEAR ROADWAY
75° CROSSING TWO WAY TANGENT

PSS-75-24-20SL

DOTD LOUISIANA DEPARTMENT OF TRANSPORTATION & DEVELOPMENT

STANDARD PLAN

11/24/2025 16:4
IP_PWP:d1246417\SS7524aprslab(LRFD).dgn

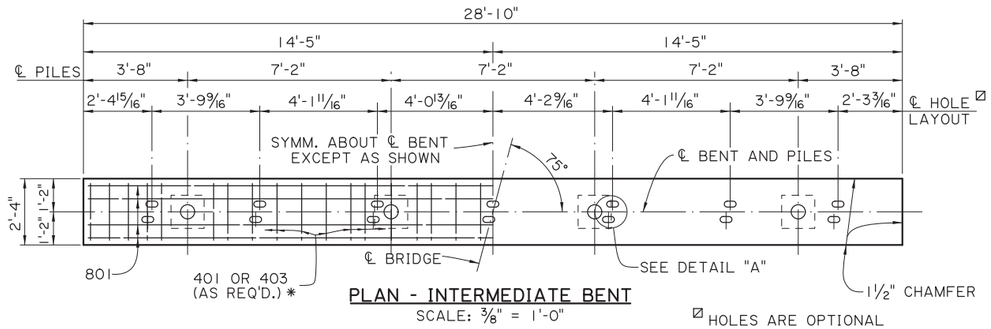

PLAN - INTERMEDIATE BENT
SCALE: 3/8" = 1'-0"

℄ HOLES ARE OPTIONAL AT EXPANSION ENDS.

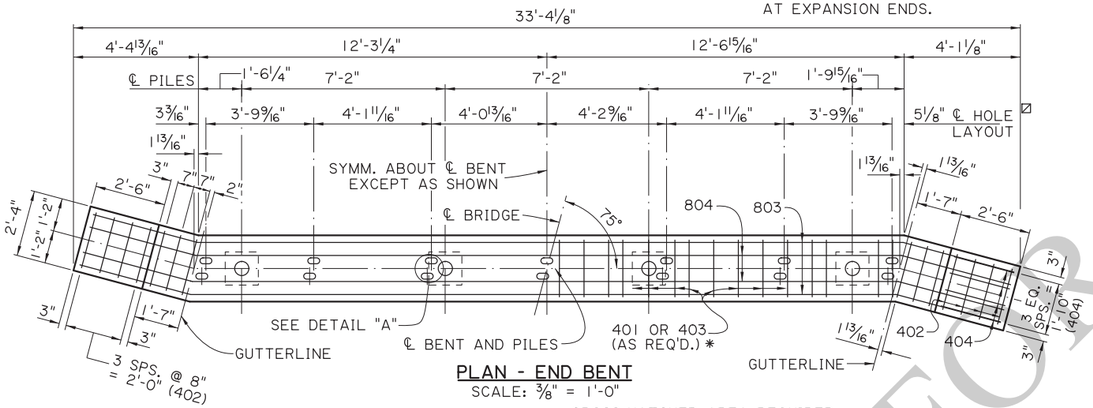

PLAN - END BENT
SCALE: 3/8" = 1'-0"

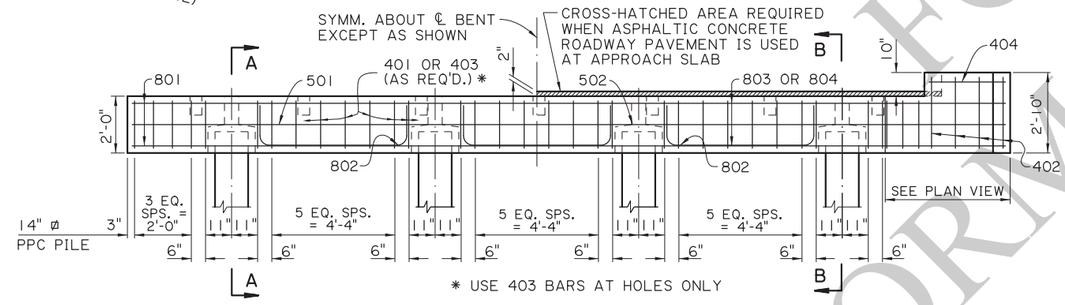

* USE 403 BARS AT HOLES ONLY

HALF ELEVATION - INTERMEDIATE BENT
SCALE: 3/8" = 1'-0"

HALF ELEVATION - END BENT
SCALE: 3/8" = 1'-0"

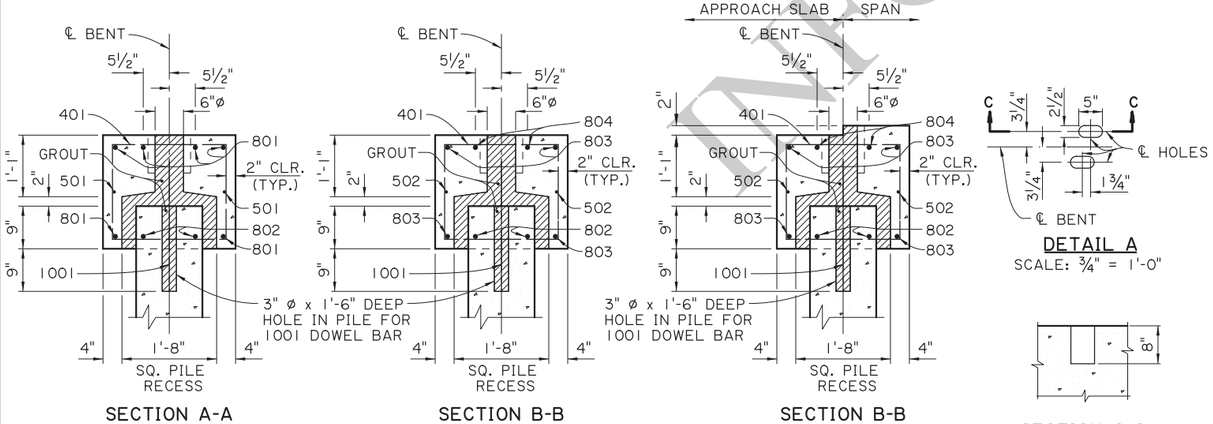

SECTION A-A
SCALE: 3/4" = 1'-0"

SECTION B-B
SCALE: 3/4" = 1'-0"
(WHEN PORTLAND CEMENT CONCRETE ROADWAY PAVEMENT IS USED AT APPROACH SLAB)

SECTION B-B
SCALE: 3/4" = 1'-0"
(WHEN ASPHALTIC CONCRETE ROADWAY PAVEMENT IS USED AT APPROACH SLAB)

DETAIL A
SCALE: 3/4" = 1'-0"

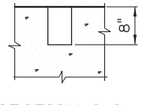

SECTION C-C
SCALE: 3/4" = 1'-0"

ESTIMATED QUANTITIES (ONE INTER. BENT)				
BAR	NO.	UNIT LENGTH	TOTAL LENGTH	LOCATION
1001	4	2'-4"	9'-4"	DOWELS IN PILES
TOTAL NO. 10 BARS = 9'-4" = 40 LBS.				
801	6	28'-6"	171'-0"	LONGIT. IN CAP
802	6	7'-10"	47'-0"	LONGIT. IN CAP BTW. PILES
TOTAL NO. 8 BARS = 218'-0" = 582 LBS.				
501	2	28'-6"	57'-0"	LONGIT. IN CAP
TOTAL NO. 5 BARS = 57'-0" = 59 LBS.				
401	30	8'-2"	245'-0"	STIRRUPS IN CAP
403	4	6'-6"	26'-0"	STIRRUPS IN CAP
TOTAL NO. 4 BARS = 271'-0" = 181 LBS.				
TOTAL DEFORMED REINFORCING STEEL = 862 LBS.				
TOTAL CLASS P1 CONCRETE = 4.64 CU. YDS.				
MAX. PILE LOAD: SERVICE DEAD LOAD = 17 TONS SERVICE LIVE LOAD = 34 TONS FACTORED TOTAL LOAD = 72 TONS				
TOTAL GROUT FOR PILE RECESSES = 0.28 CU. YDS.				

ESTIMATED QUANTITIES (ONE END BENT)				
BAR	NO.	UNIT LENGTH	TOTAL LENGTH	LOCATION
1001	4	2'-4"	9'-4"	DOWELS IN PILES
TOTAL NO. 10 BARS = 9'-4" = 40 LBS.				
802	6	7'-10"	47'-0"	LONGIT. IN CAP BTW. PILES
803	4	32'-8"	130'-8"	LONGIT. IN CAP
804	2	32'-8"	65'-4"	LONGIT. IN CAP
TOTAL NO. 8 BARS = 243'-0" = 649 LBS.				
502	2	32'-8"	65'-4"	LONGIT. IN CAP
TOTAL NO. 5 BARS = 65'-4" = 68 LBS.				
401	30	8'-2"	245'-0"	STIRRUPS IN CAP
402	8	9'-10"	78'-8"	STIRRUPS IN WINGWALL
403	4	6'-6"	26'-0"	STIRRUPS IN CAP
404	8	2'-2"	17'-4"	LONGIT. IN WINGWALL
TOTAL NO. 4 BARS = 367'-0" = 245 LBS.				
TOTAL DEFORMED REINFORCING STEEL = 1002 LBS.				
⊗ TOTAL CLASS P1 CONCRETE = 5.72 CU. YDS.				
MAX. PILE LOAD: SERVICE DEAD LOAD = 17 TONS SERVICE LIVE LOAD = 34 TONS FACTORED TOTAL LOAD = 72 TONS				
TOTAL GROUT FOR PILE RECESSES = 0.28 CU. YDS.				

⊗ ADD 0.20 CU. YDS. OF CLASS P1 CONCRETE PER BENT WHEN ASPHALTIC CONCRETE ROADWAY PAVEMENT IS USED AT APPROACH SLAB.

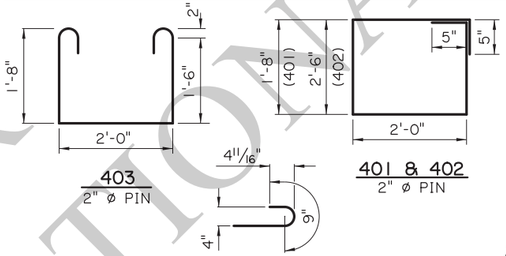

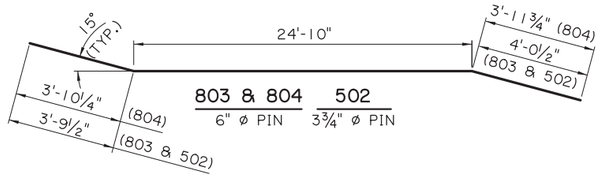

AS-DESIGNED RATING		
VEHICLE	RATING FACTOR	NOTES
HL-93 (INV)	1.468	——
HL-93 (OPR)	1.903	——
LADV-11 (INV)	1.129	MAGNIFICATION FACTOR = 1.3

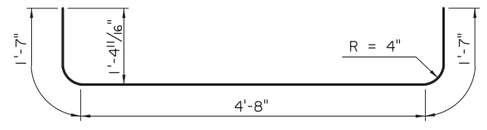

802
6" ø PIN

ALTERNATE BENT NOTES:

DESIGN SPECIFICATIONS: AASHTO LRFD BRIDGE DESIGN SPECIFICATIONS, 4th EDITION, WITH 2008 & 2009 INTERIMS.
DESIGN LOAD: LIVE LOAD IS HL-93, AND LADV-11 (LOUISIANA DESIGN VEHICLE LIVE LOAD 2011).
STRUCTURAL CONCRETE: ALL CONCRETE SHALL BE CLASS P1. STEEL SIDE FORMS AND STEEL OR CONCRETE BOTTOM FORMS SHALL BE USED FOR PRECAST COMPONENTS. EXPOSED EDGES SHALL HAVE A 3/4" CHAMFER UNLESS SPECIFIED OTHERWISE. ALL SURFACES SHALL RECEIVE A CLASS 1 ORDINARY SURFACE FINISH UPON REMOVAL OF THE FORMS. ALL EXPOSED FACES OF WINGWALLS AND ENDS OF CAPS SHALL RECEIVE A CLASS 3 SPECIAL FINISH.
REINFORCING STEEL: ALL REINFORCING SHALL BE GRADE 60. DIMENSIONS RELATING TO FABRICATION ARE OUT TO OUT OF BARS, UNLESS SPECIFIED OTHERWISE. DIMENSIONS RELATING TO SPACING ARE TO BAR CENTERS, UNLESS SPECIFIED OTHERWISE.
GROUT: THE GROUT SHALL BE AN APPROVED FLOWABLE NON-SHRINK GROUT LISTED ON AML. THE GROUT SHALL BE TESTED FOR ACCEPTANCE PRIOR TO USAGE. SURFACES SHALL BE THOROUGHLY SATURATED WITH WATER BY FLOODING THE VOID FOR APPROXIMATELY 5 MINUTES IMMEDIATELY BEFORE THE GROUT IS PLACED. ONLY POTABLE WATER SHALL BE USED FOR SATURATION AND MIXING PURPOSES.
PRECAST UNITS: THE PLANS FOR AN ONGOING OPERATION OF FABRICATING FACILITIES SHALL BE APPROVED BY THE DEPARTMENT. EACH UNIT SHALL HAVE THE FABRICATOR'S MARK AND UNIQUE NUMBER, MEETING THE APPROVAL OF THE ENGINEER, STAMPED OR SCRIBED IN THE PLASTIC CONCRETE. ALL UNITS SHALL BE HELD AT THE PLANT FOR A MINIMUM OF 10 DAYS AFTER CASTING. THE CONCRETE SHALL REACH A MINIMUM STRENGTH OF 3,000 PSI BEFORE HANDLING IS PERMITTED. THE LIFTING INSERTS SHALL BE 1" TYPE S INSERTS AS MANUFACTURED BY DAYTON-SUPERIOR CORPORATION OR AN APPROVED EQUAL. EACH INSERT SHALL HAVE A MINIMUM LOAD CAPACITY OF 10,000 POUNDS. FOUR INSERTS WITH 1" ø x 5" LONG COIL BOLTS SHALL BE PLACED IN THE TOP OF THE UNITS AND LOCATED AT A DISTANCE 21% OF ITS LENGTH (+/- 6") FROM EACH END AND 6" FROM THE EDGES. INSERT HOLES SHALL BE GROUT FILLED AFTER PLACEMENT OF THE UNIT. AT THE CONTRACTOR'S OPTION, A SLING OF SUFFICIENT CAPACITY MAY BE USED FOR LIFTING, PROVIDED THE SAME PICKUP LOCATIONS FROM THE ENDS ARE USED.
PRECAST CONCRETE PILES: CONFORM TO PILE STANDARD PLAN AND PROJECT PLANS FOR FABRICATION AND INSTALLION. IF TOP CENTER OF DRIVEN PILE IS OUTSIDE OF SPECIFIED HORIZONTAL TOLERANCES BUT WITHIN SPECIFIED VERTICAL TOLERANCES, PROVIDE CAST-IN-PLACE BENT CAP IN ACCORANCE WITH THIS STANDARD PLAN. PILES WILL BE PAID FOR UNDER THE DESIGNATED PILE PAY ITEMS.
PAYMENT: ALL OTHER WORK WILL BE PAID FOR UNDER THE DESIGNATED BRIDGE SUPERSTRUCTURE AND SUBSTRUCTURE PAY ITEM AND IN ACCORDANCE WITH THE SPECIFICATIONS.

INFORMATIONAL PURPOSES ONLY

SHEET NUMBER

PARISH	CONTROL SECTION	STATE PROJECT

DESIGN	CHECK	DETAIL	CHECK	REVIEW	SERIES # 5 OF 11
B. DELATTE	J. NAKHLEH	D. HYMEL	J. NAKHLEH		

APPROVED BY CHIEF ENGINEER: DATE: 12/10/2025

NO.	DATE	REVISION OR CHANGE ORDER DESCRIPTION	BY

STATE OF LOUISIANA — DEPARTMENT OF TRANSPORTATION AND DEVELOPMENT

ALTERNATE BENTS
PRECAST CONCRETE BENTS
24'-0" CLEAR ROADWAY
75° CROSSING TWO WAY TANGENT

PSS-75-24-20SL

DOTD
LOUISIANA DEPARTMENT OF TRANSPORTATION & DEVELOPMENT

STANDARD PLAN

11/24/2025 16:5:

IP_PWP:d1246417\SS7524altbent1(LRFD).dgn

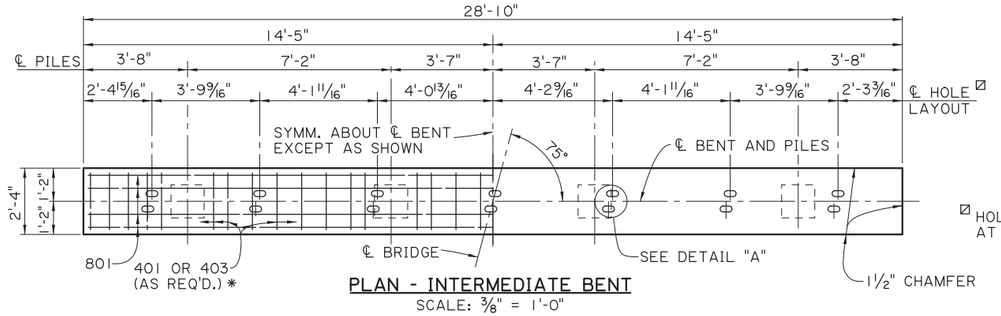

⊠ HOLES ARE OPTIONAL AT EXPANSION ENDS.

PLAN - INTERMEDIATE BENT
SCALE: 3/8" = 1'-0"

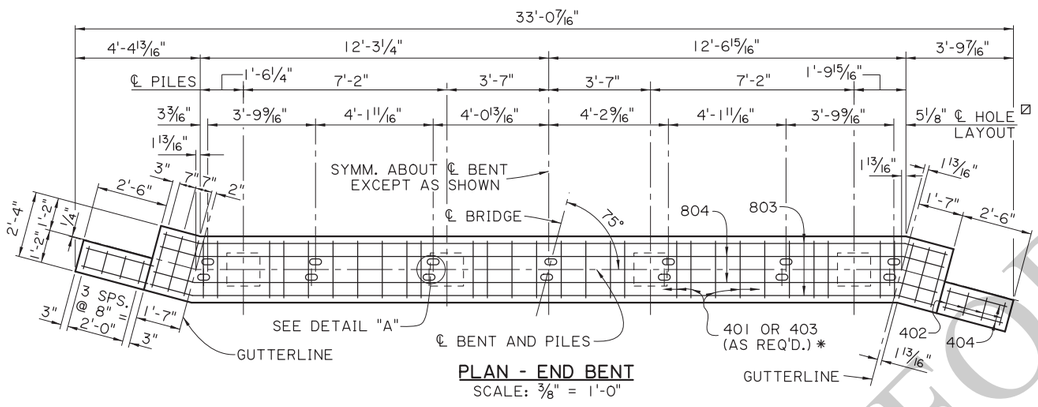

PLAN - END BENT
SCALE: 3/8" = 1'-0"

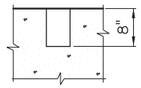

SECTION C-C
SCALE: 3/4" = 1'-0"

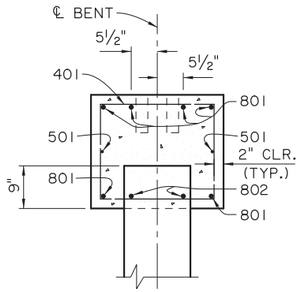

SECTION A-A
SCALE: 3/4" = 1'-0"

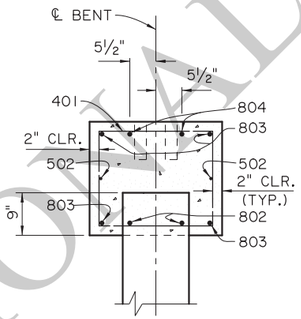

SECTION B-B
SCALE: 3/4" = 1'-0"
(WHEN PORTLAND CEMENT CONCRETE ROADWAY PAVEMENT IS USED AT APPROACH SLAB)

ESTIMATED QUANTITIES (ONE INTER. BENT)				
BAR	NO.	UNIT LENGTH	TOTAL LENGTH	LOCATION
801	6	28'-6"	171'-0"	LONGIT. IN CAP
802	6	7'-10"	47'-0"	LONGIT. IN CAP BTW. PILES
TOTAL NO. 8 BARS = 218'-0" = 582 LBS.				
501	2	28'-6"	57'-0"	LONGIT. IN CAP
TOTAL NO. 5 BARS = 57'-0" = 59 LBS.				
401	30	8'-2"	245'-0"	STIRRUPS IN CAP
403	4	6'-6"	26'-0"	STIRRUPS IN CAP
TOTAL NO. 4 BARS = 271'-0" = 181 LBS.				
TOTAL DEFORMED REINFORCING STEEL = 822 LBS.				
⊠ TOTAL CLASS A1 CONCRETE = 4.79 CU. YDS.				
MAX. PILE LOAD: SERVICE DEAD LOAD = 17 TONS SERVICE LIVE LOAD = 34 TONS FACTORED TOTAL LOAD = 72 TONS				

⊠ 16" ø PPC PILES USED FOR ESTIMATING PURPOSES ONLY. (ADD 0.04 CU. YDS. OF CLASS A1 CONCRETE PER BENT WHEN 14" ø PPC PILES ARE USED.)

ESTIMATED QUANTITIES (ONE END BENT)				
BAR	NO.	UNIT LENGTH	TOTAL LENGTH	LOCATION
802	6	7'-10"	47'-0"	LONGIT. IN CAP BTW. PILES
803	4	27'-8"	110'-8"	LONGIT. IN CAP
804	2	27'-8"	55'-4"	LONGIT. IN CAP
TOTAL NO. 8 BARS = 213'-0" = 569 LBS.				
502	2	27'-8"	55'-4"	LONGIT. IN CAP
TOTAL NO. 5 BARS = 55'-4" = 58 LBS.				
401	30	8'-2"	245'-0"	STIRRUPS IN CAP
402	8	7'-6"	60'-0"	STIRRUPS IN WINGWALL
403	4	6'-6"	26'-0"	STIRRUPS IN CAP
404	4	2'-2"	8'-8"	LONGIT. IN WINGWALL
405	12	3'-11"	47'-0"	LONGIT. IN WINGWALL
TOTAL NO. 4 BARS = 386'-8" = 258 LBS.				
TOTAL DEFORMED REINFORCING STEEL = 885 LBS.				
⊗ TOTAL CLASS A1 CONCRETE = 5.24 CU. YDS.				
MAX. PILE LOAD: SERVICE DEAD LOAD = 17 TONS SERVICE LIVE LOAD = 34 TONS FACTORED TOTAL LOAD = 72 TONS				

⊗ 16" ø PPC PILES USED FOR ESTIMATING PURPOSES ONLY. (ADD 0.04 CU. YDS. OF CLASS A1 CONCRETE PER BENT WHEN 14" ø PPC PILES ARE USED.) ADD 0.20 CU. YDS. OF CLASS A1 CONCRETE PER BENT WHEN ASPHALTIC CONCRETE ROADWAY PAVEMENT IS USED AT APPROACH SLAB.

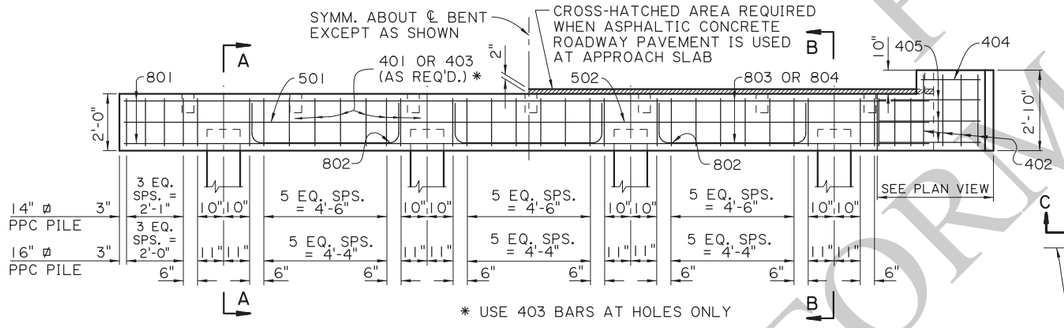

* USE 403 BARS AT HOLES ONLY

HALF ELEVATION - INTERMEDIATE BENT
SCALE: 3/8" = 1'-0"

HALF ELEVATION - END BENT
SCALE: 3/8" = 1'-0"

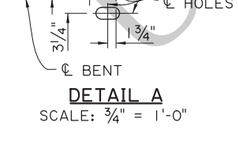

DETAIL A
SCALE: 3/4" = 1'-0"

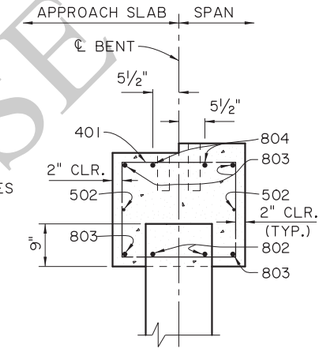

SECTION B-B
SCALE: 3/4" = 1'-0"
(WHEN ASPHALTIC CONCRETE ROADWAY PAVEMENT IS USED AT APPROACH SLAB)

AS-DESIGNED RATING		
VEHICLE	RATING FACTOR	NOTES
HL-93 (INV)	1.438	——
HL-93 (OPR)	1.864	——
LADV-11 (INV)	1.106	MAGNIFICATION FACTOR = 1.3

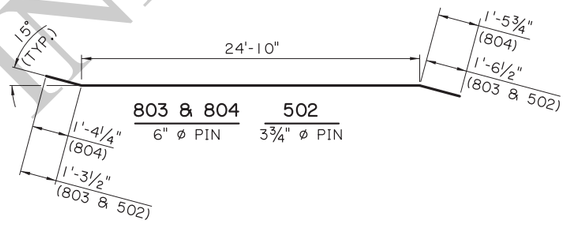

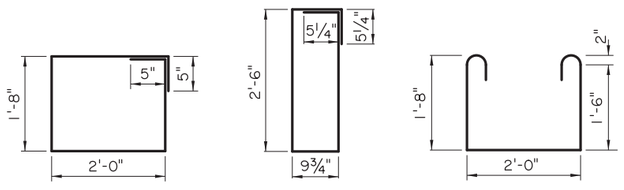

401
2" ø PIN

402
2" ø PIN

403
2" ø PIN

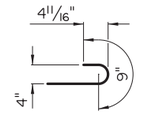

180° HOOK FOR 403 BARS
3" ø PIN

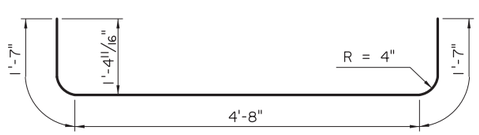

802
6" ø PIN

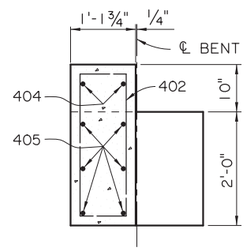

END ELEVATION
SCALE: 3/4" = 1'-0"

ALTERNATE BENT NOTES:

DESIGN SPECIFICATIONS: AASHTO LRFD BRIDGE DESIGN SPECIFICATIONS, 4th EDITION, WITH 2008 & 2009 INTERIMS.

DESIGN LOAD: LIVE LOAD IS HL-93, AND LADV-11 (LOUISIANA DESIGN VEHICLE LIVE LOAD 2011).

STRUCTURAL CONCRETE: ALL CONCRETE SHALL BE CLASS A1. EXPOSED EDGES SHALL HAVE A ¾" CHAMFER UNLESS OTHERWISE NOTED. ALL EXPOSED FACES OF WINGWALLS AND ENDS OF CAPS SHALL RECEIVE A SURFACE FINISH AS PER THE SPECIFICATIONS, UNLESS SPECIFIED OTHERWISE.

REINFORCING STEEL: ALL REINFORCING SHALL BE GRADE 60. DIMENSIONS RELATING TO FABRICATION ARE OUT TO OUT OF BARS, UNLESS SPECIFIED OTHERWISE. DIMENSIONS RELATING TO SPACING ARE TO BAR CENTERS, UNLESS SPECIFIED OTHERWISE.

PRECAST CONCRETE PILES: CONFORM TO PILE STANDARD PLAN AND PROJECT PLANS FOR FABRICATION AND INSTALLATION. PILES WILL BE PAID FOR UNDER THE DESIGNATED PILE PAY ITEMS.

PAYMENT: ALL OTHER WORK WILL BE PAID FOR UNDER THE DESIGNATED BRIDGE SUPERSTRUCTURE AND SUBSTRUCTURE PAY ITEM AND IN ACCORDANCE WITH THE SPECIFICATIONS.

FOR INFORMATIONAL USE

SHEET NUMBER

PARISH | CONTROL SECTION | STATE PROJECT

DESIGN B. DELATTE | CHECK J. NAKHLEH | DETAIL D. HYMEL | CHECK J. NAKHLEH | REVIEW SERIES # 6 OF 11

APPROVED BY CHIEF ENGINEER: DATE: 12/10/2025

NO. | DATE | REVISION OR CHANGE ORDER DESCRIPTION | BY

ALTERNATE BENTS
CAST-IN-PLACE CONCRETE BENTS
24'-0" CLEAR ROADWAY
75° CROSSING TWO WAY TANGENT

PSS-75-24-20SL

DOTD
LOUISIANA DEPARTMENT OF TRANSPORTATION & DEVELOPMENT

STANDARD PLAN

11/24/2025 16:5

IP_PWP:d1246417\SS7524altbent2(LRFD).dgn

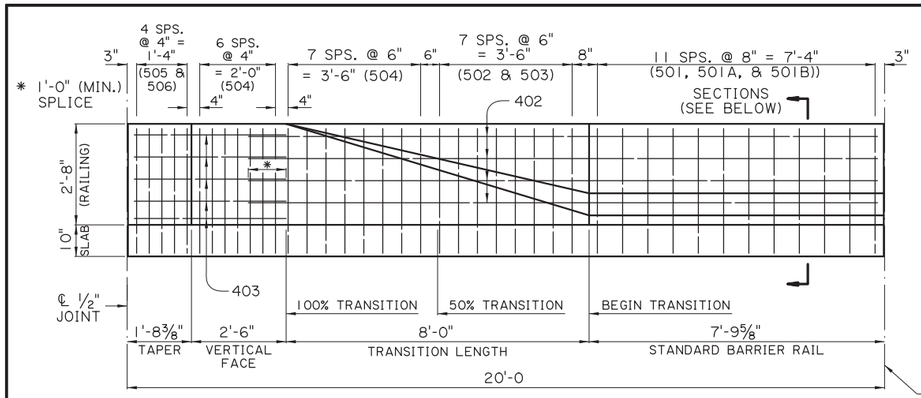

BARRIER RAILING TRANSITION ELEVATION
(SHOWING BARRIER RAILING AT END OF BRIDGE)
SCALE: ½" = 1'-0"

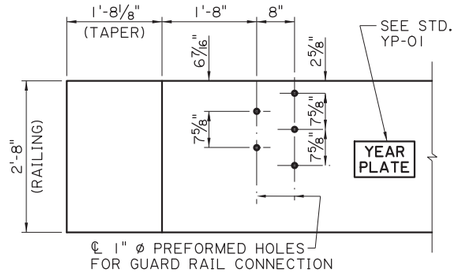

GUARD RAIL CONNECTION DETAIL
CONFORM TO GUARD RAIL STANDARD PLANS
SCALE: ¾" = 1'-0"

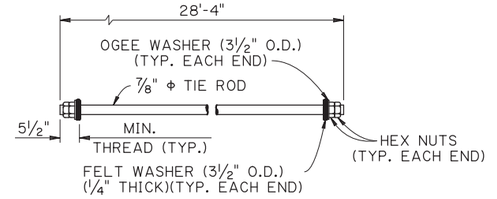

NOTE:
THE NUTS & WASHERS FOR THE TIE ROD SHALL BE ZINC COATED AND THE EXPOSED ENDS TO THE TIE RODS SHALL BE PAINTED WITH AN APPROVED COATING. AS A FINAL OPERATION THE CONTRACTOR SHALL BE REQUIRED TO TORQUE THE INSTALLED TIE ROD TO 170 FT. LBS. JUST PRIOR TO PAINTING. ALL EXPOSED ENDS SHALL BE PAINTED WITH AN APPROVED COATING AFTER STRESSING. ONE (1) MECHANICAL SPLICE MAY BE USED IN SPLICING THE ⅞" ϕ TIE ROD. THE SPLICE SHALL DEVELOP AT LEAST 125% OF THE SPECIFIED YIELD STRENGTH OF THE TIE ROD IN TENSION. THE MECHANICAL SPLICE SHALL BE ZINC COATED OR PAINTED WITH AN APPROVED COLD GALVANIZING REPAIR COMPOUND FROM AML PRIOR TO PLACING THE TIE ROD IN THE STRUCTURE.

DETAILS OF TIE ROD

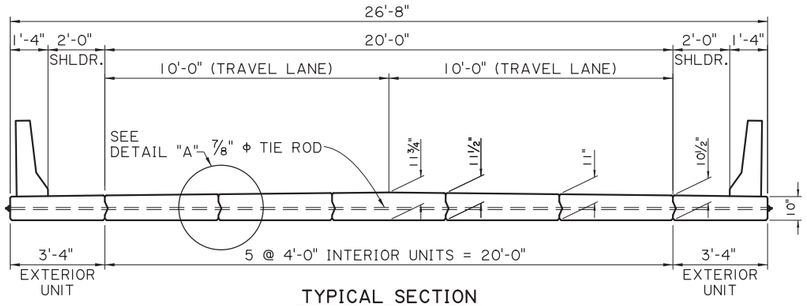

TYPICAL SECTION
SCALE: ⅜" = 1'-0"

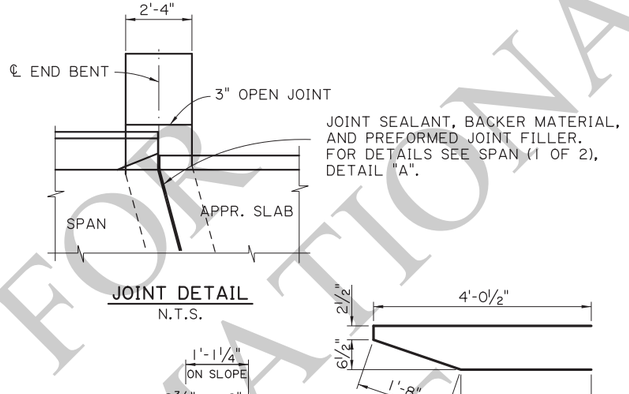

JOINT DETAIL
N.T.S.

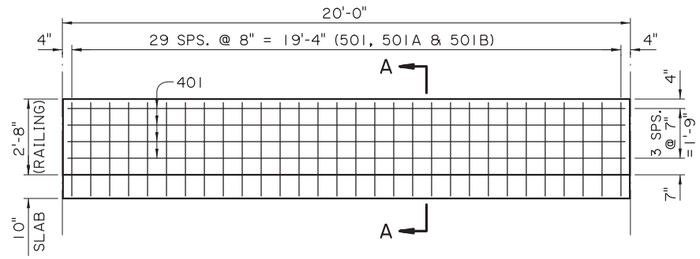

STANDARD BARRIER RAILING ELEVATION
(SHOWING BARRIER RAILING ALONG BRIDGE END)
SCALE: ⅜" = 1'-0"

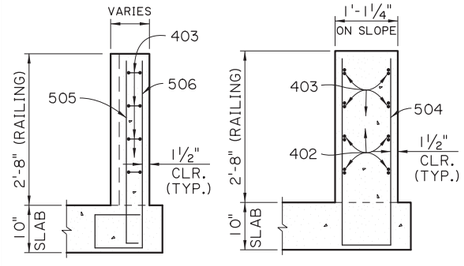

TAPER

100 % TRANSITION

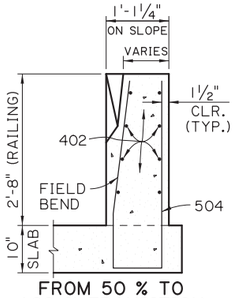

FROM 50 % TO 100 % TRANSITION

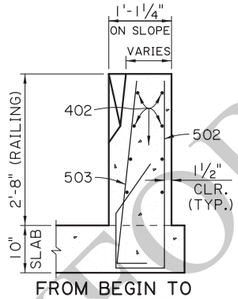

FROM BEGIN TO 50 % TRANSITION

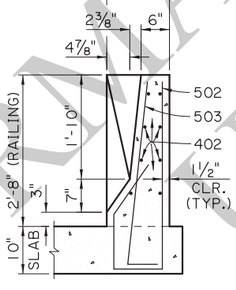

BEGIN TRANSITION

BARRIER RAILING TRANSITION SECTIONS
SCALE: ¾" = 1'-0"

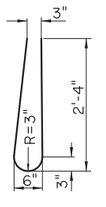

BARS 501
(4'-10" LONG)

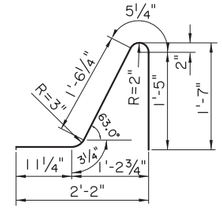

BARS 501A
(4'-7" LONG)

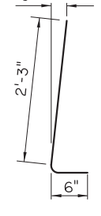

BARS 501B
(2½" ø PIN)
(2'-9" LONG)

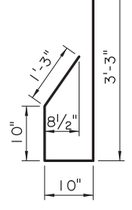

502
(2½" ø PIN)
(6'-2" LONG)

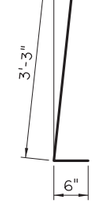

503
(2½" ø PIN)
(3'-9" LONG)

504
(2½" ø PIN)
(7'-4" LONG)

505
(2½" ø PIN)
(3'-7" LONG)

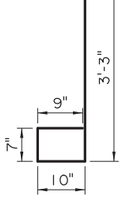

506
(2½" ø PIN)
(5'-5" LONG)

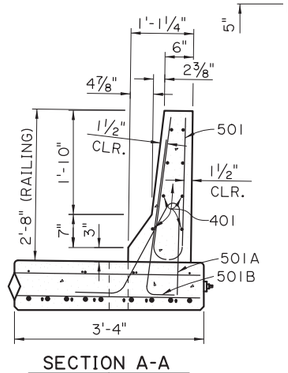

SECTION A-A
SCALE: ¾" = 1'-0"

403
(2" ø PIN)
(8'-4" LONG)

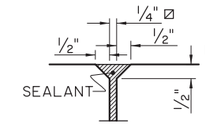

DETAIL "B"
SCALE: 1" = 1'-0"

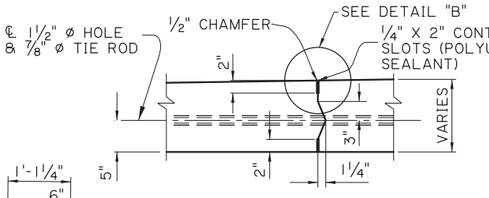

DETAIL "A"
SCALE: 1" = 1'-0"

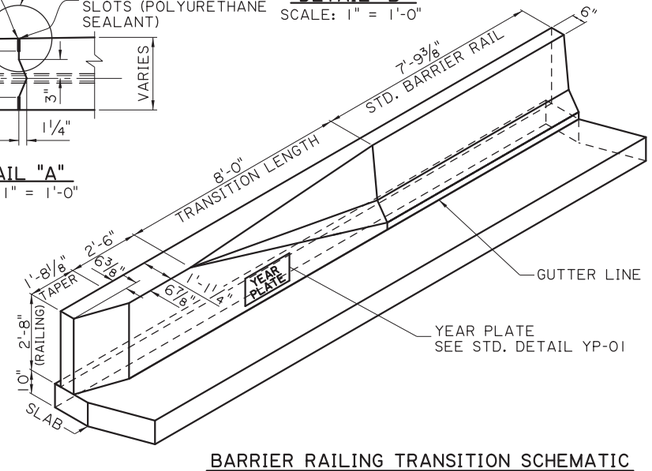

BARRIER RAILING TRANSITION SCHEMATIC
SCALE: ⅜" = 1'-0"

FOR INFORMATIONAL USE

SHEET NUMBER		
PARISH	CONTROL SECTION	STATE PROJECT
DESIGN B. DELATTE / CHECK J. NAKHLEH	DETAIL D. HYMEL / CHECK J. NAKHLEH	REVIEW / SERIES # 7 OF 11

APPROVED BY CHIEF ENGINEER: DATE: 12/10/2025

NO.	DATE	REVISION	BY

ALTERNATE SPAN (1 OF 4)
20'-0" PRECAST CONC. SLAB SPAN
24'-0" CLEAR ROADWAY
75° CROSSING TWO WAY TANGENT

PSS-75-24-20SL

STANDARD PLAN

10:5.
11/18/2025
IP_PWP:d1246417\SS7524altspan1(LRFD).dgn

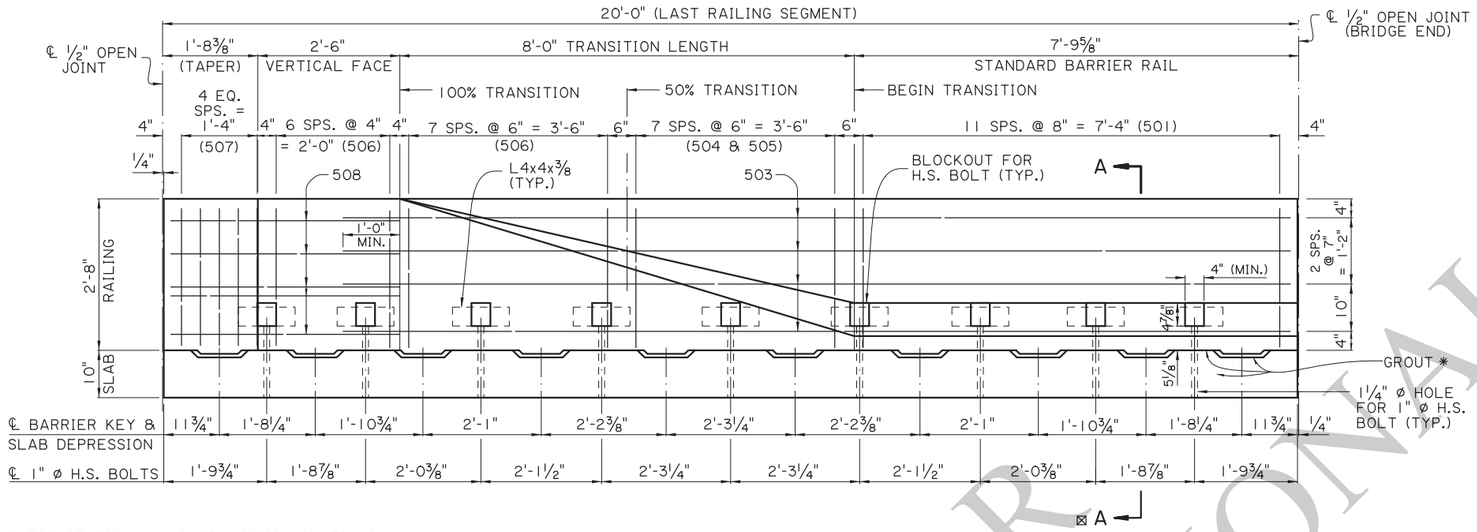

⊠ FOR SECTION A-A & TRANSITION SECTIONS SEE ALTERNATE SPAN (3 OF4)

PRECAST BARRIER RAILING TRANSITION ELEVATION

(SHOWING BARRIER RAILING AT END OF BRIDGE)
SCALE: ¾" = 1'-0"

* PLACE OR INJECT NON-SHRINK GROUT AS REQUIRED IN BETWEEN SLAB DEPRESSIONS TO FILL ALL VOIDS AND GAPS FOR FULL EVEN BEARING OF THE BARRIER ON THE SLAB. SEE NOTE 3, SHEET 9 OF 11.

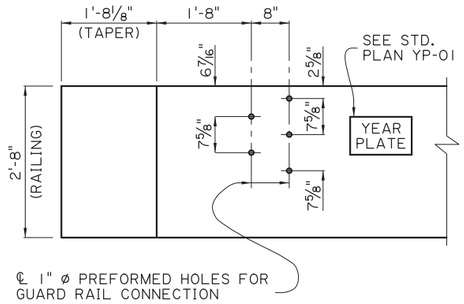

GUARD RAIL CONNECTION DETAIL

CONFORM TO GUARD RAIL STANDARD PLANS
SCALE: ¾" = 1'-0"

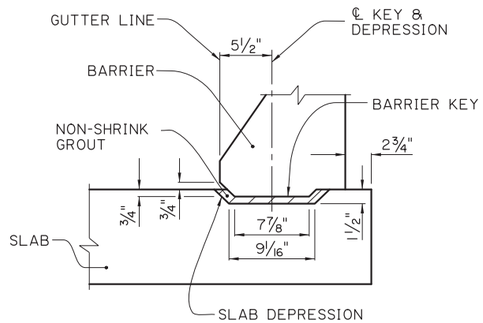

ELEVATION

SCALE: 1½" = 1'-0"

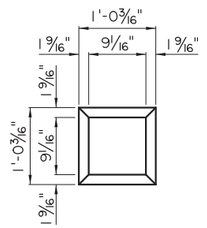

PLAN-DEPRESSION

SCALE: 1" = 1'-0"

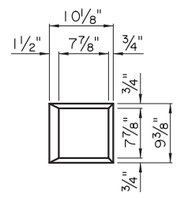

PLAN-KEY

SCALE: 1" = 1'-0"

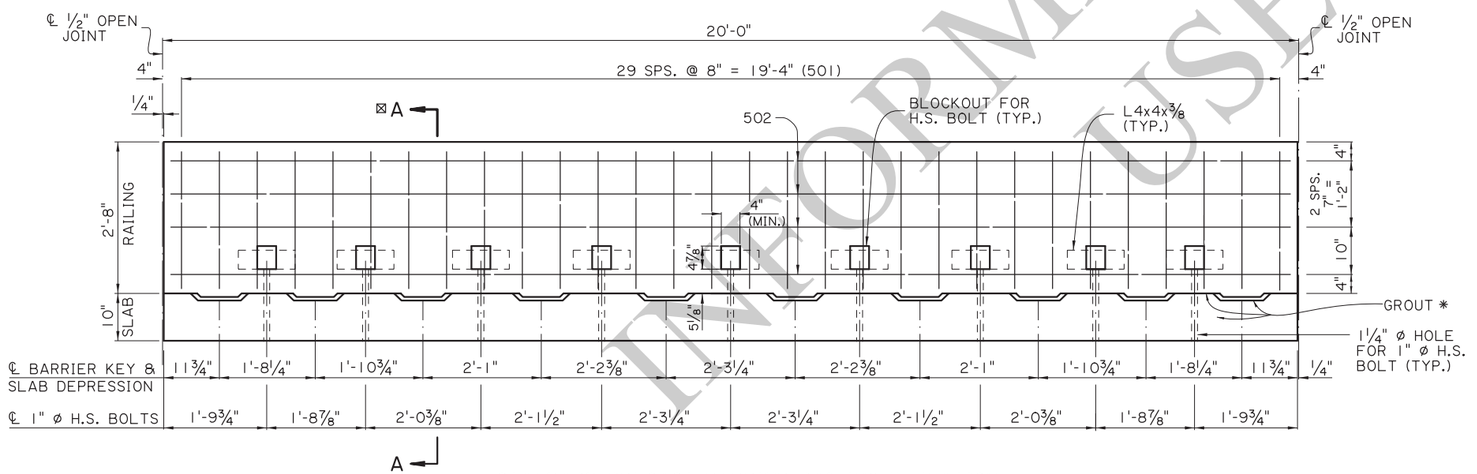

STANDARD PRECAST BARRIER RAILING ELEVATION

(SHOWING BARRIER RAILING ALONG BRIDGE SLAB)
SCALE: ¾" = 1'-0"

BARRIER KEY AND PANEL DEPRESSION DETAILS

FOR INFORMATIONAL USE

SHEET NUMBER

PARISH | CONTROL SECTION | STATE PROJECT

DESIGN B. DELATTE | CHECK J. NAKHLEH | DETAIL D. HYMEL | CHECK J. NAKHLEH | REVIEW | SERIES # 8 OF 11

APPROVED BY CHIEF ENGINEER: DATE: 12/10/2025

NO.	DATE	REVISION OR CHANGE ORDER DESCRIPTION	BY

STATE OF LOUISIANA

ALTERNATE SPAN (2 OF 4)
20'-0" PRECAST CONC. BARRIER
24'-0" CLEAR ROADWAY
75° CROSSING TWO WAY TANGENT

PSS-75-24-20SL

DOTD LOUISIANA DEPARTMENT OF TRANSPORTATION & DEVELOPMENT

STANDARD PLAN

11/18/2025 11:0

IP_PWP:d1246417\SS7524altspan2(LRFD).dgn

CHECK PRINTS
11/18/2025 11:0
IP_PWP:d1246417\SS7524altspan3(LRFD).dgn

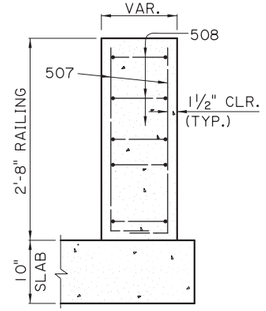

TAPER

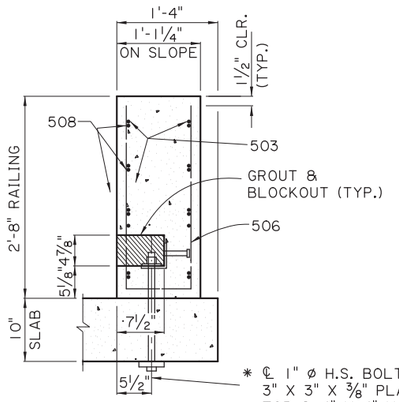

100% TRANSITION

* ℄ 1" ø H.S. BOLT, AND 3" X 3" X ⅜" PLATE WASHER TOP & 4" X 4" X ⅞" PLATE WASHER BOTTOM, AND ONE HEAVY HEX NUT (TYP.).

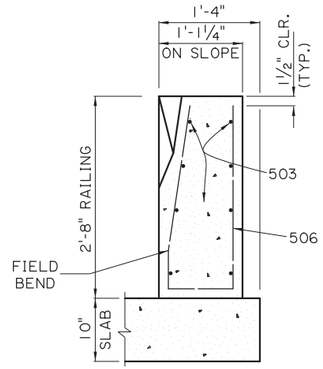

50% TRANSITION

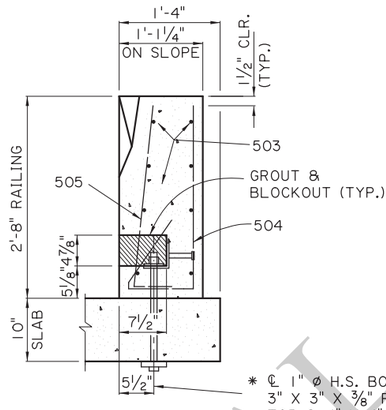

50% TRANSITION

* ℄ 1" ø H.S. BOLT, AND 3" X 3" X ⅜" PLATE WASHER TOP & 4" X 4" X ⅞" PLATE WASHER BOTTOM, AND ONE HEAVY HEX NUT (TYP.).

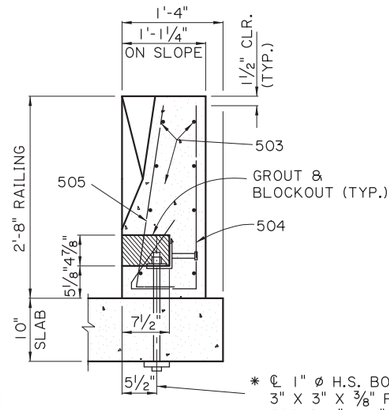

BEGIN TRANSITION

* ℄ 1" ø H.S. BOLT, AND 3" X 3" X ⅜" PLATE WASHER TOP & 4" X 4" X ⅞" PLATE WASHER BOTTOM, AND ONE HEAVY HEX NUT (TYP.).

BARRIER RAILING TRANSITION SECTIONS

SCALE: 1" = 1'-0"

* 1" ø THREADED STUD OF EQUAL STRENGTH, WITH 2 NUTS & 2 WASHERS, MAY BE USED IN LIEU OF H.S. BOLTS.

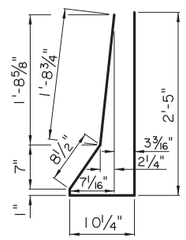

501
(2½" ø PIN)

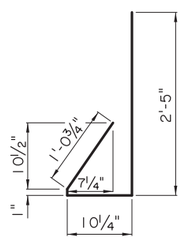

504
(2½" ø PIN)

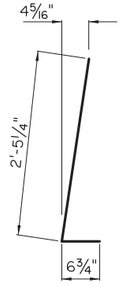

505
(2½" ø PIN)

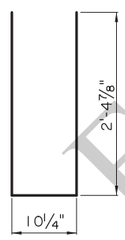

506
(2½" ø PIN)

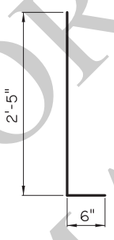

507
(2½" ø PIN)

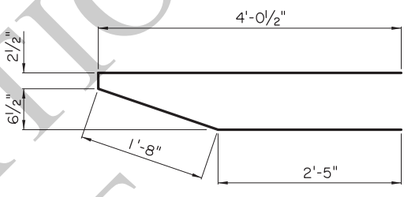

508
(2½" ø PIN)

NOTES:

1) ALL BARRIER RAIL SURFACES ARE TO RECEIVE A CLASS 3 SPECIAL FINISH.

2) ALL SURFACES OF THE BLOCKOUTS EXCEPT THE BOTTOM MAY BE TAPERED AND ALL CORNERS MAY BE ROUNDED TO A RADIUS TO ALLOW FOR EASY REMOVAL OF PLUGS OR FORMS. AFTER PLACING AND TIGHTENING THE ANCHOR BOLTS, THE BLOCKOUTS SHALL BE FILLED WITH AN APPROVED NON-SHRINK GROUT FROM AML AND TROWELED TO THE REQUIRED FINISH AND TO THE SATISFACTION OF THE ENGINEER.

3) AFTER BARRIER IS PLACED AND ALIGNED, ALL GAPS UNDER BARRIER AND TOP OF SLAB SHALL BE FILLED WITH NON-SHRINK GROUT FROM AML AND ALLOWED TO SET PRIOR TO TIGHTENING OF BOLTS. IT IS IMPORTANT TO FILL ALL VOIDS AND GAPS UNDER THE BARRIER TO ENSURE EVEN BEARING ON DECK WHEN THE ANCHOR BOLTS ARE LOADED.

4) ALL 1" ø BOLTS SHALL BE HIGH STRENGTH A325 OR APPROVED EQUAL. BOLT, NUT & WASHER TO BE GALVANIZED AS PER ASTM A-153. BOLTS SHALL BE TENSIONED TO 36 KIPS, OR APPROXIMATELY 540 FOOT-LB. OF TORQUE (LUBRICATED CONNECTION).

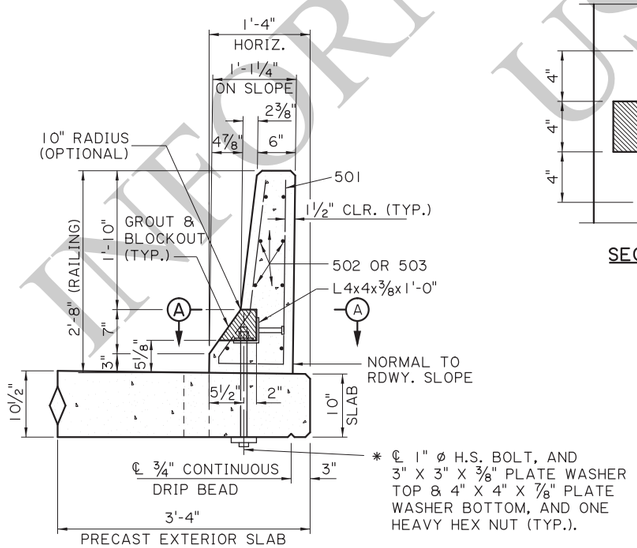

* ℄ 1" ø H.S. BOLT, AND 3" X 3" X ⅜" PLATE WASHER TOP & 4" X 4" X ⅞" PLATE WASHER BOTTOM, AND ONE HEAVY HEX NUT (TYP.).

SECTION A-A
SCALE: 1" = 1'-0"

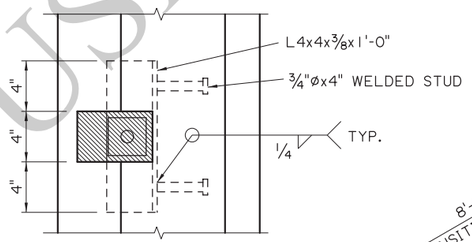

SECTION A-A

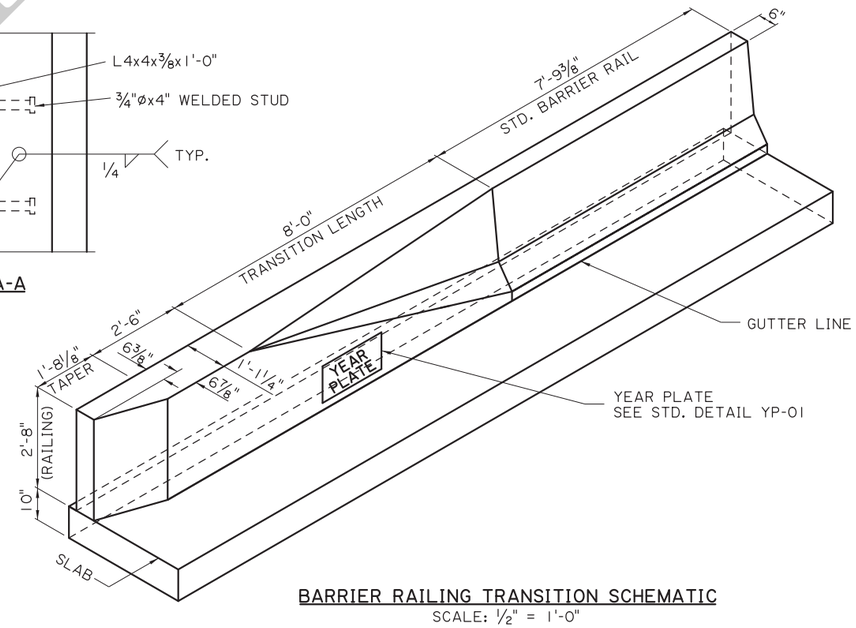

BARRIER RAILING TRANSITION SCHEMATIC
SCALE: ½" = 1'-0"

FOR INFORMATIONAL USE

SHEET NUMBER

PARISH	CONTROL SECTION	STATE PROJECT

DESIGN	B. DELATTE	DETAIL	D. HYMEL	REVIEW
CHECK	J. NAKHLEH	CHECK	J. NAKHLEH	SERIES # 9 OF 11

APPROVED BY CHIEF ENGINEER: DATE: 12/10/2025

NO.	DATE	REVISION OR CHANGE ORDER DESCRIPTION	BY

ALTERNATE SPAN (3 OF 4)
20'-0" PRECAST CONC. BARRIER
24'-0" CLEAR ROADWAY
75° CROSSING TWO WAY TANGENT

PSS-75-24-20SL

DOTD LOUISIANA DEPARTMENT OF TRANSPORTATION & DEVELOPMENT

STANDARD PLAN

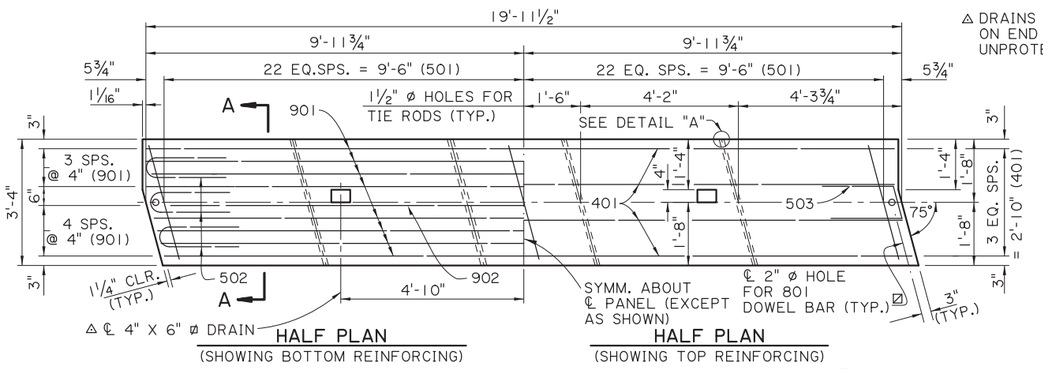

△ DRAINS ARE NOT REQUIRED ON END SPANS OVER UNPROTECTED SLOPES.

⊠ HOLES ARE OPTIONAL AT EXPANSION ENDS.

EXTERIOR UNIT
SCALE: ½" = 1'-0"

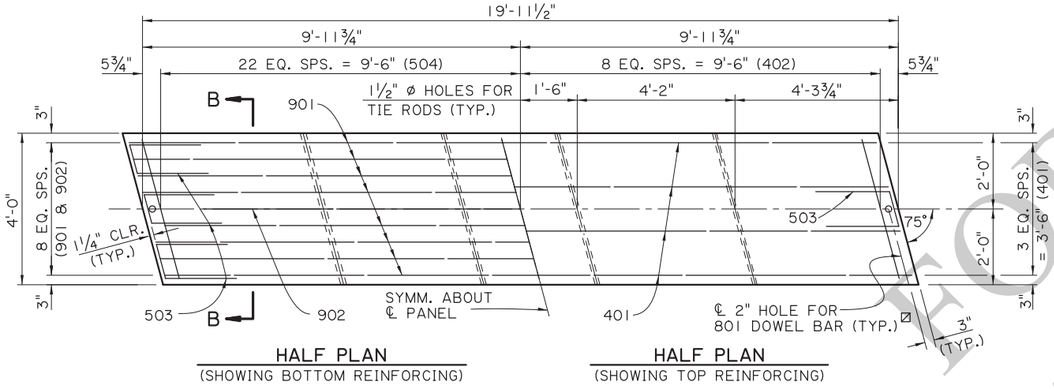

INTERIOR UNIT
SCALE: ½" = 1'-0"

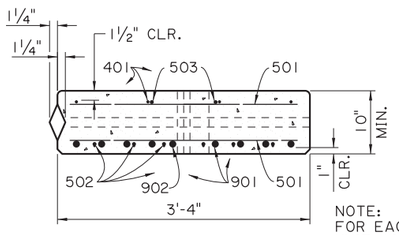

NOTE:
FOR EACH SPAN, ONE EXTERIOR UNIT WILL HAVE A TONGUE AND ONE WILL HAVE A GROOVE.

SECTION A-A
EXTERIOR UNIT
SCALE: 1" = 1'-0"

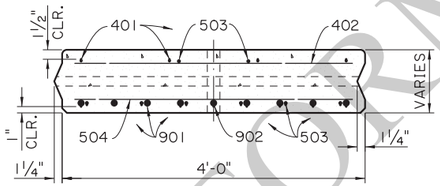

SECTION B-B
INTERIOR UNIT
SCALE: 1" = 1'-0"

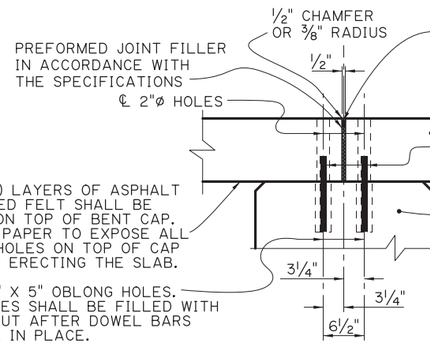

TYPICAL JOINT DETAIL
SCALE: 1" = 1'-0"

NOTES:
FOR ADDITIONAL JOINT DETAILS SEE SHEET OF 2 OF 11.
FOR ½" CHAMFER DETAIL, SEE DETAIL "B", ALTERNATE SPAN 1 OF 4.

AS-DESIGNED RATING		
VEHICLE	RATING FACTOR	NOTES
HL-93 (INV)	1.357	——
HL-93 (OPR)	1.759	——
LADV-11 (INV)	1.044	MAGNIFICATION FACTOR = 1.3

ALTERNATE SPAN NOTES:

DESIGN SPECIFICATIONS : AASHTO LRFD BRIDGE DESIGN SPECIFICATIONS, 4th EDITION, WITH 2008 & 2009 INTERIMS.

DESIGN LOAD: THE BRIDGE DECK IS DESIGNED FOR A FUTURE WEARING COURSE OF 19 PSF. THE LIVE LOAD IS HL-93, AND LADV-11 (LOUISIANA DESIGN VEHICLE LIVE LOAD 2011).

STRUCTURAL CONCRETE: ALL CONCRETE SHALL BE CLASS P1. THE BRIDGE RAIL CONCRETE SHALL BE CLASS A1 IF RAIL IS CAST IN PLACE. STEEL SIDE FORMS AND STEEL OR CONCRETE BOTTOM FORMS SHALL BE USED FOR PRECAST COMPONENTS. EXPOSED EDGES SHALL HAVE A ¾" CHAMFER, UNLESS SPECIFIED OTHERWISE. ALL SURFACES SHALL RECEIVE A CLASS 1 ORDINARY SURFACE FINISH UPON REMOVAL OF THE FORMS. THE FINAL FINISH SHALL BE A FINE FINISH IN ACCORDANCE WITH THE SPECIFICATIONS.

REINFORCING STEEL: ALL REINFORCING STEEL SHALL BE GRADE 60. DIMENSIONS RELATING TO FABRICATION ARE OUT TO OUT OF BARS, UNLESS SPECIFIED OTHERWISE. DIMENSIONS RELATING TO SPACING ARE TO BAR CENTERS, UNLESS SPECIFIED OTHERWISE. ALL REINFORCING BARS SHALL BE PLACED TO PROVIDE A MINIMUMUM COVER OF 1" FROM THE DRAIN HOLES. REINFORCING STEEL MAY BE TACK WELDED FOR A DISTANCE OF NOT MORE THAN 4'-0" FROM EACH END OF UNIT. NO OTHER WELDING SHALL BE PERMITTED.

MISCELLANEOUS STEEL: HIGH STRENGTH BOLTS SHALL CONFORM TO ASTM DESIGNATION A-325. PLATES, TIE RODS, AND DRIFT BOLTS SHALL CONFORM TO ASTM DESIGNATION A709, GRADE 36 (AASHTO M270). STEEL SPECIFIED TO BE ZINC COATED SHALL BE IN CONFORMANCE WITH ASTM DESIGNATION A-123.

GROUT: THE GROUT SHALL BE AN APPROVED FLOWABLE NON-SHRINK GROUT LISTED ON AML. THE GROUT SHALL BE TESTED FOR ACCEPTANCE PRIOR TO USAGE. THE GROUT SHALL ATTAIN A MINIMUM COMPRESSIVE STRENGTH OF 3500 PSI PRIOR TO LOADING SLABS. SURFACES SHALL BE THOROUGHLY SATURATED WITH WATER BY FLOODING THE HOLES FOR APPROXIMATELY FIVE (5) MINUTES IMMEDIATELY BEFORE THE GROUT IS PLACED. ONLY POTABLE WATER SHALL BE USED FOR SATURATION AND MIXING PURPOSES.

PATCHING MATERIAL: THE PATCHING MATERIAL SHALL BE AN APPROVED PATCHING MATERIAL FOR PRECAST OR PRESTREESED CONCRETE PRODUCTS LISTED ON AML(QPL 49). SURFACE PREPARATION, MIXING AND PLACMENT SHALL BE IN ACCORDANCE WITH THE MANUFACTURERS' RECOMMENDATIONS. ONLY POTABLE WATER SHALL BE USED FOR SATURATION AND MIXING PURPOSES.

PRECAST UNITS: THE PLANS FOR AN ONGOING OPERATION OF FABRICATION FACILITIES SHALL BE APPROVED BY THE DEPARTMENT. EACH UNIT SHALL HAVE "LIVE LOAD HL-93 & LADV-11", THE FABRICATOR'S MARK, AND UNIQUE NUMBER, MEETING THE APPROVAL OF THE ENGINEER STAMPED OR INSCRIBED IN THE PLASTIC CONCRETE. PRECAST UNITS MAY BE CAST WITH OR WITHOUT CAMBER. IF CAMBER IS PROVIDED IT SHALL NOT EXCEED ¼" AT THE CENTERLINE OF SPAN. ALL UNITS SHALL BE HELD AT THE PLANT FOR A MINIMUM OF TEN(10) DAYS AFTER CASTING. THE CONCRETE SHALL REACH A MINIMUM STRENGTH OF 3,000 PSI BEFORE HANDLING IS PERMITTED. THE LIFTING INSERTS SHALL BE 1", TYPE S INSERTS AS MANUFACTURED BY DAYTON-SUPERIOR CORPORATION OR AN APPROVED EQUAL. EACH INSERT SHALL HAVE A MINIMUM LOAD CAPACITY OF 10,000 POUNDS . FOUR(4) INSERTS WITH 1" ø X 5" LONG COIL BOLTS SHALL BE PLACED IN THE TOP OF THE UNIT AND LOCATED 1'-3" FROM ITS ENDS AND 1'-0" FROM ITS EDGES. INSERT HOLES SHALL BE GROUT FILLED AFTER PLACEMENT OF UNIT. AT THE CONTRACTOR'S OPTION A SLING OF SUFFICIENT CAPACITY MAY BE USED FOR LIFTING, PROVIDED THE SAME PICKUP LOCATION FROM THE ENDS ARE USED. FABRICATION TOLERANCES SHALL BE AS FOLLOWS:

UNIT DEPTH	± 3/16"
UNIT LENGTH	+ 1/8" AND -½"
OVERALL SPAN WIDTH	± 2"

ALL PRECAST UNITS IN EACH BRIDGE SPAN SHALL BE MATCH CAST IN THE SAME CASTING BED TO ENSURE A PROPER FIT DURING INSTALLATION.

GUARDRAIL: CONFORM TO PROJECT PLANS AND GUARDRAIL STANDARD PLANS.

PAYMENT: ALL WORK WILL BE PAID FOR UNDER THE DESIGNATED BRIDGE SUPERSTRUCTURE AND SUBSTRUCTURE PAY ITEM AND IN ACCORDANCE WITH THE SPECIFICATIONS.

ESTIMATED QUANTITIES (ONE EXTERIOR UNIT)				
BAR	NO.	UNIT LENGTH	TOTAL LENGTH	LOCATION
901	8	19'-8"	157'-4"	LONGIT. BOT. OF SLAB
902	1	18'-11"	18'-11"	LONGIT. BOT. OF SLAB
TOTAL NO. 9 BARS = 176'-3" = 599 LBS.				
801	1	1'-0"	1'-0"	DOWELS
TOTAL NO. 8 BARS = 1'-0" = 3 LBS.				
501	90	3'-1"	277'-6"	TRANS. TOP & BOT. OF SLAB
502	6	4'-6"	27'-0"	BOT. END OF SLAB
503	2	4'-9"	9'-6"	TOP END OF SLAB
TOTAL NO. 5 BARS = 313'-11" = 327 LBS.				
401	4	19'-8"	78'-8"	LONGIT. TOP OF SLAB
TOTAL NO. 4 BARS = 78'-8" = 53 LBS.				
DEFORMED REINFORCING STEEL = 982 LBS.				
CLASS P1 CONCRETE = 2.05 CU. YDS. ⊙				
CONCRETE RAILING (PER SPAN) = 40.00 LIN. FT.				

ESTIMATED QUANTITIES (ONE INTERIOR UNIT)				
BAR	NO.	UNIT LENGTH	TOTAL LENGTH	LOCATION
901	8	19'-8"	157'-4"	LONGIT. BOT. OF SLAB
902	1	18'-11"	18'-11"	LONGIT. BOT. OF SLAB
TOTAL NO. 9 BARS = 176'-3" = 599 LBS.				
801	1	1'-0"	1'-0"	DOWELS
TOTAL NO. 8 BARS = 1'-0" = 3 LBS.				
503	8	4'-9"	38'-0"	TOP & BOT. END OF SLAB
504	44	3'-9"	165'-3"	TRANS. BOT. OF SLAB
TOTAL NO. 5 BARS = 203'-0" = 212 LBS.				
401	4	19'-8"	78'-8"	LONGIT. TOP OF SLAB
402	17	3'-9"	63'-9"	TRANS. TOP OF SLAB
TOTAL NO. 4 BARS = 142'-5" = 95 LBS.				
DEFORMED REINFORCING STEEL = 909 LBS.				
CLASS P1 CONCRETE = 2.46 CU. YDS. ⊙				

⊙ BASED ON A 10" SLAB THICKNESS

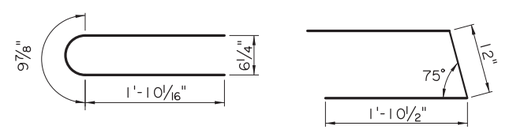

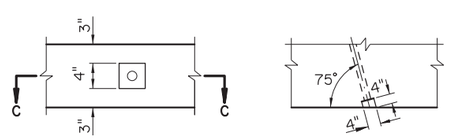

DETAIL "A"
TYP. EXTERIOR EDGE ONLY
SCALE: 1" = 1'-0"

SHEET NUMBER

PARISH	CONTROL SECTION	STATE PROJECT

DESIGN	CHECK	DETAIL	CHECK	REVIEW	SERIES #
J. NAKHLEH	B. DELATTE	D. HYMEL	J. NAKHLEH		10 OF 11

APPROVED BY CHIEF ENGINEER: DATE: 12/10/2025

NO.	DATE	REVISION OR CHANGE ORDER DESCRIPTION	BY

STATE OF LOUISIANA — DEPARTMENT OF TRANSPORTATION AND DEVELOPMENT

ALTERNATE SPAN (4 OF 4)
20'-0" PRECAST CONC. SLAB UNIT
24'-0" CLEAR ROADWAY
75° CROSSING TWO WAY TANGENT

PSS-75-24-20SL

DOTD
LOUISIANA DEPARTMENT OF TRANSPORTATION & DEVELOPMENT

STANDARD PLAN

INFORMATIONAL

IP_PWP:d1246417\SS7524altspan4(LRFD).dgn
11/24/2025 15:1

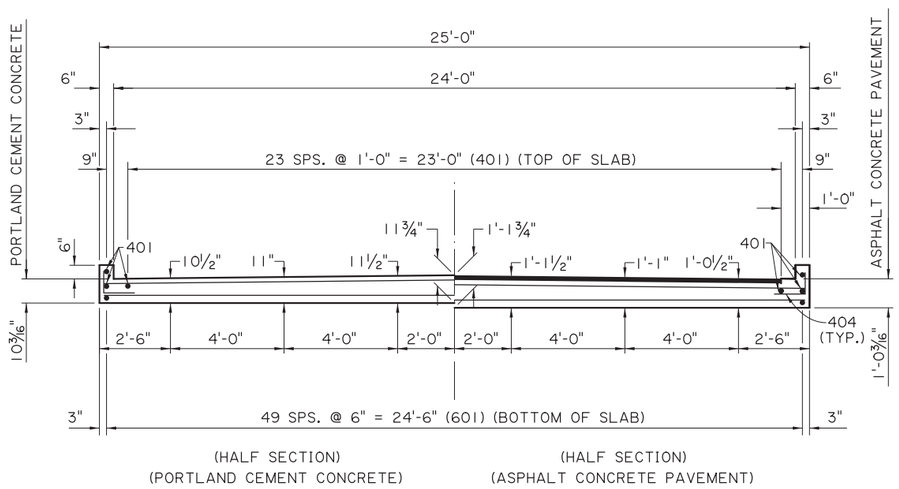

SECTION A-A
SCALE: ⅜" = 1'-0"

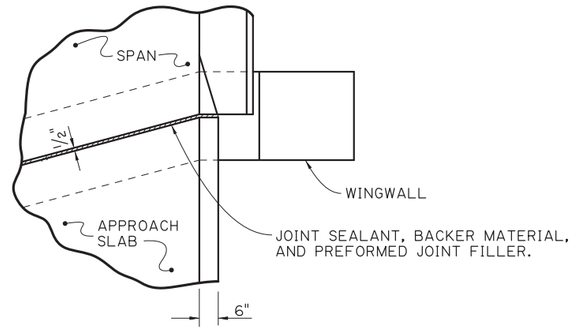

JOINT DETAIL
N.T.S.

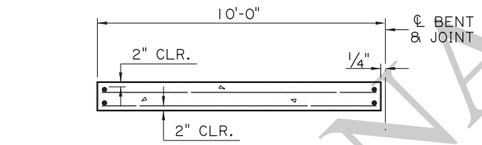

(FOR PORTLAND CEMENT CONCRETE ROADWAY PAVEMENT)

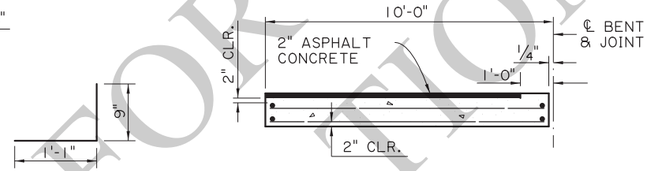

(FOR ASPHALT CONCRETE ROADWAY PAVEMENT)

403
2" ø PIN

SECTION ALONG ℄ ROADWAY
SCALE : ¼" = 1'-0"

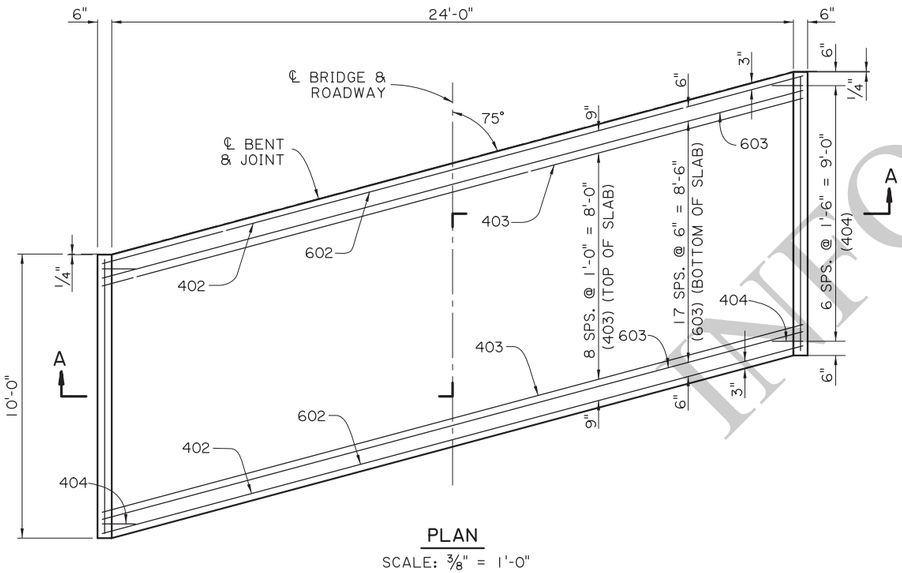

PLAN
SCALE: ⅜" = 1'-0"

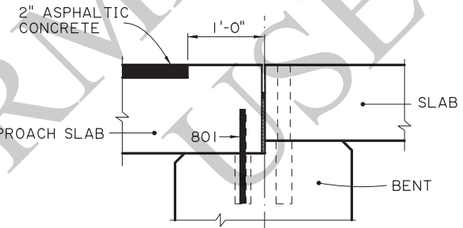

DETAIL A
SCALE: 1" = 1'-0"
(ASPHALT CONCRETE PAVEMENT OPTION)

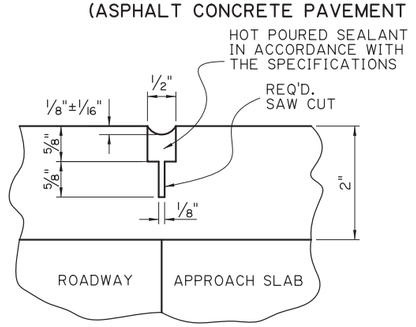

SAWING & SEALING JOINT DETAIL
N.T.S.

ESTIMATED QUANTITIES (ONE SLAB)				
BAR	NO.	UNIT LENGTH	TOTAL LENGTH	LOCATION
801	6	1'-0"	6'-0"	DOWELS
TOTAL NO. 8 BARS = 6'-0" = 16 LBS.				
601	50	9'-7"	479'-2"	LONGIT. BOT. OF SLAB
602	2	25'-5"	50'-10"	TRANSV. BOT. OF SLAB
603	18	25'-6"	459'-0"	TRANSV. BOT. OF SLAB
TOTAL NO. 6 BARS = 989'-0" = 1,485 LBS.				
401	28	9'-7"	268'-4"	LONGIT. TOP OF SLAB & CURB
402	2	25'-5"	50'-10"	TRANSV. TOP OF SLAB
403	9	25'-6"	229'-6"	TRANSV. TOP OF SLAB
404	14	1'-10"	25'-8"	DOWELS IN CURB
TOTAL NO. 4 BARS = 574'-4" = 384 LBS.				
⊙ TOTAL DEFORMED REINFORCING STEEL= 1,885 LBS.				
CONCRETE APPROACH SLAB = 27.78 SQ. YDS.				
⊙☑ ASPHALT CONCRETE = 2.5 TONS				
⊙☑ SAW CUT & SEAL = 24 LIN. FT.				

⊙ TO BE PAID FOR UNDER ITEM CONCRETE APPROACH SLABS.
☑ REQUIRED WHEN APPROACH SLAB IS ADJACENT TO ASPHALT CONCRETE PAVEMENT.

APPROACH SLAB NOTES:

DESIGN SPECIFICATIONS: AASHTO LRFD BRIDGE DESIGN SPECIFICATIONS, 4th EDITION, WITH 2008 & 2009 INTERIMS.

STRUCTURAL CONCRETE: ALL CONCRETE SHALL BE CLASS A1. EXPOSED EDGES SHALL HAVE A ¾" CHAMFER, UNLESS SPECIFIED OTHERWISE.

REINFORCING STEEL: ALL REINFORCING STEEL SHALL BE GRADE 60. DIMENSIONS RELATING TO THE FABRICATION ARE OUT-TO-OUT OF BARS, UNLESS SPECIFIED OTHERWISE. DIMENSIONS RELATING TO SPACING ARE TO BAR CENTERS, UNLESS SPECIFIED OTHERWISE.

BEDDING MATERIAL: FOR DETAILS OF BEDDING MATERIAL AND UNDERDRAINS, SEE APPROACH SLAB STANDARD DETAILS.

SAWING & SEALING: THE ASPHALT CONCRETE SHALL BE SAW CUT AT THE END OF THE CONCRETE APPROACH SLAB THE ENTIRE ROADWAY WIDTH AND SEALED WHICH WILL BE PAID FOR UNDER THE DESIGNATED ROADWAY PAY ITEM.
PAYMENT: ALL OTHER WORK WILL BE PAID FOR UNDER THE DESIGNATED BRIDGE CONCRETE APPROACH SLAB PAY ITEM AND IN ACCORDANCE WITH THE SPECIFICATIONS.

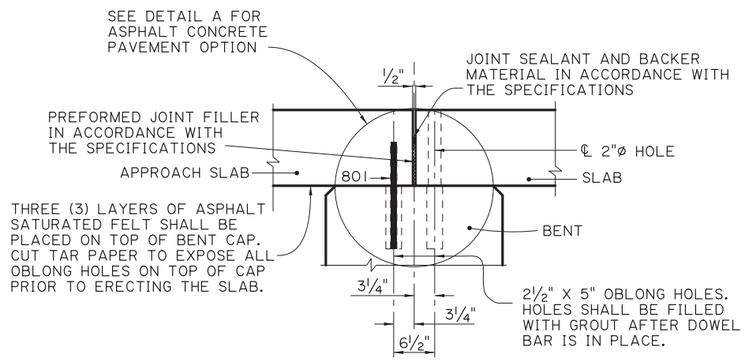

TYPICAL JOINT DETAIL
SCALE: 1" = 1'-0"

NOTE: FOR ADDITIONAL JOINT DETAILS SEE SHEET 2 OF 11.

SHEET NUMBER

PARISH	CONTROL SECTION	STATE PROJECT

DESIGN	B. DELATTE
CHECK	J. NAKHLEH
DETAIL	D. HYMEL
CHECK	J. NAKHLEH
REVIEW	
SERIES #	11 OF 11

APPROVED BY CHIEF ENGINEER:
DATE: 12/10/2025

NO.	DATE	REVISION OR CHANGE ORDER DESCRIPTION	BY

STATE OF LOUISIANA DEPARTMENT OF TRANSPORTATION & DEVELOPMENT

ALTERNATE APPROACH SLAB
10'-0" CAST-IN-PLACE
24'-0" CLEAR ROADWAY
75° CROSSING TWO WAY TANGENT

PSS-75-24-20SL

DOTD
LOUISIANA DEPARTMENT OF TRANSPORTATION & DEVELOPMENT

STANDARD PLAN

FOR INFORMATIONAL USE

11/24/2025 17:0
IP_PWP:d1246417\SS7524altaprslab(LRFD).dgn

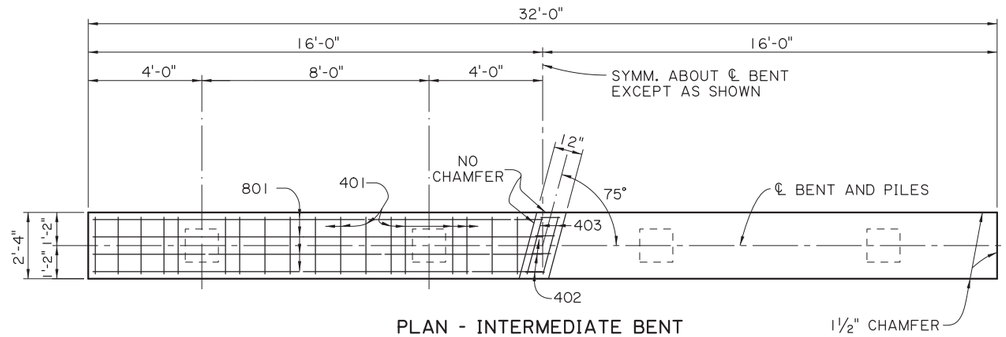

PLAN - INTERMEDIATE BENT

SCALE ⅜" = 1'-0"

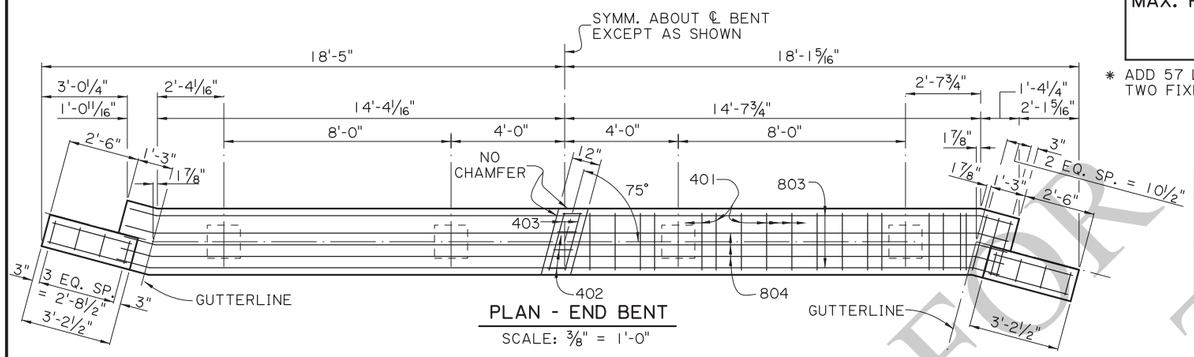

PLAN - END BENT

SCALE: ⅜" = 1'-0"

ESTIMATED QUANTITIES (ONE INTER. BENT)				
BAR	NO.	UNIT LENGTH	TOTAL LENGTH	LOCATION
801	7	31'-8"	221'-8"	LONGIT. IN CAP
802	9	8'-10"	79'-6"	LONGIT. IN CAP
TOTAL NO. 8 BARS = 301'-2" = 804 LBS.				
601	19	2'-0"	38'-0"	DOWELS
TOTAL NO. 6 BARS = 38'-0" = 57 LBS.				
501	2	31'-8"	63'-4"	LONGIT. IN CAP
TOTAL NO. 5 BARS = 63'-4" = 66 LBS.				
401	52	8'-2"	302'-2"	STIRRUPS IN CAP
402	4	3'-4"	13'-4"	STIRRUPS IN RISER
403	2	2'-1"	4'-2"	LONGIT. IN RISER
TOTAL NO. 4 BARS = 319'-8" = 214 LBS.				
* TOTAL DEFORMED REINFORCING STEEL = 1,084 LBS.				
⊖ CLASS A1 CONCRETE = 5.36 CU. YDS.				
MAX. PILE LOAD: SERVICE DEAD LOAD = 24 TONS SERVICE LIVE LOAD = 36 TONS FACTORED TOTAL LOAD = 82 TONS				

* ADD 57 LBS. OF REINFORCING STEEL (19-601 DOWELS) WHEN TWO FIXED ENDS OCCUR ON THE SAME BENT.

ESTIMATED QUANTITIES (ONE END BENT)				
BAR	NO.	UNIT LENGTH	TOTAL LENGTH	LOCATION
802	9	8'-10"	79'-6"	LONGIT. IN CAP
803	4	31'-0"	124'-0"	LONGIT. IN CAP
804	3	31'-0"	93'-0"	LONGIT. IN CAP
TOTAL NO. 8 BARS = 296'-0" = 792 LBS.				
601	19	2'-0"	38'-0"	DOWELS
TOTAL NO. 6 BARS = 38'-0" = 57 LBS.				
502	2	31'-0"	62'-0"	LONGIT. IN CAP
TOTAL NO. 5 BARS = 62'-0" = 65 LBS.				
401	39	8'-2"	318'-6"	STIRRUPS IN CAP
402	4	3'-4"	13'-4"	STIRRUPS IN RISER
403	2	2'-1"	4'-2"	LONGIT. IN RISER
404	8	8'-9"	70'-0"	STIRRUPS IN WINGWALL
405	8	2'-10"	22'-8"	LONGIT. IN WINGWALL
406	12	4'-0"	48'-0"	LONGIT. IN WINGWALL
TOTAL NO. 4 BARS = 476'-8" = 318 LBS.				
TOTAL DEFORMED REINFORCING STEEL = 1,232 LBS.				
⊖ CLASS A1 CONCRETE = 6.10 CU. YDS.				
MAX. PILE LOAD: SERVICE DEAD LOAD = 24 TONS SERVICE LIVE LOAD = 36 TONS FACTORED TOTAL LOAD = 82 TONS				

⊖ 16" ø PPC PILES USED FOR ESTIMATING PURPOSES ONLY. (ADD 0.05 CU. YDS. OF CLASS A1 CONCRETE PER BENT WHEN 14" ø PPC PILES ARE USED.)

AS-DESIGNED RATING		
VEHICLE	RATING FACTOR	NOTES
HL-93 (INV)	1.459	——
HL-93 (OPR)	1.891	——
LADV-11 (INV)	1.122	MAGNIFICATION FACTOR = 1.3

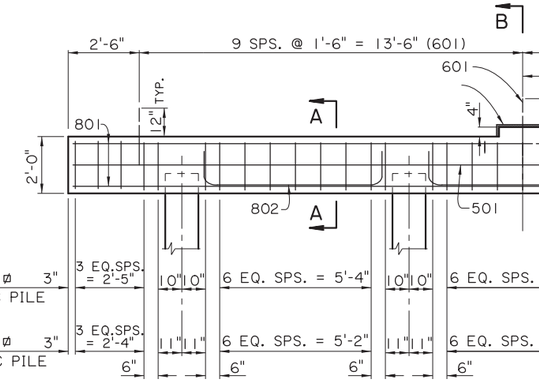

HALF ELEVATION - INTERMEDIATE BENT

SCALE ⅜" = 1'-0"

HALF ELEVATION - END BENT

SCALE ⅜" = 1'-0"

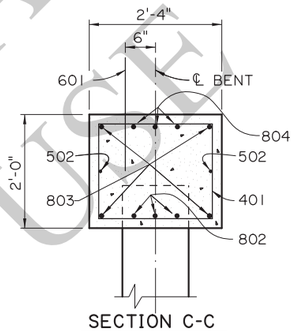

SECTION C-C

SCALE: ¾" = 1'-0"

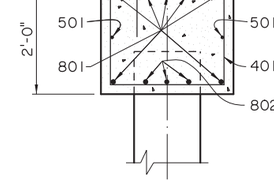

SECTION A-A

SCALE: ¾" = 1'-0"

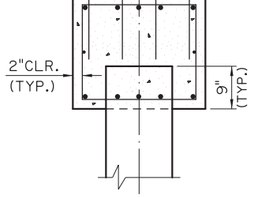

SECTION B-B

SCALE: ¾" = 1'-0"

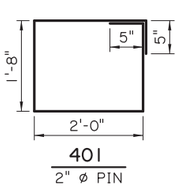

401
2" ø PIN

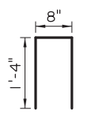

402
2" ø PIN

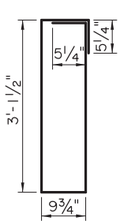

404
2" ø PIN

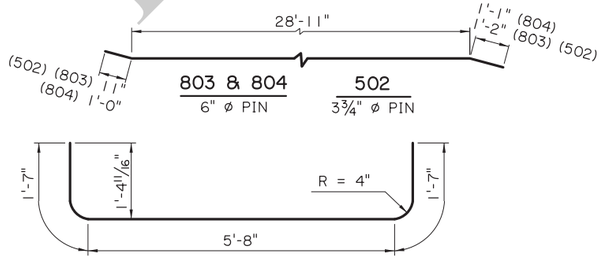

802
6" ø PIN

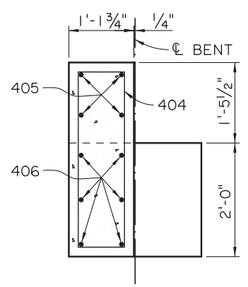

END ELEVATION

SCALE ¾" = 1'-0"

NOTES:

DESIGN SPECIFICATIONS: AASHTO LRFD BRIDGE DESIGN SPECIFICATIONS 4th EDITION, WITH 2008 & 2009 INTERIMS.

DESIGN LOAD: LIVE LOAD IS HL-93, AND LADV-11 (LOUISIANA DESIGN VEHICLE LIVE LOAD 2011).

STRUCTURAL CONCRETE: ALL CONCRETE SHALL BE CLASS A1. EXPOSED EDGES SHALL HAVE A ¾" CHAMFER UNLESS SPECIFIED OTHERWISE. ALL EXPOSED FACES OF WINGWALLS AND ENDS OF CAPS SHALL RECEIVE A SURFACE FINISH AS PER THE SPECIFICATIONS.

REINFORCING STEEL: ALL REINFORCING SHALL BE GRADE 60. DIMENSIONS RELATING TO FABRICATION ARE OUT TO OUT OF BARS, UNLESS SPECIFIED OTHERWISE. DIMENSIONS RELATING TO SPACING ARE TO BAR CENTERS, UNLESS SPECIFIED OTHERWISE. DOWELS (601 BARS) SHALL BE PROVIDED AT ALL FIXED BEARINGS AND APPROACH SLAB BEARINGS (SEE GENERAL PLAN). POSED ENDS OF DOWELS SHALL BE WRAPPED WITH TWO LAYERS OF 15 LB. ASPHALT SATURATED FELT. CLOSE FITTING TUBES OF COMPRESSIBLE MATERIAL NOT LESS THAN 3/16" THICK MAY BE SUBSTITUTED.

PRECAST CONCRETE PILES: CONFORM TO PILE STANDARD PLAN AND PROJECT PLANS FOR FABRICATION AND INSTALLATION. PILES WILL BE PAID FOR UNDER THE DESIGNATED PILE PAY ITEMS.

PREFORMED JOINT MATERIAL: PREFORMED JOINT MATERIAL SHALL BE IN ACCORDANCE WITH THE SPECIFICATIONS.

PAYMENT: ALL OTHER WORK WILL BE PAID FOR UNDER THE DESIGNATED BRIDGE SUPERSTRUCTURE AND SUBSTRUCTURE PAY ITEM AND IN ACCORDANCE WITH THE SPECIFICATIONS.

PRELIMINARY FOR INFORMATION ONLY NOT FOR CONSTRUCTION

SHEET NUMBER

PARISH | CONTROL SECTION | STATE PROJECT

DESIGN J. NAKHLEH | CHECK K. WASCOM | DETAIL D. HYMEL | CHECK J. NAKHLEH | REVIEW | SERIES # 1 OF 11

APPROVED BY CHIEF ENGINEER: DATE: 12/10/2025

NO.	DATE	REVISION OR CHANGE ORDER DESCRIPTION	BY

BENTS
REINFORCED CONCRETE PILE BENTS
28'-0" CLEAR ROADWAY
75° CROSSING TWO WAY TANGENT

PSS-75-28-20SL

DOTD LOUISIANA DEPARTMENT OF TRANSPORTATION & DEVELOPMENT

STANDARD PLAN

11/24/2025 15:2.

IP_PWP:d1246418\SS7528bent(LRFD).dgn

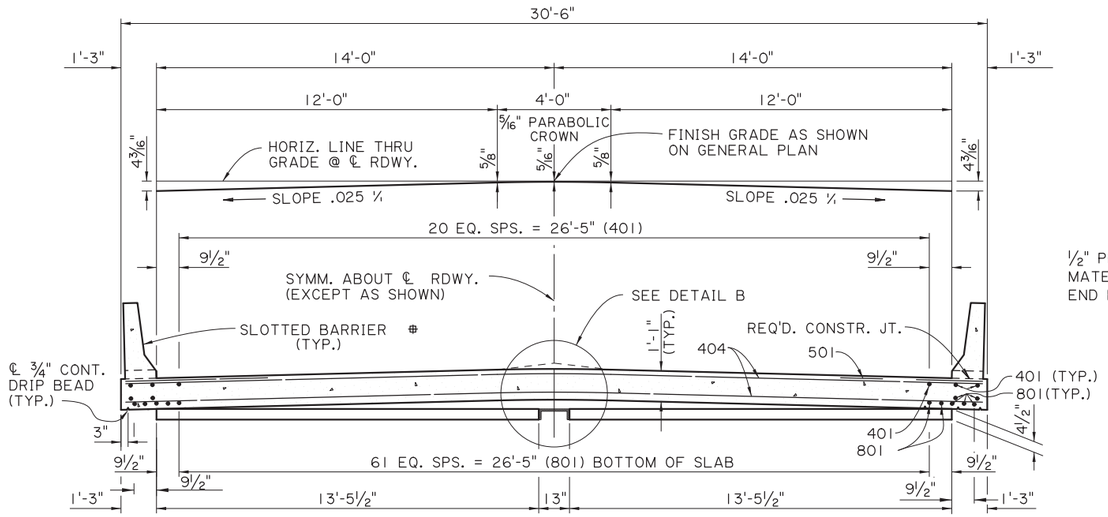

SECTION A-A

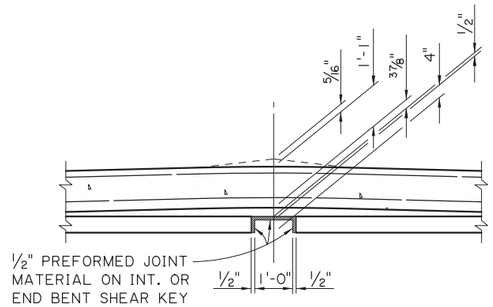

DETAIL B

SCALE : ½" = 1'-0"

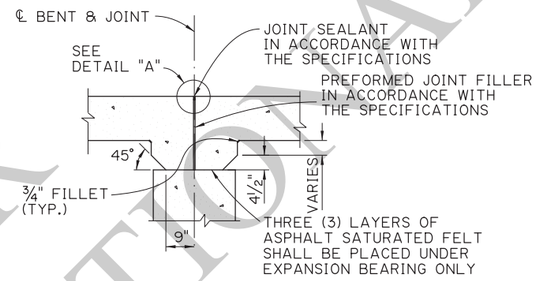

DETAIL SHOWING TYPICAL JOINT & HAUNCH

SCALE : ½" = 1'-0"

ESTIMATED QUANTITIES (ONE SPAN)				
BAR	NO.	UNIT LENGTH	TOTAL LENGTH	LOCATION
801	70	19'-7"	1370'-10"	LONGIT. BOT. OF SLAB
TOTAL NO. 8 BARS = 1370'-10" = 3660 LBS.				
501	56	5'-0"	280'-0"	TRANS. TOP OF SLAB
TOTAL NO. 5 BARS = 280'-0" = 292 LBS.				
401	25	19'-7"	489'-7"	LONGIT. TOP OF SLAB
402	4	30'-4"	121'-4"	TRANS. TOP & BOT. OF SLAB
403	52	31'-2"	1620'-8"	TRANS. TOP & BOT. OF SLAB
TOTAL NO. 4 BARS = 2231'-7" = 1491 LBS.				
TOTAL DEFORMED REINFORCING STEEL = 5277 LBS.				
CLASS A1 CONCRETE = 25.47 CU. YDS.				
CONCRETE RAILING (BARRIER TYPE) = 40.00 LIN. FT.				

SPAN NOTES:

DESIGN SPECIFICATIONS:
AASHTO LRFD BRIDGE DESIGN SPECIFICATIONS, 4th EDITION, WITH 2008 & 2009 INTERIMS.

DESIGN LOADS:
THE BRIDGE DECK IS DESIGNED FOR A FUTURE WEARING COURSE OF 19 PSF. THE LIVE LOAD IS HL-93, AND LADV-11 (LOUISIANA DESIGN VEHICLE LIVE LOAD 2011).

STRUCTURAL CONCRETE:
ALL CONCRETE SHALL BE CLASS A1. EXPOSED EDGES SHALL HAVE A ¾" CHAMFER UNLESS SPECIFIED OTHERWISE. ALL BARRIER RAIL SURFACES ARE TO RECEIVE A CLASS 3 SPECIAL FINISH.

REINFORCING STEEL:
ALL REINFORCING SHALL BE GRADE 60; DIMENSIONS RELATING TO SPACING ARE TO BAR CENTERS, DIMENSIONS RELATING TO FABRICATION ARE OUT TO OUT OF BARS, UNLESS SPECIFIED OTHERWISE. ALL REINFORCING BARS SHALL BE PLACED TO PROVIDE A MINIMUM COVER OF ONE INCH FROM THE SURFACE OF THE DRAIN HOLES TO THE FACE OF THE BARS.

GUARD RAIL:
CONFORM TO PROJECT PLANS AND GUARD RAIL STANDARD PLANS.

PAYMENT:
ALL WORK WILL BE PAID FOR UNDER THE DESIGNATED BRIDGE SUPERSTRUCTURE AND SUBSTRUCTURE PAY ITEM AND IN ACCORDANCE WITH THE SPECIFICATIONS.

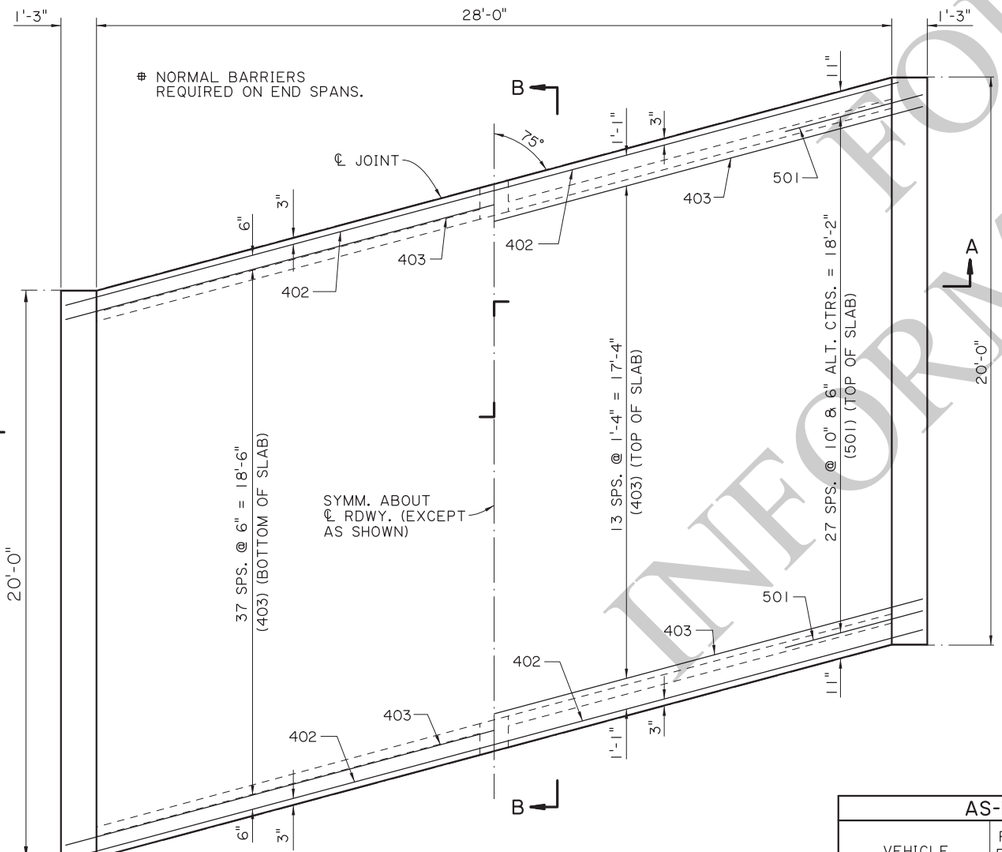

HALF PLAN

SHOWING SPACING OF BOTTOM TRANS. REINF. STEEL

SCALE : ⅜" = 1'-0"

HALF PLAN

SHOWING SPACING OF TOP TRANS. REINF. STEEL

SCALE : ⅜" = 1'-0"

AS-DESIGNED RATING		
VEHICLE	RATING FACTOR	NOTES
HL-93 (INV)	1.398	——
HL-93 (OPR)	1.812	——
LADV-11 (INV)	1.075	MAGNIFICATION FACTOR = 1.3

* MEASURED PARALLEL TO ℄ ROADWAY

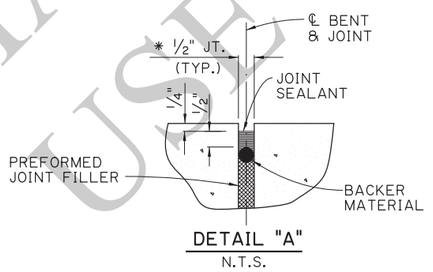

DETAIL "A"

N.T.S.

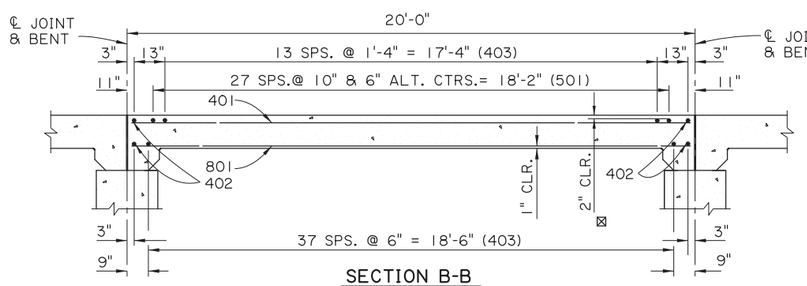

SECTION B-B

SCALE ⅜" = 1'-0"

⊠ FOR BRIDGES IN DISTRICT 04 & 05, MINIMUM CONCRETE COVER IN TOP OF SLAB SHALL BE 2½".

FOR INFORMATIONAL USE

SHEET NUMBER

PARISH	CONTROL SECTION	STATE PROJECT

DESIGN	CHECK	DETAIL	CHECK	REVIEW	SERIES # 2 OF 11
J. NAKHLEH	B. DELATTE	D. HYMEL	J. NAKHLEH		

APPROVED BY CHIEF ENGINEER: DATE: 12/10/2025

NO.	DATE	REVISION OR CHANGE ORDER DESCRIPTION	BY

SPAN (1 OF 2)
20' CONCRETE SLAB SPAN

28'-0" CLEAR ROADWAY
75° CROSSING TWO WAY TANGENT

PSS-75-28-20SL

DOTD LOUISIANA DEPARTMENT OF TRANSPORTATION & DEVELOPMENT

STANDARD PLAN

IP_PWP:d1246418\SS7528span1(LRFD).dgn
11/18/2025 14:4

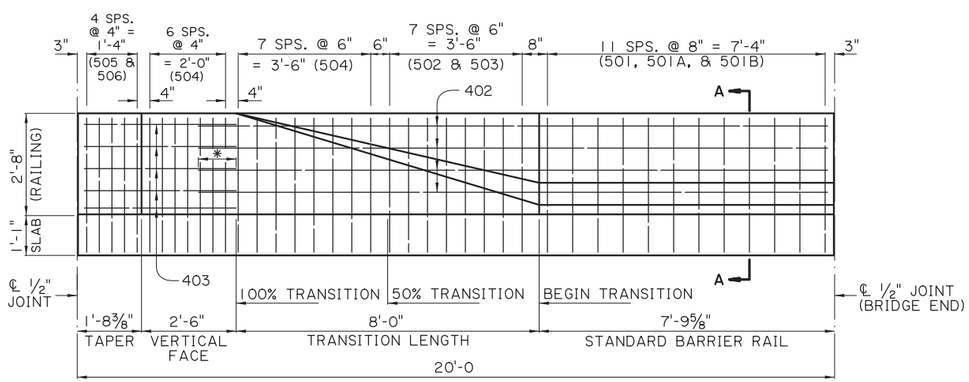

* 1'-0" (MIN.) SPLICE

BARRIER RAILING TRANSITION ELEVATION
(SHOWING BARRIER RAILING AT END OF BRIDGE)
SCALE: ½" = 1'-0"

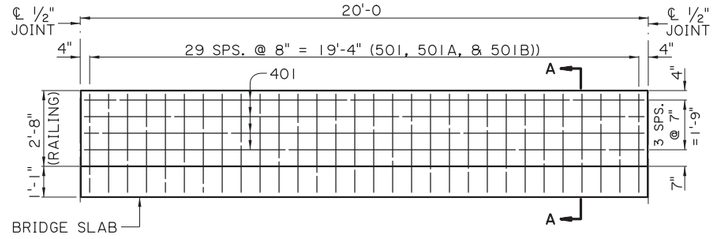

STANDARD BARRIER RAILING ELEVATION
(SHOWING BARRIER RAILING ALONG BRIDGE SLAB)
SCALE: ⅜" = 1'-0"

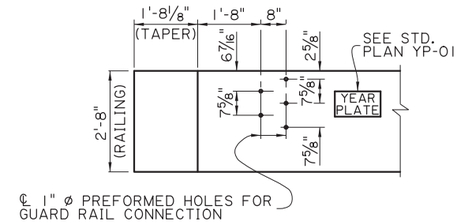

GUARD RAIL CONNECTION DETAIL
CONFORM TO GUARD RAIL STANDARD PLANS
SCALE: ½" = 1'-0"

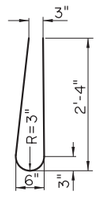

BARS 501
(4'-10" LONG)

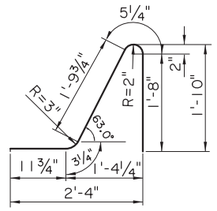

BARS 501A
(5'-2" LONG)

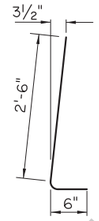

BARS 501B
(2½" ø PIN)
(3'-0" LONG)

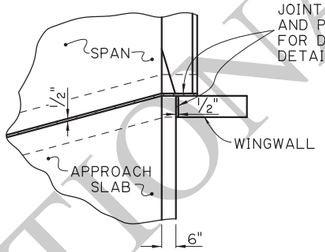

JOINT DETAIL
SCALE : ⅜" = 1'-0"

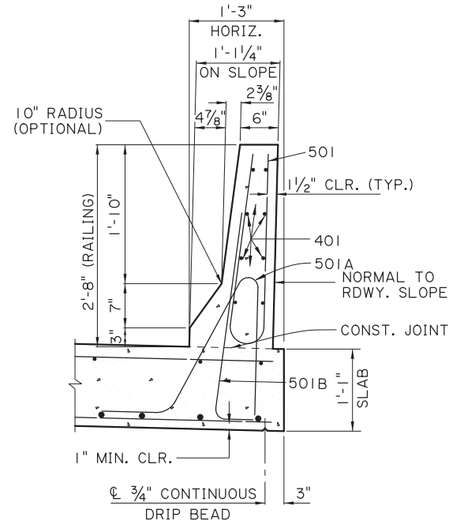

SECTION A-A
SCALE: 1" = 1'-0"

△ ON SLOPE

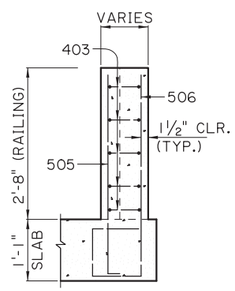

TAPER

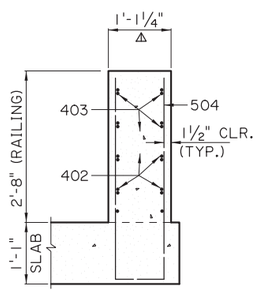

100 % TRANSITION

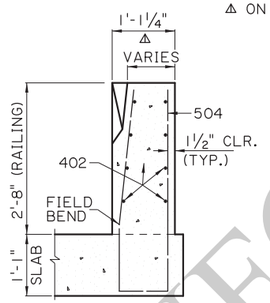

FROM 50% TO 100 % TRANSITION

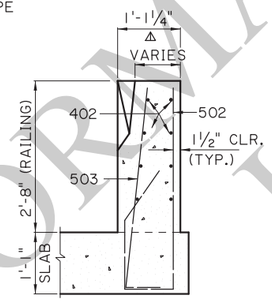

FROM BEGIN TO 50 % TRANSITION

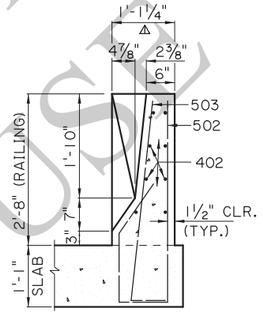

BEGIN TRANSITION

BARRIER RAILING TRANSITION SECTIONS
SCALE: ¾" = 1'-0"

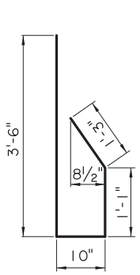

502
(2½" ø PIN)

503
(2½" ø PIN)

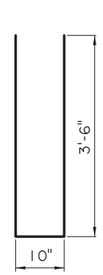

504
(2½" ø PIN)

505
(2½" ø PIN)

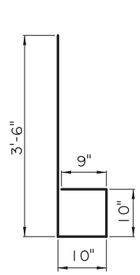

506
(2½" ø PIN)

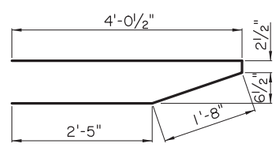

403
(2" ø PIN)

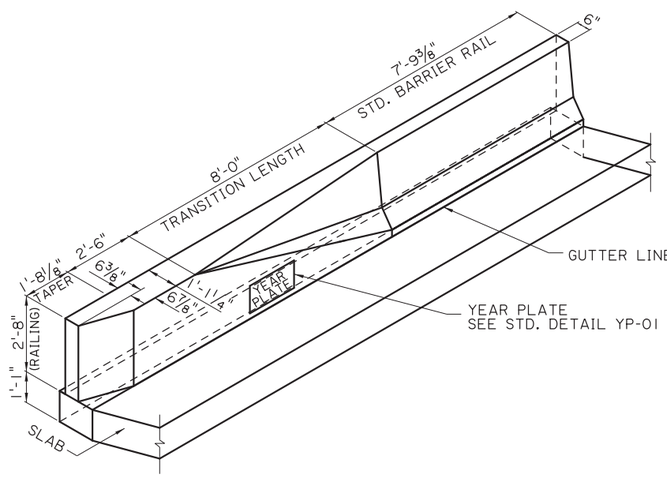

BARRIER RAILING TRANSITION SCHEMATIC
SCALE: ⅜" = 1'-0"

FOR INFORMATIONAL USE

SHEET NUMBER

PARISH	CONTROL SECTION	STATE PROJECT

DESIGN	B. DELATTE	DETAIL	D. HYMEL	REVIEW	SERIES # 3 OF 11
CHECK	J. NAKHLEH	CHECK	J. NAKHLEH		

APPROVED BY CHIEF ENGINEER: DATE: 12/10/2025

NO.	DATE	REVISION OR CHANGE ORDER DESCRIPTION	BY

SPAN (2 OF 2)
20'-0" CONCRETE BARRIER

28'-0" CLEAR ROADWAY
75° CROSSING TWO WAY TANGENT

PSS-75-28-20SL

LOUISIANA DEPARTMENT OF TRANSPORTATION & DEVELOPMENT

STANDARD PLAN

11/18/2025 14:4

IP_PWP:d1246418\SS7528span2(LRFD).dgn

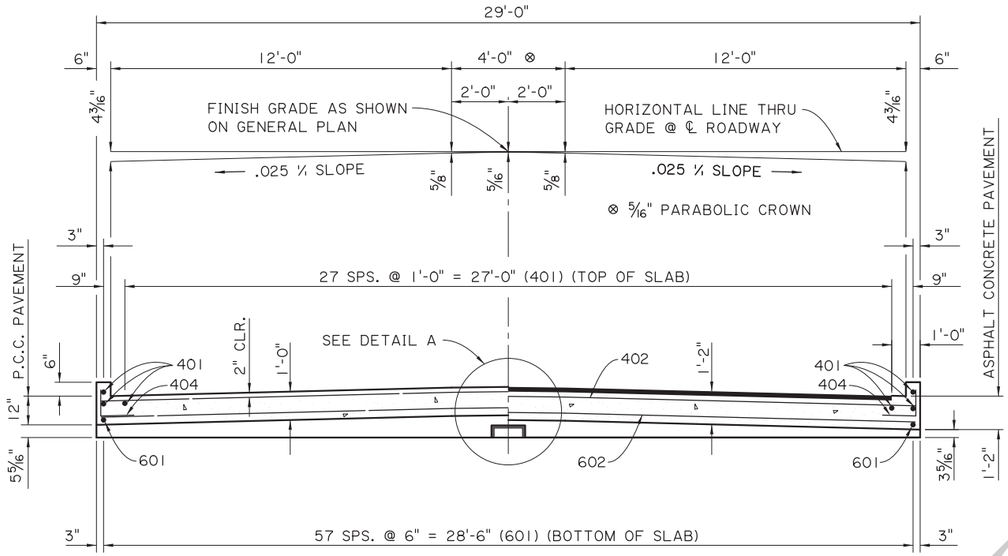

SECTION A-A

SCALE 3/8" = 1'-0"

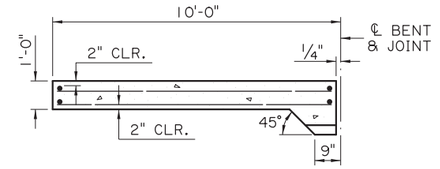

(FOR PORTLAND CEMENT CONCRETE ROADWAY PAVEMENT)

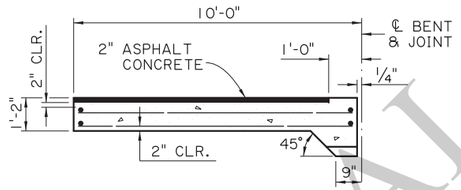

(FOR ASPHALT CONCRETE ROADWAY PAVEMENT)

SECTION ALONG ℄ ROADWAY

SCALE: 3/8" = 1'-0"

ESTIMATED QUANTITIES (ONE SLAB)				
BAR	NO.	UNIT LENGTH	TOTAL LENGTH	LOCATION
601	58	9'-7"	555'-10"	LONGIT. BOT. OF SLAB
602	2	29'-6"	59'-0"	TRANSV. BOT. OF SLAB
603	18	29'-8"	534'-0"	TRANSV. BOT. OF SLAB
TOTAL NO. 6 BARS = 1,148'-10" = 1,726 LBS.				
401	32	9'-7"	306'-8"	LONGIT. TOP OF SLAB & CURB
402	2	29'-6"	59'-0"	TRANSV. TOP OF SLAB
403	9	29'-8"	267'-0"	TRANSV. TOP OF SLAB
404	14	2'-0"	28'-0"	DOWELS IN CURB
TOTAL NO. 4 BARS = 660'-8" = 441 LBS.				
⊙ TOTAL DEFORMED REINFORCING STEEL = 2,167 LBS.				
CONCRETE APPROACH SLAB = 32.22 SQ. YDS.				
⊙ ☒ ASPHALT CONCRETE = 3.0 TONS				
⊙ ☒ SAW CUT & SEAL = 28 LIN. FT.				

⊙ TO BE PAID FOR UNDER ITEM CONCRETE APPROACH SLABS.

☒ REQUIRED WHEN APPROACH SLAB IS ADJACENT TO ASPHALT CONCRETE PAVEMENT.

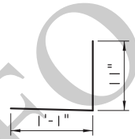

404

2" ø PIN

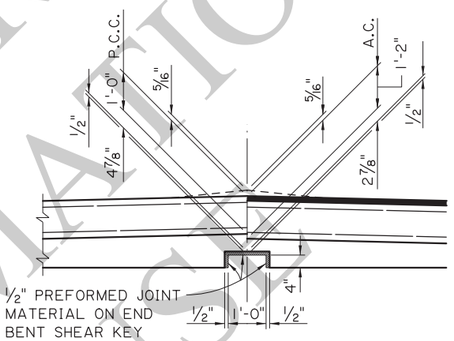

DETAIL A

SCALE : 1/2" = 1'-0"

APPROACH SLAB NOTES:

DESIGN SPECIFICATIONS: AASHTO LRFD BRIDGE DESIGN SPECIFICATIONS 4th EDITION, WITH 2008 & 2009 INTERIMS.

STRUCTURAL CONCRETE: ALL CONCRETE SHALL BE CLASS A1. EXPOSED EDGES SHALL HAVE A 3/4" CHAMFER, UNLESS SPECIFIED OTHERWISE.

ASPHALT CONCRETE: TO BE THE SAME TYPE AS THE ASPHALT CONCRETE USED FOR THE APPROACH ROADWAY PAVEMENT OR OVERLAY.

REINFORCING STEEL: ALL REINFORCING STEEL SHALL BE GRADE 60. DIMENSIONS RELATING TO THE FABRICATION ARE OUT-TO-OUT OF BARS, UNLESS SPECIFIED OTHERWISE. DIMENSIONS RELATING TO SPACING ARE TO BAR CENTERS.

BEDDING MATERIAL: FOR DETAILS OF BEDDING MATERIAL AND UNDERDRAINS SEE APPROACH SLAB STANDARD DETAILS.

SAWING & SEALING: THE ASPHALT CONCRETE SHALL BE SAW CUT AT THE END OF THE CONCRETE APPROACH SLAB THE ENTIRE ROADWAY WIDTH AND SEALED WHICH WILL BE PAID FOR UNDER THE DESIGNATED ROADWAY PAY ITEM.

PAYMENT: ALL OTHER WORK WILL BE PAID FOR UNDER THE DESIGNATED BRIDGE CONCRETE APPROACH SLAB PAY ITEM AND IN ACCORDANCE WITH THE SPECIFICATIONS.

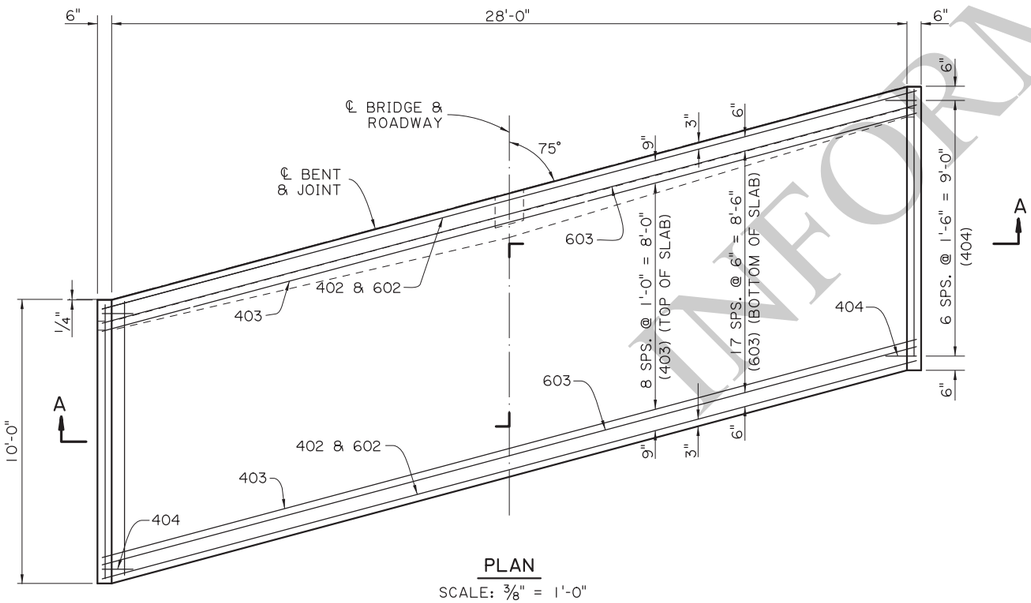

PLAN

SCALE: 3/8" = 1'-0"

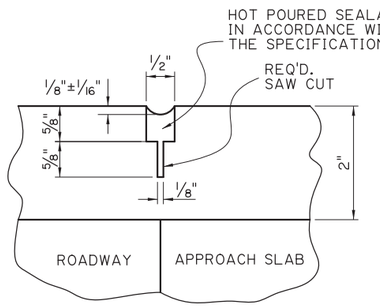

SAWING & SEALING JOINT DETAIL

N.T.S.

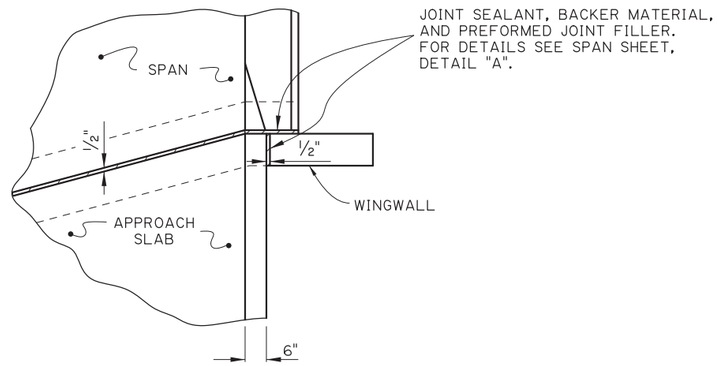

JOINT DETAIL

SCALE : 3/8" = 1'-0"

FOR INFORMATIONAL USE

SHEET NUMBER

PARISH | CONTROL SECTION | STATE PROJECT

DESIGN J. NAKHLEH | CHECK B. DELATTE | DETAIL D. HYMEL | CHECK J. NAKHLEH | REVIEW | SERIES # 4 OF 11

APPROVED BY CHIEF ENGINEER: DATE: 12/10/2025

REVISION OR CHANGE ORDER DESCRIPTION | NO. | DATE | BY

STATE OF LOUISIANA DEPARTMENT OF TRANSPORTATION AND DEVELOPMENT

APPROACH SLAB
10'-0" CONCRETE APPROACH SLAB
28'-0" CLEAR ROADWAY
75° CROSSING TWO WAY TANGENT

PSS-75-28-20SL

DOTD LOUISIANA DEPARTMENT OF TRANSPORTATION & DEVELOPMENT

STANDARD PLAN

11/24/2025 17:0
IP_PWP:d1246418\SS7528aprslab(LRFD).dgn

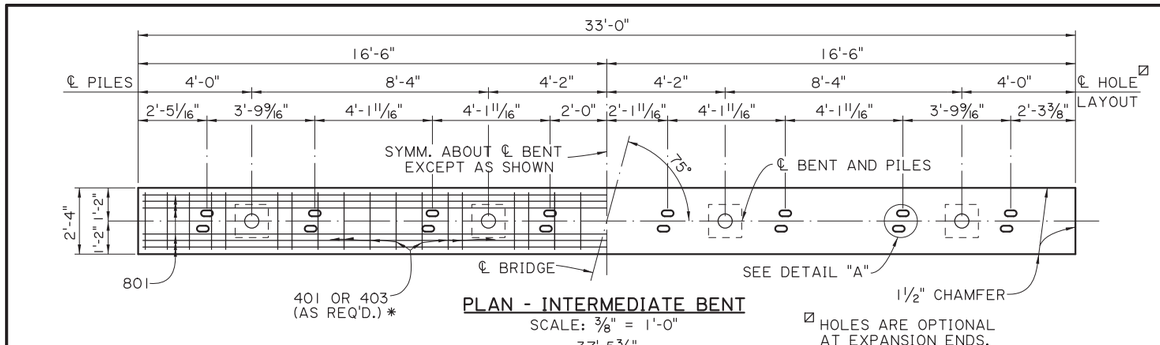

PLAN - INTERMEDIATE BENT

SCALE: 3/8" = 1'-0"

☑ HOLES ARE OPTIONAL AT EXPANSION ENDS.

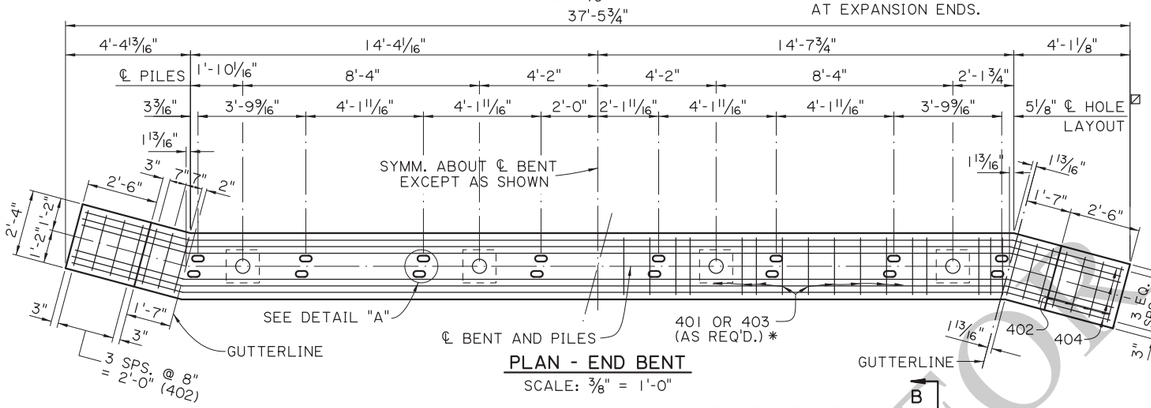

PLAN - END BENT

SCALE: 3/8" = 1'-0"

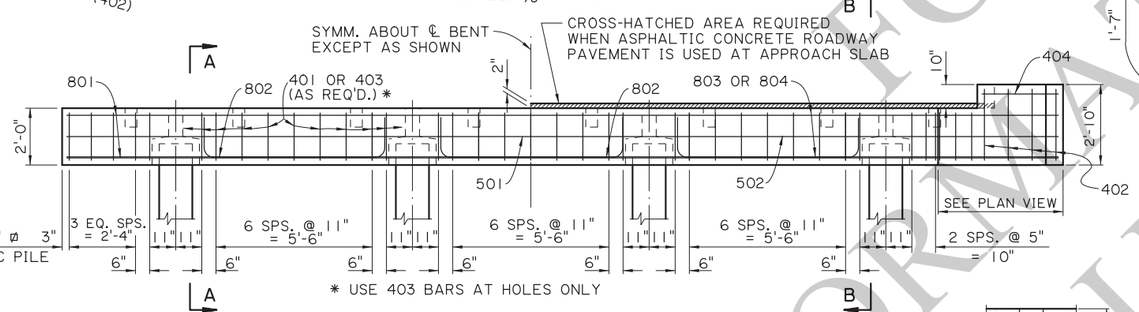

HALF ELEVATION - INTERMEDIATE BENT

SCALE: 3/8" = 1'-0"

HALF ELEVATION - END BENT

SCALE: 3/8" = 1'-0"

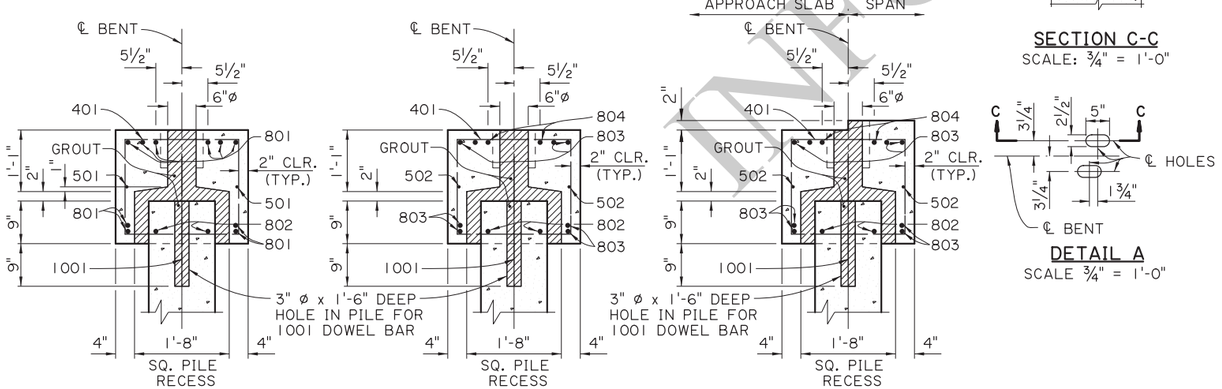

SECTION A-A

SCALE: 3/4" = 1'-0"

SECTION B-B

SCALE: 3/4" = 1'-0"
(WHEN PORTLAND CEMENT CONCRETE ROADWAY PAVEMENT IS USED AT APPROACH SLAB)

SECTION B-B

SCALE: 3/4" = 1'-0"
(WHEN ASPHALTIC CONCRETE ROADWAY PAVEMENT IS USED AT APPROACH SLAB)

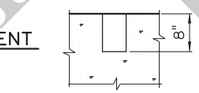

SECTION C-C

SCALE: 3/4" = 1'-0"

DETAIL A

SCALE 3/4" = 1'-0"

ESTIMATED QUANTITIES (ONE INTER. BENT)

BAR	NO.	UNIT LENGTH	TOTAL LENGTH	LOCATION
1001	4	2'-4"	9'-4"	DOWELS IN PILES
TOTAL NO. 10 BARS = 9'-4" = 40 LBS.				
801	10	32'-8"	326'-8"	LONGIT. IN CAP
802	6	9'-0"	54'-0"	LONGIT. IN CAP BTW. PILES
TOTAL NO. 8 BARS = 380'-8" = 1,016 LBS.				
501	2	32'-8"	65'-4"	LONGIT. IN CAP
TOTAL NO. 5 BARS = 65'-4" = 68 LBS.				
401	29	8'-2"	236'-10"	STIRRUPS IN CAP
403	8	6'-6"	52'-0"	STIRRUPS IN CAP
TOTAL NO. 4 BARS = 288'-10" = 193 LBS.				
TOTAL DEFORMED REINFORCING STEEL = 1,317 LBS.				
TOTAL CLASS P1 CONCRETE = 5.25 CU. YDS.				
MAX. PILE LOAD: SERVICE DEAD LOAD = 20 TONS SERVICE LIVE LOAD = 38 TONS FACTORED TOTAL LOAD = 81 TONS				
TOTAL GROUT FOR PILE RECESSES = 0.28 CU. YDS.				

ESTIMATED QUANTITIES (ONE END BENT)

BAR	NO.	UNIT LENGTH	TOTAL LENGTH	LOCATION
1001	4	2'-4"	9'-4"	DOWELS IN PILES
TOTAL NO. 10 BARS = 9'-4" = 40 LBS.				
802	6	9'-0"	54'-0"	LONGIT. IN CAP BTW. PILES
803	6	36'-9"	220'-6"	LONGIT. IN CAP
804	4	36'-9"	147'-6"	LONGIT. IN CAP
TOTAL NO. 8 BARS = 421'-6" = 1,121 LBS.				
502	2	36'-9"	73'-6"	LONGIT. IN CAP
TOTAL NO. 5 BARS = 73'-6" = 77 LBS.				
401	29	8'-2"	236'-10"	STIRRUPS IN CAP
402	8	9'-10"	78'-8"	STIRRUPS IN WINGWALL
403	10	6'-6"	65'-0"	STIRRUPS IN CAP
404	8	2'-2"	17'-4"	LONGIT. IN WINGWALL
TOTAL NO. 4 BARS = 397'-10" = 266 LBS.				
TOTAL DEFORMED REINFORCING STEEL = 1,504 LBS.				
TOTAL CLASS P1 CONCRETE = 6.33 CU. YDS.				
MAX. PILE LOAD: SERVICE DEAD LOAD = 20 TONS SERVICE LIVE LOAD = 38 TONS FACTORED TOTAL LOAD = 81 TONS				
TOTAL GROUT FOR PILE RECESSES = 0.28 CU. YDS.				

⊗ ADD 0.23 CU. YDS. OF CLASS P1 CONCRETE PER BENT WHEN ASPHALTIC CONCRETE ROADWAY PAVEMENT IS USED AT APPROACH SLAB.

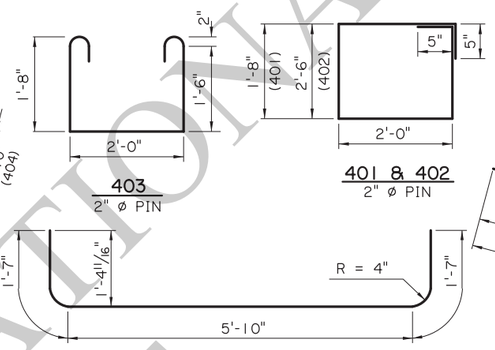

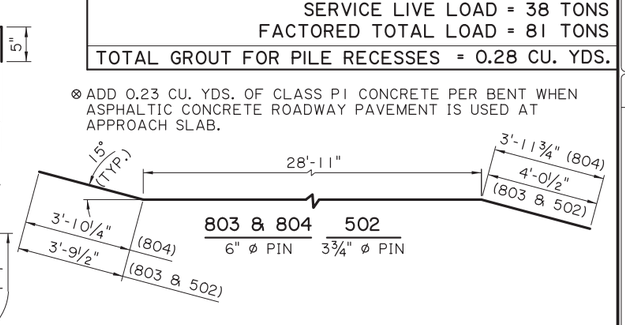

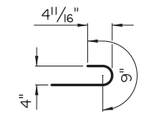

180° HOOK FOR 403 BARS

3" ø PIN

AS-DESIGNED RATING

VEHICLE	RATING FACTOR	NOTES
HL-93 (INV)	1.904	——
HL-93 (OPR)	2.468	——
LADV-11 (INV)	1.465	MAGNIFICATION FACTOR = 1.3

ALTERNATE BENT NOTES:

DESIGN SPECIFICATIONS: AASHTO LRFD BRIDGE DESIGN SPECIFICATIONS, 4th EDITION, WITH 2008 & 2009 INTERIMS.
DESIGN LOAD: LIVE LOAD IS HL-93, AND LADV-11 (LOUISIANA DESIGN VEHICLE LIVE LOAD 2011).
STRUCTURAL CONCRETE: ALL CONCRETE SHALL BE CLASS P1. STEEL SIDE FORMS AND STEEL OR CONCRETE BOTTOM FORMS SHALL BE USED FOR PRECAST COMPONENTS. EXPOSED EDGES SHALL HAVE A 3/4" CHAMFER UNLESS SPECIFIED OTHERWISE. ALL SURFACES SHALL RECEIVE A CLASS 1 ORDINARY SURFACE FINISH UPON REMOVAL OF THE FORMS. ALL EXPOSED FACES OF WINGWALLS AND ENDS OF CAPS SHALL RECEIVE A CLASS 3 SPECIAL FINISH.
REINFORCING STEEL: ALL REINFORCING SHALL BE GRADE 60. DIMENSIONS RELATING TO FABRICATION ARE OUT TO OUT OF BARS, UNLESS SPECIFIED OTHERWISE. DIMENSIONS RELATING TO SPACING ARE TO BAR CENTERS, UNLESS SPECIFIED OTHERWISE.
GROUT: THE GROUT SHALL BE AN APPROVED FLOWABLE NON-SHRINK GROUT LISTED ON AML. THE GROUT SHALL BE TESTED FOR ACCEPTANCE PRIOR TO USAGE. SURFACES SHALL BE THOROUGHLY SATURATED WITH WATER BY FLOODING THE VOID FOR APPROXIMATELY 5 MINUTES IMMEDIATELY BEFORE THE GROUT IS PLACED. ONLY POTABLE WATER SHALL BE USED FOR SATURATION AND MIXING PURPOSES.
PRECAST UNITS: THE PLANS FOR AN ONGOING OPERATION OF FABRICATING FACILITIES SHALL BE APPROVED BY THE DEPARTMENT. EACH UNIT SHALL HAVE THE FABRICATOR'S MARK AND UNIQUE NUMBER, MEETING THE APPROVAL OF THE ENGINEER, STAMPED OR SCRIBED IN THE PLASTIC CONCRETE. ALL UNITS SHALL BE HELD AT THE PLANT FOR A MINIMUM OF 10 DAYS AFTER CASTING. THE CONCRETE SHALL REACH A MINIMUM STRENGTH OF 3,000 PSI BEFORE HANDLING IS PERMITTED. THE LIFTING INSERTS SHALL BE 1" TYPE S INSERTS AS MANUFACTURED BY DAYTON-SUPERIOR CORPORATION OR AN APPROVED EQUAL. EACH INSERT SHALL HAVE A MINIMUM LOAD CAPACITY OF 10,000 POUNDS. FOUR INSERTS WITH 1" ø x 5" LONG COIL BOLTS SHALL BE PLACED IN THE TOP OF THE UNITS AND LOCATED AT A DISTANCE 21% OF ITS LENGTH (+/- 6") FROM EACH END AND 6" FROM THE EDGES. INSERT HOLES SHALL BE GROUT FILLED AFTER PLACEMENT OF THE UNIT. AT THE CONTRACTOR'S OPTION, A SLING OF SUFFICIENT CAPACITY MAY BE USED FOR LIFTING, PROVIDED THE SAME PICKUP LOCATIONS FROM THE ENDS ARE USED.
PRECAST CONCRETE PILES: CONFORM TO PILE STANDARD PLAN AND PROJECT PLANS FOR FABRICATION AND INSTALLATION. IF TOP CENTER OF DRIVEN PILE IS OUTSIDE OF SPECIFIED HORIZONTAL TOLERANCES BUT WITHIN SPECIFIED VERTICAL TOLERANCES, PROVIDE CAST-IN-PLACE BENT CAP IN ACCORDANCE WITH THIS STANDARD PLAN. PILES WILL BE PAID FOR UNDER THE DESIGNATED PILE PAY ITEMS.
PAYMENT: ALL OTHER WORK WILL BE PAID FOR UNDER THE DESIGNATED BRIDGE SUPERSTRUCTURE AND SUBSTRUCTURE PAY ITEM AND IN ACCORDANCE WITH THE SPECIFICATIONS.

FOR INFORMATION USE

SHEET NUMBER

PARISH | CONTROL SECTION | STATE PROJECT

DESIGN J. NAKHLEH | CHECK K. WASCOM | DETAIL D. HYMEL | CHECK J. NAKHLEH | REVIEW J. NAKHLEH | SERIES # 5 OF 11

APPROVED BY CHIEF ENGINEER: DATE: 12/10/2025

NO. | DATE | REVISION OR CHANGE ORDER DESCRIPTION | BY

STATE OF LOUISIANA DEPARTMENT OF TRANSPORTATION AND DEVELOPMENT

ALTERNATE BENTS
PRECAST CONCRETE BENTS
28'-0" CLEAR ROADWAY
75° CROSSING TWO WAY TANGENT

PSS-75-28-20SL

DOTD LOUISIANA DEPARTMENT OF TRANSPORTATION & DEVELOPMENT

STANDARD PLAN

11/24/2025 15:2

IP_PWP:d1246418\SS7528altbent1(LRFD).dgn

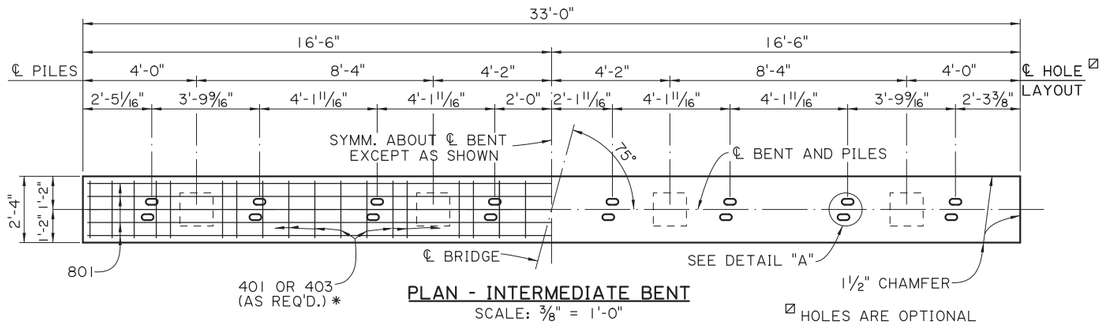

PLAN - INTERMEDIATE BENT

SCALE: 3/8" = 1'-0"

⊠ HOLES ARE OPTIONAL AT EXPANSION ENDS.

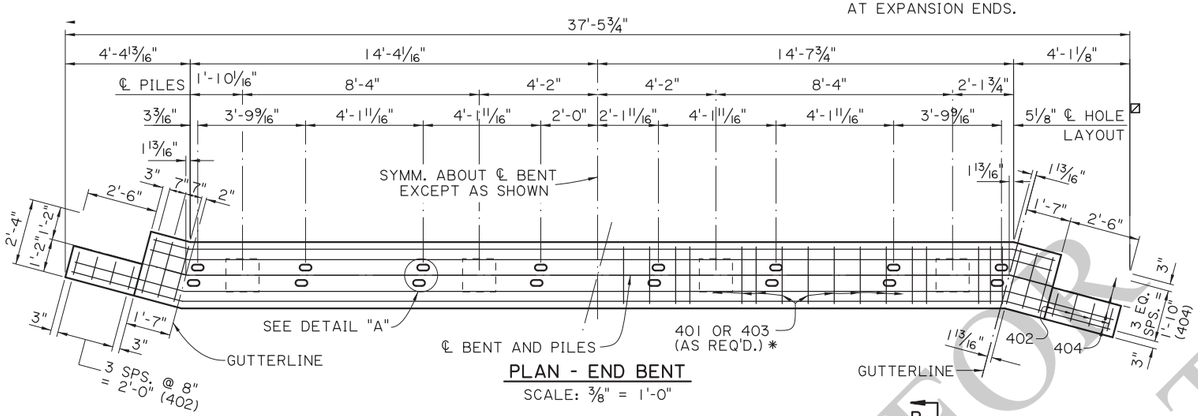

PLAN - END BENT

SCALE: 3/8" = 1'-0"

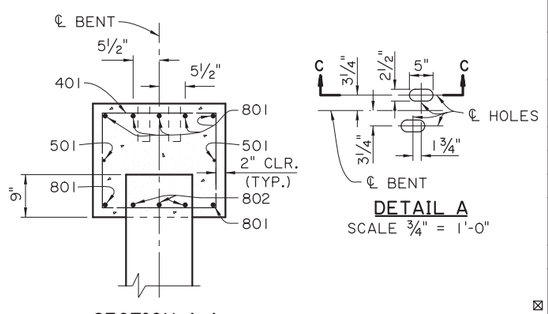

SECTION A-A

SCALE: 3/4" = 1'-0"

DETAIL A

SCALE 3/4" = 1'-0"

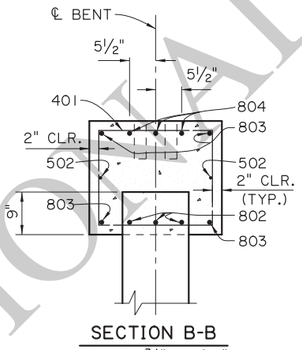

SECTION B-B

SCALE: 3/4" = 1'-0"

(WHEN PORTLAND CEMENT CONCRETE ROADWAY PAVEMENT IS USED AT APPROACH SLAB)

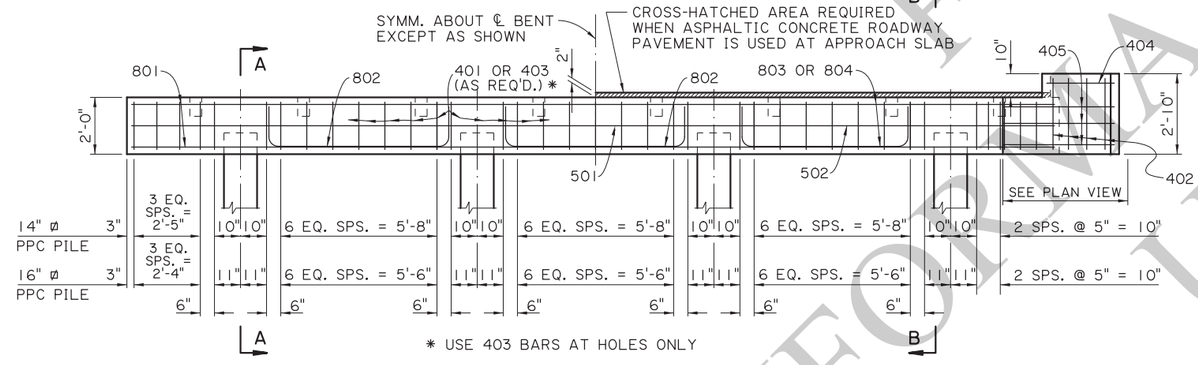

HALF ELEVATION - INTERMEDIATE BENT

SCALE 3/8" = 1'-0"

HALF ELEVATION - END BENT

SCALE 3/8" = 1'-0"

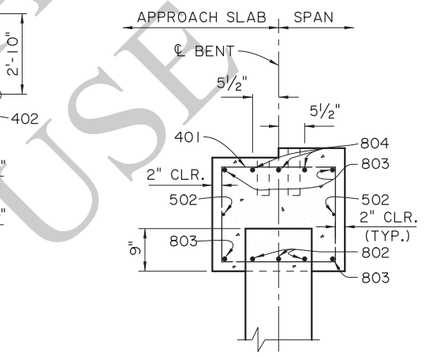

SECTION B-B

SCALE: 3/4" = 1'-0"

(WHEN ASPHALTIC CONCRETE ROADWAY PAVEMENT IS USED AT APPROACH SLAB)

AS-DESIGNED RATING		
VEHICLE	RATING FACTOR	NOTES
HL-93 (INV)	1.518	——
HL-93 (OPR)	1.967	——
LADV-11 (INV)	1.168	MAGNIFICATION FACTOR = 1.3

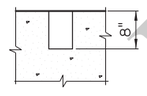

SECTION C-C

SCALE 3/4" = 1'-0"

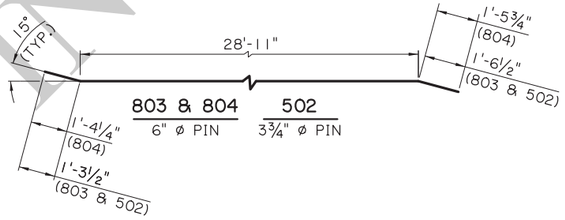

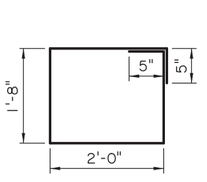

401
2" ø PIN

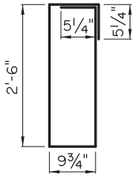

402
2" ø PIN

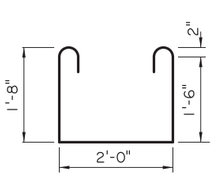

403
2" ø PIN

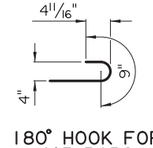

180° HOOK FOR 403 BARS
3" ø PIN

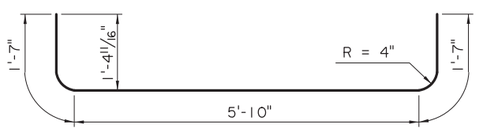

802
6" ø PIN

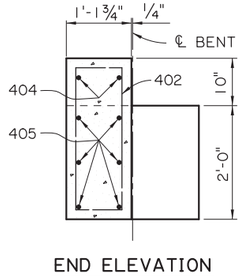

END ELEVATION

SCALE: 3/4" = 1'-0"

ESTIMATED QUANTITIES (ONE INTER. BENT)				
BAR	NO.	UNIT LENGTH	TOTAL LENGTH	LOCATION
801	7	32'-8"	228'-8"	LONGIT. IN CAP
802	9	9'-0"	81'-0"	LONGIT. IN CAP BTW. PILES
TOTAL NO. 8 BARS = 309'-8" = 827 LBS.				
501	2	32'-8"	65'-4"	LONGIT. IN CAP
TOTAL NO. 5 BARS = 65'-4" = 68 LBS.				
401	29	8'-2"	236'-10"	STIRRUPS IN CAP
403	8	6'-6"	52'-0"	STIRRUPS IN CAP
TOTAL NO. 4 BARS = 288'-10" = 193 LBS.				
TOTAL DEFORMED REINFORCING STEEL = 1,088 LBS.				
⊠ TOTAL CLASS A1 CONCRETE = 5.51 CU. YDS.				
MAX. PILE LOAD: SERVICE DEAD LOAD = 20 TONS SERVICE LIVE LOAD = 38 TONS FACTORED TOTAL LOAD = 81 TONS				

⊠ 16" ø PPC PILES USED FOR ESTIMATING PURPOSES ONLY. (ADD 0.05 CU. YDS. OF CLASS A1 CONCRETE PER BENT WHEN 14" ø PPC PILES ARE USED.)

ESTIMATED QUANTITIES (ONE END BENT)				
BAR	NO.	UNIT LENGTH	TOTAL LENGTH	LOCATION
802	9	9'-0"	81'-0"	LONGIT. IN CAP BTW. PILES
803	4	31'-9"	127'-0"	LONGIT. IN CAP
804	3	31'-9"	95'-3"	LONGIT. IN CAP
TOTAL NO. 8 BARS = 303'-0" = 810 LBS.				
502	2	31'-9"	63'-6"	LONGIT. IN CAP
TOTAL NO. 5 BARS = 63'-6" = 66 LBS.				
401	29	8'-2"	236'-10"	STIRRUPS IN CAP
402	8	7'-6"	60'-0"	STIRRUPS IN WINGWALL
403	10	6'-6"	65'-0"	STIRRUPS IN CAP
404	4	2'-2"	8'-8"	LONGIT. IN WINGWALL
405	12	3'-11"	47'-0"	LONGIT. IN WINGWALL
TOTAL NO. 4 BARS = 417'-6" = 279 LBS.				
TOTAL DEFORMED REINFORCING STEEL = 1,155 LBS.				
⊗ TOTAL CLASS A1 CONCRETE = 5.96 CU. YDS.				
MAX. PILE LOAD: SERVICE DEAD LOAD = 20 TONS SERVICE LIVE LOAD = 38 TONS FACTORED TOTAL LOAD = 81 TONS				

⊗ 16" ø PPC PILES USED FOR ESTIMATING PURPOSES ONLY. (ADD 0.05 CU. YDS. OF CLASS A1 CONCRETE PER BENT WHEN 14" ø PPC PILES ARE USED.) ADD 0.23 CU. YDS. OF CLASS A1 CONCRETE PER BENT WHEN ASPHALTIC CONCRETE ROADWAY PAVEMENT IS USED AT APPROACH SLAB.

ALTERNATE BENT NOTES:

DESIGN SPECIFICATIONS: AASHTO LRFD BRIDGE DESIGN SPECIFICATIONS, 4th EDITION, WITH 2008 & 2009 INTERIMS.

DESIGN LOAD: LIVE LOAD IS HL-93. AND LADV-11 (LOUISIANA DESIGN VEHICLE LIVE LOAD 2011).

STRUCTURAL CONCRETE: ALL CONCRETE SHALL BE CLASS A1. EXPOSED EDGES SHALL HAVE A 3/4" CHAMFER UNLESS SPECIFIED OTHERWISE. ALL EXPOSED FACES OF WINGWALLS AND ENDS OF CAPS SHALL RECEIVE A SURFACE FINISH AS PER THE SPECIFICATIONS UNLESS SPECIFIED OTHERWISE.

REINFORCING STEEL: ALL REINFORCING SHALL BE GRADE 60. DIMENSIONS RELATING TO FABRICATION ARE OUT TO OUT OF BARS, UNLESS OTHERWISE NOTED. DIMENSIONS RELATING TO SPACING ARE TO BAR CENTERS, UNLESS SPECIFIED OTHERWISE.

PRECAST CONCRETE PILES: CONFORM TO PILE STANDARD PLAN AND PROJECT PLANS FOR FABRICATION AND INSTALLATION. PILES WILL BE PAID FOR UNDER THE DESIGNATED PILE PAY ITEMS.

PAYMENT: ALL OTHER WORK WILL BE PAID FOR UNDER THE DESIGNATED BRIDGE SUPERSTRUCTURE AND SUBSTRUCTURE PAY ITEM AND IN ACCORDANCE WITH THE SPECIFICATIONS.

SHEET NUMBER

PARISH | CONTROL SECTION | STATE PROJECT

DESIGN J. NAKHLEH | CHECK K. WASCOM | DETAIL D. HYMEL | CHECK J. NAKHLEH | REVIEW | SERIES # 6 OF 11

APPROVED BY CHIEF ENGINEER: DATE: 12/10/2025

NO. | DATE | REVISION OR CHANGE ORDER DESCRIPTION | BY

STATE OF LOUISIANA DEPARTMENT OF TRANSPORTATION AND DEVELOPMENT

ALTERNATE BENTS CAST-IN-PLACE CONCRETE BENTS

28'-0" CLEAR ROADWAY
75° CROSSING TWO WAY TANGENT

PSS-75-28-20SL

DOTD LOUISIANA DEPARTMENT OF TRANSPORTATION & DEVELOPMENT

STANDARD PLAN

INFORMATIONAL FOR USE

11/24/2025 15:5
IP_PWP:d1246418\SS7528altbent2(LRFD).dgn

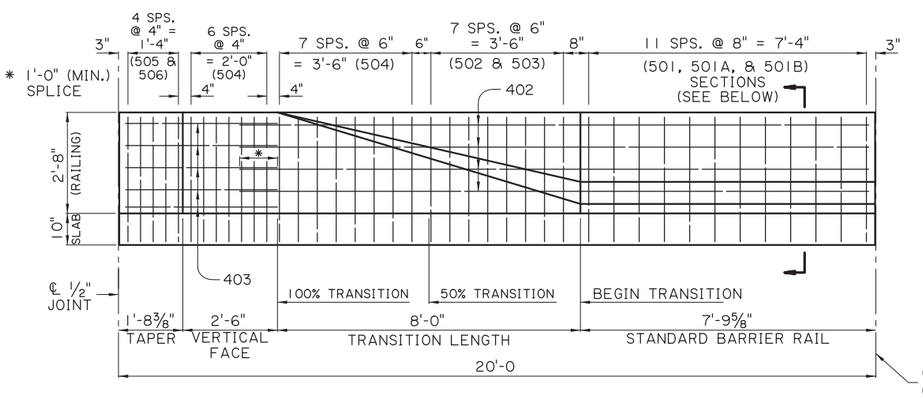

BARRIER RAILING TRANSITION ELEVATION
(SHOWING BARRIER RAILING AT END OF BRIDGE)
SCALE: 1/2" = 1'-0"

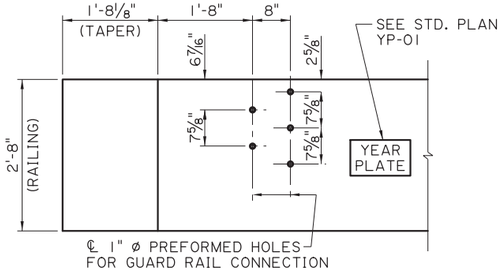

GUARD RAIL CONNECTION DETAIL
CONFORM TO GUARD RAIL STANDARD PLANS
SCALE : 3/4" = 1'-0"

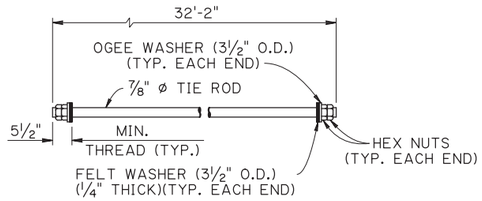

NOTE:

THE NUTS & WASHERS FOR THE TIE ROD SHALL BE ZINC COATED AND THE EXPOSED ENDS TO THE TIE RODS SHALL BE PAINTED WITH AN APPROVED COATING. AS A FINAL OPERATION THE CONTRACTOR SHALL BE REQUIRED TO TORQUE THE INSTALLED TIE ROD TO 170 FT. LBS. JUST PRIOR TO PAINTING. ALL EXPOSED ENDS SHALL BE PAINTED WITH AN APPROVED COATING AFTER STRESSING. ONE (1) MECHANICAL SPLICE MAY BE USED IN SPLICING THE 7/8" ø TIE ROD. THE SPLICE SHALL DEVELOP AT LEAST 125% OF THE SPECIFIED YIELD STRENGTH OF THE TIE ROD IN TENSION. THE MECHANICAL SPLICE SHALL BE ZINC COATED OR PAINTED WITH AN APPROVED COLD GALVANIZING REPAIR COMPOUND FROM AML PRIOR TO PLACING THE TIE ROD IN THE STRUCTURE.

DETAILS OF TIE ROD

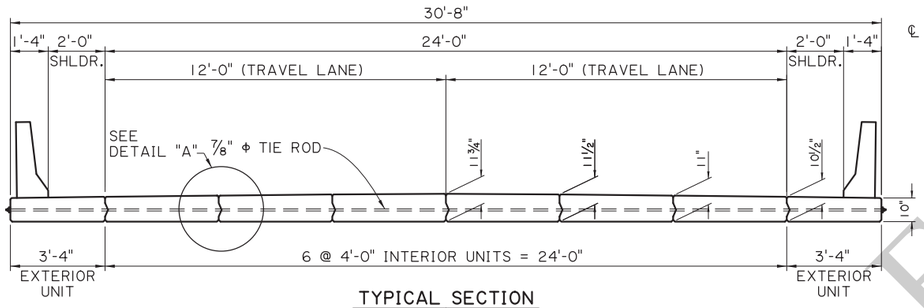

TYPICAL SECTION
SCALE: 3/8" = 1'-0"

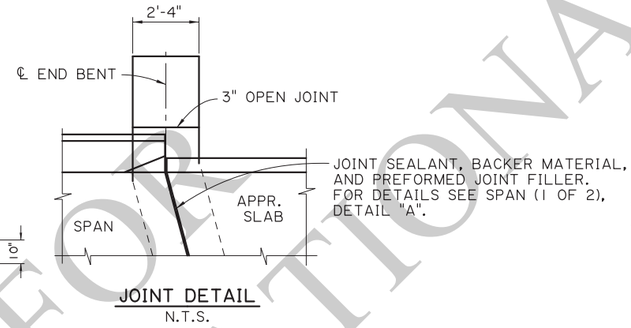

JOINT DETAIL
N.T.S.

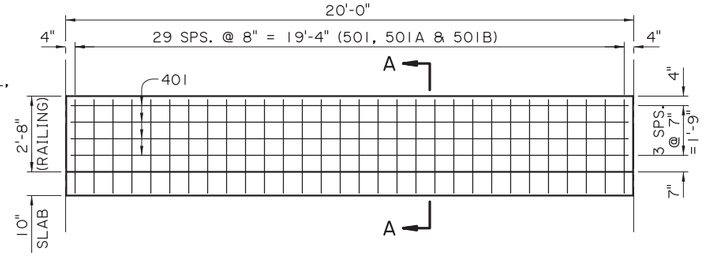

STANDARD BARRIER RAILING ELEVATION
(SHOWING BARRIER RAILING ALONG BRIDGE END)
SCALE : 3/8" = 1'-0"

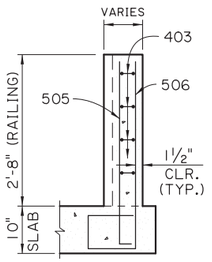

TAPER

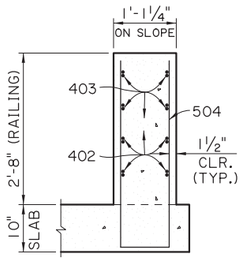

100 % TRANSITION

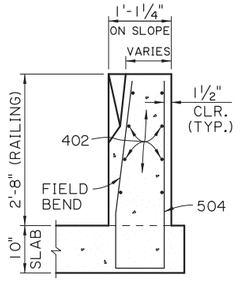

FROM 50 % TO 100% TRANSITION

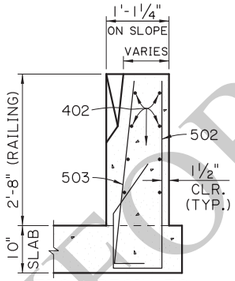

FROM BEGIN TO 50 % TRANSITION

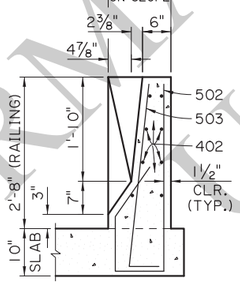

BEGIN TRANSITION

BARRIER RAILING TRANSITION SECTIONS
SCALE: 3/4" = 1'-0"

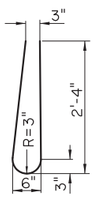

BARS 501
(4'-10" LONG)

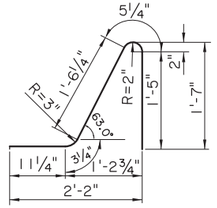

BARS 501A
(4'-7" LONG)

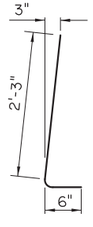

BARS 501B
(2 1/2" ø PIN)
(2'-9" LONG)

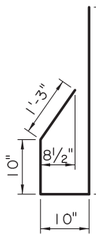

502
(2 1/2" ø PIN)
(6'-2" LONG)

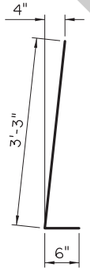

503
(2 1/2" ø PIN)
(3'-9" LONG)

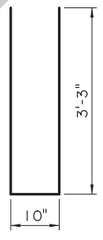

504
(2 1/2" ø PIN)
(7'-4" LONG)

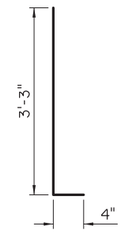

505
(2 1/2" ø PIN)
(3'-7" LONG)

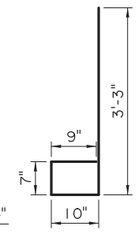

506
(2 1/2" ø PIN)
(5'-5" LONG)

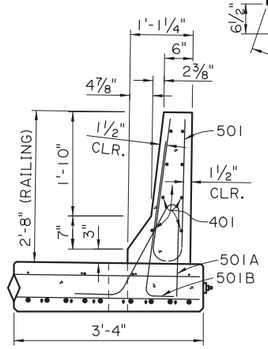

SECTION A-A
SCALE : 3/4" = 1'-0"

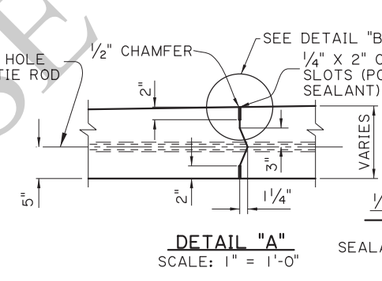

DETAIL "A"
SCALE: 1" = 1'-0"

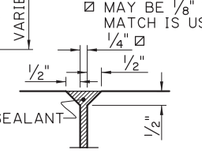

DETAIL "B"
SCALE: 1" = 1'-0"

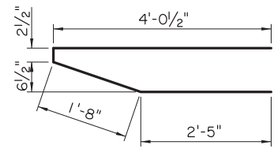

403
(2" ø PIN)
(8'-4" LONG)

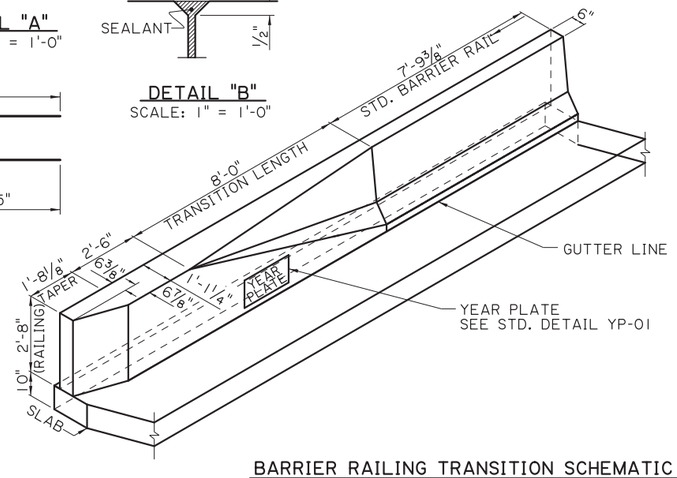

BARRIER RAILING TRANSITION SCHEMATIC
SCALE : 3/8" = 1'-0"

FOR INFORMATIONAL USE

SHEET NUMBER		
PARISH	CONTROL SECTION	STATE PROJECT
DESIGN B. DELATTE / CHECK J. NAKHLEH	DETAIL D. HYMEL / CHECK J. NAKHLEH	REVIEW / SERIES # 7 OF 11

APPROVED BY CHIEF ENGINEER: DATE: 12/10/2025

NO.	DATE	REVISION OR CHANGE ORDER DESCRIPTION	BY

ALTERNATE SPAN (1 OF 4)
20'-0" PRECAST CONC. SLAB SPAN

28'-0" CLEAR ROADWAY
75° CROSSING TWO WAY TANGENT

PSS-75-28-20SL

DOTD LOUISIANA DEPARTMENT OF TRANSPORTATION & DEVELOPMENT

STANDARD PLAN

11/18/2025 13:4

IP_PWP:d1246418\SS7528altspan1(LRFD).dgn

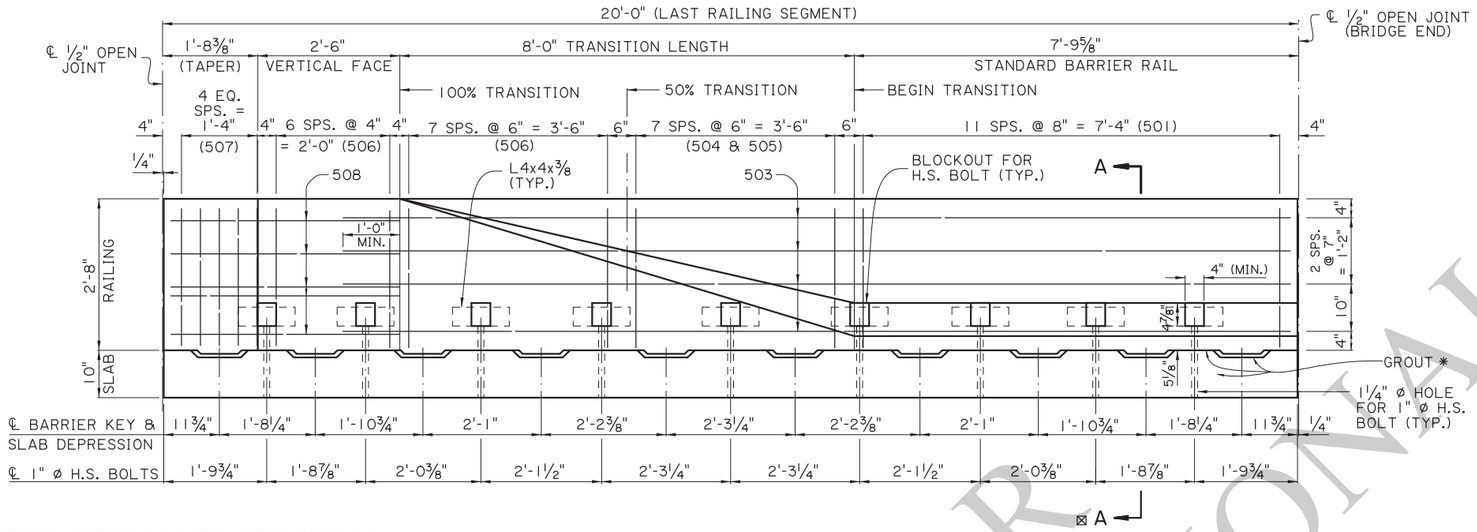

⊠ FOR SECTION A-A & TRANSITION SECTIONS SEE ALTERNATE SPAN (3 OF4)

PRECAST BARRIER RAILING TRANSITION ELEVATION

(SHOWING BARRIER RAILING AT END OF BRIDGE)
SCALE: ¾" = 1'-0"

* PLACE OR INJECT NON-SHRINK GROUT AS REQUIRED IN BETWEEN SLAB DEPRESSIONS TO FILL ALL VOIDS AND GAPS FOR FULL EVEN BEARING OF THE BARRIER ON THE SLAB. SEE NOTE 3, SHEET 9 OF 11.

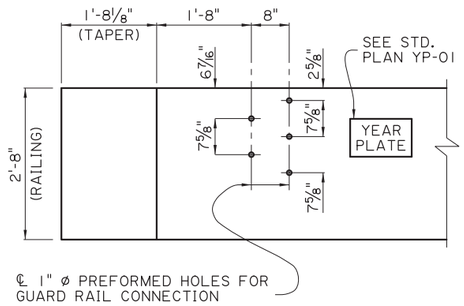

GUARD RAIL CONNECTION DETAIL

CONFORM TO GUARD RAIL STANDARD PLANS
SCALE: ¾" = 1'-0"

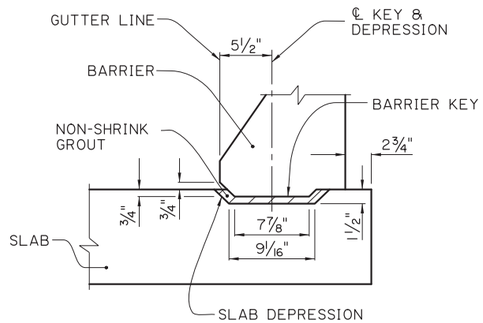

ELEVATION

SCALE: 1½" = 1'-0"

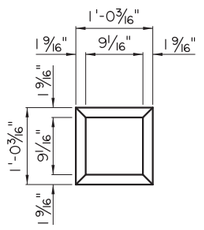

PLAN-DEPRESSION

SCALE: 1" = 1'-0"

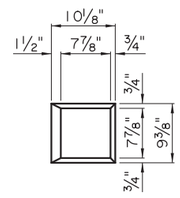

PLAN-KEY

SCALE: 1" = 1'-0"

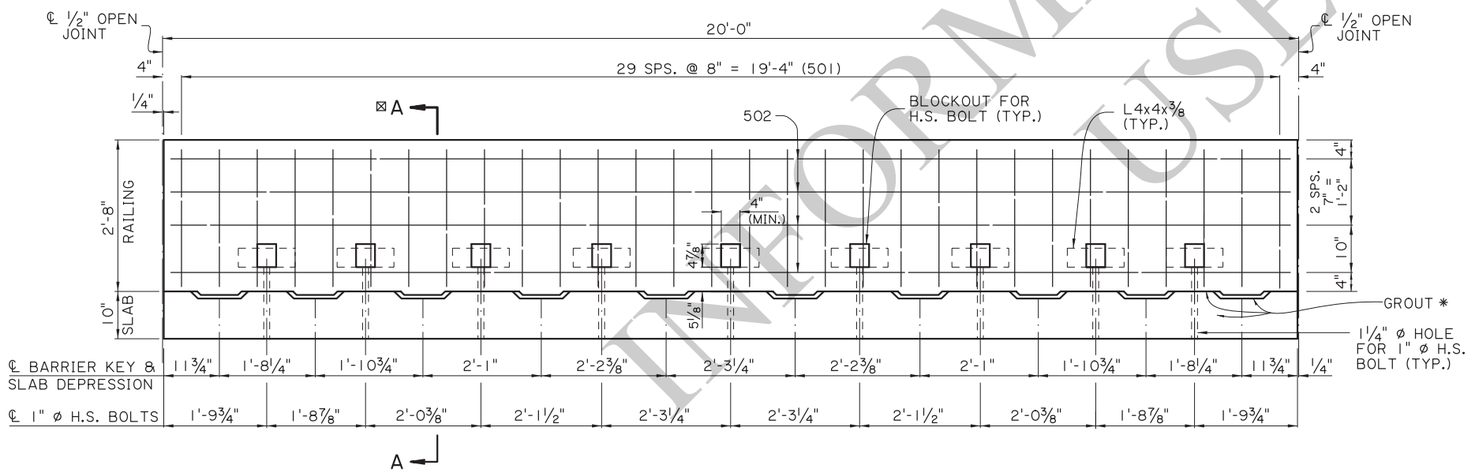

STANDARD PRECAST BARRIER RAILING ELEVATION

(SHOWING BARRIER RAILING ALONG BRIDGE SLAB)
SCALE: ¾" = 1'-0"

BARRIER KEY AND PANEL DEPRESSION DETAILS

FOR INFORMATIONAL USE

SHEET NUMBER

PARISH | CONTROL SECTION | STATE PROJECT

DESIGN B. DELATTE | CHECK J. NAKHLEH | DETAIL D. HYMEL | CHECK J. NAKHLEH | REVIEW | SERIES # 8 OF 11

APPROVED BY CHIEF ENGINEER: DATE: 12/10/2025

NO.	DATE	REVISION OR CHANGE ORDER DESCRIPTION	BY

STATE OF LOUISIANA

ALTERNATE SPAN (2 OF 4)
20'-0" PRECAST CONC. BARRIER
28'-0" CLEAR ROADWAY
75° CROSSING TWO WAY TANGENT

PSS-75-28-20SL

DOTD LOUISIANA DEPARTMENT OF TRANSPORTATION & DEVELOPMENT

STANDARD PLAN

11/18/2025 13:5

IP_PWP:d1246418\SS7528altspan2(LRFD).dgn

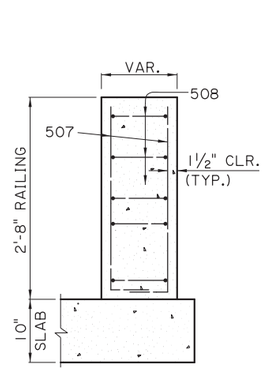

TAPER

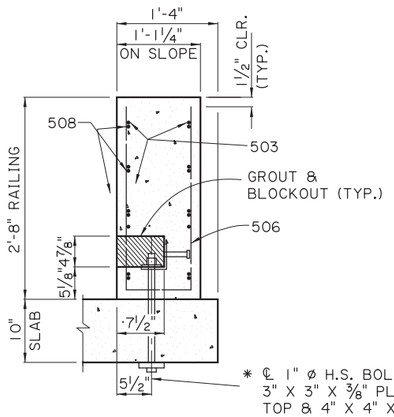

100% TRANSITION

* ℄ 1" ø H.S. BOLT, AND 3" X 3" X ⅜" PLATE WASHER TOP & 4" X 4" X ⅞" PLATE WASHER BOTTOM, AND ONE HEAVY HEX NUT (TYP.).

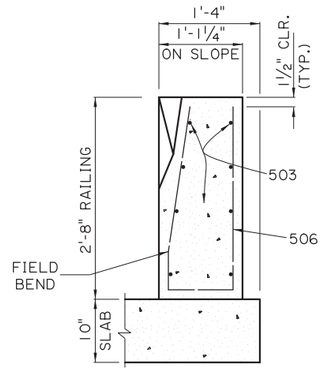

50% TRANSITION

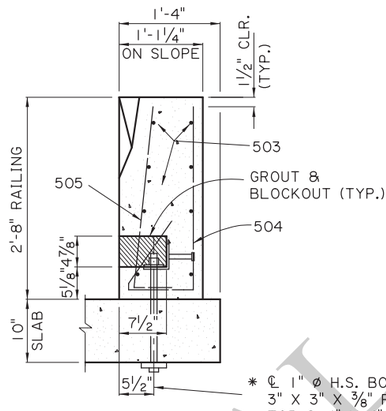

50% TRANSITION

* ℄ 1" ø H.S. BOLT, AND 3" X 3" X ⅜" PLATE WASHER TOP & 4" X 4" X ⅞" PLATE WASHER BOTTOM, AND ONE HEAVY HEX NUT (TYP.).

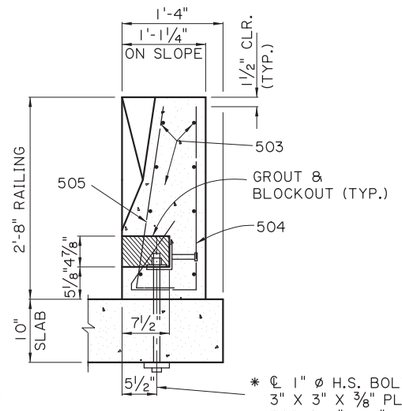

BEGIN TRANSITION

* ℄ 1" ø H.S. BOLT, AND 3" X 3" X ⅜" PLATE WASHER TOP & 4" X 4" X ⅞" PLATE WASHER BOTTOM, AND ONE HEAVY HEX NUT (TYP.).

BARRIER RAILING TRANSITION SECTIONS

SCALE: 1" = 1'-0"

* 1" ø THREADED STUD OF EQUAL STRENGTH, WITH 2 NUTS & 2 WASHERS, MAY BE USED IN LIEU OF H.S. BOLTS.

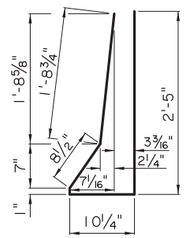

501
(2½" ø PIN)

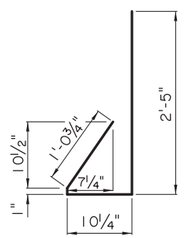

504
(2½" ø PIN)

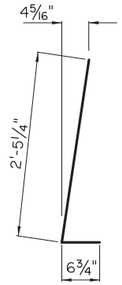

505
(2½" ø PIN)

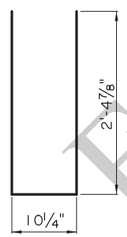

506
(2½" ø PIN)

507
(2½" ø PIN)

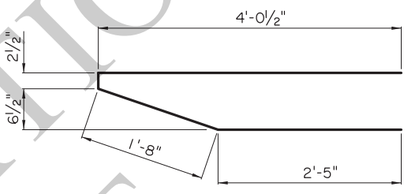

508
(2½" ø PIN)

NOTES:

1) ALL BARRIER RAIL SURFACES ARE TO RECEIVE A CLASS 3 SPECIAL FINISH.

2) ALL SURFACES OF THE BLOCKOUTS EXCEPT THE BOTTOM MAY BE TAPERED AND ALL CORNERS MAY BE ROUNDED TO A RADIUS TO ALLOW FOR EASY REMOVAL OF PLUGS OR FORMS. AFTER PLACING AND TIGHTENING THE ANCHOR BOLTS, THE BLOCKOUTS SHALL BE FILLED WITH AN APPROVED NON-SHRINK GROUT FROM AML AND TROWELED TO THE REQUIRED FINISH AND TO THE SATISFACTION OF THE ENGINEER.

3) AFTER BARRIER IS PLACED AND ALIGNED, ALL GAPS UNDER BARRIER AND TOP OF SLAB SHALL BE FILLED WITH NON-SHRINK GROUT FROM AML AND ALLOWED TO SET PRIOR TO TIGHTENING OF BOLTS. IT IS IMPORTANT TO FILL ALL VOIDS AND GAPS UNDER THE BARRIER TO ENSURE EVEN BEARING ON DECK WHEN THE ANCHOR BOLTS ARE LOADED.

4) ALL 1" ø BOLTS SHALL BE HIGH STRENGTH A325 OR APPROVED EQUAL. BOLT, NUT & WASHER TO BE GALVANIZED AS PER ASTM A-153. BOLTS SHALL BE TENSIONED TO 36 KIPS, OR APPROXIMATELY 540 FOOT-LB. OF TORQUE (LUBRICATED CONNECTION).

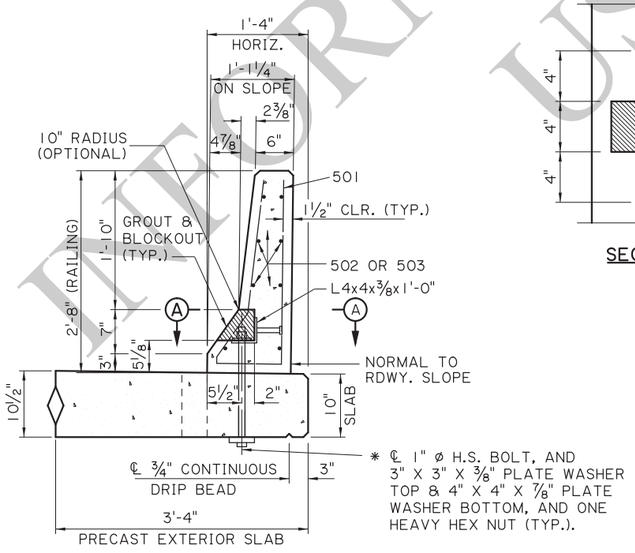

* ℄ 1" ø H.S. BOLT, AND 3" X 3" X ⅜" PLATE WASHER TOP & 4" X 4" X ⅞" PLATE WASHER BOTTOM, AND ONE HEAVY HEX NUT (TYP.).

SECTION A-A
SCALE: 1" = 1'-0"

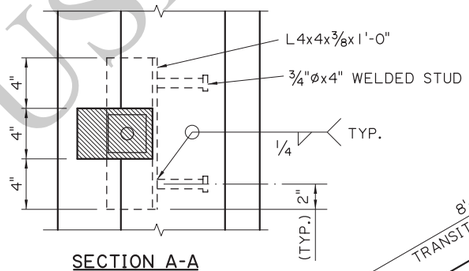

SECTION A-A

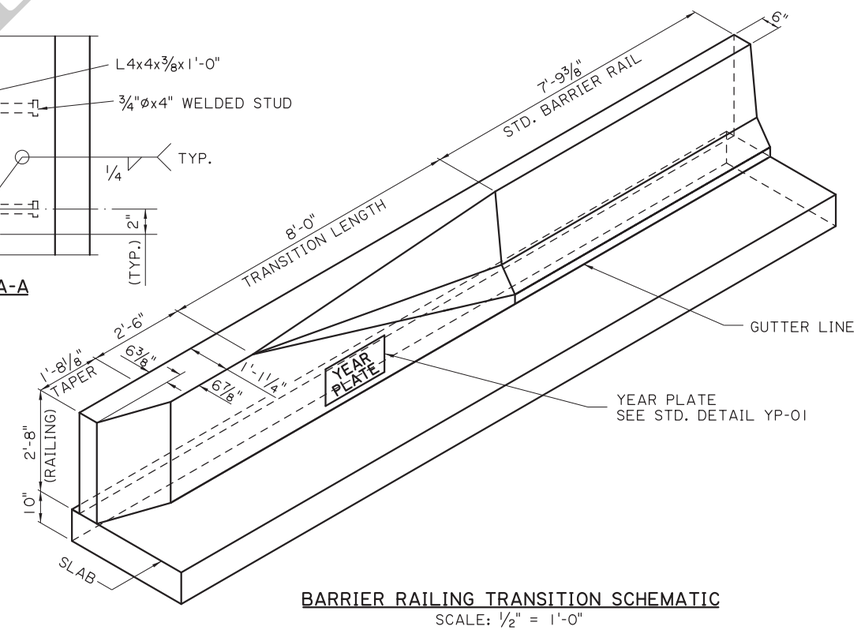

BARRIER RAILING TRANSITION SCHEMATIC
SCALE: ½" = 1'-0"

FOR INFORMATIONAL USE

SHEET NUMBER

PARISH | CONTROL SECTION | STATE PROJECT

DESIGN B. DELATTE | CHECK J. NAKHLEH | DETAIL D. HYMEL | CHECK J. NAKHLEH | REVIEW | SERIES # 9 OF 11

APPROVED BY CHIEF ENGINEER: DATE: 12/10/2025

NO.	DATE	REVISION OR CHANGE ORDER DESCRIPTION	BY

STATE OF LOUISIANA

ALTERNATE SPAN (3 OF 4)
20'-0" PRECAST CONC. BARRIER

28'-0" CLEAR ROADWAY
75° CROSSING TWO WAY TANGENT

PSS-75-28-20SL

DOTD
LOUISIANA DEPARTMENT OF TRANSPORTATION & DEVELOPMENT

STANDARD PLAN

11/18/2025 13:5:

IP_PWP:d1246418\SS7528altspan3(LRFD).dgn

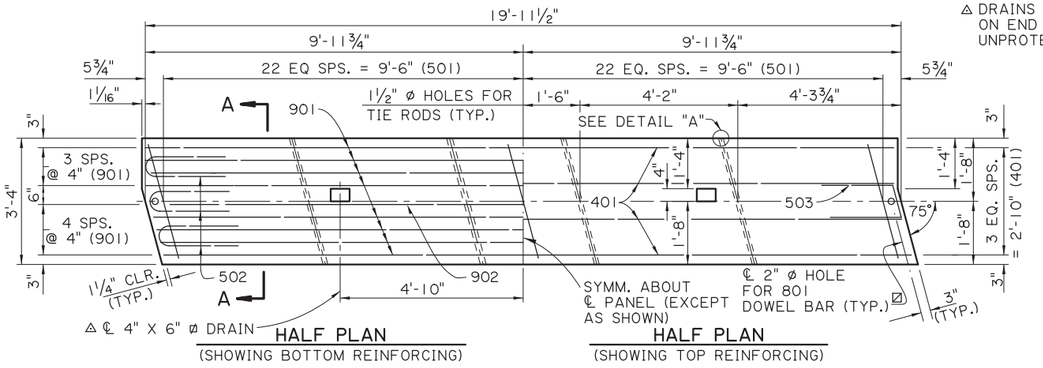

EXTERIOR UNIT
SCALE ½" = 1'-0"

△ DRAINS ARE NOT REQUIRED ON END SPANS OVER UNPROTECTED SLOPES.

☐ HOLES ARE OPTIONAL AT EXPANSION ENDS.

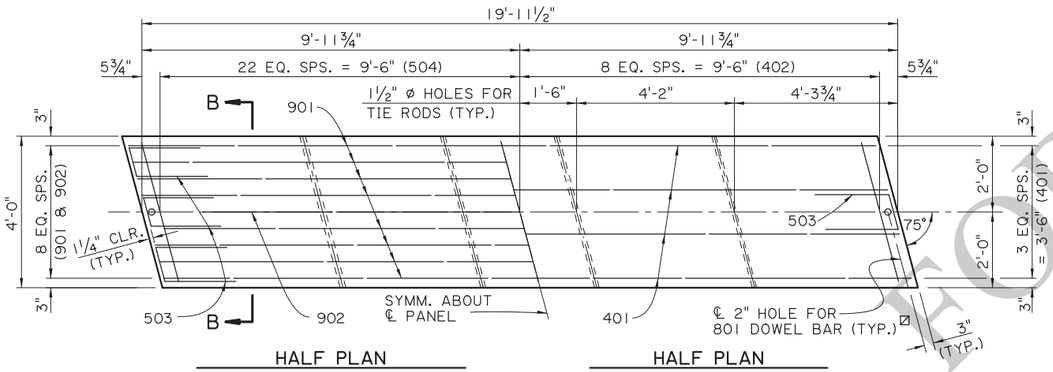

INTERIOR UNIT
SCALE ½" = 1'-0"

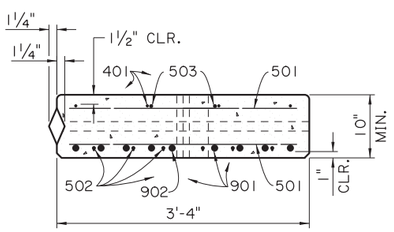

SECTION A-A
EXTERIOR UNIT
SCALE 1" = 1'-0"

NOTE:
FOR EACH SPAN, ONE EXTERIOR UNIT WILL HAVE A TONGUE AND ONE WILL HAVE A GROOVE.

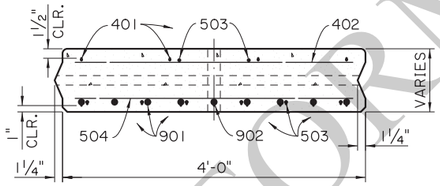

SECTION B-B
INTERIOR UNIT
SCALE 1" = 1'-0"

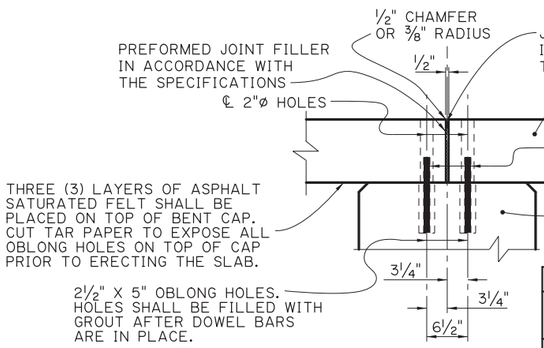

TYPICAL JOINT DETAIL
SCALE : 1" = 1'-0"

NOTES:
FOR ADDITIONAL JOINT DETAILS SEE SHEET 2 OF 11.
FOR ½" CHAMFER DETAIL, SEE DETAIL "B", ALTERNATE SPAN 1 OF 4.

AS-DESIGNED RATING		
VEHICLE	RATING FACTOR	NOTES
HL-93 (INV)	1.384	——
HL-93 (OPR)	1.794	——
LADV-11 (INV)	1.065	MAGNIFICATION FACTOR = 1.3

ALTERNATE SPAN NOTES:

DESIGN SPECIFICATIONS: AASHTO LRFD BRIDGE DESIGN SPECIFICATIONS, 4th EDITION, WITH 2008 & 2009 INTERIMS.

DESIGN LOAD: THE BRIDGE DECK IS DESIGNED FOR A FUTURE WEARING COURSE OF 19 PSF. THE LIVE LOAD IS HL-93, AND LADV-11 (LOUISIANA DESIGN VEHICLE LIVE LOAD 2011).

STRUCTURAL CONCRETE: ALL CONCRETE SHALL BE CLASS P1. THE BRIDGE RAIL CONCRETE SHALL BE CLASS A1 IF RAIL IS CAST IN PLACE. STEEL SIDE FORMS AND STEEL OR CONCRETE BOTTOM FORMS SHALL BE USED FOR PRECAST COMPONENTS. EXPOSED EDGES SHALL HAVE A ¾" CHAMFER, UNLESS OTHERWISE NOTED. ALL SURFACES SHALL RECEIVE A CLASS 1 ORDINARY FINISH UPON REMOVAL OF THE FORMS. THE FINAL FINISH SHALL BE A TINE FINISH IN ACCORDANCE WITH THE SPECIFICATIONS.

REINFORCING STEEL: ALL REINFORCING STEEL SHALL BE GRADE 60. DIMENSIONS RELATING TO FABRICATION ARE OUT TO OUT OF BARS, UNLESS SPECIFIED OTHERWISE. DIMENSIONS RELATING TO SPACING ARE TO BAR CENTERS, UNLESS SPECIFIED OTHERWISE. ALL REINFORCING BARS SHALL BE PLACED TO PROVIDE A MINIMUMUM COVER OF 1" FROM THE DRAIN HOLES. REINFORCING STEEL MAY BE TACK WELDED FOR A DISTANCE OF NOT MORE THAN 4'-0" FROM EACH END OF UNIT. NO OTHER WELDING SHALL BE PERMITTED.

MISCELLANEOUS STEEL: HIGH STRENGTH BOLTS SHALL CONFORM TO ASTM DESIGNATION A-325. PRESTRESSING STRANDS SHALL CONFORM TO ASTM DESIGNATION A-416, GRADE 270. PLATES, TIE RODS, AND DRIFT BOLTS SHALL CONFORM TO ASTM DESIGNATION A709, GRADE 36. STEEL SPECIFIED TO BE ZINC COATED SHALL BE IN CONFORMANCE WITH ASTM DESIGNATION A-123.

GROUT: THE GROUT SHALL BE AN APPROVED FLOWABLE NON-SHRINK GROUT LISTED ON AML. THE GROUT SHALL BE TESTED FOR ACCEPTANCE PRIOR TO USAGE. THE GROUT SHALL ATTAIN A MINIMUM COMPRESSIVE STRENGTH OF 3500 PSI PRIOR TO LOADING SLABS. SURFACES SHALL BE THOROUGHLY SATURATED WITH WATER BY FLOODING THE HOLES FOR APPROXIMATELY FIVE (5) MINUTES IMMEDIATELY BEFORE THE GROUT IS PLACED. ONLY POTABLE WATER SHALL BE USED FOR SATURATION AND MIXING PURPOSES.

PATCHING MATERIAL: THE PATCHING MATERIAL SHALL BE AN APPROVED PATCHING MATERIAL FOR PRECAST OR PRESTREESED CONCRETE PRODUCTS LISTED ON AML. SURFACE PREPARATION, MIXING AND PLACMENT SHALL BE IN ACCORDANCE WITH THE MANUFACTURERS' RECOMMENDATIONS. ONLY POTABLE WATER SHALL BE USED FOR SATURATION AND MIXING PURPOSES.

PRECAST UNITS: THE PLANS FOR AN ONGOING OPERATION OF FABRICATION FACILITIES SHALL BE APPROVED BY THE DEPARTMENT. EACH UNIT SHALL HAVE "LIVE LOAD HL-93 AND LADV-11", THE FABRICATOR'S MARK, AND UNIQUE NUMBER, MEETING THE APPROVAL OF THE ENGINEER STAMPED OR INSCRIBED IN THE PLASTIC CONCRETE. PRECAST UNITS MAY BE CAST WITH OR WITHOUT CAMBER. IF CAMBER IS PROVIDED IT SHALL NOT EXCEED ¼" AT THE CENTERLINE OF SPAN. ALL UNITS SHALL BE HELD AT THE PLANT FOR A MINIMUM OF TEN(10) DAYS AFTER CASTING. THE CONCRETE SHALL REACH A MINIMUM STRENGTH OF 3,000 PSI BEFORE HANDLING IS PERMITTED. THE LIFTING INSERTS SHALL BE 1", TYPE S INSERTS AS MANUFACTURED BY DAYTON-SUPERIOR CORPORATION OR AN APPROVED EQUAL. EACH INSERT SHALL HAVE A MINIMUM LOAD CAPACITY OF 10,000 POUNDS . FOUR(4) INSERTS WITH 1" ø X 5" LONG COIL BOLTS SHALL BE PLACED IN THE TOP OF THE UNIT AND LOCATED 1'-3" FROM ITS ENDS AND 1'-0" FROM ITS EDGES. INSERT HOLES SHALL BE GROUT FILLED AFTER PLACEMENT OF UNIT. AT THE CONTRACTOR'S OPTION A SLING OF SUFFICIENT CAPACITY MAY BE USED FOR LIFTING, PROVIDED THE SAME PICKUP LOCATION FROM THE ENDS ARE USED. FABRICATION TOLERANCES SHALL BE AS FOLLOWS:

UNIT DEPTH	± 3/16"
UNIT LENGTH	+ 1/8" AND -1/2"
OVERALL SPAN WIDTH	± 2"

ALL PRECAST UNITS IN EACH BRIDGE SPAN SHALL BE MATCH CAST IN THE SAME CASTING BED TO ENSURE A PROPER FIT DURING INSTALLATION.

GUARDRAIL: CONFORM TO PROJECT PLANS AND GUARD RAIL STANDARD PLANS.

PAYMENT: ALL WORK WILL BE PAID FOR UNDER THE DESIGNATED BRIDGE SUPERSTRUCTURE AND SUBSTRUCTURE PAY ITEM AND IN ACCORDANCE WITH THE SPECIFICATIONS.

ESTIMATED QUANTITIES (ONE EXTERIOR UNIT)				
BAR	NO.	UNIT LENGTH	TOTAL LENGTH	LOCATION
901	8	19'-8"	157'-4"	LONGIT. BOT. OF SLAB
902	1	18'-11"	18'-11"	LONGIT. BOT. OF SLAB
TOTAL NO. 9 BARS = 176'-3" = 599 LBS.				
801	1	1'-0"	1'-0"	DOWELS
TOTAL NO. 8 BARS = 1'-0" = 3 LBS.				
501	90	3'-1"	277'-6"	TRANS. TOP & BOT. OF SLAB
502	6	4'-6"	27'-0"	BOT. END OF SLAB
503	2	4'-9"	9'-6"	TOP END OF SLAB
TOTAL NO. 5 BARS = 313'-11" = 327 LBS.				
401	4	19'-8"	78'-8"	LONGIT. TOP OF SLAB
TOTAL NO. 4 BARS = 78'-8" = 53 LBS.				
DEFORMED REINFORCING STEEL = 982 LBS.				
CLASS P1 CONCRETE = 2.05 CU. YDS.				
CONCRETE RAILING (PER SPAN) = 40.00 LIN. FT.				

ESTIMATED QUANTITIES (ONE INTERIOR UNIT)				
BAR	NO.	UNIT LENGTH	TOTAL LENGTH	LOCATION
901	8	19'-8"	157'-4"	LONGIT. BOT. OF SLAB
902	1	18'-11"	18'-11"	LONGIT. BOT. OF SLAB
TOTAL NO. 9 BARS = 176'-3" = 599 LBS.				
801	1	1'-0"	1'-0"	DOWELS
TOTAL NO. 8 BARS = 1'-0" = 3 LBS.				
503	8	4'-9"	38'-0"	TOP & BOT. END OF SLAB
504	44	3'-9"	146'-3"	TRANS. BOT. OF SLAB
TOTAL NO. 5 BARS = 203'-0" = 212 LBS.				
401	4	19'-8"	78'-8"	LONGIT. TOP OF SLAB
402	17	3'-9"	63'-9"	TRANS. TOP OF SLAB
TOTAL NO. 4 BARS = 142'-5" = 95 LBS.				
DEFORMED REINFORCING STEEL = 909 LBS.				
CLASS P1 CONCRETE = 2.46 CU. YDS.				

⊙ BASED ON A 10" SLAB THICKNESS

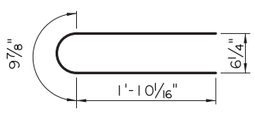

502
5 " ø PIN

503
2½" ø PIN

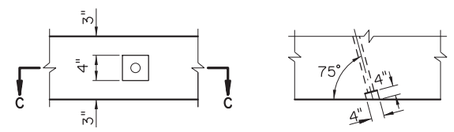

END VIEW

SECTION C-C

DETAIL "A"
TYP. EXTERIOUR EDGE ONLY
SCALE 1" = 1'-0"

INFORMATIONAL

SHEET NUMBER

PARISH | CONTROL SECTION | STATE PROJECT

DESIGN J. NAKHLEH | CHECK B. DELATTE | DETAIL D. HYMEL | CHECK J. NAKHLEH | REVIEW | SERIES # 10 OF 11

APPROVED BY CHIEF ENGINEER: DATE: 12/10/2025

NO. | DATE | REVISION OR CHANGE ORDER DESCRIPTION | BY

STATE OF LOUISIANA DEPARTMENT OF TRANSPORTATION AND DEVELOPMENT

ALTERNATE SPAN (4 OF 4)
20'-0" PRECAST CONC. SLAB UNIT
28'-0" CLEAR ROADWAY
75° CROSSING TWO WAY TANGENT

PSS-75-28-20SL

DOTD
LOUISIANA DEPARTMENT OF TRANSPORTATION & DEVELOPMENT

STANDARD PLAN

11/19/2025 14:51

IP_PWP:d1246418\SS7528altspan4(LRFD).dgn

11/24/2025 17:0

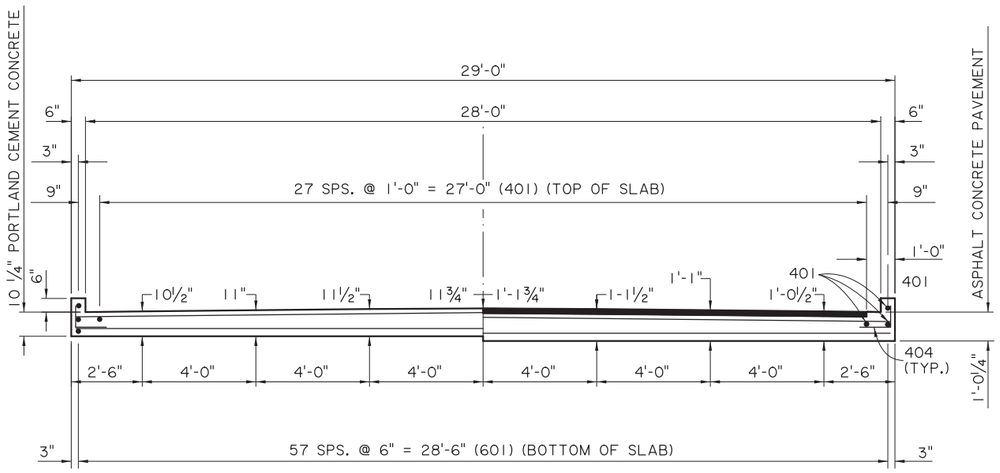

(HALF SECTION) (PORTLAND CEMENT CONCRETE)

(HALF SECTION) (ASPHALT CONCRETE PAVEMENT)

SECTION A-A

SCALE: 3/8" = 1'-0"

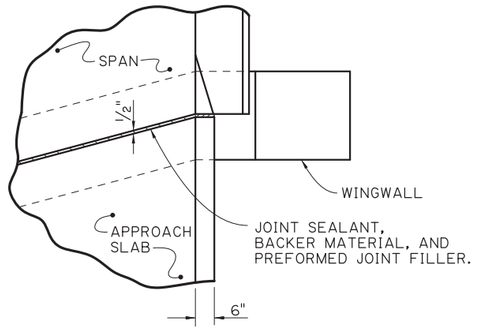

JOINT DETAIL

N.T.S.

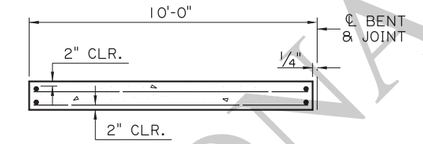

(FOR PORTLAND CEMENT CONCRETE ROADWAY PAVEMENT)

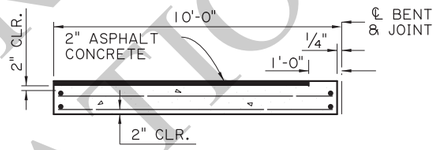

(FOR ASPHALT CONCRETE ROADWAY PAVEMENT)

SECTION ALONG ℄ ROADWAY

SCALE: 1/4" = 1'-0"

ESTIMATED QUANTITIES (ONE SLAB)				
BAR	NO.	UNIT LENGTH	TOTAL LENGTH	LOCATION
801	8	1'-0"	8'-0"	DOWELS
TOTAL NO. 8 BARS = 8'-0" = 21 LBS.				
601	58	9'-7"	555'-10"	LONGIT. BOT. OF SLAB
602	2	29'-6"	59'-0"	TRANSV. BOT. OF SLAB
603	18	29'-8"	534'-0"	TRANSV. BOT. OF SLAB
TOTAL NO. 6 BARS = 1,148'-10" = 1,726 LBS.				
401	32	9'-7"	306'-8"	LONGIT. TOP OF SLAB & CURB
402	2	29'-6"	59'-0"	TRANSV. TOP OF SLAB
403	9	29'-8"	267'-0"	TRANSV. TOP OF SLAB
404	14	1'-10"	25'-8"	DOWELS IN CURB
TOTAL NO. 4 BARS = 658'-4" = 440 LBS.				
⊙	TOTAL DEFORMED REINFORCING STEEL = 2,187 LBS.			
	CONCRETE APPROACH SLAB = 32.22 SQ. YDS.			
⊙ ⊠	ASPHALT CONCRETE = 3.0 TONS			
⊙ ⊠	SAW CUT & SEAL = 28 LIN. FT.			

⊙ TO BE PAID FOR UNDER ITEM CONCRETE APPROACH SLABS.
⊠ REQUIRED WHEN APPROACH SLAB IS ADJACENT TO ASPHALT CONCRETE PAVEMENT.

APPROACH SLAB NOTES:

DESIGN SPECIFICATIONS: AASHTO LRFD BRIDGE DESIGN SPECIFICATIONS 4th EDITION, WITH 2008 & 2009 INTERIMS.
STRUCTURAL CONCRETE: ALL CONCRETE SHALL BE CLASS A1. EXPOSED EDGES SHALL HAVE A 3/4" CHAMFER, UNLESS SPECIFIED OTHERWISE.
ASPHALT CONCRETE: TO BE THE SAME TYPE AS THE ASPHALT CONCRETE USED FOR THE APPROACH ROADWAY PAVEMENT OR OVERLAY.
REINFORCING STEEL: ALL REINFORCING STEEL SHALL BE GRADE 60. DIMENSIONS RELATING TO THE FABRICATION ARE OUT-TO-OUT OF BARS, UNLESS SPECIFIED OTHERWISE. DIMENSIONS RELATING TO SPACING ARE TO BAR CENTERS.
BEDDING MATERIAL: FOR DETAILS OF BEDDING MATERIAL AND UNDERDRAINS SEE APPROACH SLAB STANDARD DETAIL.
SAWING & SEALING: THE ASPHALT CONCRETE SHALL BE SAW CUT AT THE END OF THE CONCRETE APPROACH SLAB THE ENTIRE ROADWAY WIDTH AND SEALED WHICH WILL BE PAID FOR UNDER THE DESIGNATED ROADWAY PAY ITEM.
PAYMENT: ALL OTHER WORK WILL BE PAID FOR UNDER THE DESIGNATED BRIDGE CONCRETE APPROACH SLAB PAY ITEM AND IN ACCORDANCE WITH THE SPECIFICATIONS.

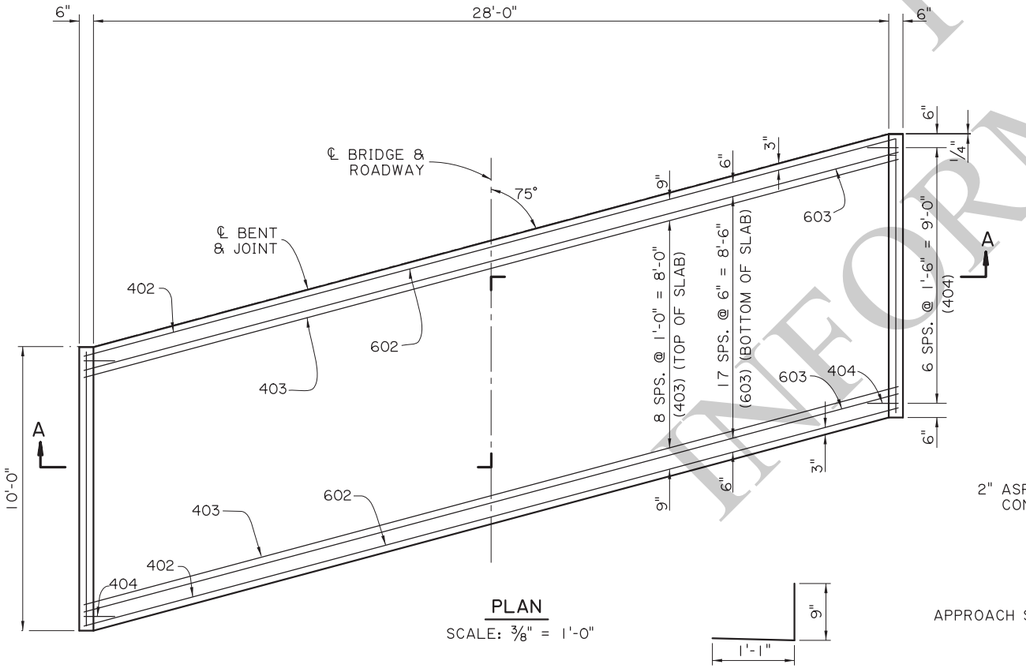

PLAN

SCALE: 3/8" = 1'-0"

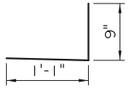

404

2" ø PIN

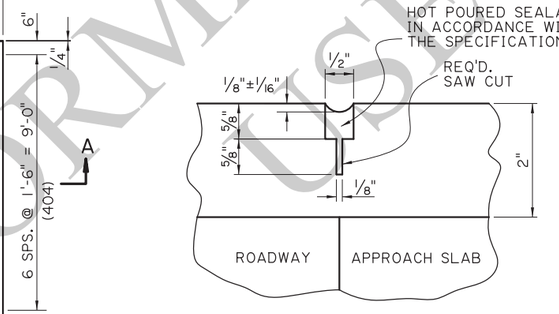

SAWING & SEALING JOINT DETAIL

N.T.S.

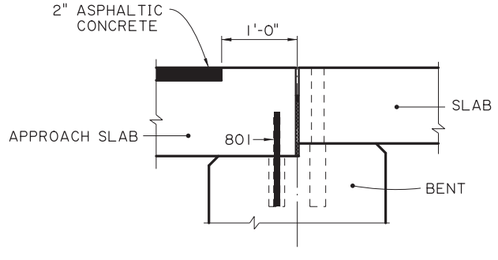

DETAIL A

SCALE: 1" = 1'-0"
(ASPHALT CONCRETE PAVEMENT OPTION)

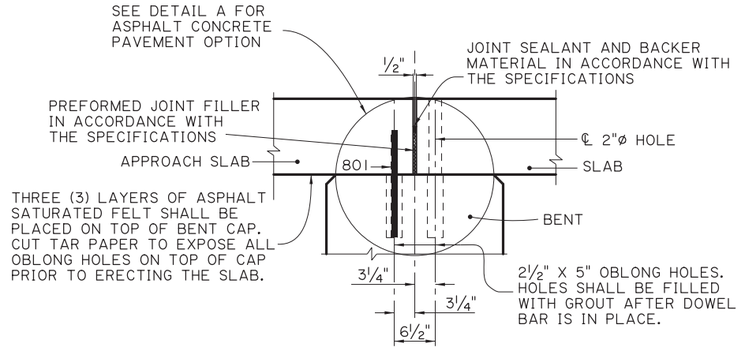

TYPICAL JOINT DETAIL

SCALE : 1" = 1'-0"

NOTE: FOR ADDITIONAL JOINT DETAILS SEE SHEET 2 OF 11.

FOR INFORMATIONAL USE

SHEET NUMBER

PARISH	CONTROL SECTION	STATE PROJECT

DESIGN	B. DELATTE	DETAIL	D. HYMEL	REVIEW	SERIES # 11 OF 11
CHECK	J. NAKHLEH	CHECK	J. NAKHLEH		

APPROVED BY CHIEF ENGINEER: DATE: 12/10/2025

NO.	DATE	REVISION OR CHANGE ORDER DESCRIPTION	BY

ALTERNATE APPROACH SLAB 10'-0" CAST-IN-PLACE

28'-0" CLEAR ROADWAY
75° CROSSING TWO WAY TANGENT

PSS-75-28-20SL

DOTD LOUISIANA DEPARTMENT OF TRANSPORTATION & DEVELOPMENT

STANDARD PLAN

IP_PWP:d1246418\SS7528altaprslab(LRFD).dgn

11/25/2025 14:11

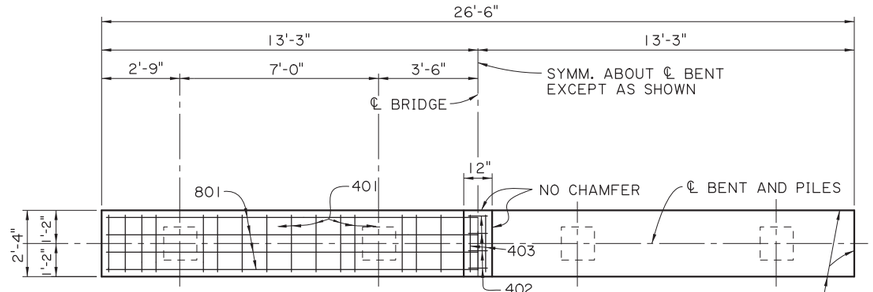

PLAN - INTERMEDIATE BENT
SCALE ⅜" = 1'-0"

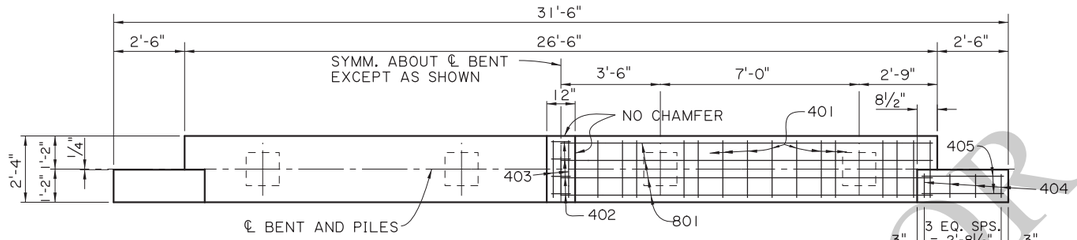

PLAN - END BENT
SCALE ⅜" = 1'-0"

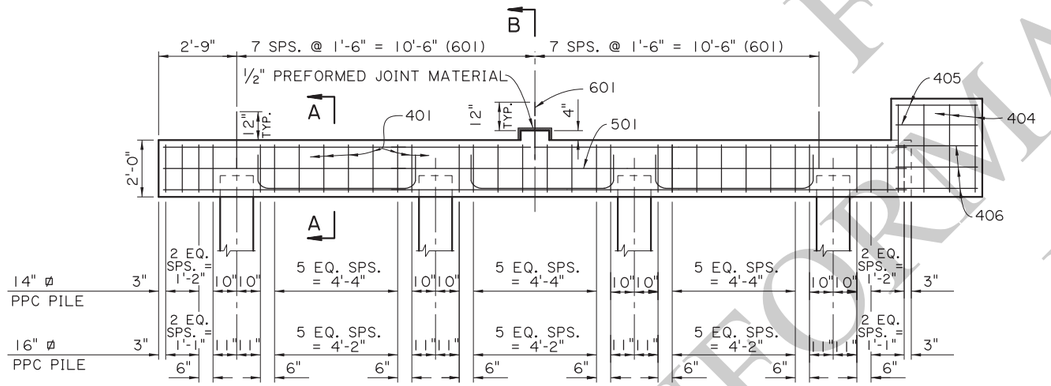

HALF ELEVATION - INTERMEDIATE BENT
SCALE ⅜" = 1'-0"

HALF ELEVATION - END BENT
SCALE ⅜" = 1'-0"

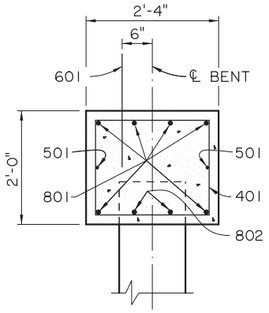

SECTION A-A
SCALE: ¾" = 1'-0"

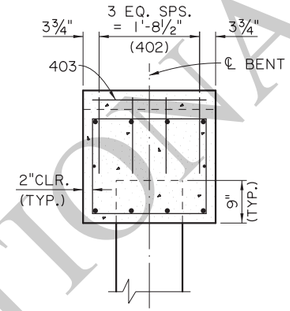

SECTION B-B
SCALE: ¾" = 1'-0"

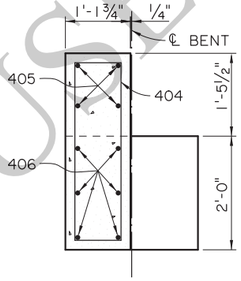

END ELEVATION
SCALE ¾" = 1'-0"

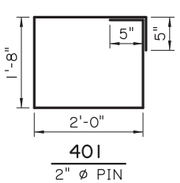

401
2" ø PIN

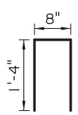

402
2" ø PIN

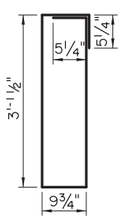

404
2" ø PIN

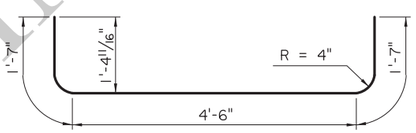

802
6" ø PIN

AS-DESIGNED RATING		
VEHICLE	RATING FACTOR	NOTES
HL-93 (INV)	1.793	——
HL-93 (OPR)	2.324	——
LADV-11 (INV)	1.379	MAGNIFICATION FACTOR = 1.3

ESTIMATED QUANTITIES (ONE INTER. BENT)				
BAR	NO.	UNIT LENGTH	TOTAL LENGTH	LOCATION
801	6	26'-2"	157'-0"	LONGIT. IN CAP
802	6	7'-8"	46'-0"	LONGIT. IN CAP BTW. PILES
TOTAL NO. 8 BARS = 203'-0" = 542 LBS.				
601	15	2'-0"	30'-0"	DOWELS
TOTAL NO. 6 BARS = 30'-0" = 45 LBS.				
501	2	26'-2"	52'-4"	LONGIT. IN CAP
TOTAL NO. 5 BARS = 52'-4" = 55 LBS.				
401	32	8'-2"	261'-4"	STIRRUPS IN CAP
402	4	3'-4"	13'-4"	STIRRUPS IN RISER
403	2	2'-0"	4'-0"	LONGIT. IN RISER
TOTAL NO. 4 BARS = 278'-8" = 186 LBS.				
* DEFORMED REINFORCING STEEL = 828 LBS.				
⊖ CLASS A1 CONCRETE = 4.41 CU. YDS.				
MAX. PILE LOAD: SERVICE DEAD LOAD = 21 TONS SERVICE LIVE LOAD = 34 TONS FACTORED TOTAL LOAD = 76 TONS				

* ADD 45 LBS. OF REINFORCING STEEL (15-601 DOWELS) WHEN TWO FIXED ENDS OCCUR ON THE SAME BENT.

ESTIMATED QUANTITIES (ONE END BENT)				
BAR	NO.	UNIT LENGTH	TOTAL LENGTH	LOCATION
801	6	26'-2"	157'-0"	LONGIT. IN CAP
802	6	7'-8"	46'-0"	LONGIT. IN CAP BTW. PILES
TOTAL NO. 8 BARS = 203'-0" = 542 LBS.				
601	15	2'-0"	30'-0"	DOWELS
TOTAL NO. 6 BARS = 30'-0" = 45 LBS.				
501	2	26'-2"	52'-4"	LONGIT. IN CAP
TOTAL NO. 5 BARS = 52'-4" = 55 LBS.				
401	32	8'-2"	261'-4"	STIRRUPS IN CAP
402	4	3'-4"	13'-4"	STIRRUPS IN RISER
403	2	2'-0"	4'-0"	LONGIT. IN RISER
404	8	8'-9"	70'-0"	STIRRUPS IN WINGWALL
405	8	2'-10"	22'-8"	LONGIT. IN WINGWALL
406	12	4'-0"	48'-0"	LONGIT. IN WINGWALL
TOTAL NO. 4 BARS = 419'-4" = 280 LBS.				
DEFORMED REINFORCING STEEL = 922 LBS.				
⊖ CLASS A1 CONCRETE = 5.23 CU. YDS.				
MAX. PILE LOAD: SERVICE DEAD LOAD = 21 TONS SERVICE LIVE LOAD = 34 TONS FACTORED TOTAL LOAD = 76 TONS				

⊖ 16" ø PPC PILES USED FOR ESTIMATING PURPOSES ONLY. (ADD 0.05 CU. YDS. OF CLASS A1 CONCRETE PER BENT WHEN 14" ø PPC PILES ARE USED.)

BENT NOTES:

DESIGN SPECIFICATIONS: AASHTO LRFD BRIDGE DESIGN SPECIFICATIONS, 4TH EDITION, WITH 2008 & 2009 INTERIMS.
DESIGN LOAD: LIVE LOAD IS HL-93, AND LADV-11 (LOUISIANA DESIGN VEHICLE LIVE LOAD 2011).
STRUCTURAL CONCRETE: ALL CONCRETE SHALL BE CLASS A1.
EXPOSED EDGES SHALL HAVE A ¾" CHAMFER UNLESS SPECIFIED OTHERWISE.
ALL EXPOSED FACES OF WINGWALLS AND ENDS OF CAPS SHALL RECEIVE A SURFACE FINISH AS PER THE SPECIFICATIONS UNLESS SPECIFIED OTHERWISE. ½" PREFORMED JOINT MATERIAL AND ASPHALT SATURATED FELT SHALL BE INCLUDED IN THE COST OF CLASS A1 CONCRETE.
REINFORCING STEEL: ALL REINFORCING STEEL SHALL BE GRADE 60.
DIMENSIONS RELATING TO FABRICATION ARE OUT TO OUT OF BARS UNLESS SPECIFIED OTHERWISE. DIMENSIONS RELATING TO SPACING ARE TO BAR CENTERS, UNLESS SPECIFIED OTHERWISE. DOWELS (601 BARS) SHALL BE PROVIDED AT ALL FIXED BEARINGS AND APPROACH SLAB BEARINGS. ALL EXPOSED ENDS OF DOWELS SHALL BE WRAPPED WITH TWO LAYERS OF 15 LB. ASPHALT SATURATED FELT. CLOSE FITTING TUBES OF COMPRESSIBLE MATERIAL NOT LESS THAN 3/16" THICK MAY BE SUBSTITUTED.
PRECAST CONCRETE PILES: CONFORM TO PILE STANDARD PLAN AND PROJECT PLANS FOR FABRICATION AND INSTALLATION. PILES WILL BE PAID FOR UNDER THE DESIGNATED PILE PAY ITEMS.
PREFORMED JOINT MATERIAL: PREFORMED JOINT MATERIAL SHALL BE IN ACCORDANCE WITH THE SPECIFICATIONS.
PAYMENT: ALL OTHER WORK WILL BE PAID FOR UNDER THE DESIGNATED BRIDGE SUPERSTRUCTURE AND SUBSTRUCTURE PAY ITEM AND IN ACCORDANCE WITH THE SPECIFICATIONS.

FOR INFORMATIONAL USE

SHEET NUMBER

PARISH	CONTROL SECTION	STATE PROJECT

DESIGN	CHECK	DETAIL	CHECK	REVIEW	SERIES # 1 OF 11
J. PAINE	J. NAKHLEH	D. HYMEL	J. NAKHLEH		

APPROVED BY CHIEF ENGINEER: DATE: 12/10/2025

NO.	DATE	REVISION OR CHANGE ORDER	BY

STATE OF LOUISIANA — DEPARTMENT OF TRANSPORTATION AND DEVELOPMENT

BENTS
REINFORCED CONCRETE PILE BENTS

24'-0" CLEAR ROADWAY
90° CROSSING TWO WAY TANGENT

PSS-90-24-20SL

DOTD — LOUISIANA DEPARTMENT OF TRANSPORTATION & DEVELOPMENT

STANDARD PLAN

IP_PWP:d1246419\SS9024bent(LRFD).dgn

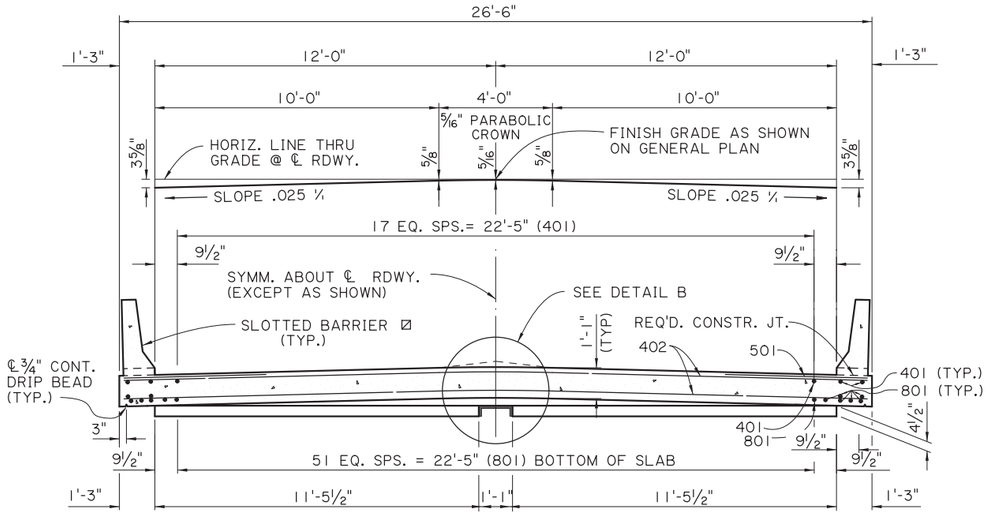

SECTION A-A
SCALE : ⅜" = 1'-0"

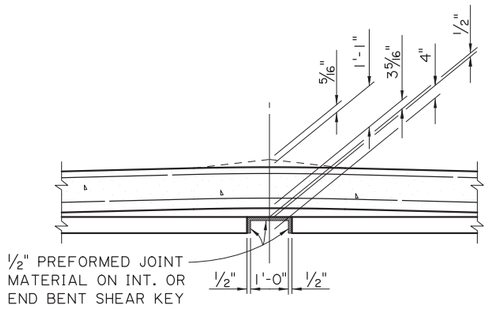

DETAIL B
SCALE : ½" = 1'-0"

ESTIMATED QUANTITIES (ONE SPAN)				
BAR	NO.	UNIT LENGTH	TOTAL LENGTH	LOCATION
801	63	19'-7"	1233'-9"	LONGIT. BOT. OF SLAB
TOTAL NO. 8 BARS = 1233'-9" = 3294 LBS.				
501	56	5'-0"	280'-0"	TRANS. TOP OF SLAB
TOTAL NO. 5 BARS = 280'-0" = 292 LBS.				
401	22	19'-7"	430'-10"	LONGIT. TOP OF SLAB
402	56	26'-2"	1465'-4"	TRANS. TOP & BOT. OF SLAB
TOTAL NO. 4 BARS = 1896'-2" = 1267 LBS.				
TOTAL DEFORMED REINFORCING STEEL = 4853 LBS.				
CLASS A1 CONCRETE = 22.08 CU. YDS.				
CONCRETE RAILING (BARRIER TYPE) = 40.00 LIN. FT.				

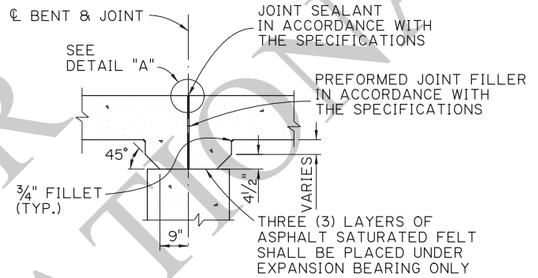

DETAIL SHOWING TYPICAL JOINT & HAUNCH
SCALE : ½" = 1'-0"

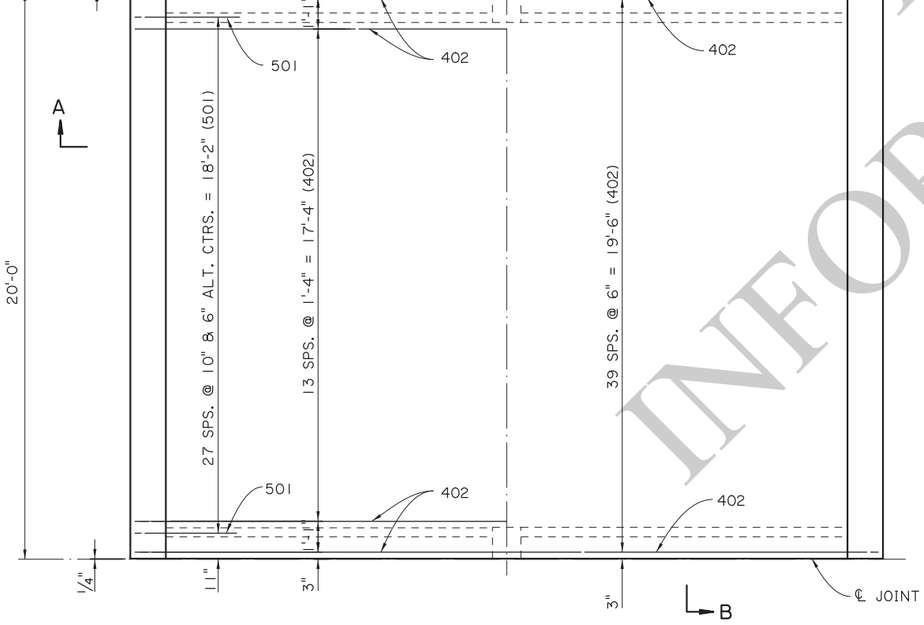

HALF SECTION
SHOWING SPACING OF TOP TRANS. REINF. STEEL
SCALE : ⅜" = 1'-0"

HALF SECTION
SHOWING SPACING OF BOTTOM TRANS. REINF. STEEL
SCALE : ⅜" = 1'-0"

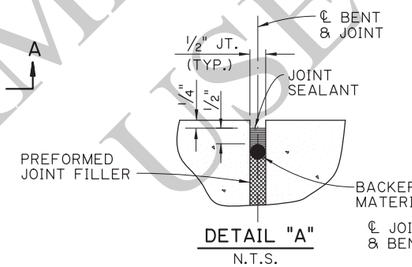

DETAIL "A"
N.T.S.

☒ STANDARD BARRIERS REQUIRED ON END SPANS.

⊠ FOR BRIDGES IN DISTRICT 04 & 05, MINIMUM CONCRETE COVER IN TOP OF SLAB SHALL BE 2½".

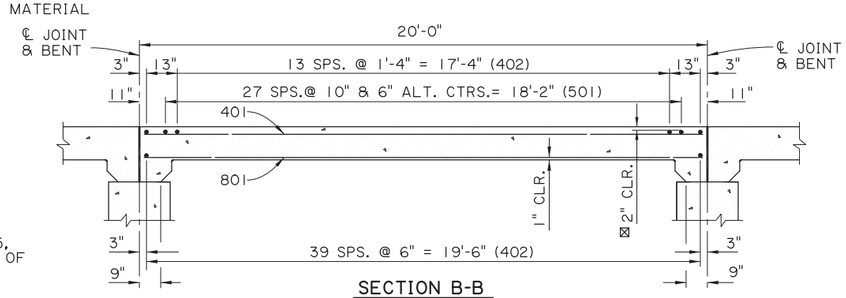

SECTION B-B
SCALE ⅜" = 1'-0"

SPAN NOTES:

DESIGN SPECIFICATIONS:
AASHTO LRFD BRIDGE DESIGN SPECIFICATIONS, 4th EDITION, WITH 2008 & 2009 INTERIMS.

DESIGN LOADS:
THE BRIDGE DECK IS DESIGNED FOR A FUTURE WEARING COURSE OF 19 PSF. THE LIVE LOAD IS HL-93, AND LADV-11 (LOUISIANA DESIGN VEHICLE LIVE LOAD 2011).

STRUCTURAL CONCRETE:
ALL CONCRETE SHALL BE CLASS A1. EXPOSED EDGES SHALL HAVE A ¾" CHAMFER UNLESS SPECIFIED OTHERWISE. ALL BARRIER RAIL SURFACES ARE TO RECEIVE A CLASS 3 SPECIAL FINISH.

REINFORCING STEEL:
ALL REINFORCING SHALL BE GRADE 60; DIMENSIONS RELATING TO SPACING ARE TO BAR CENTERS, DIMENSIONS RELATING TO FABRICATION ARE OUT TO OUT OF BARS, UNLESS SPECIFIED OTHERWISE. ALL REINFORCING BARS SHALL BE PLACED TO PROVIDE A MINIMUM COVER OF ONE INCH FROM THE SURFACE OF THE DRAIN HOLES TO THE FACE OF THE BARS.

GUARD RAIL:
CONFORM TO PROJECT PLANS AND GUARD RAIL STANDARD PLANS.

PAYMENT:
ALL WORK WILL BE PAID FOR UNDER THE DESIGNATED BRIDGE SUPERSTRUCTURE AND SUBSTRUCTURE PAY ITEM IN ACCORDANCE WITH THE SPECIFICATIONS.

AS-DESIGNED RATING		
VEHICLE	RATING FACTOR	NOTES
HL-93 (INV)	1.347	——
HL-93 (OPR)	1.746	——
LADV-11 (INV)	1.036	MAGNIFICATION FACTOR = 1.3

FOR INFORMATIONAL USE

SHEET NUMBER

PARISH | CONTROL SECTION | STATE PROJECT

DESIGN J. PAINE | CHECK J. NAKHLEH | DETAIL D. HYMEL | CHECK J. NAKHLEH | REVIEW | SERIES # 2 OF 11

APPROVED BY CHIEF ENGINEER: DATE: 12/10/2025

NO.	DATE	REVISION OR CHANGE ORDER DESCRIPTION	BY

STATE OF LOUISIANA — DEPARTMENT OF TRANSPORTATION AND DEVELOPMENT

SPAN (1 OF 2)
20'-0" CONCRETE SLAB SPAN
24'-0" CLEAR ROADWAY
90° CROSSING TWO WAY TANGENT

PSS-90-24-20SL

DOTD — LOUISIANA DEPARTMENT OF TRANSPORTATION & DEVELOPMENT

STANDARD PLAN

11/19/2025 13:3

IP_PWP:d1246419\SS9024span1(LRFD).dgn

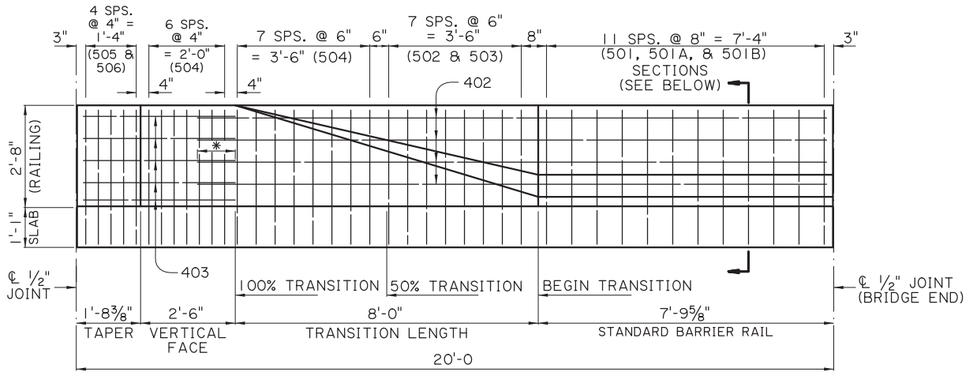

* 1'-0" (MIN.) SPLICE

BARRIER RAILING TRANSITION ELEVATION
(SHOWING BARRIER RAILING AT END OF BRIDGE)
SCALE: ½" = 1'-0"

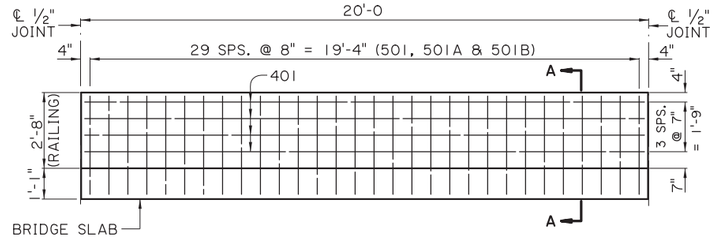

STANDARD BARRIER RAILING ELEVATION
(SHOWING BARRIER RAILING ALONG BRIDGE SLAB)
SCALE: ⅜" = 1'-0"

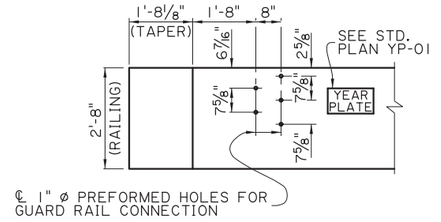

GUARD RAIL CONNECTION DETAIL
CONFORM TO GUARD RAIL STANDARD PLANS
SCALE: ½" = 1'-0"

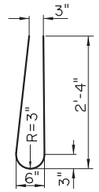

BARS 501
(4'-10" LONG)

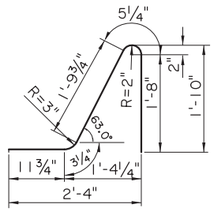

BARS 501A
(5'-2" LONG)

BARS 501B
(2½" ø PIN)
(3'-0" LONG)

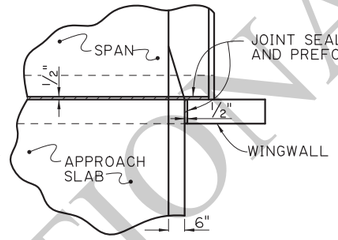

JOINT DETAIL
N.T.S.

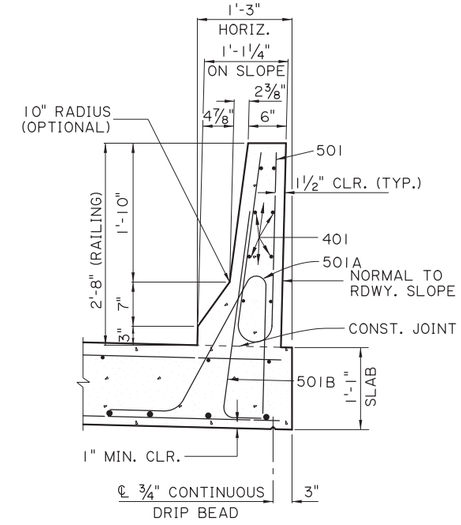

SECTION A-A
SCALE: 1" = 1'-0"

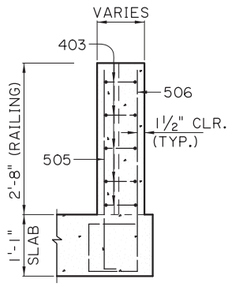

TAPER

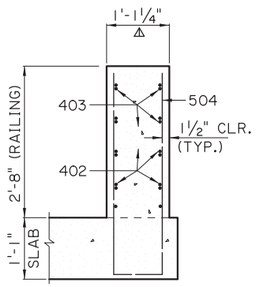

100 % TRANSITION

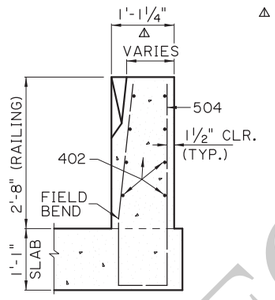

FROM 50% TO 100 % TRANSITION

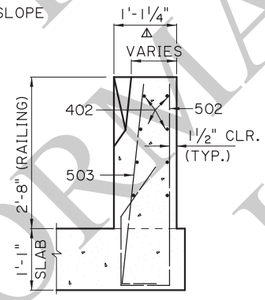

FROM BEGIN TO 50 % TRANSITION

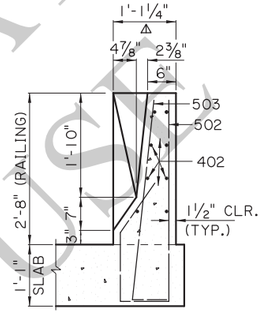

BEGIN TRANSITION

BARRIER RAILING TRANSITION SECTIONS
SCALE: ¾" = 1'-0"

⚠ ON SLOPE

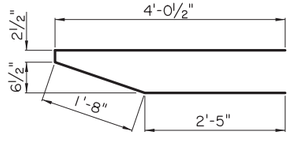

403
(2" ø PIN)

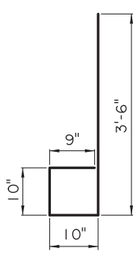

506
(2½" ø PIN)

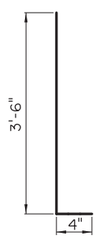

505
(2½" ø PIN)

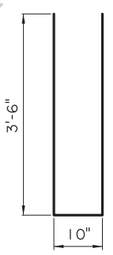

504
(2½" ø PIN)

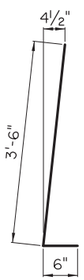

503
(2½" ø PIN)

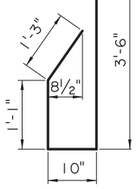

502
(2½" ø PIN)

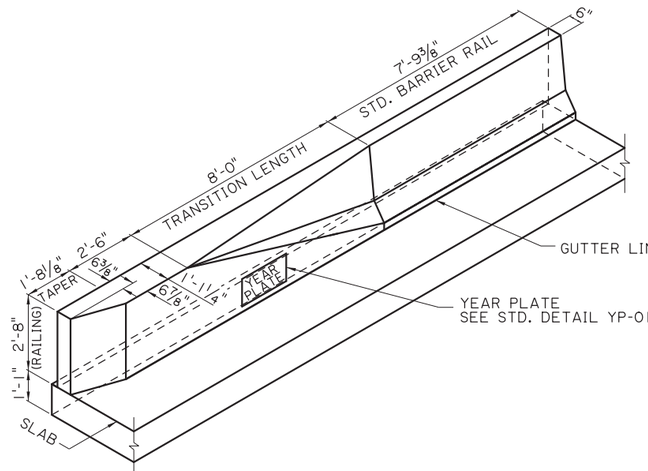

BARRIER RAILING TRANSITION SCHEMATIC
SCALE: ⅜" = 1'-0"

FOR INFORMATIONAL USE

SHEET NUMBER

PARISH | CONTROL SECTION | STATE PROJECT

DESIGN B. DELATTE | CHECK J. NAKHLEH | DETAIL D. HYMEL | CHECK J. NAKHLEH | REVIEW J. NAKHLEH | SERIES # 3 OF 11

APPROVED BY CHIEF ENGINEER: DATE: 12/10/2025

NO. | DATE | REVISION OR CHANGE ORDER DESCRIPTION | BY

SPAN (2 OF 2)
20'-0" CONCRETE BARRIER
24'-0" CLEAR ROADWAY
90° CROSSING TWO WAY TANGENT

PSS-90-24-20SL

LOUISIANA DEPARTMENT OF TRANSPORTATION & DEVELOPMENT

STANDARD PLAN

09:2
11/19/2025
IP_PWP:d1246419\SS9024span2(LRFD).dgn

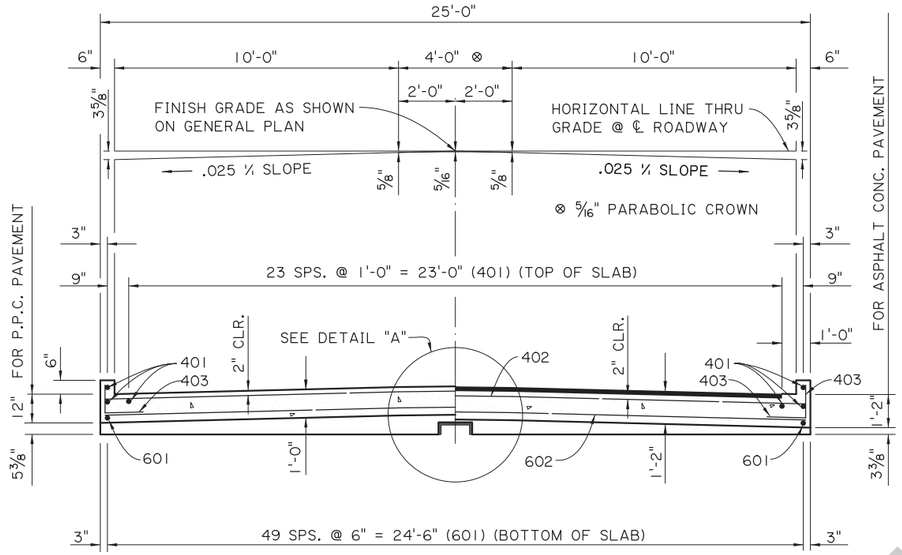

SECTION A-A

SCALE: ⅜" = 1'-0"

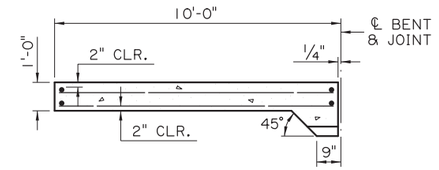

(FOR PORTLAND CEMENT CONCRETE ROADWAY PAVEMENT)

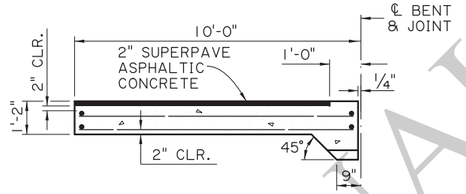

(FOR SUPERPAVE ASPHALTIC CONCRETE ROADWAY PAVEMENT)

SECTION ALONG ℄ ROADWAY

SCALE: ⅜" = 1'-0"

ESTIMATED QUANTITIES (ONE SLAB)				
BAR	NO.	UNIT LENGTH	TOTAL LENGTH	LOCATION
601	50	9'-7"	479'-2"	LONGIT. BOT. OF SLAB
602	20	24'-8"	493'-4"	TRANSV. BOT. OF SLAB
TOTAL NO. 6 BARS = 972'-6" = 1,461 LBS.				
401	28	9'-7"	268'-4"	LONGIT. TOP OF SLAB & CURB
402	11	24'-8"	271'-4"	TRANSV. TOP OF SLAB
403	14	2'-0"	28'-0"	DOWELS IN CURB
TOTAL NO. 4 BARS = 567'-8" = 379 LBS.				
⊙ TOTAL DEFORMED REINFORCING STEEL = 1,840 LBS.				
CONCRETE APPROACH SLAB = 27.78 SQ. YDS.				
⊙☑ SUPERPAVE ASPHALTIC CONCRETE = 2.5 TONS				
⊙☑ SAW CUT & SEAL = 23 LIN. FT.				

⊙ TO BE PAID FOR UNDER ITEM CONCRETE APPROACH SLABS.

☑ REQUIRED WHEN APPROACH SLAB IS ADJACENT TO SUPERPAVE ASPHALTIC CONCRETE PAVEMENT.

APPROACH SLAB NOTES:

DESIGN SPECIFICATIONS: AASHTO LRFD BRIDGE DESIGN SPECIFICATIONS 4th EDITION, WITH 2008 & 2009 INTERIMS.
STRUCTURAL CONCRETE: ALL CONCRETE SHALL BE CLASS A1. EXPOSED EDGES SHALL HAVE A ¾" CHAMFER, UNLESS SPECIFIED OTHERWISE.
SUPERPAVE ASPHALTIC CONCRETE: TO BE THE SAME TYPE AS THE SUPERPAVE ASPHALTIC CONCRETE USED FOR THE APPROACH ROADWAY PAVEMENT OR OVERLAY.
REINFORCING STEEL: ALL REINFORCING STEEL SHALL BE GRADE 60. DIMENSIONS RELATING TO THE FABRICATION ARE OUT-TO-OUT OF BARS, UNLESS SPECIFIED OTHERWISE. DIMENSIONS RELATING TO SPACING ARE TO BAR CENTERS.
BEDDING MATERIAL: FOR DETAILS OF BEDDING MATERIAL AND UNDERDRAINS SEE APPROACH SLAB STANDARD DETAILS.
SAWING & SEALING: THE SUPERPAVE ASPHALTIC CONCRETE SHALL BE SAW CUT AT THE END OF THE CONCRETE APPROACH SLAB THE ENTIRE ROADWAY WIDTH AND SEALED WHICH WILL BE PAID FOR UNDER THE DESIGNATED ROADWAY PAY ITEM.
PAYMENT: ALL OTHER WORK WILL BE PAID FOR UNDER THE DESIGNATED BRIDGE CONCRETE APPROACH SLAB PAY ITEM AND IN ACCORDANCE WITH THE SPECIFICATIONS.

403
2" ϕ PIN

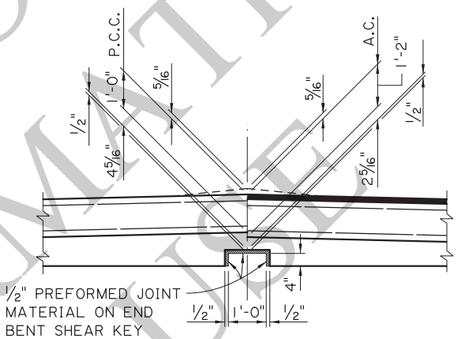

DETAIL A

SCALE : ½" = 1'-0"

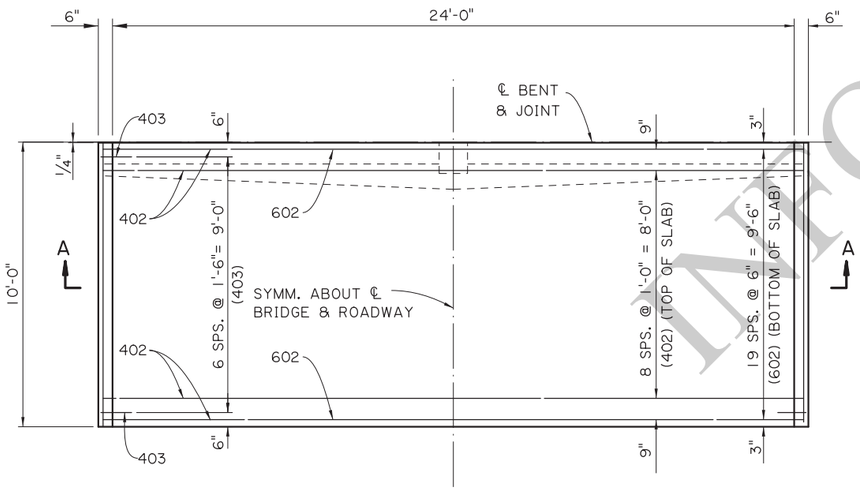

PLAN

SCALE: ⅜" = 1'-0"

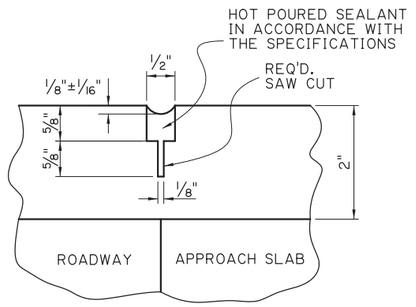

SAWING & SEALING JOINT DETAIL

N.T.S.

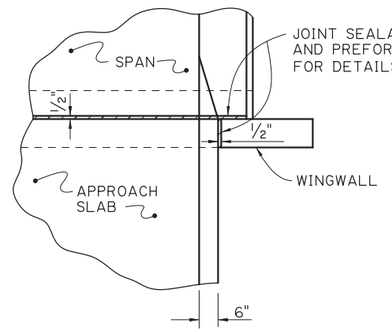

JOINT DETAIL

N.T.S.

FOR INFORMATIONAL USE

SHEET NUMBER

PARISH | CONTROL SECTION | STATE PROJECT

DESIGN J. PAINE | CHECK J. NAKHLEH | DETAIL D. HYMEL | CHECK J. NAKHLEH | REVIEW | SERIES # 4 OF 11

APPROVED BY CHIEF ENGINEER: DATE: 12/10/2025

NO. | DATE | REVISION OR CHANGE ORDER DESCRIPTION | BY

STATE OF LOUISIANA

APPROACH SLAB
10'-0" CONCRETE APPROACH SLAB
24'-0" CLEAR ROADWAY
90° CROSSING-TWO WAY TANGENT

PSS-90-24-20SL

DOTD LOUISIANA DEPARTMENT OF TRANSPORTATION & DEVELOPMENT

STANDARD PLAN

11/19/2025 09:2

IP_PWP:d1246419\SS9024aprslab(LRFD).dgn

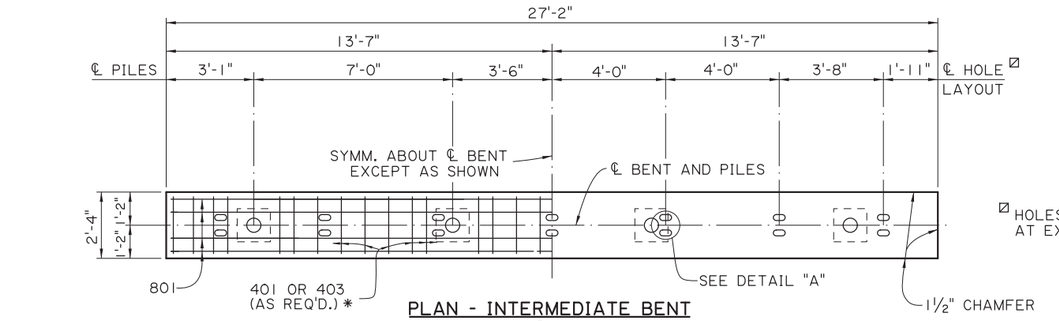

PLAN - INTERMEDIATE BENT
SCALE ⅜" = 1'-0"

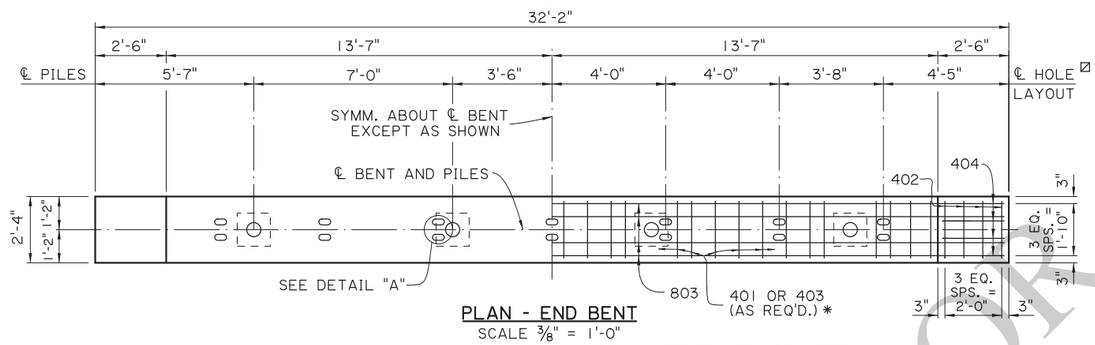

PLAN - END BENT
SCALE ⅜" = 1'-0"

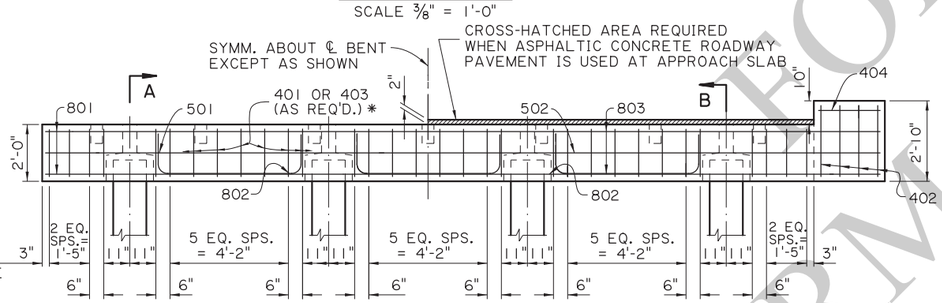

HALF ELEVATION - INTERMEDIATE BENT
SCALE ⅜" = 1'-0"

HALF ELEVATION - END BENT
SCALE ⅜" = 1'-0"

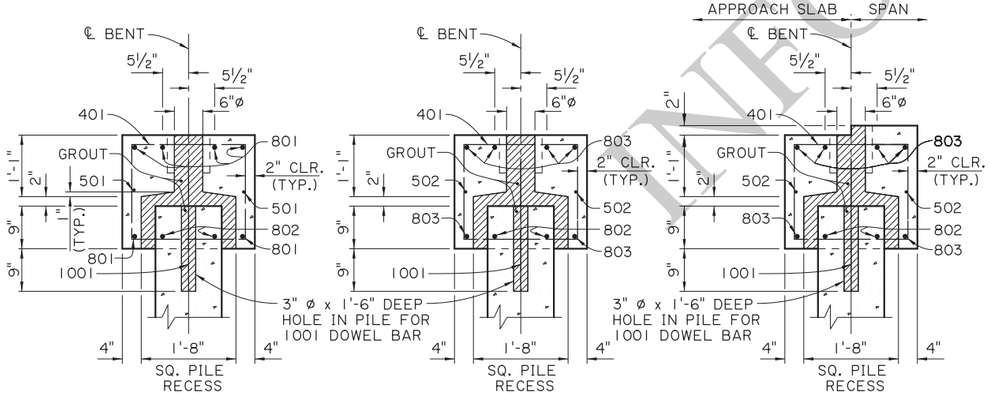

SECTION A-A
SCALE: ¾" = 1'-0"

SECTION B-B
SCALE: ¾" = 1'-0"
(WHEN PORTLAND CEMENT CONCRETE ROADWAY PAVEMENT IS USED AT APPROACH SLAB)

SECTION B-B
SCALE: ¾" = 1'-0"
(WHEN ASPHALTIC CONCRETE ROADWAY PAVEMENT IS USED AT APPROACH SLAB)

℄ HOLES ARE OPTIONAL AT EXPANSION ENDS.

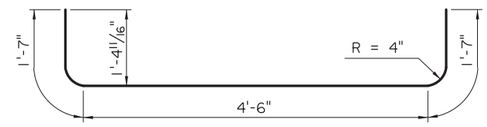

802
6" ø PIN

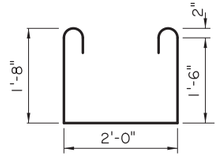

403
2" ø PIN

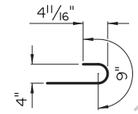

180° HOOK FOR 403 BARS
3" ø PIN

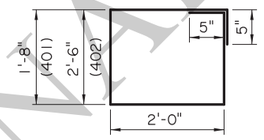

401 & 402
2" ø PIN

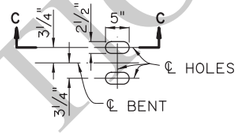

DETAIL A
SCALE ¾" = 1'-0"

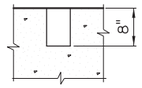

SECTION C-C
SCALE ¾" = 1'-0"

AS-DESIGNED RATING		
VEHICLE	RATING FACTOR	NOTES
HL-93 (INV)	2.373	——
HL-93 (OPR)	3.076	——
LADV-11 (INV)	1.825	MAGNIFICATION FACTOR = 1.3

ESTIMATED QUANTITIES (ONE INTER. BENT)				
BAR	NO.	UNIT LENGTH	TOTAL LENGTH	LOCATION
1001	4	2'-4"	9'-4"	DOWELS IN PILES
TOTAL NO. 10 BARS = 9'-4" = 40 LBS.				
801	6	26'-10"	161'-0"	LONGIT. IN CAP
802	6	7'-8"	46'-0"	LONGIT. IN CAP BTW. PILES
TOTAL NO. 8 BARS = 207'-0" = 553 LBS.				
501	2	26'-10"	53'-8"	LONGIT. IN CAP
TOTAL NO. 5 BARS = 53'-8" = 56 LBS.				
401	26	8'-2"	212'-4"	STIRRUPS IN CAP
403	6	6'-6"	39'-0"	STIRRUPS IN CAP
TOTAL NO. 4 BARS = 251'-4" = 168 LBS.				
TOTAL DEFORMED REINFORCING STEEL = 817 LBS.				
TOTAL CLASS P1 CONCRETE = 4.38 CU. YDS.				
MAX. PILE LOAD: SERVICE DEAD LOAD = 17 TONS SERVICE LIVE LOAD = 34 TONS FACTORED TOTAL LOAD = 71 TONS				
TOTAL GROUT FOR PILE RECESSES = 0.28 CU. YDS.				

ESTIMATED QUANTITIES (ONE END BENT)				
BAR	NO.	UNIT LENGTH	TOTAL LENGTH	LOCATION
1001	4	2'-4"	9'-4"	DOWELS IN PILES
TOTAL NO. 10 BARS = 9'-4" = 40 LBS.				
802	6	7'-8"	46'-0"	LONGIT. IN CAP BTW. PILES
803	6	31'-10"	191'-0"	LONGIT. IN CAP
TOTAL NO. 8 BARS = 237'-0" = 633 LBS.				
502	2	31'-10"	63'-8"	LONGIT. IN CAP
TOTAL NO. 5 BARS = 63'-8" = 66 LBS.				
401	26	8'-2"	212'-4"	STIRRUPS IN CAP
402	8	9'-10"	78'-8"	STIRRUPS IN WINGWALL
403	6	6'-6"	39'-0"	STIRRUPS IN CAP
404	8	2'-2"	17'-4"	LONGIT. IN WINGWALL
TOTAL NO. 4 BARS = 347'-4" = 232 LBS.				
TOTAL DEFORMED REINFORCING STEEL = 971 LBS.				
⊗ TOTAL CLASS P1 CONCRETE = 5.60 CU. YDS.				
MAX. PILE LOAD: SERVICE DEAD LOAD = 17 TONS SERVICE LIVE LOAD = 34 TONS FACTORED TOTAL LOAD = 71 TONS				
TOTAL GROUT FOR PILE RECESSES = 0.28 CU. YDS.				

⊗ ADD 0.20 CU. YDS. OF CLASS P1 CONCRETE PER BENT WHEN ASPHALTIC CONCRETE ROADWAY PAVEMENT IS USED AT APPROACH SLAB.

ALTERNATE BENT NOTES:

DESIGN SPECIFICATIONS: AASHTO LRFD BRIDGE DESIGN SPECIFICATIONS, 4th EDITION, WITH 2008 & 2009 INTERIMS.
DESIGN LOAD: LIVE LOAD IS HL-93, AND LADV-11 (LOUISIANA DESIGN VEHICLE LIVE LOAD 2011).
STRUCTURAL CONCRETE: ALL CONCRETE SHALL BE CLASS P1. STEEL SIDE FORMS AND STEEL OR CONCRETE BOTTOM FORMS SHALL BE USED FOR PRECAST COMPONENTS. EXPOSED EDGES SHALL HAVE A ¾" CHAMFER UNLESS SPECIFIED OTHERWISE. ALL SURFACES SHALL RECEIVE A CLASS I ORDINARY SURFACE FINISH UPON REMOVAL OF THE FORMS. ALL EXPOSED FACES OF WINGWALLS AND ENDS OF CAPS SHALL RECEIVE A CLASS 3 SPECIAL FINISH.
REINFORCING STEEL: ALL REINFORCING SHALL BE GRADE 60. DIMENSIONS RELATING TO FABRICATION ARE OUT TO OUT OF BARS, UNLESS SPECIFIED OTHERWISE. DIMENSIONS RELATING TO SPACING ARE TO BAR CENTERS, UNLESS SPECIFIED OTHERWISE.
GROUT: THE GROUT SHALL BE AN APPROVED FLOWABLE NON-SHRINK GROUT LISTED ON AML. THE GROUT SHALL BE TESTED FOR ACCEPTANCE PRIOR TO USAGE. SURFACES SHALL BE THOROUGHLY SATURATED WITH WATER BY FLOODING THE VOID FOR APPROXIMATELY 5 MINUTES IMMEDIATELY BEFORE THE GROUT IS PLACED. ONLY POTABLE WATER SHALL BE USED FOR SATURATION AND MIXING PURPOSES.
PRECAST UNITS: THE PLANS FOR AN ONGOING OPERATION OF FABRICATING FACILITIES SHALL BE APPROVED BY THE DEPARTMENT. EACH UNIT SHALL HAVE THE FABRICATOR'S MARK AND UNIQUE NUMBER, MEETING THE APPROVAL OF THE ENGINEER, STAMPED OR SCRIBED IN THE PLASTIC CONCRETE. ALL UNITS SHALL BE HELD AT THE PLANT FOR A MINIMUM OF 10 DAYS AFTER CASTING. THE CONCRETE SHALL REACH A MINIMUM STRENGTH OF 3,000 PSI BEFORE HANDLING IS PERMITTED. THE LIFTING INSERTS SHALL BE 1" TYPE S INSERTS AS MANUFACTURED BY DAYTON-SUPERIOR CORPORATION OR AN APPROVED EQUAL. EACH INSERT SHALL HAVE A MINIMUM LOAD CAPACITY OF 10,000 POUNDS. FOUR INSERTS WITH 1" ø x 5" LONG COIL BOLTS SHALL BE PLACED IN THE TOP OF THE UNITS AND LOCATED AT A DISTANCE 21% OF ITS LENGTH (+/- 6") FROM EACH END AND 6" FROM THE EDGES. INSERT HOLES SHALL BE GROUT FILLED AFTER PLACEMENT OF THE UNIT. AT THE CONTRACTOR'S OPTION, A SLING OF SUFFICIENT CAPACITY MAY BE USED FOR LIFTING, PROVIDED THE SAME PICKUP LOCATIONS FROM THE ENDS ARE USED.
PRECAST CONCRETE PILES: CONFORM TO PILE STANDARD PLAN AND PROJECT PLANS FOR FABRICATION AND INSTALLATION. IF TOP CENTER OF DRIVEN PILE IS OUTSIDE OF SPECIFIED HORIZONTAL TOLERANCES BUT WITHIN SPECIFIED VERTICAL TOLERANCES, PROVIDE CAST-IN-PLACE BENT CAP IN ACCORDANCE WITH THIS STANDARD PLAN. PILES WILL BE PAID FOR UNDER THE DESIGNATED PILE PAY ITEMS.
PAYMENT: ALL OTHER WORK WILL BE PAID FOR UNDER THE DESIGNATED BRIDGE SUPERSTRUCTURE AND SUBSTRUCTURE PAY ITEM AND IN ACCORDANCE WITH THE SPECIFICATIONS.

INFORMATIONAL USE ONLY

SHEET NUMBER
PARISH | CONTROL SECTION | STATE PROJECT
DESIGN J. PAINE | CHECK J. NAKHLEH | DETAIL D. HYMEL | CHECK J. NAKHLEH | REVIEW | SERIES # 5 OF 11
APPROVED BY CHIEF ENGINEER:
DATE: 12/10/2025
REVISION OR CHANGE ORDER DESCRIPTION | BY | DATE | NO.

STATE OF LOUISIANA — DEPARTMENT OF TRANSPORTATION AND DEVELOPMENT

ALTERNATE BENTS
PRECAST CONCRETE BENT
24'-0" CLEAR ROADWAY
90° CROSSING TWO WAY TANGENT
PSS-90-24-20SL

DOTD — LOUISIANA DEPARTMENT OF TRANSPORTATION & DEVELOPMENT

STANDARD PLAN

11/24/2025 16:31
IP_PWP:d1246419\SS9024altbent1(LRFD).dgn

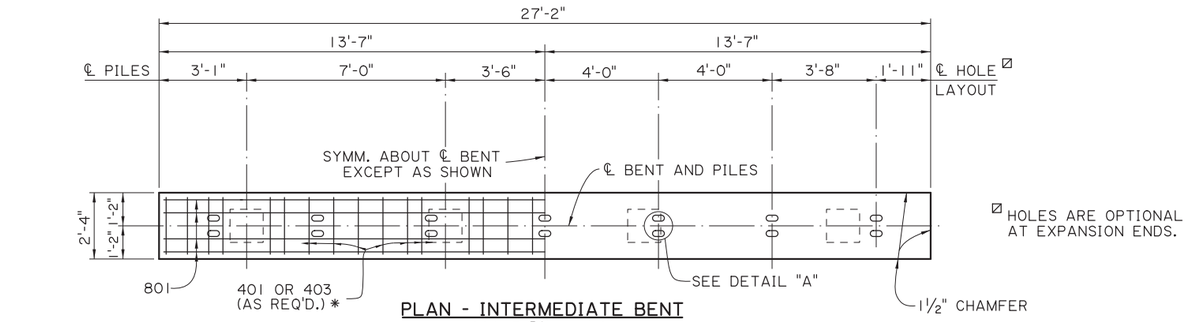

PLAN - INTERMEDIATE BENT
SCALE ⅜" = 1'-0"

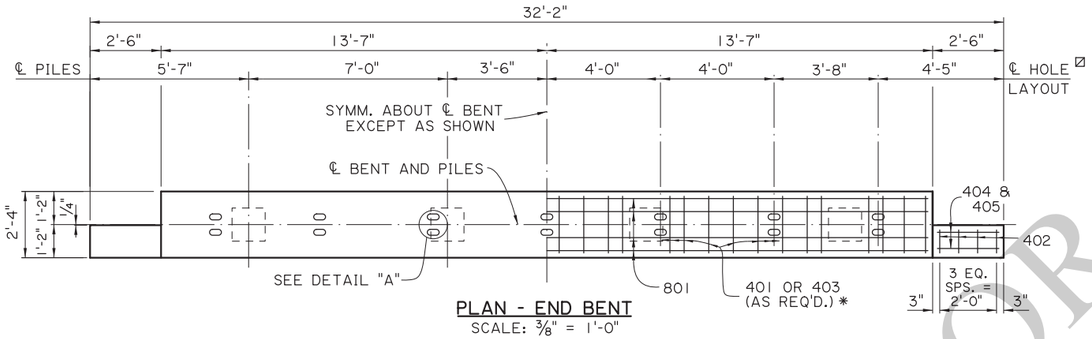

PLAN - END BENT
SCALE: ⅜" = 1'-0"

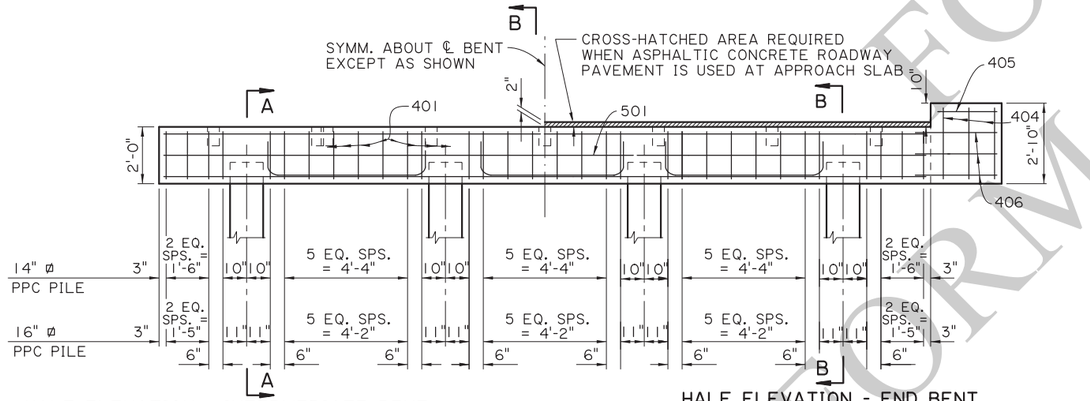

HALF ELEVATION - INTERMEDIATE BENT
SCALE ⅜" = 1'-0"

HALF ELEVATION - END BENT
SCALE ⅜" = 1'-0"

SECTION A-A
SCALE: ¾" = 1'-0"

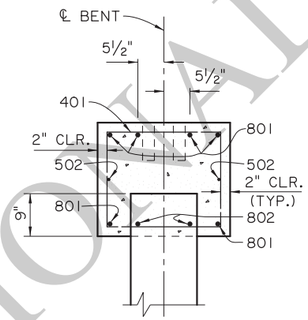

SECTION B-B
SCALE :¾" = 1'-0"
(WHEN PORTLAND CEMENT CONCRETE ROADWAY PAVEMENT IS USED AT APPROACH SLAB)

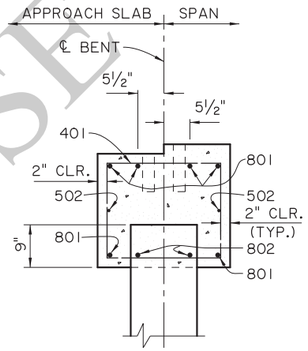

SECTION B-B
SCALE :¾" = 1'-0"
(WHEN ASPHALTIC CONCRETE ROADWAY PAVEMENT IS USED AT APPROACH SLAB)

ESTIMATED QUANTITIES (ONE INTER. BENT)				
BAR	NO.	UNIT LENGTH	TOTAL LENGTH	LOCATION
801	6	26'-10"	161'-0"	LONGIT. IN CAP
802	6	7'-8"	46'-0"	LONGIT. IN CAP BTW. PILES
TOTAL NO. 8 BARS = 207'-0" = 553 LBS.				
501	2	26'-10"	53'-8"	LONGIT. IN CAP
TOTAL NO. 5 BARS = 53'-8" = 56 LBS.				
401	26	8'-2"	212'-4"	STIRRUPS IN CAP
403	6	6'-6"	39'-0"	STIRRUPS IN CAP
TOTAL NO. 4 BARS = 251'-4" = 168 LBS.				
TOTAL DEFORMED REINFORCING STEEL = 777 LBS.				
⊠ TOTAL CLASS A1 CONCRETE = 4.50 CU. YDS.				
MAX. PILE LOAD: SERVICE DEAD LOAD = 17 TONS				
SERVICE LIVE LOAD = 34 TONS				
FACTORED TOTAL LOAD = 71 TONS				

⊠ 16" ø PPC PILES USED FOR ESTIMATING PURPOSES ONLY. (ADD 0.05 CU. YDS. OF CLASS A1 CONCRETE PER BENT WHEN 14" ø PPC PILES ARE USED.)

ESTIMATED QUANTITIES (ONE END BENT)				
BAR	NO.	UNIT LENGTH	TOTAL LENGTH	LOCATION
801	6	26'-10"	161'-0"	LONGIT. IN CAP
802	6	7'-8"	46'-0"	LONGIT. IN CAP BTW. PILES
TOTAL NO. 8 BARS = 207'-0" = 553 LBS.				
501	2	26'-10"	53'-8"	LONGIT. IN CAP
TOTAL NO. 5 BARS = 53'-8" = 56 LBS.				
401	26	8'-2"	212'-4"	STIRRUPS IN CAP
402	8	7'-6"	60'-0"	STIRRUPS IN WINGWALL
403	6	6'-6"	39'-0"	STIRRUPS IN CAP
404	4	2'-2"	8'-8"	LONGIT. IN WINGWALL
405	12	4'-0"	48'-0"	LONGIT. IN WINGWALL
TOTAL NO. 4 BARS = 368'-0" = 246 LBS.				
TOTAL DEFORMED REINFORCING STEEL = 855 LBS.				
⊗ TOTAL CLASS A1 CONCRETE = 5.10 CU. YDS.				
MAX. PILE LOAD: SERVICE DEAD LOAD = 17 TONS				
SERVICE LIVE LOAD = 34 TONS				
FACTORED TOTAL LOAD = 71 TONS				

⊗ 16" ø PPC PILES USED FOR ESTIMATING PURPOSES ONLY. (ADD 0.05 CU. YDS. OF CLASS A1 CONCRETE PER BENT WHEN 14" ø PPC PILES ARE USED.) ADD 0.20 CU. YDS. OF CLASS A1 CONCRETE PER BENT WHEN ASPHALTIC CONCRETE ROADWAY PAVEMENT IS USED AT APPROACH SLAB.

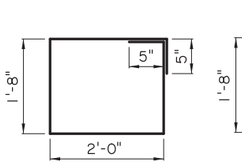

401
2" ø PIN

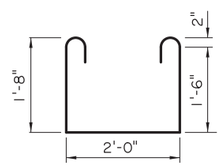

403
2" ø PIN

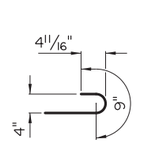

180° HOOK FOR 403 BARS
3" ø PIN

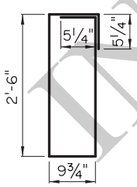

402
2" ø PIN

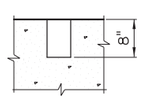

SECTION C-C
SCALE: ¾" = 1'-0"

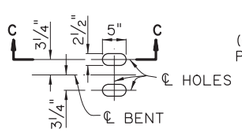

DETAIL A
SCALE: ¾" = 1'-0"

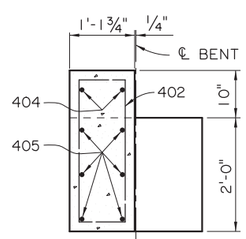

END ELEVATION
SCALE: ¾" = 1'-0"

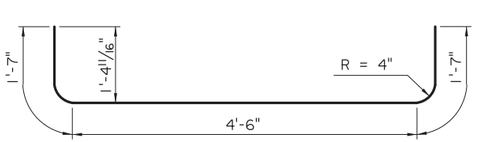

802
6" ø PIN

AS-DESIGNED RATING		
VEHICLE	RATING FACTOR	NOTES
HL-93 (INV)	2.328	——
HL-93 (OPR)	3.018	——
LADV-11 (INV)	1.791	MAGNIFICATION FACTOR = 1.3

ALTERNATE BENT NOTES:

DESIGN SPECIFICATIONS: AASHTO LRFD BRIDGE DESIGN SPECIFICATIONS, 4th EDITION, WITH 2008 & 2009 INTERIMS.

DESIGN LOAD: LIVE LOAD IS HL-93. AND LADV-11 (LOUISIANA DESIGN VEHICLE LIVE LOAD 2011).

STRUCTURAL CONCRETE: ALL CONCRETE SHALL BE CLASS A1. EXPOSED EDGES SHALL HAVE A ¾" CHAMFER UNLESS SPECIFIED OTHERWISE. ALL EXPOSED FACES OF WINGWALLS AND ENDS OF CAPS SHALL RECEIVE A SURFACE FINISH AS PER THE SPECIFICATIONS UNLESS SPECIFIED OTHERWISE.

REINFORCING STEEL: ALL REINFORCING SHALL BE GRADE 60. DIMENSIONS RELATING TO FABRICATION ARE OUT TO OUT OF BARS, UNLESS SPECIFIED OTHERWISE. DIMENSIONS RELATING TO SPACING ARE TO BAR CENTERS, UNLESS SPECIFIED OTHERWISE.

PRECAST CONCRETE PILES: CONFORM TO PILE STANDARD PLAN AND PROJECT PLANS FOR FABRICATION AND INSTALLATION. PILES WILL BE PAID FOR UNDER THE DESIGNATED PILE PAY ITEMS.

PAYMENT: ALL OTHER WORK WILL BE PAID FOR UNDER THE DESIGNATED BRIDGE SUPERSTRUCTURE AND SUBSTRUCTURE PAY ITEM AND IN ACCORDANCE WITH THE SPECIFICATIONS.

INFORMATIONAL USE ONLY

SHEET NUMBER
PARISH
CONTROL SECTION
STATE PROJECT
DESIGN J. PAINE
CHECK J. NAKHLEH
DETAIL D. HYMEL
CHECK J. NAKHLEH
REVIEW
SERIES # 6 OF 11
APPROVED BY CHIEF ENGINEER:
DATE: 12/10/2025

NO.	DATE	REVISION OR CHANGE ORDER DESCRIPTION	BY
1	3-31-04	801 BAR DESIGNATION	

STATE OF LOUISIANA
DEPARTMENT OF TRANSPORTATION AND DEVELOPMENT

ALTERNATE BENTS
CAST-IN-PLACE CONCRETE BENT
24'-0" CLEAR ROADWAY
90° CROSSING TWO WAY TANGENT

PSS-90-24-20SL

DOTD
LOUISIANA DEPARTMENT OF TRANSPORTATION & DEVELOPMENT

STANDARD PLAN

11/24/2025 15:4
IP_PWP:d1246419\SS9024altbent2(LRFD).dgn

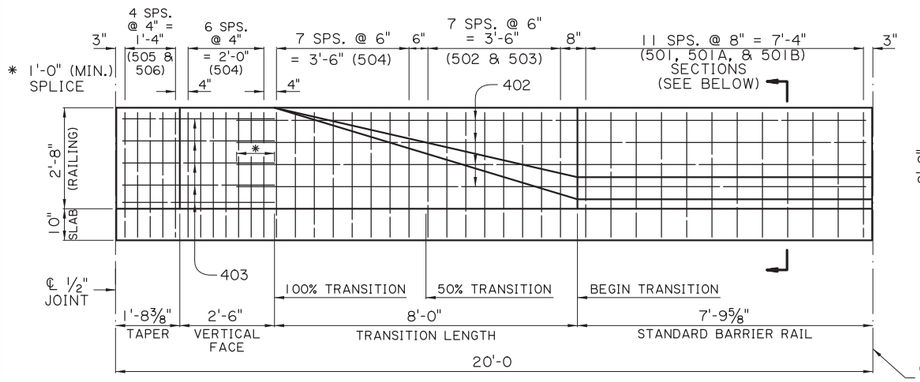

BARRIER RAILING TRANSITION ELEVATION
(SHOWING BARRIER RAILING AT END OF BRIDGE)
SCALE: ½" = 1'-0"

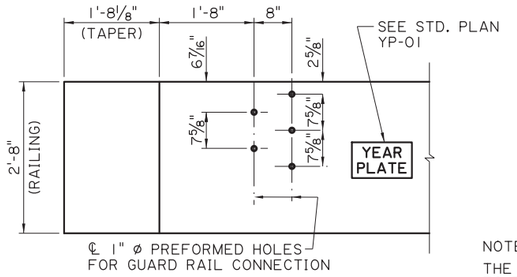

GUARD RAIL CONNECTION DETAIL
CONFORM TO GUARD RAIL STANDARD PLANS
SCALE: ¾" = 1'-0"

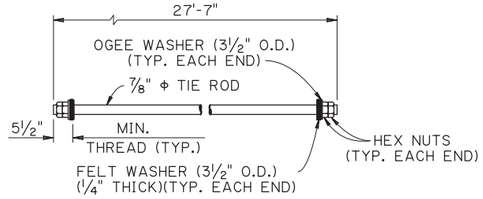

NOTE:
THE NUTS & WASHERS FOR THE TIE ROD SHALL BE ZINC COATED AND THE EXPOSED ENDS TO THE TIE RODS SHALL BE PAINTED WITH AN APPROVED COATING. AS A FINAL OPERATION THE CONTRACTOR SHALL BE REQUIRED TO TORQUE THE INSTALLED TIE ROD TO 170 FT. LBS. JUST PRIOR TO PAINTING. ALL EXPOSED ENDS SHALL BE PAINTED WITH AN APPROVED COATING AFTER STRESSING. ONE (1) MECHANICAL SPLICE MAY BE USED IN SPLICING THE ⅞" ø TIE ROD. THE SPLICE SHALL DEVELOP AT LEAST 125% OF THE SPECIFIED YIELD STRENGTH OF THE TIE ROD IN TENSION. THE MECHANICAL SPLICE SHALL BE ZINC COATED OR PAINTED WITH AN APPROVED COLD GALVANIZING REPAIR COMPOUND FROM AML PRIOR TO PLACING THE TIE ROD IN THE STRUCTURE.

DETAILS OF TIE ROD

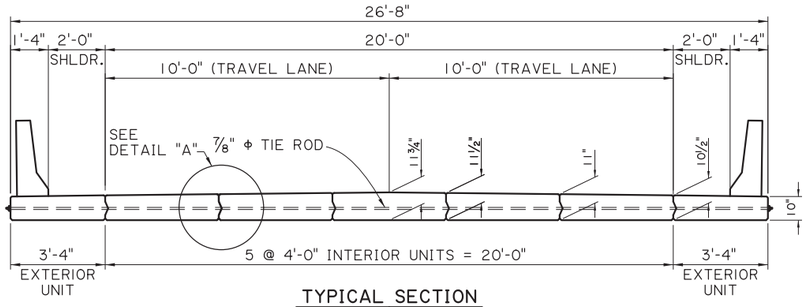

TYPICAL SECTION
SCALE: ⅜" = 1'-0"

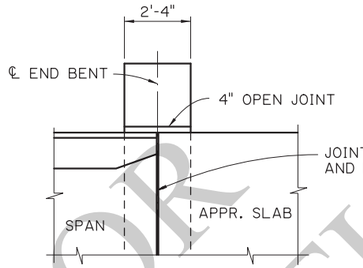

JOINT DETAIL
N.T.S.

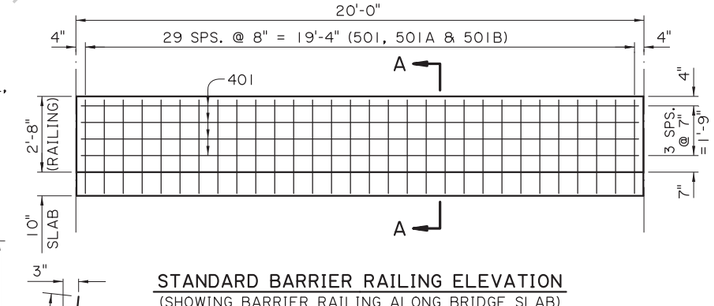

STANDARD BARRIER RAILING ELEVATION
(SHOWING BARRIER RAILING ALONG BRIDGE SLAB)
SCALE: ⅜" = 1'-0"

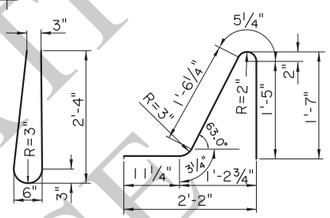

BARS 501 (4'-10" LONG)

BARS 501A (4'-7" LONG)

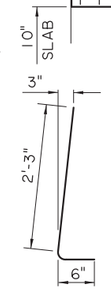

BARS 501B
(2½" ø PIN)
(2'-9" LONG)

Ø MAY BE ⅛" IF ADJACENT MATCH IS USED

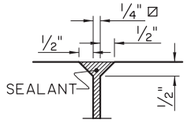

DETAIL "B"
SCALE: 1" = 1'-0"

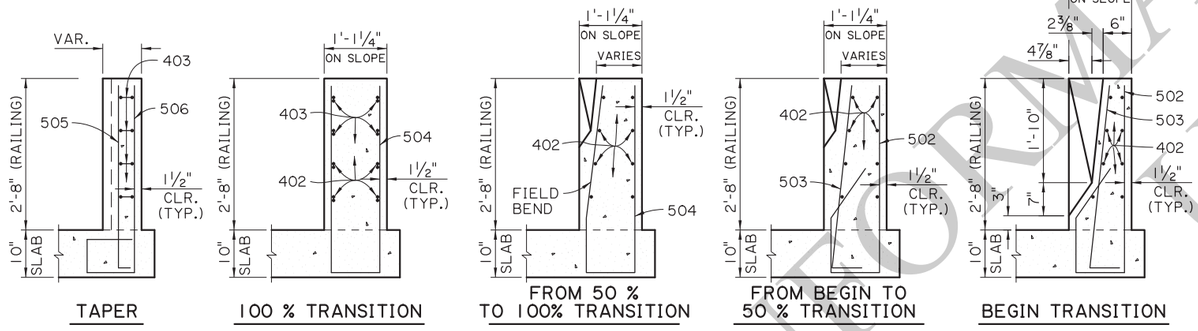

TAPER

100 % TRANSITION

FROM 50 % TO 100% TRANSITION

FROM BEGIN TO 50 % TRANSITION

BEGIN TRANSITION

BARRIER RAILING TRANSITION SECTIONS
SCALE: ¾" = 1'-0"

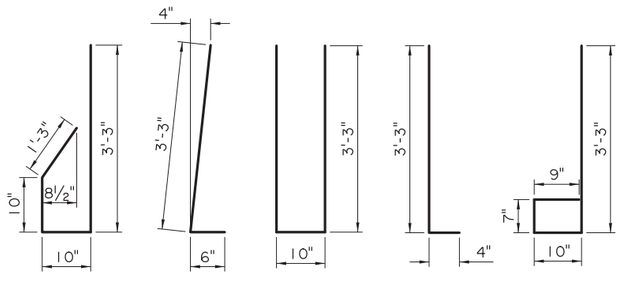

502 (2½" ø PIN) (6'-2" LONG)

503 (2½" ø PIN) (3'-9" LONG)

504 (2½" ø PIN) (7'-4" LONG)

505 (2½" ø PIN) (3'-7" LONG)

506 (2½" ø PIN) (5'-5" LONG)

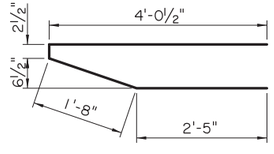

403 (2" ø PIN) (8'-4" LONG)

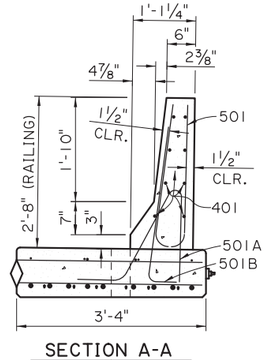

SECTION A-A
SCALE: ¾" = 1'-0"

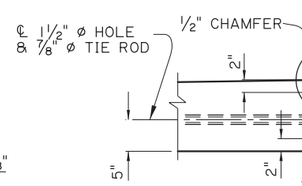

DETAIL "A"
SCALE: 1" = 1'-0"

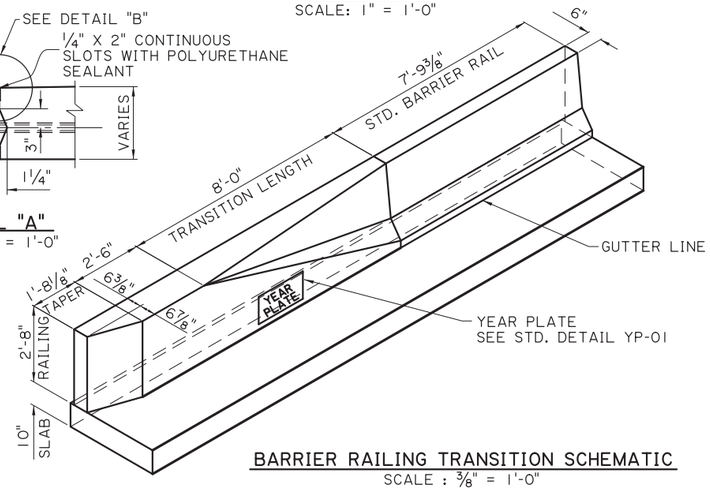

BARRIER RAILING TRANSITION SCHEMATIC
SCALE: ⅜" = 1'-0"

FOR INFORMATIONAL USE

SHEET NUMBER	
PARISH	
CONTROL SECTION	
STATE PROJECT	
DESIGN B. DELATTE	DETAIL D. HYMEL
CHECK J. NAKHLEH	CHECK J. NAKHLEH
REVIEW	SERIES # 7 OF 11

APPROVED BY CHIEF ENGINEER: DATE: 12/10/2025

NO.	DATE	REVISION OR CHANGE ORDER DESCRIPTION	BY

ALTERNATE SPAN (1 OF 4)
20'-0" PRECAST CONC. SLAB SPAN

24'-0" CLEAR ROADWAY
90° CROSSING TWO WAY TANGENT

PSS-90-24-20SL

DOTD LOUISIANA DEPARTMENT OF TRANSPORTATION & DEVELOPMENT

STANDARD PLAN

11/24/2025 15:4

IP_PWP:d1246419\SS9024altspan1(LRFD).dgn

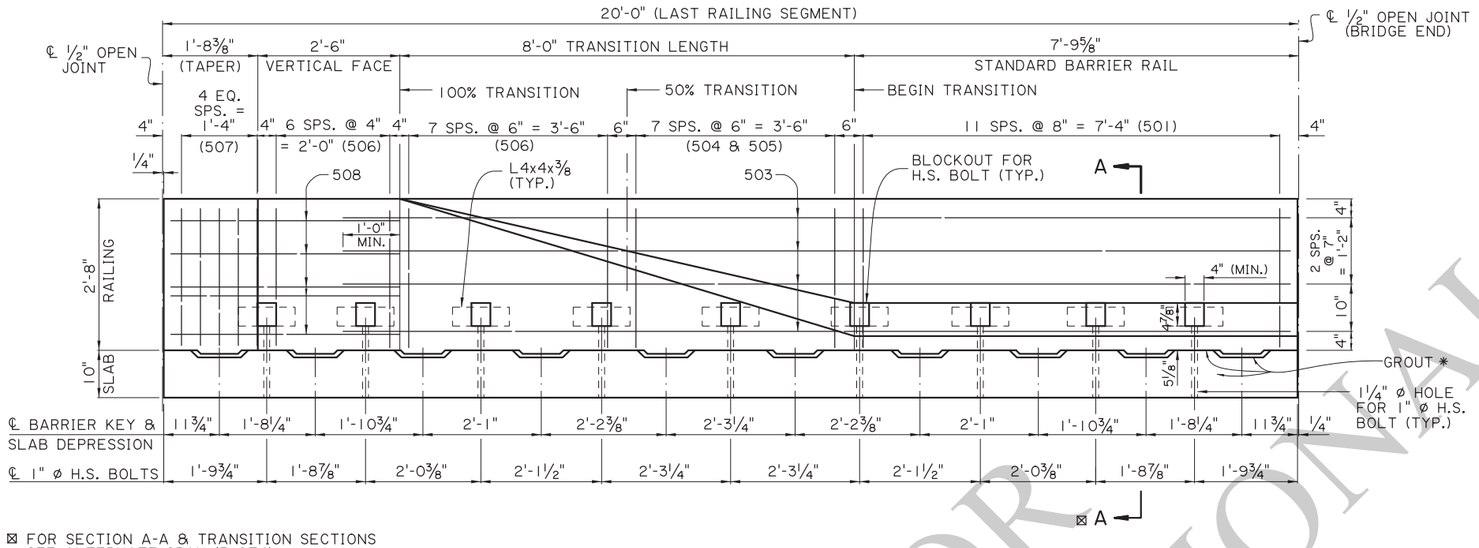

⊠ FOR SECTION A-A & TRANSITION SECTIONS SEE ALTERNATE SPAN (3 OF4)

PRECAST BARRIER RAILING TRANSITION ELEVATION

(SHOWING BARRIER RAILING AT END OF BRIDGE)
SCALE: ¾" = 1'-0"

* PLACE OR INJECT NON-SHRINK GROUT AS REQUIRED IN BETWEEN SLAB DEPRESSIONS TO FILL ALL VOIDS AND GAPS FOR FULL EVEN BEARING OF THE BARRIER ON THE SLAB. SEE NOTE 3, SHEET 9 OF 11.

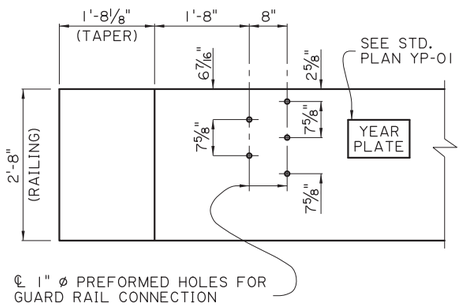

GUARD RAIL CONNECTION DETAIL

CONFORM TO GUARD RAIL STAND PLANS
SCALE: ¾" = 1'-0"

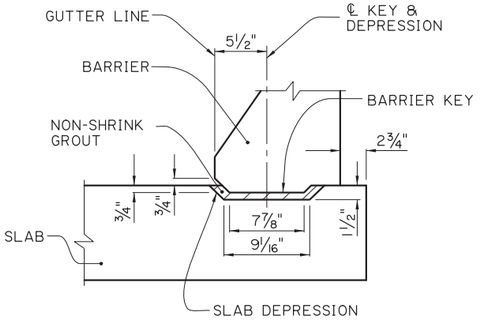

ELEVATION

SCALE: 1½" = 1'-0"

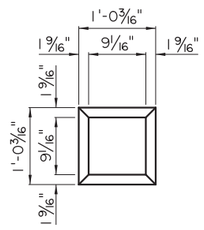

PLAN-DEPRESSION

SCALE: 1" = 1'-0"

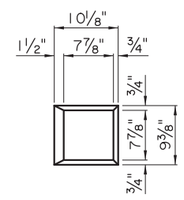

PLAN-KEY

SCALE: 1" = 1'-0"

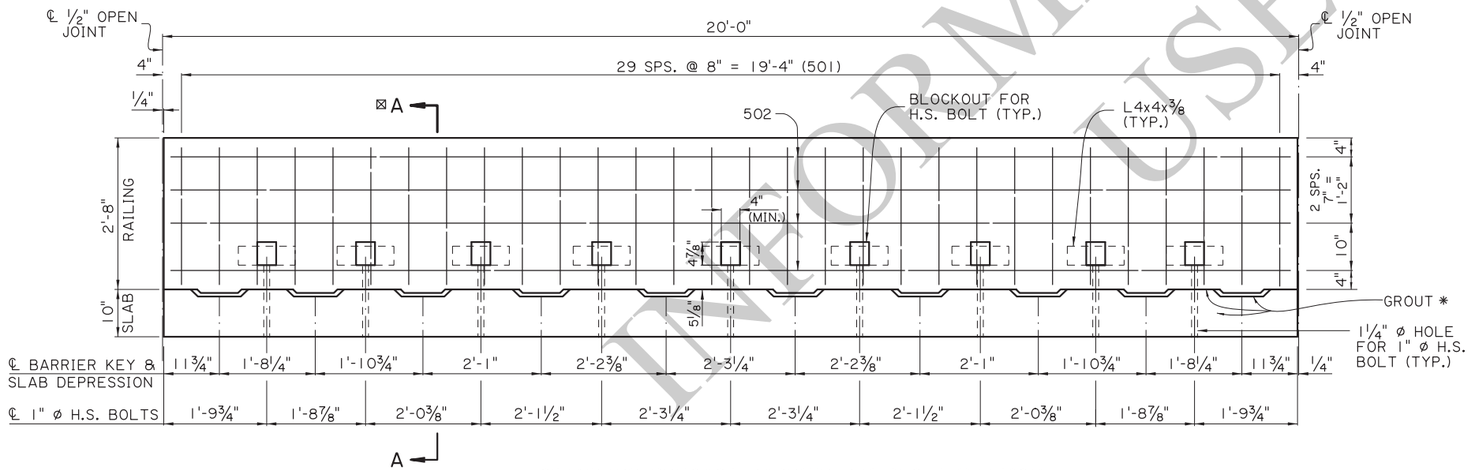

STANDARD PRECAST BARRIER RAILING ELEVATION

(SHOWING BARRIER RAILING ALONG BRIDGE SLAB)
SCALE: ¾" = 1'-0"

BARRIER KEY AND PANEL DEPRESSION DETAILS

FOR INFORMATIONAL USE

SHEET NUMBER

PARISH | CONTROL SECTION | STATE PROJECT

DESIGN B. DELATTE | CHECK J. NAKHLEH | DETAIL D. HYMEL | CHECK J. NAKHLEH | REVIEW | SERIES # 8 OF 11

APPROVED BY CHIEF ENGINEER: DATE: 12/10/2025

NO.	DATE	REVISION OR CHANGE ORDER DESCRIPTION	BY

STATE OF LOUISIANA

ALTERNATE SPAN (2 OF 4)
20'-0" PRECAST CONC. BARRIER
24'-0" CLEAR ROADWAY
90° CROSSING TWO WAY TANGENT

PSS-90-24-20SL

DOTD LOUISIANA DEPARTMENT OF TRANSPORTATION & DEVELOPMENT

STANDARD PLAN

11/19/2025 08:2.

IP_PWP:d1246419\SS9024altspan2(LRFD).dgn

11/19/2025 08:2

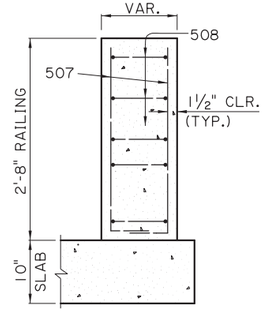

TAPER

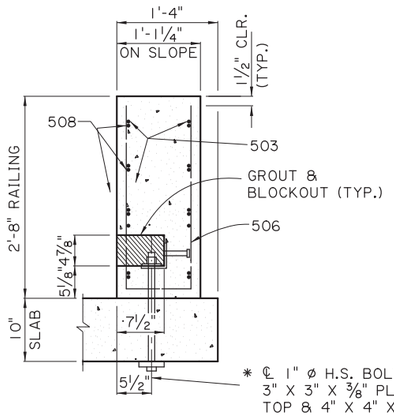

100% TRANSITION

* ℄ 1" ø H.S. BOLT, AND 3" X 3" X ⅜" PLATE WASHER TOP & 4" X 4" X ⅞" PLATE WASHER BOTTOM, AND ONE HEAVY HEX NUT (TYP.).

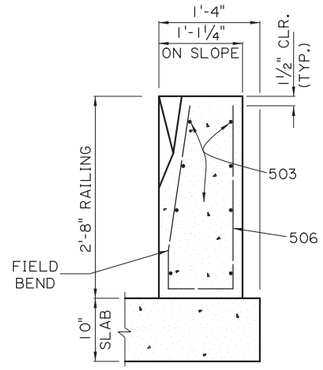

50% TRANSITION

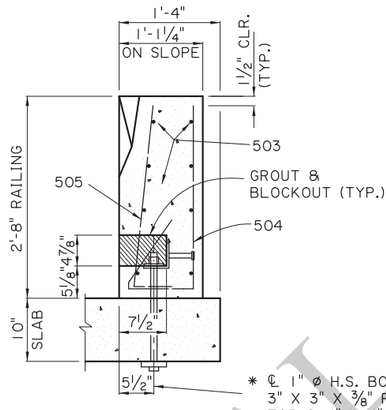

50% TRANSITION

* ℄ 1" ø H.S. BOLT, AND 3" X 3" X ⅜" PLATE WASHER TOP & 4" X 4" X ⅞" PLATE WASHER BOTTOM, AND ONE HEAVY HEX NUT (TYP.).

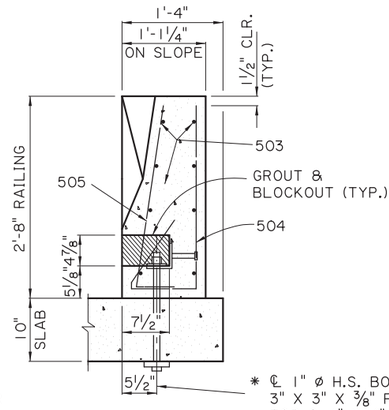

BEGIN TRANSITION

* ℄ 1" ø H.S. BOLT, AND 3" X 3" X ⅜" PLATE WASHER TOP & 4" X 4" X ⅞" PLATE WASHER BOTTOM, AND ONE HEAVY HEX NUT (TYP.).

BARRIER RAILING TRANSITION SECTIONS

SCALE: 1" = 1'-0"

* 1" ø THREADED STUD OF EQUAL STRENGTH, WITH 2 NUTS & 2 WASHERS, MAY BE USED IN LIEU OF H.S. BOLTS.

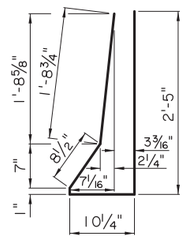

501
(2½" ø PIN)

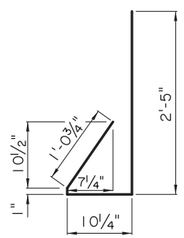

504
(2½" ø PIN)

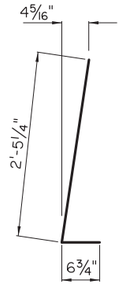

505
(2½" ø PIN)

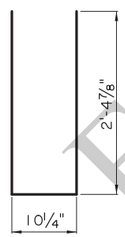

506
(2½" ø PIN)

507
(2½" ø PIN)

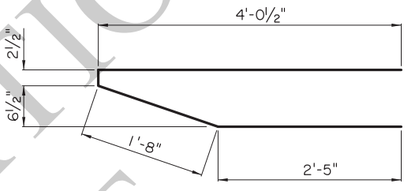

508
(2½" ø PIN)

NOTES:

1) ALL BARRIER RAIL SURFACES ARE TO RECEIVE A CLASS 3 SPECIAL FINISH.

2) ALL SURFACES OF THE BLOCKOUTS EXCEPT THE BOTTOM MAY BE TAPERED AND ALL CORNERS MAY BE ROUNDED TO A RADIUS TO ALLOW FOR EASY REMOVAL OF PLUGS OR FORMS. AFTER PLACING AND TIGHTENING THE ANCHOR BOLTS, THE BLOCKOUTS SHALL BE FILLED WITH AN APPROVED NON-SHRINK GROUT FROM AML AND TROWELED TO THE REQUIRED FINISH AND TO THE SATISFACTION OF THE ENGINEER.

3) AFTER BARRIER IS PLACED AND ALIGNED, ALL GAPS UNDER BARRIER AND TOP OF SLAB SHALL BE FILLED WITH NON-SHRINK GROUT FROM AML AND ALLOWED TO SET PRIOR TO TIGHTENING OF BOLTS. IT IS IMPORTANT TO FILL ALL VOIDS AND GAPS UNDER THE BARRIER TO ENSURE EVEN BEARING ON DECK WHEN THE ANCHOR BOLTS ARE LOADED.

4) ALL 1" ø BOLTS SHALL BE HIGH STRENGTH A325 OR APPROVED EQUAL. BOLT, NUT & WASHER TO BE GALVANIZED AS PER ASTM A-153. BOLTS SHALL BE TENSIONED TO 36 KIPS, OR APPROXIMATELY 540 FOOT-LB. OF TORQUE (LUBRICATED CONNECTION).

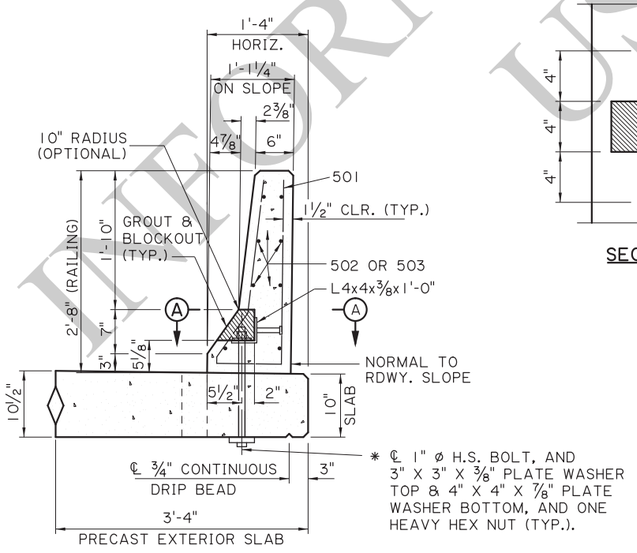

* ℄ 1" ø H.S. BOLT, AND 3" X 3" X ⅜" PLATE WASHER TOP & 4" X 4" X ⅞" PLATE WASHER BOTTOM, AND ONE HEAVY HEX NUT (TYP.).

SECTION A-A
SCALE: 1" = 1'-0"

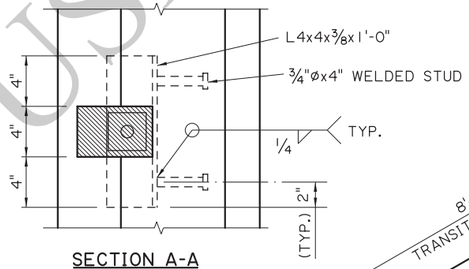

SECTION A-A

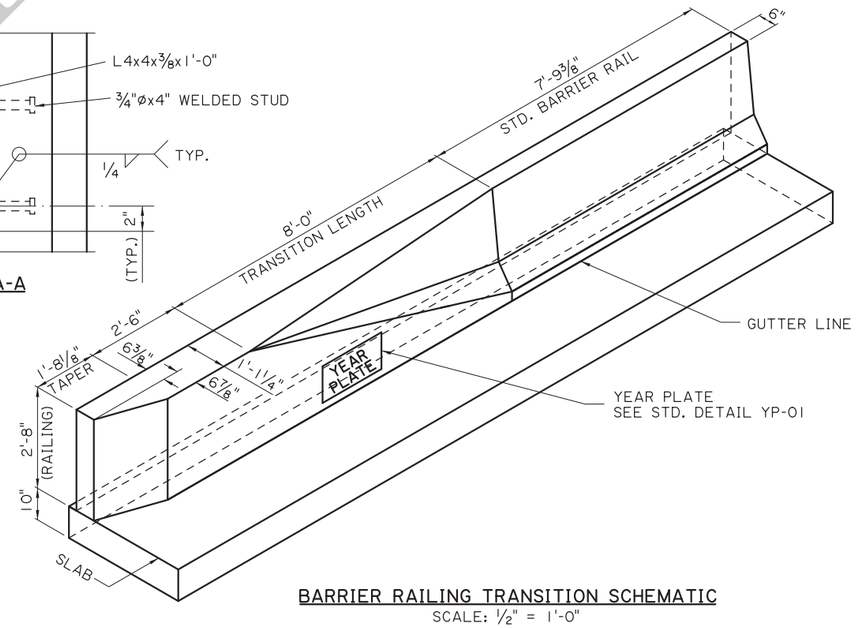

BARRIER RAILING TRANSITION SCHEMATIC
SCALE: ½" = 1'-0"

FOR INFORMATIONAL USE

SHEET NUMBER	
PARISH	
CONTROL SECTION	
STATE PROJECT	
DESIGN B. DELATTE	DETAIL D. HYMEL
CHECK J. NAKHLEH	CHECK J. NAKHLEH
REVIEW	SERIES # 9 OF 11

APPROVED BY CHIEF ENGINEER: DATE: 12/10/2025

NO.	DATE	REVISION OR CHANGE ORDER DESCRIPTION	BY

STATE OF LOUISIANA — DEPARTMENT OF TRANSPORTATION AND DEVELOPMENT

ALTERNATE SPAN (3 OF 4)
20'-0" PRECAST CONC. BARRIER

24'-0" CLEAR ROADWAY
90° CROSSING TWO WAY TANGENT

PSS-90-24-20SL

DOTD
LOUISIANA DEPARTMENT OF TRANSPORTATION & DEVELOPMENT

STANDARD PLAN

IP_PWP:d1246419\SS9024altspan3(LRFD).dgn

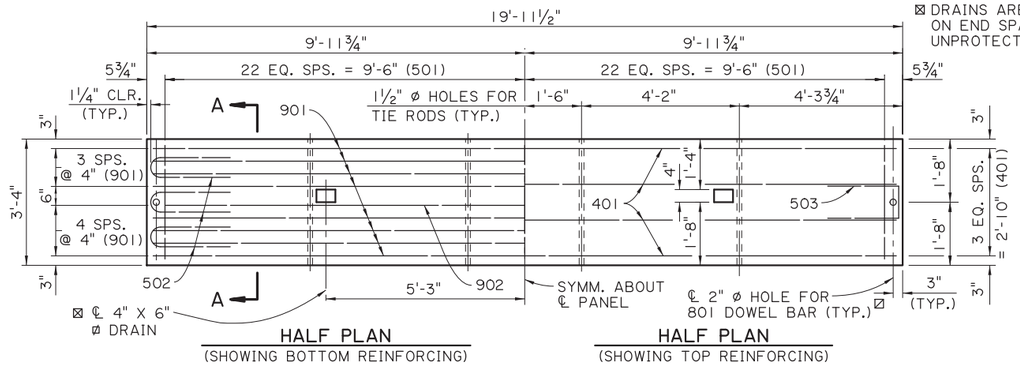

HALF PLAN
(SHOWING BOTTOM REINFORCING)

HALF PLAN
(SHOWING TOP REINFORCING)

EXTERIOR UNIT
SCALE : ½" = 1'-0"

⊠ DRAINS ARE NOT REQUIRED ON END SPANS OVER UNPROTECTED SLOPES.

☑ HOLES ARE OPTIONAL AT EXPANSION ENDS.

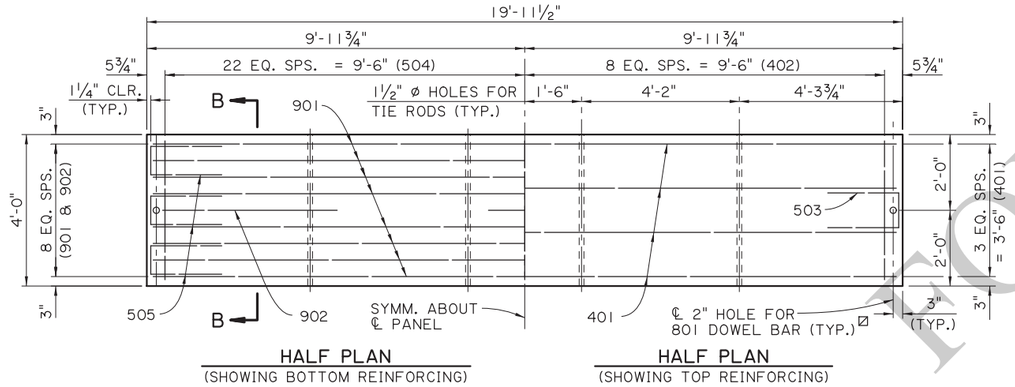

HALF PLAN
(SHOWING BOTTOM REINFORCING)

HALF PLAN
(SHOWING TOP REINFORCING)

INTERIOR UNIT
SCALE : ½" = 1'-0"

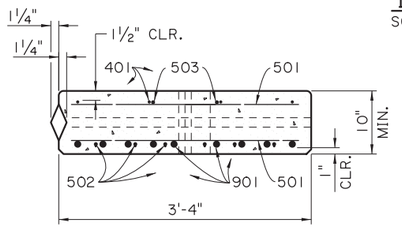

SECTION A-A
EXTERIOR UNIT
SCALE : 1" = 1'-0"

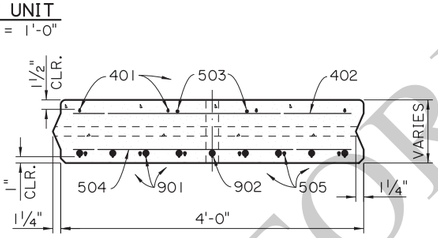

SECTION B-B
INTERIOR UNIT
SCALE : 1" = 1'-0"

NOTE:
FOR EACH SPAN. ONE EXTERIOR UNIT WILL HAVE A TONGUE AND ONE WILL HAVE A GROOVE.

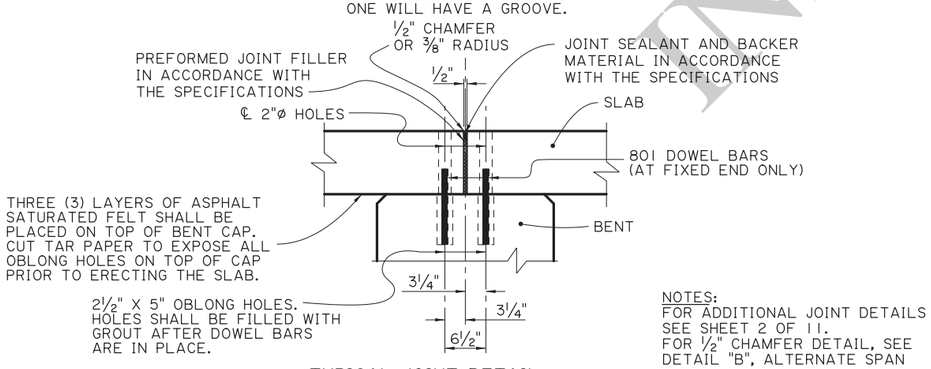

TYPICAL JOINT DETAIL
SCALE : 1" = 1'-0"

NOTES:
FOR ADDITIONAL JOINT DETAILS SEE SHEET 2 OF 11.
FOR ½" CHAMFER DETAIL, SEE DETAIL "B", ALTERNATE SPAN 1 OF 4.

ALTERNATE SPAN NOTES:

DESIGN SPECIFICATIONS: AASHTO LRFD BRIDGE DESIGN SPECIFICATIONS, 4th EDITION, WITH 2008 & 2009 INTERIMS.

DESIGN LOAD: THE BRIDGE DECK IS DESIGNED FOR A FUTURE WEARING COURSE OF 19 PSF. THE LIVE LOAD IS HL-93. AND LADV-11 (LOUISIANA DESIGN VEHICLE LIVE LOAD 2011).

STRUCTURAL CONCRETE: ALL CONCRETE SHALL BE CLASS P1. THE BRIDGE RAIL CONCRETE SHALL BE CLASS A1 IF RAIL IS CAST IN PLACE. STEEL SIDE FORMS AND STEEL OR CONCRETE BOTTOM FORMS SHALL BE USED FOR PRECAST COMPONENTS. EXPOSED EDGES SHALL HAVE A ¾" CHAMFER, UNLESS SPECIFIED OTHERWISE. ALL SURFACES SHALL RECEIVE A CLASS 1 ORDINARY SURFACE FINISH UPON REMOVAL OF THE FORMS. THE FINAL FINISH SHALL BE A TINE FINISH IN ACCORDANCE WITH THE SPECIFICATIONS.

REINFORCING STEEL: ALL REINFORCING STEEL SHALL BE GRADE 60. DIMENSIONS RELATING TO FABRICATION ARE OUT TO OUT OF BARS, UNLESS SPECIFIED OTHERWISE. DIMENSIONS RELATING TO SPACING ARE TO BAR CENTERS, UNLESS SPECIFIED OTHERWISE. ALL REINFORCING BARS SHALL BE PLACED TO PROVIDE A MINIMUMUM COVER OF 1" FROM THE DRAIN HOLES. REINFORCING STEEL MAY BE TACK WELDED FOR A DISTANCE OF NOT MORE THAN 4'-0" FROM EACH END OF UNIT. NO OTHER WELDING SHALL BE PERMITTED.

MISCELLANEOUS STEEL: HIGH STRENGTH BOLTS SHALL CONFORM TO ASTM DESIGNATION A-325. PRESTRESSING STRANDS SHALL CONFORM TO ASTM DESIGNATION A-416, GRADE 270. PLATES, TIE RODS, AND DRIFT BOLTS SHALL CONFORM TO ASTM DESIGNATION A709, GRADE 36. STEEL SPECIFIED TO BE ZINC COATED SHALL BE IN CONFORMANCE WITH ASTM DESIGNATION A-123.

GROUT: THE GROUT SHALL BE AN APPROVED FLOWABLE NON-SHRINK GROUT LISTED ON THE AML. THE GROUT SHALL BE TESTED FOR ACCEPTANCE PRIOR TO USAGE. THE GROUT SHALL ATTAIN A MINIMUM COMPRESSIVE STRENGTH OF 3500 PSI PRIOR TO LOADING SLABS. SURFACES SHALL BE THOROUGHLY SATURATED WITH WATER BY FLOODING THE HOLES FOR APPROXIMATELY FIVE (5) MINUTES IMMEDIATELY BEFORE THE GROUT IS PLACED. ONLY POTABLE WATER SHALL BE USED FOR SATURATION AND MIXING PURPOSES.

PATCHING MATERIAL: THE PATCHING MATERIAL SHALL BE AN APPROVED PATCHING MATERIAL FOR PRECAST OR PRESTREESED CONCRETE PRODUCTS LISTED ON AML. SURFACE PREPARATION, MIXING AND PLACMENT SHALL BE IN ACCORDANCE WITH THE MANUFACTURERS' RECOMMENDATIONS. ONLY POTABLE WATER SHALL BE USED FOR SATURATION AND MIXING PURPOSES.

PRECAST UNITS: THE PLANS FOR AN ONGOING OPERATION OF FABRICATION FACILITIES SHALL BE APPROVED BY THE DEPARTMENT. EACH UNIT SHALL HAVE "LIVE LOAD HL-93 & LADV-11", THE FABRICATOR'S MARK, AND UNIQUE NUMBER, MEETING THE APPROVAL OF THE ENGINEER STAMPED OR INSCRIBED IN THE PLASTIC CONCRETE. PRECAST UNITS MAY BE CAST WITH OR WITHOUT CAMBER. IF CAMBER IS PROVIDED IT SHALL NOT EXCEED ¼" AT THE CENTERLINE OF SPAN. ALL UNITS SHALL BE HELD AT THE PLANT FOR A MINIMUM OF TEN(10) DAYS AFTER CASTING. THE CONCRETE SHALL REACH A MINIMUM STRENGTH OF 3,000 PSI BEFORE HANDLING IS PERMITTED. THE LIFTING INSERTS SHALL BE 1", TYPE S INSERTS AS MANUFACTURED BY DAYTON-SUPERIOR CORPORATION OR AN APPROVED EQUAL. EACH INSERT SHALL HAVE A MINIMUM LOAD CAPACITY OF 10,000 POUNDS . FOUR(4) INSERTS WITH 1" ø X 5" LONG COIL BOLTS SHALL BE PLACED IN THE TOP OF THE UNIT AND LOCATED 1'-3" FROM ITS ENDS AND 1'-0" FROM ITS EDGES. INSERT HOLES SHALL BE GROUT FILLED AFTER PLACEMENT OF UNIT. AT THE CONTRACTOR'S OPTION A SLING OF SUFFICIENT CAPACITY MAY BE USED FOR LIFTING, PROVIDED THE SAME PICKUP LOCATION FROM THE ENDS ARE USED. FABRICATION TOLERANCES SHALL BE AS FOLLOWS:

UNIT DEPTH	± 3/16"
UNIT LENGTH	+ ⅛" AND -½"
OVERALL SPAN WIDTH	± 2"

ALL PRECAST UNITS IN EACH BRIDGE SPAN SHALL BE MATCH CAST IN THE SAME CASTING BED TO ENSURE A PROPER FIT DURING INSTALLATION.

GUARDRAIL: CONFORM TO PROJECT PLANS AND GUARD RAIL STANDARD PLANS.

PAYMENT: ALL WORK WILL BE PAID FOR UNDER THE DESIGNATED BRIDGE SUPERSTRUCTURE AND SUBSTRUCTURE PAY ITEM AND IN ACCORDANCE WITH THE SPECIFICATIONS.

ESTIMATED QUANTITIES (ONE EXTERIOR UNIT)				
BAR	NO.	UNIT LENGTH	TOTAL LENGTH	LOCATION
901	8	19'-9"	158'-0"	LONGIT. BOT. OF SLAB
902	1	19'-1"	19'-1"	LONGIT. BOT. OF SLAB
TOTAL NO. 9 BARS = 177'-1" = 602 LBS.				
801	1	1'-0"	1'-0"	DOWELS
TOTAL NO. 8 BARS = 1'-0" = 3 LBS.				
501	90	3'-0"	270'-0"	TRANS. TOP & BOT. OF SLAB
502	6	4'-6"	27'-0"	BOT. END OF SLAB
503	2	4'-8"	9'-4"	TOP END OF SLAB
TOTAL NO. 5 BARS = 306'-4" = 320 LBS.				
401	4	19'-9"	79'-0"	LONGIT. TOP OF SLAB
TOTAL NO. 4 BARS = 79'-0" = 53 LBS.				
DEFORMED REINFORCING STEEL = 977 LBS.				
⊙ CLASS P1 CONCRETE = 2.05 CU. YDS.				
CONCRETE RAILING (PER SPAN) = 40.00 LIN. FT.				

ESTIMATED QUANTITIES (ONE INTERIOR UNIT)				
BAR	NO.	UNIT LENGTH	TOTAL LENGTH	LOCATION
901	8	19'-9"	158'-0"	LONGIT. BOT. OF SLAB
902	1	19'-1"	19'-1"	LONGIT. BOT. OF SLAB
TOTAL NO. 9 BARS = 177'-1" = 602 LBS.				
801	1	1'-0"	1'-0"	DOWELS
TOTAL NO. 8 BARS = 1'-0" = 3 LBS.				
503	2	4'-8"	9'-4"	TOP END OF SLAB
504	44	3'-8"	161'-4"	TRANS. BOT. OF SLAB
505	6	4'-6"	27'-0"	BOT. END OF SLAB
TOTAL NO. 5 BARS = 197'-8" = 206 LBS.				
401	4	19'-9"	79'-0"	LONGIT. TOP OF SLAB
402	17	3'-8"	62'-4"	TRANS. TOP OF SLAB
TOTAL NO. 4 BARS = 141'-4" = 94 LBS.				
DEFORMED REINFORCING STEEL = 905 LBS.				
⊙ CLASS P1 CONCRETE = 2.46 CU. YDS.				

⊙ BASED ON A 10" SLAB THICKNESS

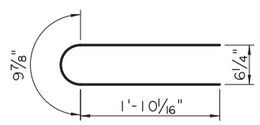

502
5 " ø PIN

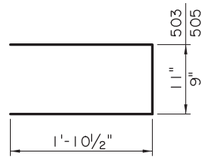

503 & 505
2½" ø PIN

AS-DESIGNED RATING		
VEHICLE	RATING FACTOR	NOTES
HL-93 (INV)	1.309	——
HL-93 (OPR)	1.697	——
LADV-11 (INV)	1.007	MAGNIFICATION FACTOR = 1.3

SHEET NUMBER

PARISH | CONTROL SECTION | STATE PROJECT

DESIGN J. NAKHLEH | CHECK B. DELATTE | DETAIL D. HYMEL | CHECK J. NAKHLEH | REVIEW | SERIES # 10 OF 11

APPROVED BY CHIEF ENGINEER:

DATE: 12/10/2025

NO. | DATE | REVISION OR CHANGE ORDER DESCRIPTION | BY

STATE OF LOUISIANA — DEPARTMENT OF TRANSPORTATION AND DEVELOPMENT

ALTERNATE SPAN (4 OF 4)
20'-0" PRECAST CONC. SLAB UNIT
24'-0" CLEAR ROADWAY
90° CROSSING TWO WAY TANGENT

PSS-90-24-20SL

DOTD
LOUISIANA DEPARTMENT OF TRANSPORTATION & DEVELOPMENT

STANDARD PLAN

FOR INFORMATIONAL PURPOSES ONLY

11/24/2025 15:5.
IP_PWP:d1246419\SS9024altspan4(LRFD).dgn

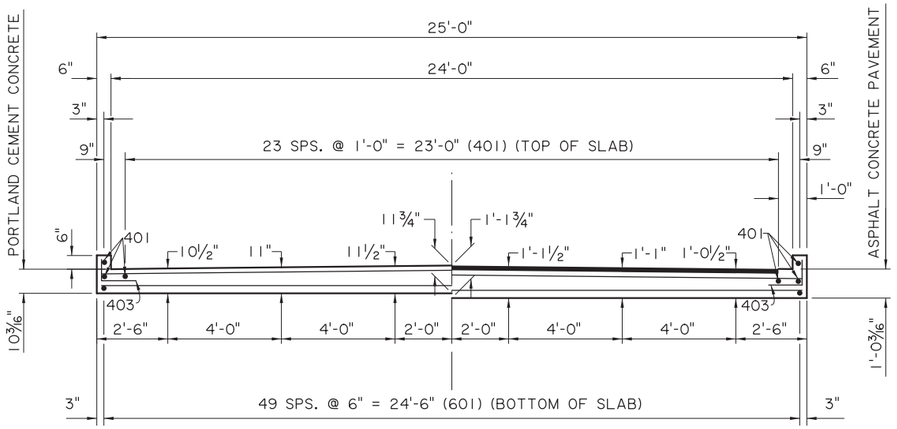

SECTION A-A
SCALE 3/8" = 1'-0"

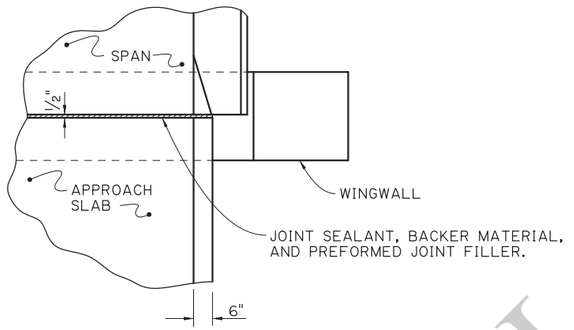

JOINT DETAIL
N.T.S.

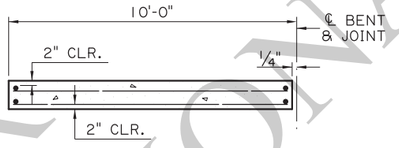

(FOR PORTLAND CEMENT CONCRETE ROADWAY PAVEMENT)

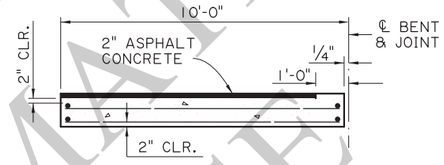

(FOR ASPHALT CONCRETE ROADWAY PAVEMENT)

SECTION ALONG ℄ ROADWAY
SCALE : ¼" = 1'-0"

ESTIMATED QUANTITIES (ONE SLAB)				
BAR	NO.	UNIT LENGTH	TOTAL LENGTH	LOCATION
801	6	1'-0"	6'-0"	DOWELS
TOTAL NO. 8 BARS = 6'-0" = 16 LBS.				
601	50	9'-7"	479'-2"	LONGIT. BOT. OF SLAB
602	20	24'-8"	493'-4"	TRANSV. BOT. OF SLAB
TOTAL NO. 6 BARS = 972'-6" = 1,461 LBS.				
401	28	9'-7"	268'-4"	LONGIT. TOP OF SLAB & CURB
402	11	24'-8"	271'-4"	TRANSV. TOP OF SLAB
403	14	1'-10"	25'-8"	DOWELS IN CURB
TOTAL NO. 4 BARS = 565'-4" = 378 LBS.				
⊙ TOTAL DEFORMED REINFORCING STEEL = 1,855 LBS.				
CONCRETE APPROACH SLAB = 27.78 SQ. YDS.				
⊙☑ ASPHALT CONCRETE = 2.5 TONS				
⊙☑ SAW CUT & SEAL = 23 LIN. FT.				

⊙ TO BE PAID FOR UNDER ITEM CONCRETE APPROACH SLABS.

☑ REQUIRED WHEN APPROACH SLAB IS ADJACENT TO ASPHALT CONCRETE PAVEMENT.

APPROACH SLAB NOTES:

DESIGN SPECIFICATIONS: AASHTO LRFD BRIDGE DESIGN SPECIFICATIONS 4th EDITION, WITH 2008 & 2009 INTERIMS.
STRUCTURAL CONCRETE: ALL CONCRETE SHALL BE CLASS A1. EXPOSED EDGES SHALL HAVE A ¾" CHAMFER, UNLESS SPECIFIED OTHERWISE.
ASPHALT CONCRETE: TO BE THE SAME TYPE AS THE ASPHALT CONCRETE USED FOR THE APPROACH ROADWAY PAVEMENT OR OVERLAY.
REINFORCING STEEL: ALL REINFORCING STEEL SHALL BE GRADE 60. DIMENSIONS RELATING TO THE FABRICATION ARE OUT-TO-OUT OF BARS, UNLESS SPECIFIED OTHERWISE. DIMENSIONS RELATING TO SPACING ARE TO BAR CENTERS.
BEDDING MATERIAL: FOR DETAILS OF BEDDING MATERIAL AND UNDERDRAINS. SEE APPROACH SLAB STANDARD DETAILS.
SAWING & SEALING: THE ASPHALT CONCRETE SHALL BE SAW CUT AT THE END OF THE CONCRETE APPROACH SLAB THE ENTIRE ROADWAY WIDTH AND SEALED WHICH WILL BE PAID FOR UNDER THE DESIGNATED ROADWAY PAY ITEM.
PAYMENT: ALL OTHER WORK WILL BE PAID FOR UNDER THE DESIGNATED BRIDGE CONCRETE APPROACH SLAB PAY ITEM AND IN ACCORDANCE WITH THE SPECIFICATIONS.

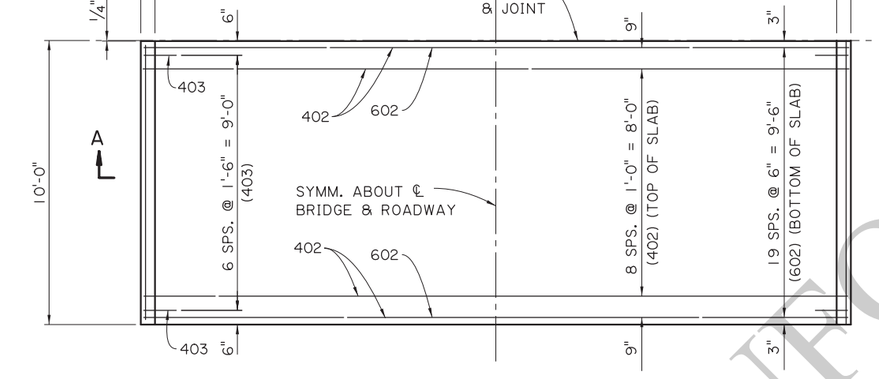

PLAN
SCALE 3/8" = 1'-0"

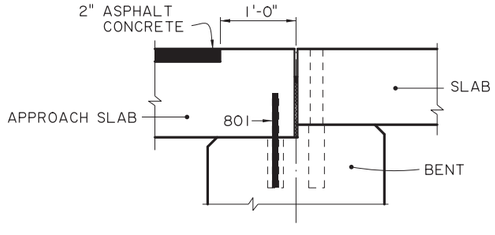

DETAIL A
SCALE : 1" = 1'-0"
(ASPHALT CONCRETE PAVEMENT OPTION)

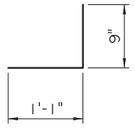

403
2" ø PIN

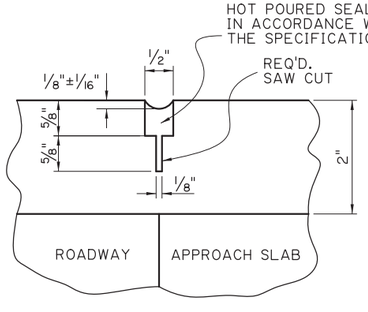

SAWING & SEALING JOINT DETAIL
N.T.S.

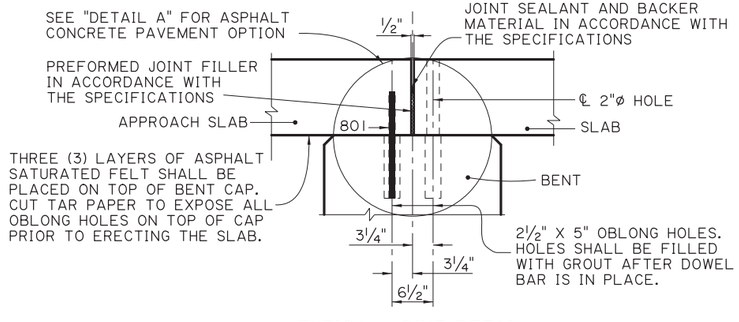

TYPICAL JOINT DETAIL
SCALE : 1" = 1'-0"

NOTE: FOR ADDITIONAL JOINT DETAILS SEE SHEET 2 OF 11

INFORMATIONAL PURPOSES ONLY NOT FOR CONSTRUCTION

SHEET NUMBER
PARISH | CONTROL SECTION | STATE PROJECT
DESIGN B. DELATTE | CHECK J. NAKHLEH | DETAIL D. HYMEL | CHECK J. NAKHLEH | REVIEW | SERIES # 11 OF 11
APPROVED BY CHIEF ENGINEER: DATE: 12/10/2025
NO. | DATE | REVISION OR CHANGE ORDER DESCRIPTION | BY

ALTERNATE APPROACH SLAB
10'-0" CAST-IN-PLACE
24'-0" CLEAR ROADWAY
90° CROSSING TWO WAY TANGENT
PSS-90-24-20SL

STATE OF LOUISIANA DEPARTMENT OF TRANSPORTATION AND DEVELOPMENT
DOTD LOUISIANA DEPARTMENT OF TRANSPORTATION & DEVELOPMENT
STANDARD PLAN

11/19/2025 13:5
IP_PWP:d1246419\SS9024altaprslab(LRFD).dgn

11/24/2025 16:2.

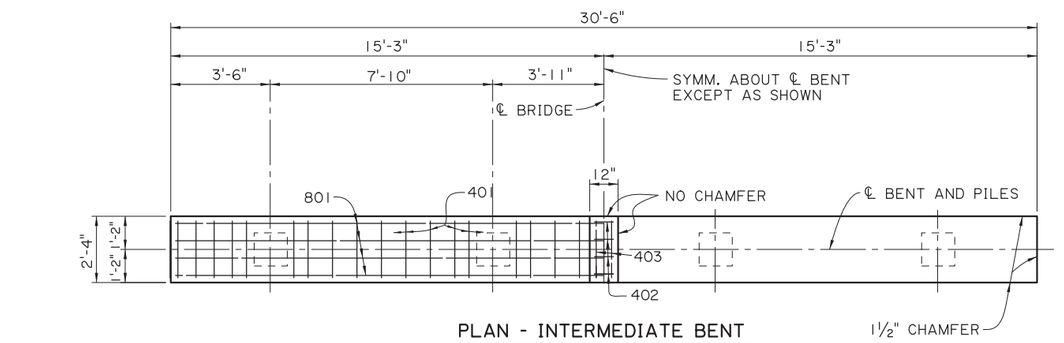

PLAN - INTERMEDIATE BENT

SCALE ⅜" = 1'-0"

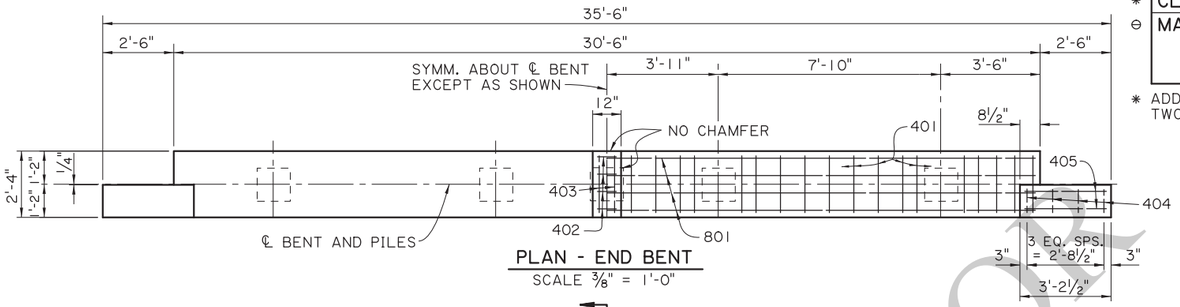

PLAN - END BENT

SCALE ⅜" = 1'-0"

B

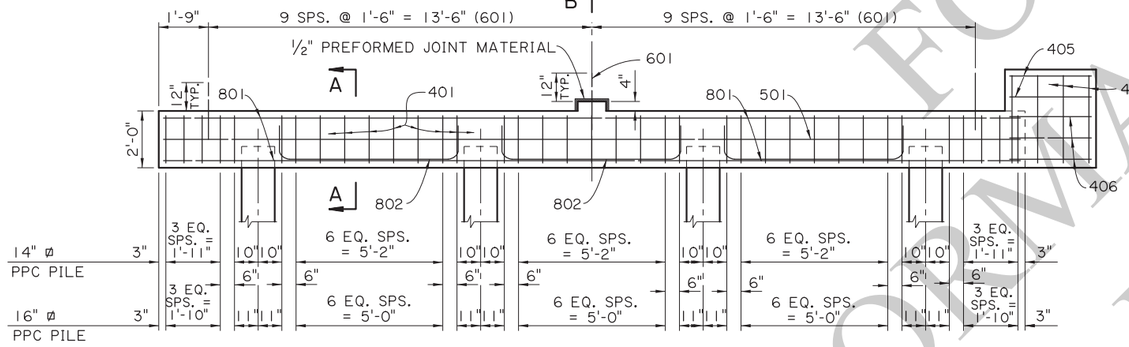

HALF ELEVATION - INTERMEDIATE BENT

SCALE ⅜" = 1'-0"

B

HALF ELEVATION - END BENT

SCALE ⅜" = 1'-0"

ESTIMATED QUANTITIES (ONE INTER. BENT)				
BAR	NO.	UNIT LENGTH	TOTAL LENGTH	LOCATION
801	6	30'-2"	181'-0"	LONGIT. IN CAP
802	6	8'-8"	52'-0"	LONGIT. IN CAP BTW. PILES
TOTAL NO. 8 BARS = 233'-0" = 622 LBS.				
601	19	2'-0"	38'-0"	DOWELS
TOTAL NO. 6 BARS = 38'-0" = 57 LBS.				
501	2	30'-2"	60'-4"	LONGIT. IN CAP
TOTAL NO. 5 BARS = 60'-4" = 63 LBS.				
401	37	8'-2"	302'-2"	STIRRUPS IN CAP
402	4	3'-4"	13'-4"	STIRRUPS IN RISER
403	2	2'-0"	4'-0"	LONGIT. IN RISER
TOTAL NO. 4 BARS = 319'-6" = 213 LBS.				
DEFORMED REINFORCING STEEL = 955 LBS.				
* CLASS A1 CONCRETE = 5.10 CU. YDS.				
⊖ MAX. PILE LOAD: SERVICE DEAD LOAD = 23 TONS SERVICE LIVE LOAD = 36 TONS FACTORED TOTAL LOAD = 81 TONS				

* ADD 57 LBS. OF REINFORCING STEEL (19-601 DOWELS) WHEN TWO FIXED ENDS OCCUR ON THE SAME BENT.

ESTIMATED QUANTITIES (ONE END BENT)				
BAR	NO.	UNIT LENGTH	TOTAL LENGTH	LOCATION
801	6	30'-2"	181'-0"	LONGIT. IN CAP
802	6	8'-8"	52'-0"	LONGIT. IN CAP BTW. PILES
TOTAL NO. 8 BARS = 233'-0" = 622 LBS.				
601	19	2'-0"	38'-0"	DOWELS
TOTAL NO. 6 BARS = 38'-0" = 57 LBS.				
501	2	30'-2"	60'-4"	LONGIT. IN CAP
TOTAL NO. 5 BARS = 60'-4" = 64 LBS.				
401	37	8'-2"	302'-2"	STIRRUPS IN CAP
402	4	3'-4"	13'-4"	STIRRUPS IN RISER
403	2	2'-0"	4'-0"	LONGIT. IN RISER
404	8	8'-9"	70'-0"	STIRRUPS IN WINGWALL
405	8	2'-10"	22'-8"	LONGIT. IN WINGWALL
406	12	4'-0"	48'-0"	LONGIT. IN WINGWALL
TOTAL NO. 4 BARS = 460'-2" = 307 LBS.				
DEFORMED REINFORCING STEEL = 1050 LBS.				
CLASS A1 CONCRETE = 5.92 CU. YDS.				
⊖ MAX. PILE LOAD: SERVICE DEAD LOAD = 23 TONS SERVICE LIVE LOAD = 36 TONS FACTORED TOTAL LOAD = 81 TONS				

⊖16" ø PPC PILES USED FOR ESTIMATING PURPOSES ONLY. (ADD 0.04 CU. YDS. OF CLASS A1 CONCRETE PER BENT WHEN 14" ø PPC PILES ARE USED.)

SECTION A-A

SCALE: ¾" = 1'-0"

SECTION B-B

SCALE: ¾" = 1'-0"

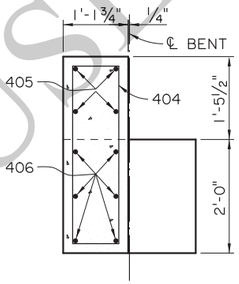

END ELEVATION

SCALE ¾" = 1'-0"

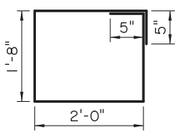

401

2" ø PIN

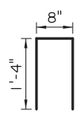

402

2" ø PIN

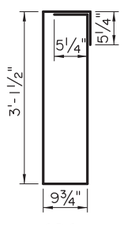

404

2" ø PIN

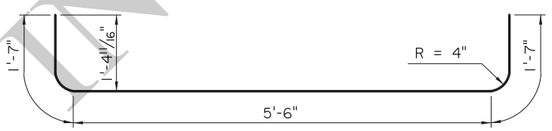

802

6" ø PIN

AS-DESIGNED RATING		
VEHICLE	RATING FACTOR	NOTES
HL-93 (INV)	1.417	——
HL-93 (OPR)	1.836	——
LADV-11 (INV)	1.090	MAGNIFICATION FACTOR = 1.3

NOTES:

DESIGN SPECIFICATIONS: AASHTO LRFD BRIDGE DESIGN SPECIFICATIONS, 4th EDITION, WITH 2008 & 2009 INTERIMS.

DESIGN LOAD: LIVE LOAD IS HL-93, AND LADV-11 (LOUISIANA DESIGN VEHICLE LIVE LOAD 2011).

STRUCTURAL CONCRETE: ALL CONCRETE SHALL BE CLASS A1. EXPOSED EDGES SHALL HAVE A ¾" CHAMFER UNLESS SPECIFIED OTHERWISE. ALL EXPOSED FACES OF WINGWALLS AND ENDS OF CAPS SHALL RECEIVE A SURFACE FINISH AS PER THE SPECIFICATIONS UNLESS SPECIFIED OTHERWISE.

REINFORCING STEEL: ALL REINFORCING SHALL BE GRADE 60. DIMENSIONS RELATING TO FABRICATION ARE OUT TO OUT OF BARS, UNLESS SPECIFIED OTHERWISE. DIMENSIONS RELATING TO SPACING ARE TO BAR CENTERS, UNLESS SPECIFIED OTHERWISE. DOWELS (601 BARS) SHALL BE PROVIDED AT ALL FIXED BEARINGS AND APPROACH SLAB BEARINGS. ALL EXPOSED ENDS OF DOWELS SHALL BE WRAPPED WITH TWO LAYERS OF 15 LB. ASPHALT SATURATED FELT. CLOSE FITTING TUBES OF COMPRESSIBLE MATERIAL NOT LESS THAN 3/16" THICK MAY BE SUBSTITUTED.

PRECAST CONCRETE PILES: CONFORM TO PILE STANDARD PLAN AND PROJECT PLANS FOR FABRICATION AND INSTALLATION. PILES WILL BE PAID FOR UNDER THE DESIGNATED PILE PAY ITEMS.

PREFORMED JOINT MATERIAL: PREFORMED JOINT MATERIAL SHALL BE IN ACCORDANCE WITH THE SPECIFICATIONS.

PAYMENT: ALL OTHER WORK WILL BE PAID FOR UNDER THE DESIGNATED BRIDGE SUPERSTRUCTURE AND SUBSTRUCTURE PAY ITEM AND IN ACCORDANCE WITH THE SPECIFICATIONS.

FOR INFORMATIONAL USE

SHEET NUMBER

PARISH | CONTROL SECTION | STATE PROJECT

DESIGN B. DELATTE | CHECK J. NAKHLEH | DETAIL D. HYMEL | CHECK J. NAKHLEH | REVIEW | SERIES # 1 OF 11

APPROVED BY CHIEF ENGINEER: DATE: 12/10/2025

NO.	DATE	REVISION OR CHANGE ORDER DESCRIPTION	BY

STATE OF LOUISIANA DEPARTMENT OF TRANSPORTATION AND DEVELOPMENT

BENTS REINFORCED CONCRETE PILE BENT

28'-0" CLEAR ROADWAY
90° CROSSING TWO WAY TANGENT

PSS-90-28-20SL

DOTD LOUISIANA DEPARTMENT OF TRANSPORTATION & DEVELOPMENT

STANDARD PLAN

IP_PWP:d1246420\SS9028bent(LRFD).dgn

11/20/2025 12:4

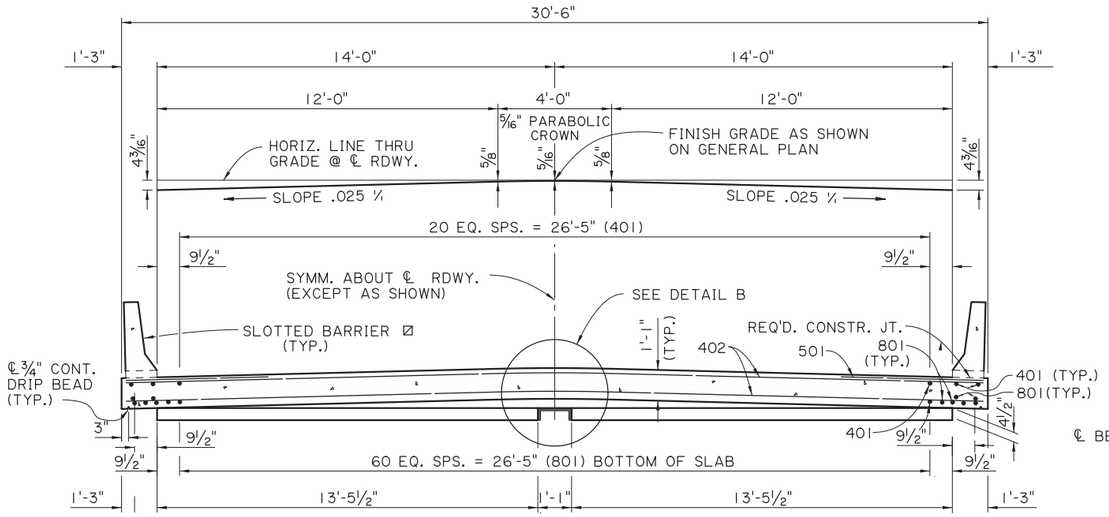

☒ STANDARD BARRIERS ARE REQUIRED ON END SPANS.

SECTION A-A
SCALE ⅜" = 1'-0"

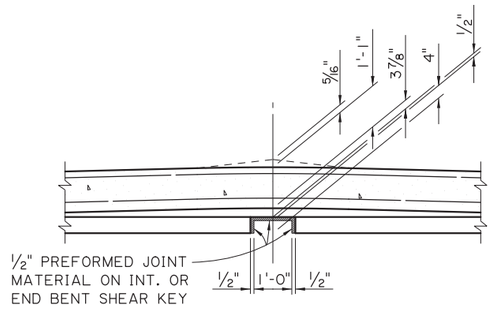

DETAIL B
SCALE : ½" = 1'-0"

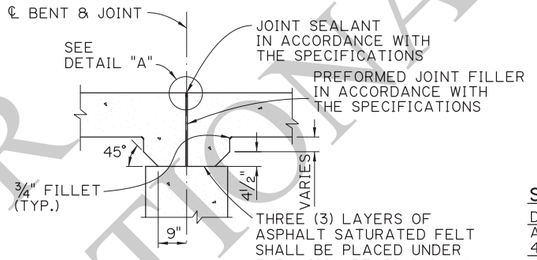

DETAIL SHOWING TYPICAL JOINT & HAUNCH
SCALE : ½" = 1'-0"

ESTIMATED QUANTITIES (ONE SPAN)				
BAR	NO.	UNIT LENGTH	TOTAL LENGTH	LOCATION
801	73	19'-7"	1429'-7"	LONGIT. BOT. OF SLAB
TOTAL NO. 8 BARS = 1429'-7" = 3817 LBS.				
501	56	5'-0"	280'-0"	TRANS. TOP OF SLAB
TOTAL NO. 5 BARS = 280'-0" = 292 LBS.				
401	25	19'-7"	489'-7"	LONGIT. TOP OF SLAB
402	56	30'-2"	1689'-4"	TRANS. TOP & BOT. OF SLAB
TOTAL NO. 4 BARS = 2178'-11" = 1456 LBS.				
TOTAL DEFORMED REINFORCING STEEL = 5565 LBS.				
CLASS A1 CONCRETE = 25.48 CU. YDS.				
CONCRETE RAILING (BARRIER TYPE) = 40.00 LIN. FT.				

AS-DESIGNED RATING		
VEHICLE	RATING FACTOR	NOTES
HL-93 (INV)	1.361	——
HL-93 (OPR)	1.764	——
LADV-11 (INV)	1.047	MAGNIFICATION FACTOR = 1.3

SPAN NOTES:

DESIGN SPECIFICATIONS:
AASHTO LRFD BRIDGE DESIGN SPECIFICATIONS, 4th EDITION, WITH 2008 & 2009 INTERIMS.

DESIGN LOADS:
THE BRIDGE DECK IS DESIGNED FOR A FUTURE WEARING COURSE OF 19 PSF. THE LIVE LOAD IS HL-93, AND LADV-11 (LOUISIANA DESIGN VEHICLE LIVE LOAD 2011).

STRUCTURAL CONCRETE:
ALL CONCRETE SHALL BE CLASS A1. EXPOSED EDGES SHALL HAVE A ¾" CHAMFER UNLESS SPECIFIED OTHERWISE. ALL BARRIER RAIL SURFACES ARE TO RECEIVE A CLASS 3 SPECIAL FINISH.

REINFORCING STEEL:
ALL REINFORCING SHALL BE GRADE 60; DIMENSIONS RELATING TO SPACING ARE TO BAR CENTERS, DIMENSIONS RELATING TO FABRICATION ARE OUT TO OUT OF BARS, UNLESS SPECIFIED OTHERWISE. ALL REINFORCING BARS SHALL BE PLACED TO PROVIDE A MINIMUM COVER OF ONE INCH FROM THE SURFACE OF THE DRAIN HOLES TO THE FACE OF THE BARS.

GUARD RAIL:
CONFORM TO PROJECT PLANS AND GUARD RAIL STANDARD PLANS.

PAYMENT:
ALL WORK WILL BE PAID FOR UNDER THE DESIGNATED BRIDGE SUPERSTRUCTURE AND SUBSTRUCTURE PAY ITEM AND IN ACCORDANCE WITH THE SPECIFICATIONS.

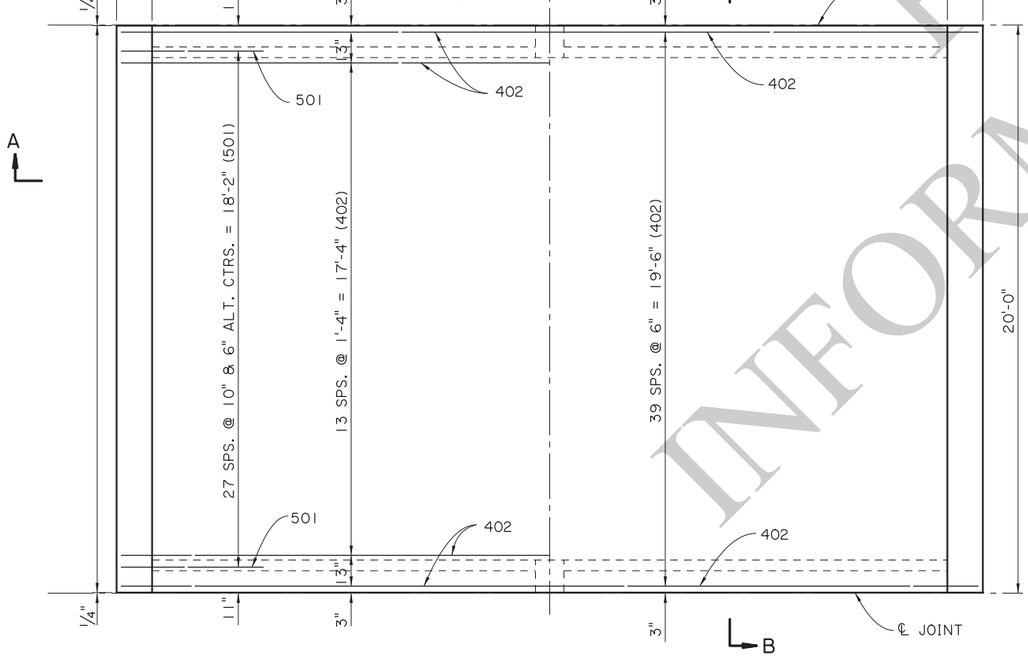

HALF SECTION
SHOWING SPACING OF TOP TRANS. REINF. STEEL
SCALE ⅜" = 1'-0"

HALF SECTION
SHOWING SPACING OF BOTTOM TRANS. REINF. STEEL
SCALE ⅜" = 1'-0"

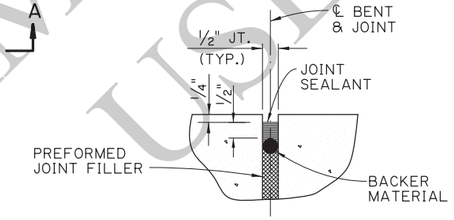

DETAIL "A"
N.T.S.

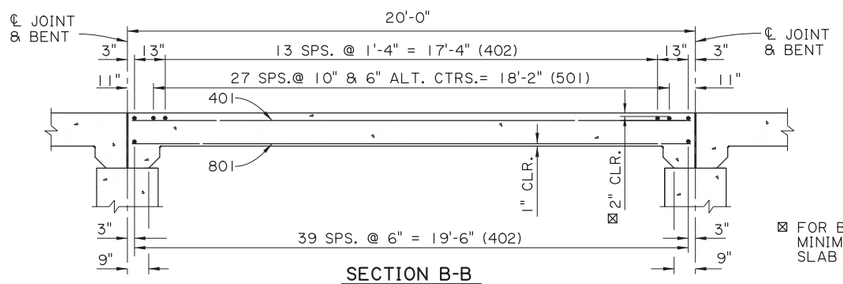

SECTION B-B
SCALE ⅜" = 1'-0"

☒ FOR BRIDGES IN DISTRICT 04 & 05, MINIMUM CONCRETE COVER IN TOP OF SLAB SHALL BE 2½".

FOR INFORMATIONAL USE

SHEET NUMBER

PARISH | CONTROL SECTION | STATE PROJECT

DESIGN J. NAKHLEH | CHECK B. DELATTE | DETAIL D. HYMEL | CHECK J. NAKHLEH | REVIEW | SERIES # 2 OF 11

APPROVED BY CHIEF ENGINEER: DATE: 12/10/2025

NO.	DATE	REVISION OR CHANGE ORDER DESCRIPTION	BY

SPAN (1 OF 2)
20'-0" CONCRETE SLAB SPAN

28'-0" CLEAR ROADWAY
90° CROSSING TWO WAY TANGENT

PSS-90-28-20SL

STATE OF LOUISIANA DEPARTMENT OF TRANSPORTATION & DEVELOPMENT

DOTD LOUISIANA DEPARTMENT OF TRANSPORTATION & DEVELOPMENT

STANDARD PLAN

IP_PWP:d1246420\SS9028span1(LRFD).dgn

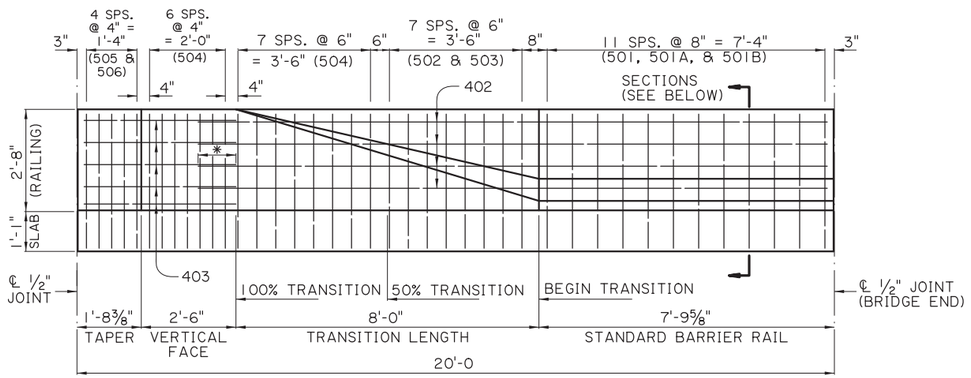

* 1'-0" (MIN.) SPLICE

BARRIER RAILING TRANSITION ELEVATION
(SHOWING BARRIER RAILING AT END OF BRIDGE)
SCALE: ½" = 1'-0"

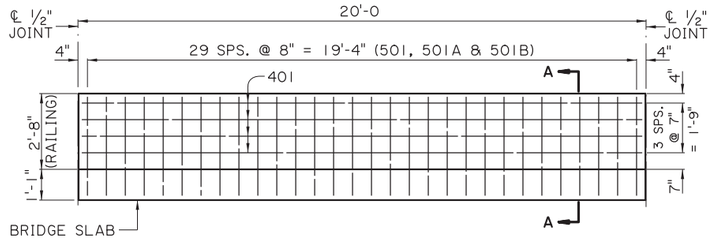

STANDARD BARRIER RAILING ELEVATION
(SHOWING BARRIER RAILING ALONG BRIDGE SLAB)
SCALE: ⅜" = 1'-0"

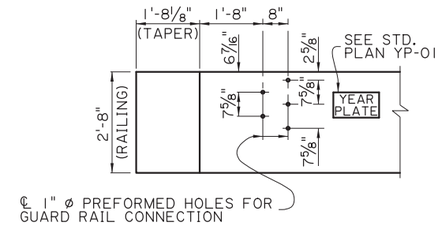

GUARD RAIL CONNECTION DETAIL
CONFORM TO GUARD RAIL STANDARD PLANS
SCALE: ½" = 1'-0"

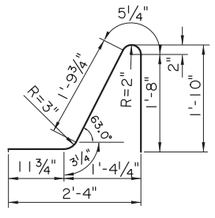

BARS 501A
(5'-2" LONG)

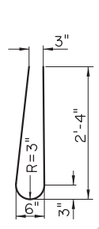

BARS 501
(4'-10" LONG)

BARS 501B
(2½" ø PIN)
(3'-0" LONG)

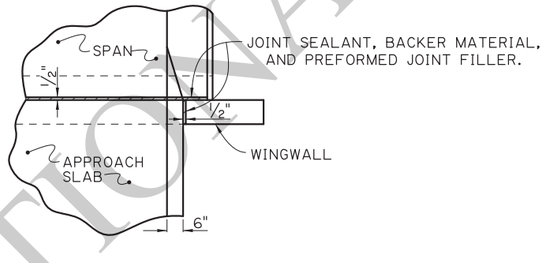

JOINT DETAIL
N.T.S.

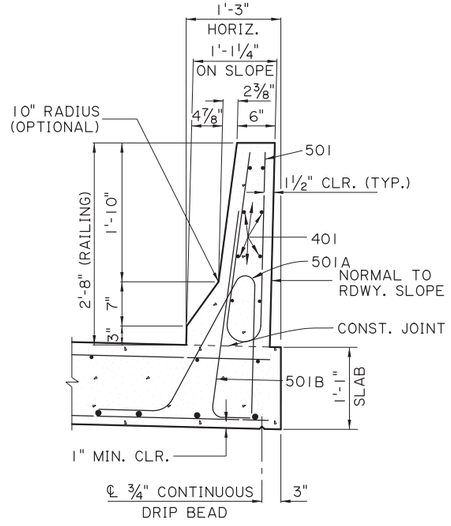

SECTION A-A
SCALE: 1" = 1'-0"

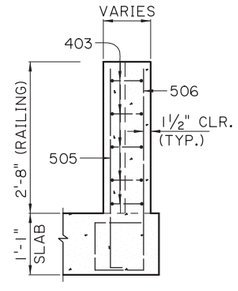

TAPER

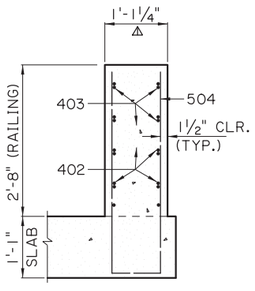

100 % TRANSITION

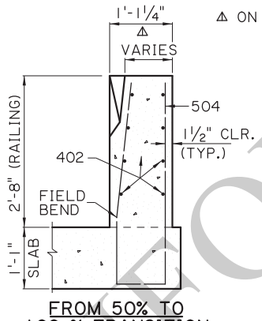

FROM 50% TO 100 % TRANSITION

⚠ ON SLOPE

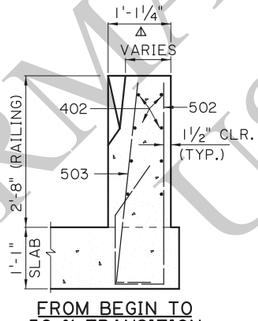

FROM BEGIN TO 50 % TRANSITION

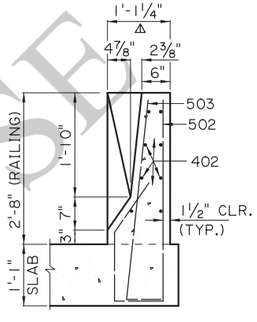

BEGIN TRANSITION

BARRIER RAILING TRANSITION SECTIONS
SCALE: ¾" = 1'-0"

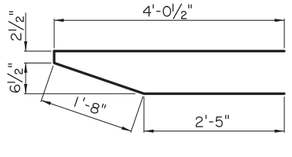

403
(2" ø PIN)

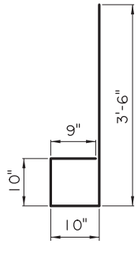

506
(2½" ø PIN)

505
(2½" ø PIN)

504
(2½" ø PIN)

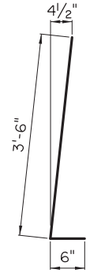

503
(2½" ø PIN)

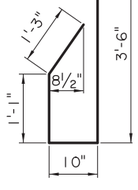

502
(2½" ø PIN)

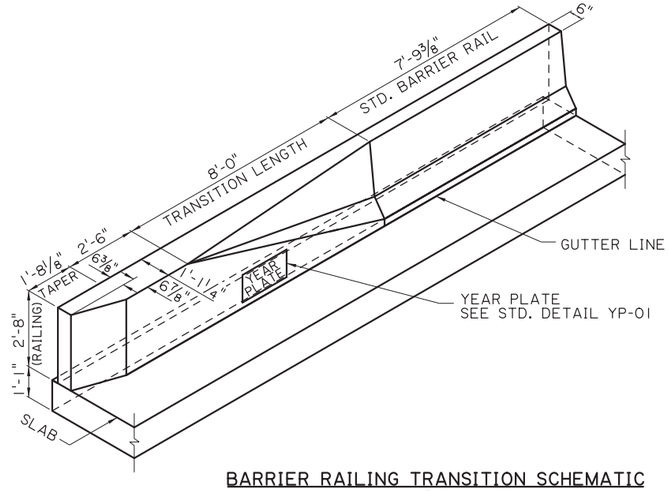

BARRIER RAILING TRANSITION SCHEMATIC
SCALE: ⅜" = 1'-0"

FOR INFORMATIONAL USE

SHEET NUMBER

PARISH | CONTROL SECTION | STATE PROJECT

DESIGN B. DELATTE | CHECK J. NAKHLEH | DETAIL D. HYMEL | CHECK J. NAKHLEH | REVIEW | SERIES # 3 OF 11

APPROVED BY CHIEF ENGINEER: DATE: 12/10/2025

NO. | DATE | REVISION OR CHANGE ORDER DESCRIPTION | BY

STATE OF LOUISIANA DEPARTMENT OF TRANSPORTATION AND DEVELOPMENT

SPAN (2 OF 2) 20'-0" CONCRETE BARRIER

28'-0" CLEAR ROADWAY
90° CROSSING TWO WAY TANGENT

PSS-90-28-20SL

DOTD LOUISIANA DEPARTMENT OF TRANSPORTATION & DEVELOPMENT

STANDARD PLAN

11/20/2025 08:1

IP_PWP:d1246420\SS9028span2(LRFD).dgn

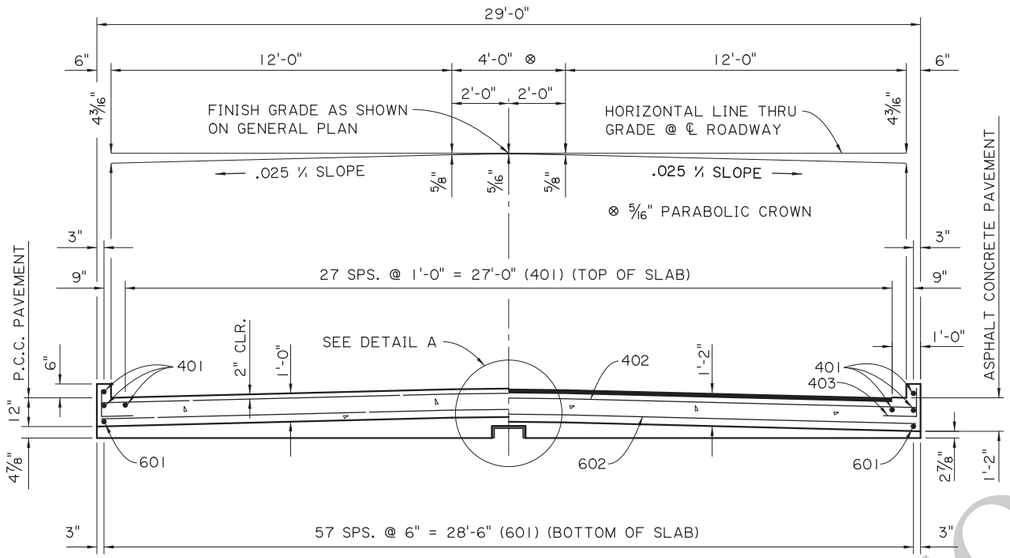

SECTION A-A

SCALE ⅜" = 1'-0"

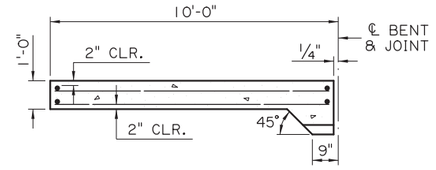

(FOR PORTLAND CEMENT CONCRETE ROADWAY PAVEMENT)

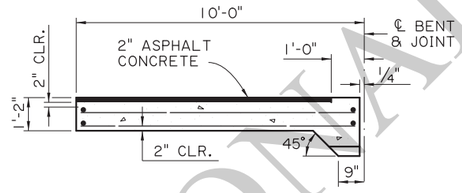

(FOR ASPHALT CONCRETE ROADWAY PAVEMENT)

ESTIMATED QUANTITIES (ONE SLAB)				
BAR	NO.	UNIT LENGTH	TOTAL LENGTH	LOCATION
601	58	9'-7"	555'-10"	LONGIT. BOT. OF SLAB
602	20	28'-8"	573'-4"	TRANSV. BOT. OF SLAB
TOTAL NO. 6 BARS = 1,129'-2" = 1,696 LBS.				
401	32	9'-7"	306'-8"	LONGIT. TOP OF SLAB & CURB
402	11	28'-8"	315'-4"	TRANSV. TOP OF SLAB
403	14	2'-0"	28'-0"	DOWELS IN CURB
TOTAL NO. 4 BARS = 650'-0" = 434 LBS.				
⊙ TOTAL DEFORMED REINFORCING STEEL= 2,130 LBS.				
CONCRETE APPROACH SLAB = 32.22 SQ. YDS.				
⊙ ☑ ASPHALT CONCRETE = 3.0 TONS				
⊙ ☑ SAW CUT & SEAL = 27 LIN. FT.				

⊙ TO BE PAID FOR UNDER ITEM CONCRETE APPROACH SLABS.

☑ REQUIRED WHEN APPROACH SLAB IS ADJACENT TO ASPHALT CONCRETE PAVEMENT.

SECTION ALONG ℄ ROADWAY

SCALE: ⅜" = 1'-0"

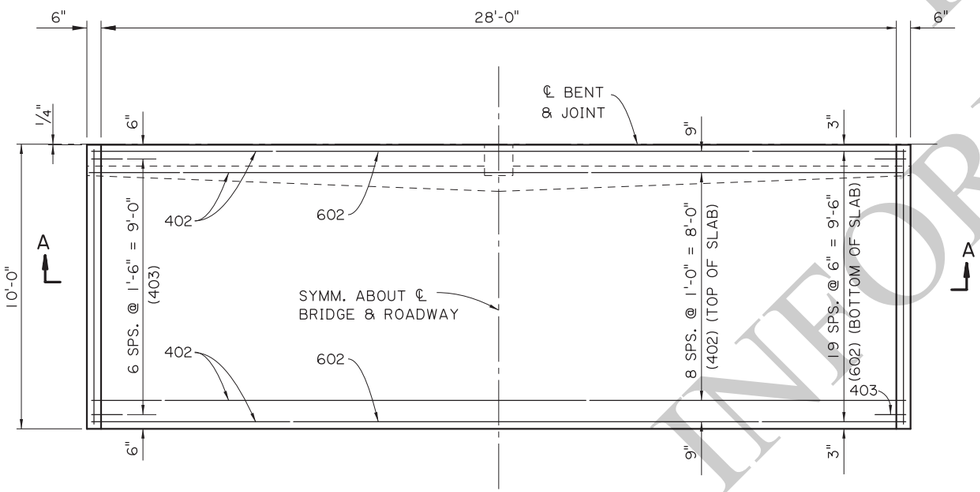

PLAN

SCALE ⅜" = 1'-0"

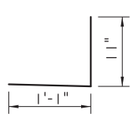

403
2" ø PIN

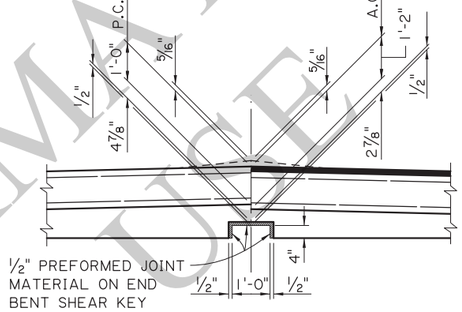

DETAIL A

SCALE : ½" = 1'-0"

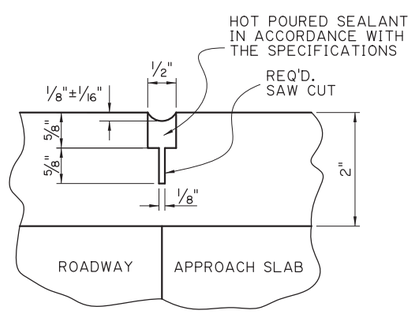

SAWING & SEALING JOINT DETAIL

N.T.S.

APPROACH SLAB NOTES:

DESIGN SPECIFICATIONS: AASHTO LRFD BRIDGE DESIGN SPECIFICATIONS 4th EDITION, WITH 2008 & 2009 INTERIMS.
STRUCTURAL CONCRETE: ALL CONCRETE SHALL BE CLASS A1. EXPOSED EDGES SHALL HAVE A ¾" CHAMFER, UNLESS SPECIFIED OTHERWISE.
ASPHALT CONCRETE: TO BE THE SAME TYPE AS THE ASPHALT CONCRETE USED FOR THE APPROACH ROADWAY PAVEMENT OR OVERLAY.
REINFORCING STEEL: ALL REINFORCING STEEL SHALL BE GRADE 60. DIMENSIONS RELATING TO THE FABRICATION ARE OUT-TO-OUT OF BARS, UNLESS SPECIFIED OTHERWISE. DIMENSIONS RELATING TO SPACING ARE TO BAR CENTERS.
BEDDING MATERIAL: FOR DETAILS OF BEDDING MATERIAL AND UNDERDRAINS SEE APPROACH SLAB STANDARD DETAILS.
SAWING & SEALING: THE ASPHALT CONCRETE SHALL BE SAW CUT AT THE END OF THE CONCRETE APPROACH SLAB THE ENTIRE ROADWAY WIDTH AND SEALED WHICH WILL BE PAID FOR UNDER THE DESIGNATED ROADWAY PAY ITEM.
PAYMENT: ALL OTHER WORK WILL BE PAID FOR UNDER THE DESIGNATED BRIDGE CONCRETE APPROACH SLAB PAY ITEM AND IN ACCORDANCE WITH THE SPECIFICATIONS.

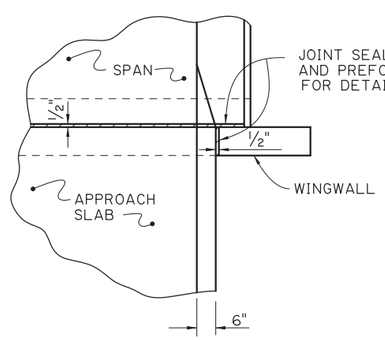

JOINT DETAIL

N.T.S.

FOR INFORMATIONAL USE

SHEET NUMBER

PARISH | CONTROL SECTION | STATE PROJECT

DESIGN B. DELATTE | CHECK J. NAKHLEH | DETAIL D. HYMEL | CHECK J. NAKHLEH | REVIEW | SERIES # 4 OF 11

APPROVED BY CHIEF ENGINEER: DATE: 12/10/2025

NO. | DATE | REVISION OR CHANGE ORDER DESCRIPTION | BY

STATE OF LOUISIANA DEPARTMENT OF TRANSPORTATION AND DEVELOPMENT

APPROACH SLAB
10'-0" CONCRETE APPROACH SLAB
28'-0" CLEAR ROADWAY
90° CROSSING TWO WAY TANGENT
PSS-90-28-20SL

DOTD LOUISIANA DEPARTMENT OF TRANSPORTATION & DEVELOPMENT

STANDARD PLAN

11/24/2025 17:1!

IP_PWP:d1246420\SS9028aprslab(LRFD).dgn

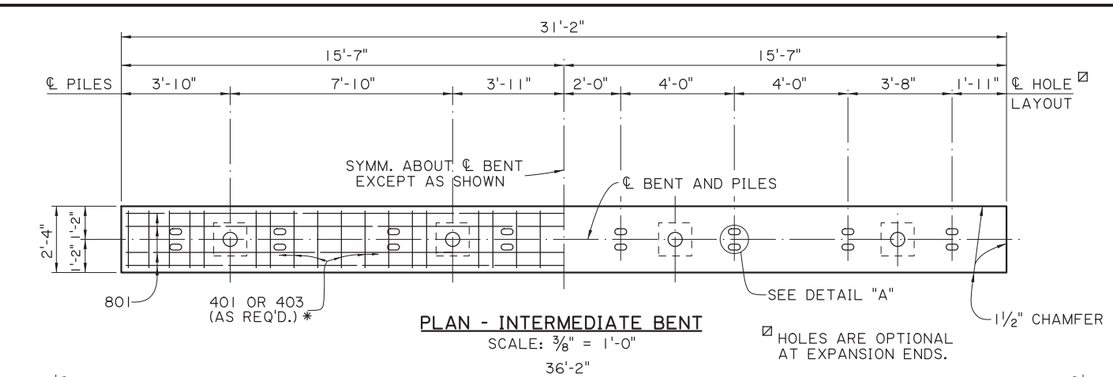

PLAN - INTERMEDIATE BENT
SCALE: ⅜" = 1'-0"

℄ HOLES ARE OPTIONAL AT EXPANSION ENDS.

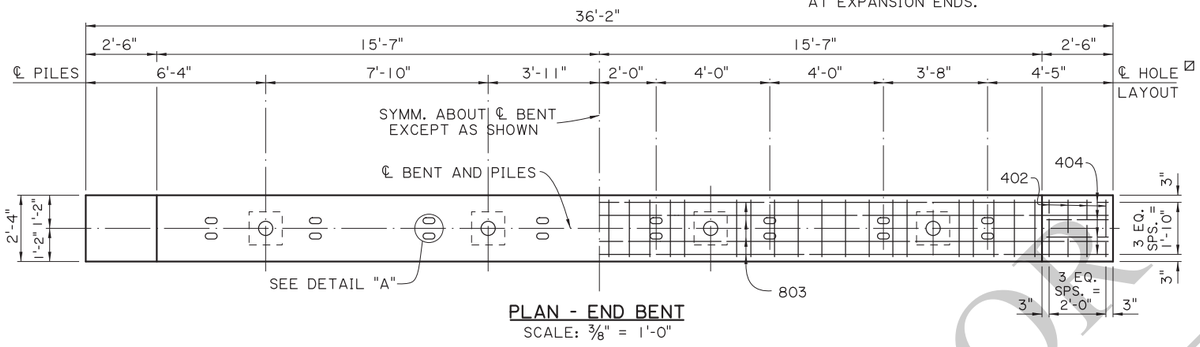

PLAN - END BENT
SCALE: ⅜" = 1'-0"

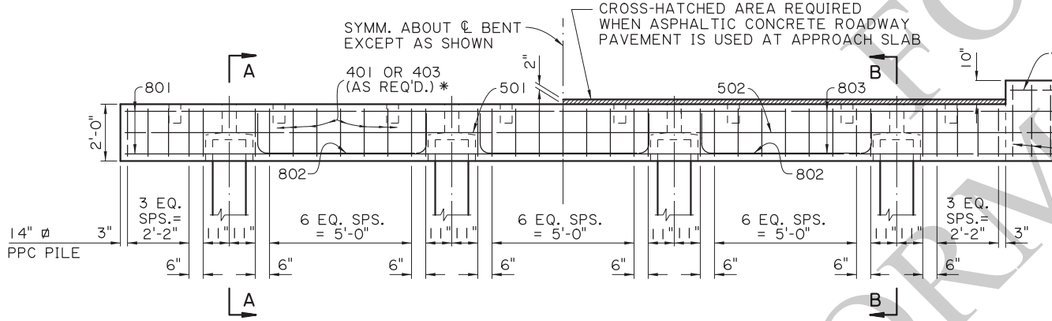

HALF ELEVATION - INTERMEDIATE BENT * USE 403 BARS AT HOLES ONLY
SCALE: ⅜" = 1'-0"

HALF ELEVATION - END BENT
SCALE: ⅜" = 1'-0"

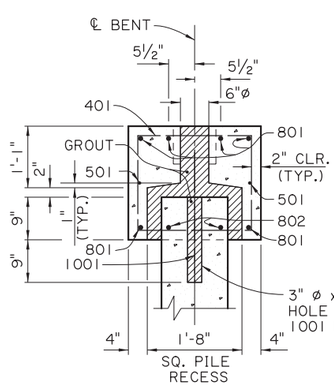

SECTION A-A
SCALE: ¾" = 1'-0"

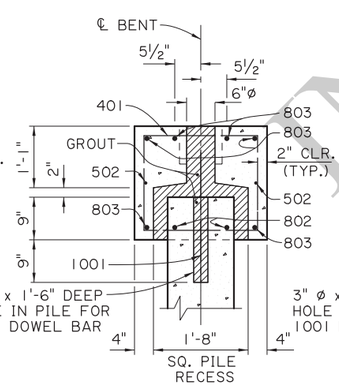

SECTION B-B
SCALE: ¾" = 1'-0"
(WHEN PORTLAND CEMENT CONCRETE ROADWAY PAVEMENT IS USED AT APPROACH SLAB)

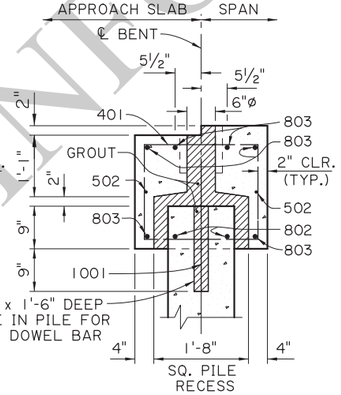

SECTION B-B
SCALE: ¾" = 1'-0"
(WHEN ASPHALTIC CONCRETE ROADWAY PAVEMENT IS USED AT APPROACH SLAB)

AS-DESIGNED RATING		
VEHICLE	RATING FACTOR	NOTES
HL-93 (INV)	1.684	——
HL-93 (OPR)	2.182	——
LADV-11 (INV)	1.295	MAGNIFICATION FACTOR = 1.3

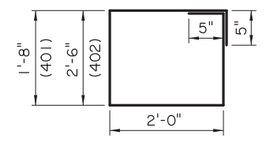

401 & 402
2" ø PIN

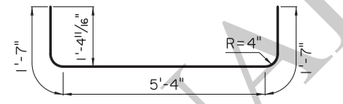

802
6" ø PIN

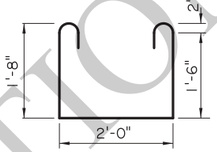

403
2" ø PIN

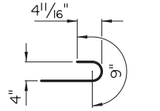

180° HOOK FOR 403 BARS
3" ø PIN

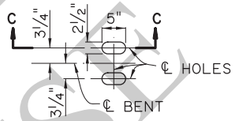

DETAIL A
SCALE: ¾" = 1'-0"

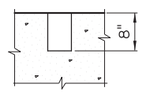

SECTION C-C
SCALE: ¾" = 1'-0"

ESTIMATED QUANTITIES (ONE INTER. BENT)				
BAR	NO.	UNIT LENGTH	TOTAL LENGTH	LOCATION
1001	4	2'-4"	9'-4"	DOWELS IN PILES
TOTAL NO. 10 BARS =			9'-4" =	40 LBS.
801	6	30'-10"	185'-0"	LONGIT. IN CAP
802	6	8'-6"	51'-0"	LONGIT. IN CAP BTW. PILES
TOTAL NO. 8 BARS =			236'-0" =	630 LBS.
501	2	30'-10"	61'-8"	LONGIT. IN CAP
TOTAL NO. 5 BARS =			61'-8" =	64 LBS.
401	31	8'-2"	253'-2"	STIRRUPS IN CAP
403	6	6'-6"	39'-0"	STIRRUPS IN CAP
TOTAL NO. 4 BARS =			292'-2" =	195 LBS.
TOTAL DEFORMED REINFORCING STEEL =				929 LBS.
TOTAL CLASS P1 CONCRETE =				5.07 CU. YDS.
MAX. PILE LOAD: SERVICE DEAD LOAD =				19 TONS
SERVICE LIVE LOAD =				36 TONS
FACTORED TOTAL LOAD =				75 TONS
TOTAL GROUT FOR PILE RECESSES = 0.28 CU. YDS.				

ESTIMATED QUANTITIES (ONE END BENT)				
BAR	NO.	UNIT LENGTH	TOTAL LENGTH	LOCATION
1001	4	2'-4"	9'-4"	DOWELS IN PILES
TOTAL NO. 10 BARS =			9'-4" =	40 LBS.
802	6	8'-6"	51'-0"	LONGIT. IN CAP BTW. PILES
803	6	35'-10"	215'-0"	LONGIT. IN CAP
TOTAL NO. 8 BARS =			266'-0" =	710 LBS.
502	2	35'-10"	71'-8"	LONGIT. IN CAP
TOTAL NO. 5 BARS =			71'-8" =	75 LBS.
401	31	8'-6"	253'-2"	STIRRUPS IN CAP
402	8	9'-10"	78'-8"	STIRRUPS IN WINGWALL
403	6	6'-6"	39'-0"	STIRRUPS IN CAP
404	8	2'-2"	17'-4"	LONGIT. IN WINGWALL
TOTAL NO. 4 BARS =			388'-2" =	259 LBS.
TOTAL DEFORMED REINFORCING STEEL =				1084 LBS.
⊗ TOTAL CLASS P1 CONCRETE =				6.29 CU. YDS.
MAX. PILE LOAD: SERVICE DEAD LOAD =				19 TONS
SERVICE LIVE LOAD =				36 TONS
FACTORED TOTAL LOAD =				75 TONS
TOTAL GROUT FOR PILE RECESSES = 0.28 CU. YDS.				

⊗ ADD 0.22 CU. YDS. OF CLASS P1 CONCRETE PER BENT WHEN ASPHALTIC CONCRETE ROADWAY PAVEMENT IS USED AT APPROACH SLAB.

ALTERNATE BENT NOTES:

DESIGN SPECIFICATIONS: AASHTO LRFD BRIDGE DESIGN SPECIFICATIONS, 4th EDITION, WITH 2008 & 2009 INTERIMS.
DESIGN LOAD: LIVE LOAD IS HL-93, AND LADV-11 (LOUISIANA DESIGN VEHICLE LIVE LOAD 2011).
STRUCTURAL CONCRETE: ALL CONCRETE SHALL BE CLASS P1. STEEL SIDE FORMS AND STEEL OR CONCRETE BOTTOM FORMS SHALL BE USED FOR PRECAST COMPONENTS. EXPOSED EDGES SHALL HAVE A ¾" CHAMFER UNLESS SPECIFIED OTHERWISE. ALL SURFACES SHALL RECEIVE A CLASS I ORDINARY SURFACE FINISH UPON REMOVAL OF THE FORMS. ALL EXPOSED FACES OF WINGWALLS AND ENDS OF CAPS SHALL RECEIVE A CLASS 3 SPECIAL SURFACE FINISH.
REINFORCING STEEL: ALL REINFORCING SHALL BE GRADE 60. DIMENSIONS RELATING TO FABRICATION ARE OUT TO OUT OF BARS, UNLESS SPECIFIED OTHERWISE. DIMENSIONS RELATING TO SPACING ARE TO BAR CENTERS, UNLESS SPECIFIED OTHERWISE.
GROUT: THE GROUT SHALL BE AN APPROVED FLOWABLE NON-SHRINK GROUT LISTED ON AML. THE GROUT SHALL BE TESTED FOR ACCEPTANCE PRIOR TO USAGE. SURFACES SHALL BE THOROUGHLY SATURATED WITH WATER BY FLOODING THE VOID FOR APPROXIMATELY 5 MINUTES IMMEDIATELY BEFORE THE GROUT IS PLACED. ONLY POTABLE WATER SHALL BE USED FOR SATURATION AND MIXING PURPOSES.
PRECAST UNITS: THE PLANS FOR AN ONGOING OPERATION OF FABRICATING FACILITIES SHALL BE APPROVED BY THE DEPARTMENT. EACH UNIT SHALL HAVE THE FABRICATOR'S MARK AND UNIQUE NUMBER, MEETING THE APPROVAL OF THE ENGINEER, STAMPED OR SCRIBED IN THE PLASTIC CONCRETE. ALL UNITS SHALL BE HELD AT THE PLANT FOR A MINIMUM OF 10 DAYS AFTER CASTING. THE CONCRETE SHALL REACH A MINIMUM STRENGTH OF 3,000 PSI BEFORE HANDLING IS PERMITTED. THE LIFTING INSERTS SHALL BE 1" TYPE S INSERTS AS MANUFACTURED BY DAYTON-SUPERIOR CORPORATION OR AN APPROVED EQUAL. EACH INSERT SHALL HAVE A MINIMUM LOAD CAPACITY OF 10,000 POUNDS. FOUR INSERTS WITH 1" ø x 5" LONG COIL BOLTS SHALL BE PLACED IN THE TOP OF THE UNITS AND LOCATED AT A DISTANCE 21% OF ITS LENGTH (+/- 6") FROM EACH END AND 6" FROM THE EDGES. INSERT HOLES SHALL BE GROUT FILLED AFTER PLACEMENT OF THE UNIT. AT THE CONTRACTOR'S OPTION, A SLING OF SUFFICIENT CAPACITY MAY BE USED FOR LIFTING, PROVIDED THE SAME PICKUP LOCATIONS FROM THE ENDS ARE USED.
PRECAST CONCRETE PILES: CONFORM TO PILE STANDARD PLAN AND PROJECT PLANS FOR FABRICATION AND INSTALLATION. IF TOP CENTER OF DRIVEN PILE IS OUTSIDE OF SPECIFIED HORIZONTAL TOLERANCES BUT WITHIN SPECIFIED VERTICAL TOLERANCES, PROVIDE CAST-IN-PLACE BENT CAP IN ACCORDANCE THIS STANDARD PLAN. PILES WILL BE PAID FOR UNDER THE DESIGNATED PILE PAY ITEMS.
PAYMENT: ALL OTHER WORK WILL BE PAID FOR UNDER THE DESIGNATED BRIDGE SUPERSTRUCTURE AND SUBSTRUCTURE PAY ITEM AND IN ACCORDANCE WITH THE SPECIFICATIONS.

INFORMATIONAL USE

SHEET NUMBER
PARISH
CONTROL SECTION
STATE PROJECT
DESIGN B. DELATTE
CHECK J. NAKHLEH
DETAIL D. HYMEL
CHECK J. NAKHLEH
REVIEW
SERIES # 5 OF 11
APPROVED BY CHIEF ENGINEER:
DATE: 12/10/2025
NO. DATE REVISION OR CHANGE ORDER DESCRIPTION BY

STATE OF LOUISIANA DEPARTMENT OF TRANSPORTATION AND DEVELOPMENT

ALTERNATE BENTS PRECAST CONCRETE BENT

28'-0" CLEAR ROADWAY
90° CROSSING TWO WAY TANGENT

PSS-90-28-20SL

DOTD
LOUISIANA DEPARTMENT OF TRANSPORTATION & DEVELOPMENT

STANDARD PLAN

11/24/2025 16:3
IP_PWP:d1246420\SS9028altbent1(LRFD).dgn

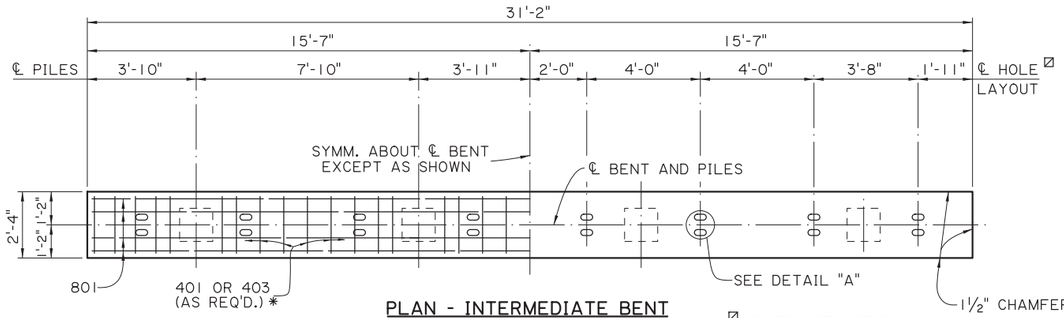

PLAN - INTERMEDIATE BENT
SCALE: ⅜" = 1'-0"

⊠ HOLES ARE OPTIONAL AT EXPANSION ENDS.

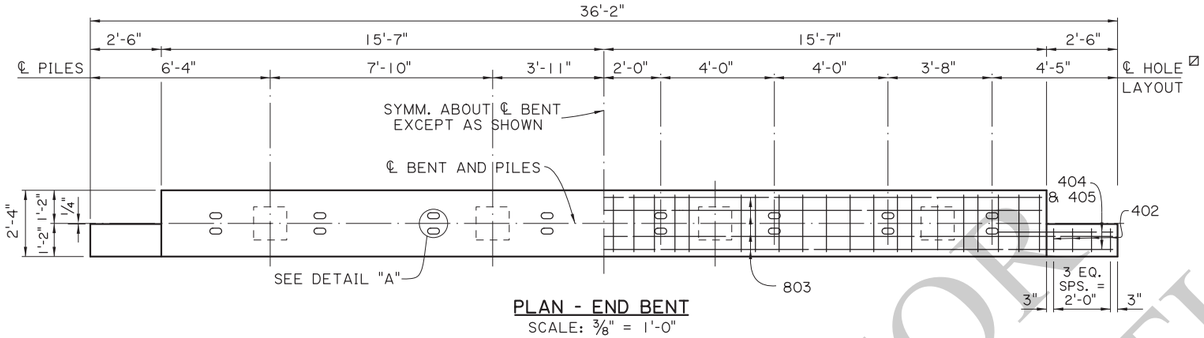

PLAN - END BENT
SCALE: ⅜" = 1'-0"

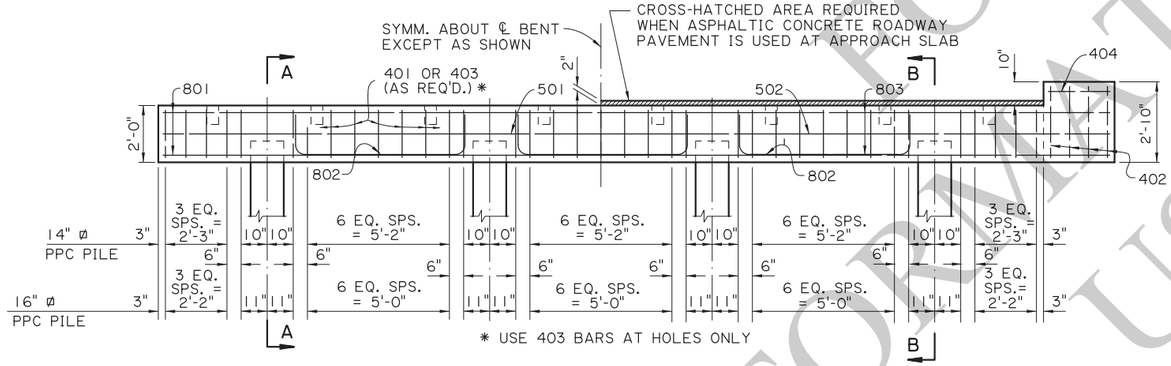

HALF ELEVATION - INTERMEDIATE BENT
SCALE: ⅜" = 1'-0"

HALF ELEVATION - END BENT
SCALE: ⅜" = 1'-0"

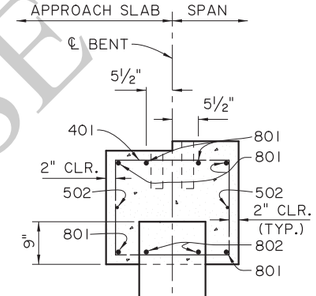

SECTION A-A
SCALE: ¾" = 1'-0"

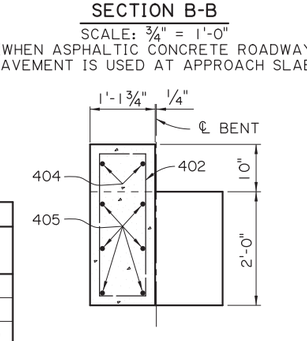

SECTION B-B
SCALE: ¾" = 1'-0"
(WHEN PORTLAND CEMENT CONCRETE ROADWAY PAVEMENT IS USED AT APPROACH SLAB)

SECTION B-B
SCALE: ¾" = 1'-0"
(WHEN ASPHALTIC CONCRETE ROADWAY PAVEMENT IS USED AT APPROACH SLAB)

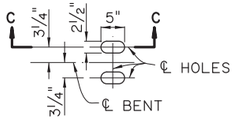

DETAIL A
SCALE: ¾" = 1'-0"

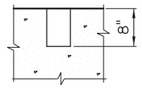

SECTION C-C
SCALE: ¾" = 1'-0"

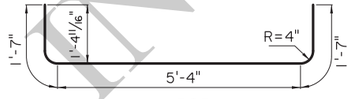

802
6" ø PIN

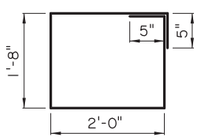

401
2" ø PIN

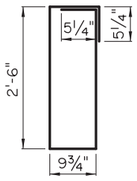

402
2" ø PIN

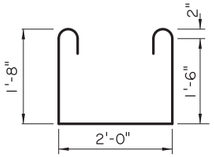

403
2" ø PIN

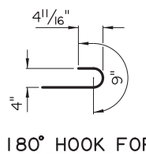

180° HOOK FOR 403 BARS
3" ø PIN

AS-DESIGNED RATING		
VEHICLE	RATING FACTOR	NOTES
HL-93 (INV)	1.649	——
HL-93 (OPR)	2.138	——
LADV-11 (INV)	1.268	MAGNIFICATION FACTOR = 1.3

ESTIMATED QUANTITIES (ONE INTER. BENT)				
BAR	NO.	UNIT LENGTH	TOTAL LENGTH	LOCATION
801	6	30'-10"	185'-0"	LONGIT. IN CAP
802	6	8'-6"	51'-0"	LONGIT. IN CAP BTW. PILES
TOTAL NO. 8 BARS = 236'-0" = 630 LBS.				
501	2	30'-10"	61'-8"	LONGIT. IN CAP
TOTAL NO. 5 BARS = 61'-8" = 64 LBS.				
401	31	8'-2"	253'-2"	STIRRUPS IN CAP
403	6	6'-6"	39'-0"	STIRRUPS IN CAP
TOTAL NO. 4 BARS = 292'-2" = 195 LBS.				
TOTAL DEFORMED REINFORCING STEEL = 889 LBS.				
⊠ TOTAL CLASS A1 CONCRETE = 5.19 CU. YDS.				
MAX. PILE LOAD: SERVICE DEAD LOAD = 19 TONS SERVICE LIVE LOAD = 36 TONS FACTORED TOTAL LOAD = 75 TONS				

⊠ 16" ø PPC PILES USED FOR ESTIMATING PURPOSES ONLY. (ADD 0.04 CU. YDS. OF CLASS A1 CONCRETE PER BENT WHEN 14" ø PPC PILES ARE USED.)

ESTIMATED QUANTITIES (ONE END BENT)				
BAR	NO.	UNIT LENGTH	TOTAL LENGTH	LOCATION
801	6	30'-10"	185'-0"	LONGIT. IN CAP
802	6	8'-6"	51'-0"	LONGIT. IN CAP BTW. PILES
TOTAL NO. 8 BARS = 236'-0" = 630 LBS.				
501	2	30'-10"	61'-8"	LONGIT. IN CAP
TOTAL NO. 5 BARS = 61'-8" = 64 LBS.				
401	31	8'-2"	253'-2"	STIRRUPS IN CAP
402	8	7'-6"	60'-0"	STIRRUPS IN WINGWALL
403	6	6'-6"	39'-0"	STIRRUPS IN CAP
404	4	2'-2"	8'-8"	LONGIT. IN WINGWALL
405	12	4'-0"	48'-0"	LONGIT. IN WINGWALL
TOTAL NO. 4 BARS = 408'-10" = 273 LBS.				
TOTAL DEFORMED REINFORCING STEEL = 967 LBS.				
⊗ TOTAL CLASS A1 CONCRETE = 5.79 CU. YDS.				
MAX. PILE LOAD: SERVICE DEAD LOAD = 19 TONS SERVICE LIVE LOAD = 36 TONS FACTORED TOTAL LOAD = 75 TONS				

⊠ 16" ø PPC PILES USED FOR ESTIMATING PURPOSES ONLY. (ADD 0.04 CU. YDS. OF CLASS A1 CONCRETE PER BENT WHEN 14" ø PPC PILES ARE USED.) ADD 0.22 CU. YDS. OF CLASS A1 CONCRETE PER BENT WHEN ASPHALTIC CONCRETE ROADWAY PAVEMENT IS USED AT APPROACH SLAB.

END ELEVATION
SCALE: ¾" = 1'-0"

ALTERNATE BENT NOTES:

DESIGN SPECIFICATIONS: AASHTO LRFD BRIDGE DESIGN SPECIFICATIONS, 4th EDITION, WITH 2008 & 2009 INTERIMS.

DESIGN LOAD: LIVE LOAD IS HL-93, AND LADV-11 (LOUISIANA DESIGN VEHICLE LIVE LOAD 2011).

STRUCTURAL CONCRETE: ALL CONCRETE SHALL BE CLASS A1. EXPOSED EDGES SHALL HAVE A ¾" CHAMFER UNLESS SPECIFIED OTHERWISE. ALL EXPOSED FACES OF WINGWALLS AND ENDS OF CAPS SHALL RECEIVE A SURFACE FINISH AS PER THE SPECIFICATIONS UNLESS SPECIFIED OTHERWISE.

REINFORCING STEEL: ALL REINFORCING SHALL BE GRADE 60. DIMENSIONS RELATING TO FABRICATION ARE OUT TO OUT OF BARS, UNLESS OTHERWISE NOTED. DIMENSIONS RELATING TO SPACING ARE TO BAR CENTERS, UNLESS SPECIFIED OTHERWISE.

PRECAST CONCRETE PILES: CONFORM TO PILE STANDARD PLAN AND PROJECT PLANS FOR FABRICATION AND INSTALLATION. PILES WILL BE PAID FOR UNDER THE DESIGNATED PILE PAY ITEMS.

PAYMENT: ALL OTHER WORK WILL BE PAID FOR UNDER THE DESIGNATED BRIDGE SUPERSTRUCTURE AND SUBSTRUCTURE PAY ITEM AND IN ACCORDANCE WITH THE SPECIFICATIONS.

INFORMATIONAL USE

SHEET NUMBER

PARISH | CONTROL SECTION | STATE PROJECT

DESIGN B. DELATTE | CHECK J. NAKHLEH | DETAIL D. HYMEL | CHECK J. NAKHLEH | REVIEW | SERIES # 6 OF 11

APPROVED BY CHIEF ENGINEER: DATE: 12/10/2025

NO. | DATE | REVISION OR CHANGE ORDER DESCRIPTION | BY

STATE OF LOUISIANA DEPARTMENT OF TRANSPORTATION AND DEVELOPMENT

ALTERNATE BENTS
CAST-IN-PLACE CONCRETE BENT

28'-0" CLEAR ROADWAY
90° CROSSING TWO WAY TANGENT

PSS-90-28-20SL

DOTD
LOUISIANA DEPARTMENT OF TRANSPORTATION & DEVELOPMENT

STANDARD PLAN

11/24/2025 16:1

IP_PWP:d1246420\SS9028altbent2(LRFD).dgn

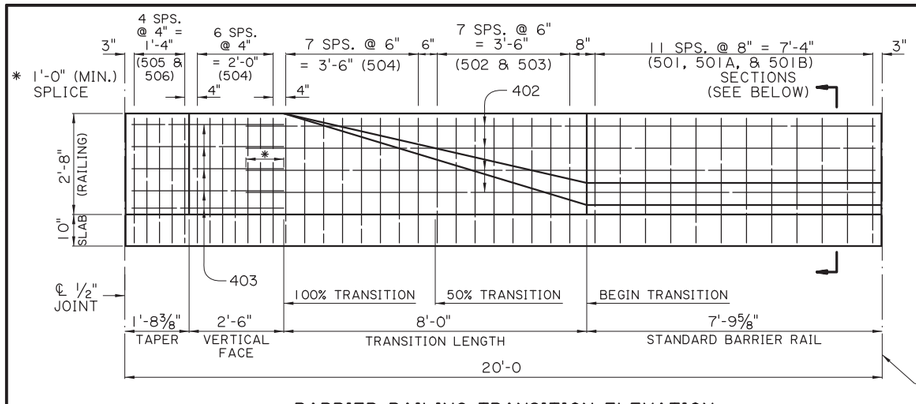

BARRIER RAILING TRANSITION ELEVATION
(SHOWING BARRIER RAILING AT END OF BRIDGE)
SCALE: ½" = 1'-0"

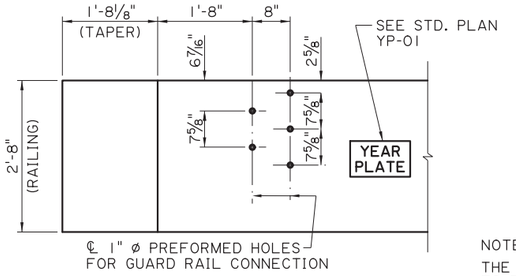

GUARD RAIL CONNECTION DETAIL
CONFORM TO GUARD RAIL STANDARD PLANS
SCALE : ¾" = 1'-0"

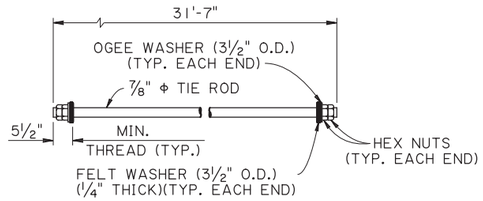

NOTE:
THE NUTS & WASHERS FOR THE TIE ROD SHALL BE ZINC COATED AND THE EXPOSED ENDS TO THE TIE RODS SHALL BE PAINTED WITH AN APPROVED COATING. AS A FINAL OPERATION THE CONTRACTOR SHALL BE REQUIRED TO TORQUE THE INSTALLED TIE ROD TO 170 FT. LBS. JUST PRIOR TO PAINTING. ALL EXPOSED ENDS SHALL BE PAINTED WITH AN APPROVED COATING AFTER STRESSING. ONE (1) MECHANICAL SPLICE MAY BE USED IN SPLICING THE ⅞" ø TIE ROD. THE SPLICE SHALL DEVELOP AT LEAST 125% OF THE SPECIFIED YIELD STRENGTH OF THE TIE ROD IN TENSION. THE MECHANICAL SPLICE SHALL BE ZINC COATED OR PAINTED WITH AN APPROVED COLD GALVANIZING REPAIR COMPOUND FROM AML PRIOR TO PLACING THE TIE ROD IN THE STRUCTURE.

DETAILS OF TIE ROD

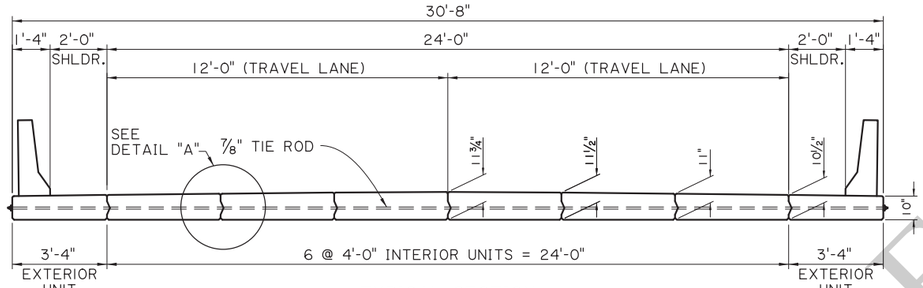

TYPICAL SECTION
SCALE : ⅜" = 1'-0"

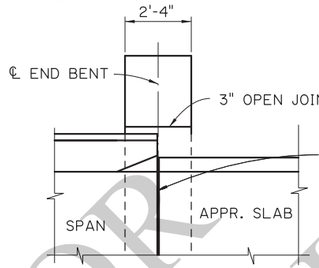

JOINT DETAIL
N.T.S.

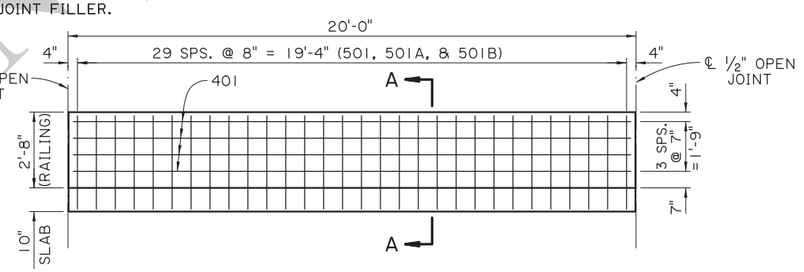

STANDARD BARRIER RAILING ELEVATION
(SHOWING BARRIER RAILING ALONG BRIDGE END)
SCALE : ⅜" = 1'-0"

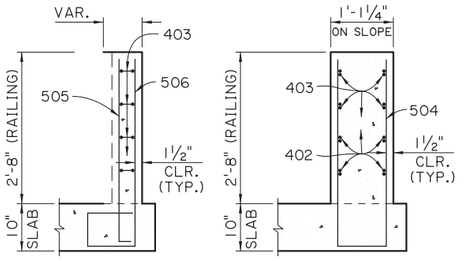

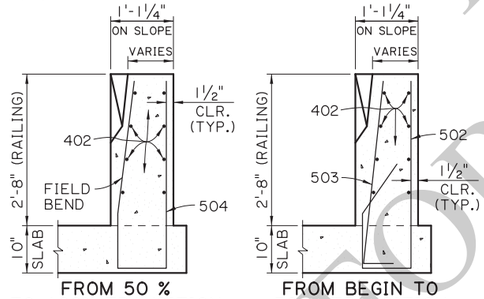

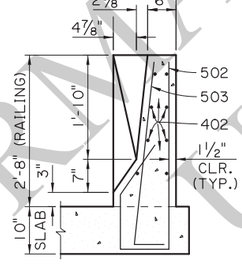

BARRIER RAILING TRANSITION SECTIONS
SCALE : ¾" = 1'-0"

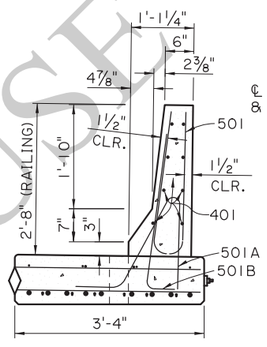

SECTION A-A
SCALE : ¾" = 1'-0"

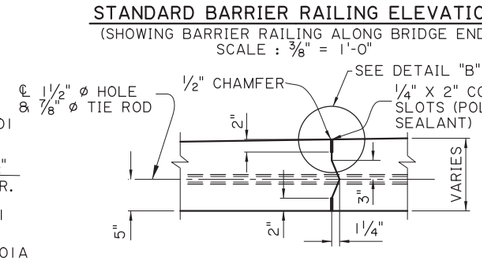

DETAIL "A"
SCALE: 1" = 1'-0"

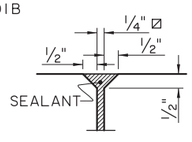

Ø MAY BE ⅛" IF ADJACENT MATCH IS USED

DETAIL "B"
SCALE: 1" = 1'-0"

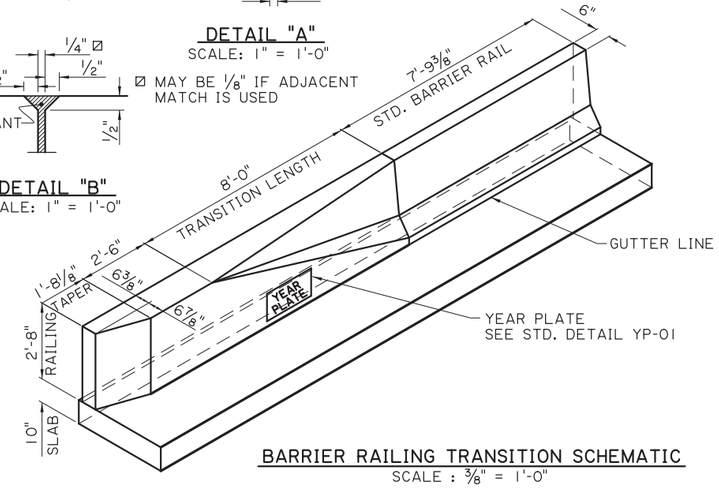

BARRIER RAILING TRANSITION SCHEMATIC
SCALE : ⅜" = 1'-0"

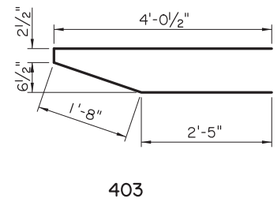

403
(2" ø PIN)
(8'-4" LONG)

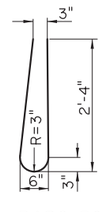

BARS 501
(4'-10" LONG)

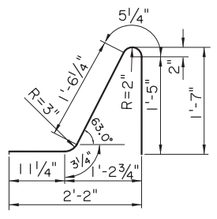

BARS 501A
(4'-7" LONG)

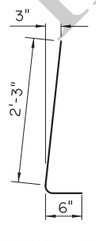

BARS 501B
(2½" ø PIN)
(2'-9" LONG)

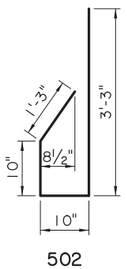

502
(2½" ø PIN)
(6'-2" LONG)

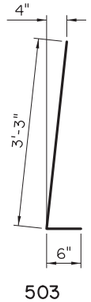

503
(2½" ø PIN)
(3'-9" LONG)

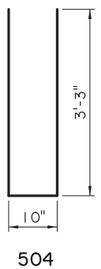

504
(2½" ø PIN)
(7'-4" LONG)

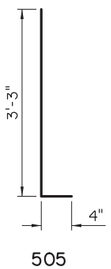

505
(2½" ø PIN)
(3'-7" LONG)

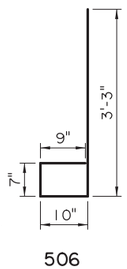

506
(2½" ø PIN)
(5'-5" LONG)

FOR INFORMATIONAL USE

SHEET NUMBER

PARISH | CONTROL SECTION | STATE PROJECT

DESIGN B. DELATTE | CHECK J. NAKHLEH | DETAIL D. HYMEL | CHECK J. NAKHLEH | REVIEW | SERIES # 7 OF 11

APPROVED BY CHIEF ENGINEER: DATE: 12/10/2025

NO.	DATE	REVISION OR CHANGE ORDER DESCRIPTION	BY

STATE OF LOUISIANA DEPARTMENT OF TRANSPORTATION & DEVELOPMENT

ALTERNATE SPAN (1 OF 4)
20'-0" CONCRETE SLAB SPAN

28'-0" CLEAR ROADWAY
90° CROSSING TWO WAY TANGENT

PSS-90-28-20SL

DOTD LOUISIANA DEPARTMENT OF TRANSPORTATION & DEVELOPMENT

STANDARD PLAN

09:0 11/20/2025

IP_PWP:d1246420\SS9028altspan1(LRFD).dgn

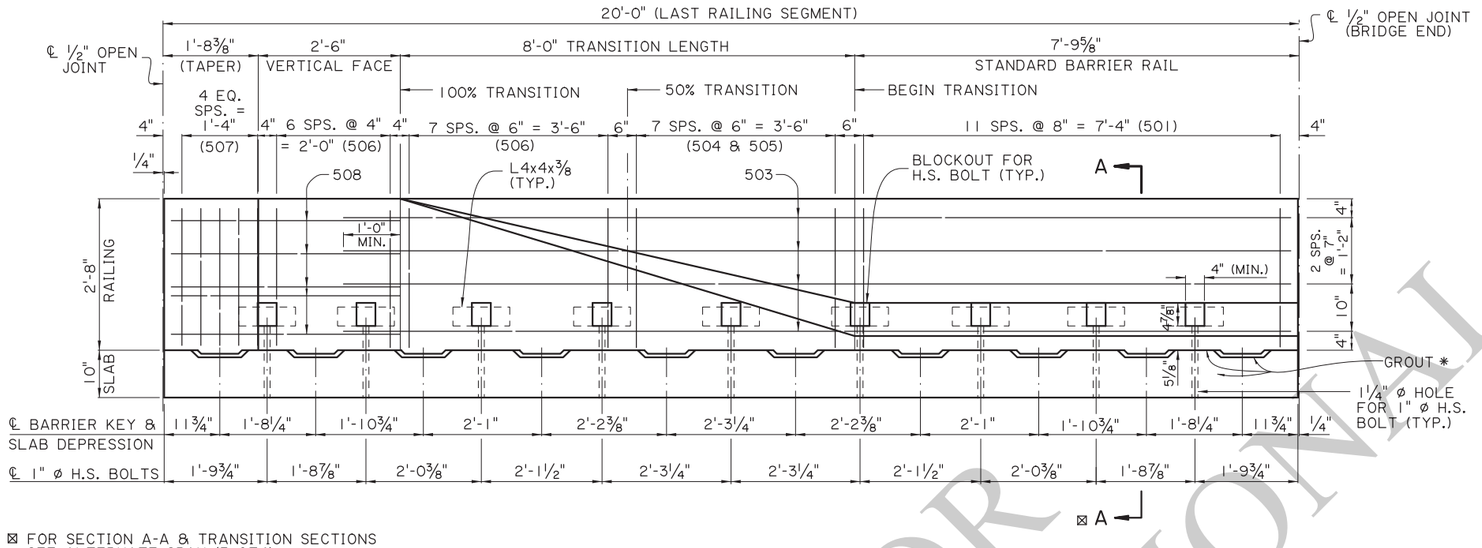

⊠ FOR SECTION A-A & TRANSITION SECTIONS SEE ALTERNATE SPAN (3 OF4)

PRECAST BARRIER RAILING TRANSITION ELEVATION

(SHOWING BARRIER RAILING AT END OF BRIDGE)
SCALE: ¾" = 1'-0"

* PLACE OR INJECT NON-SHRINK GROUT AS REQUIRED IN BETWEEN SLAB DEPRESSIONS TO FILL ALL VOIDS AND GAPS FOR FULL EVEN BEARING OF THE BARRIER ON THE SLAB. SEE NOTE 3, SHEET 9 OF 11.

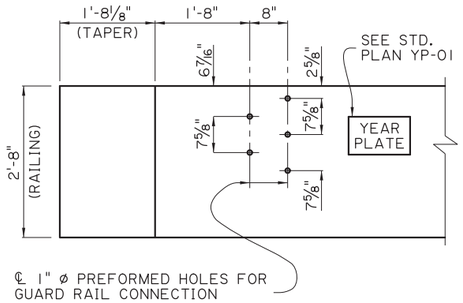

GUARD RAIL CONNECTION DETAIL

CONFORM TO GUARD RAIL STANDARD PLANS
SCALE: ¾" = 1'-0"

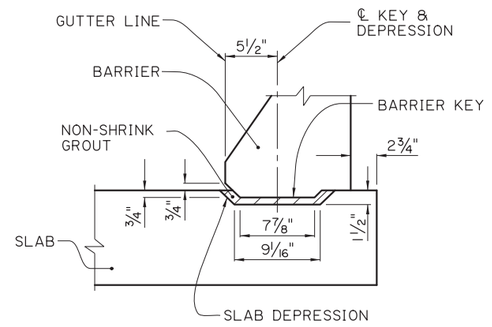

ELEVATION

SCALE: 1½" = 1'-0"

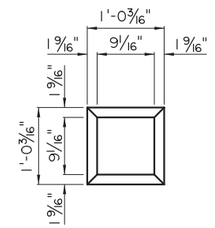

PLAN-DEPRESSION

SCALE: 1" = 1'-0"

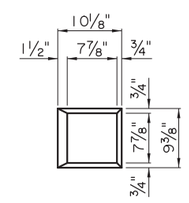

PLAN-KEY

SCALE: 1" = 1'-0"

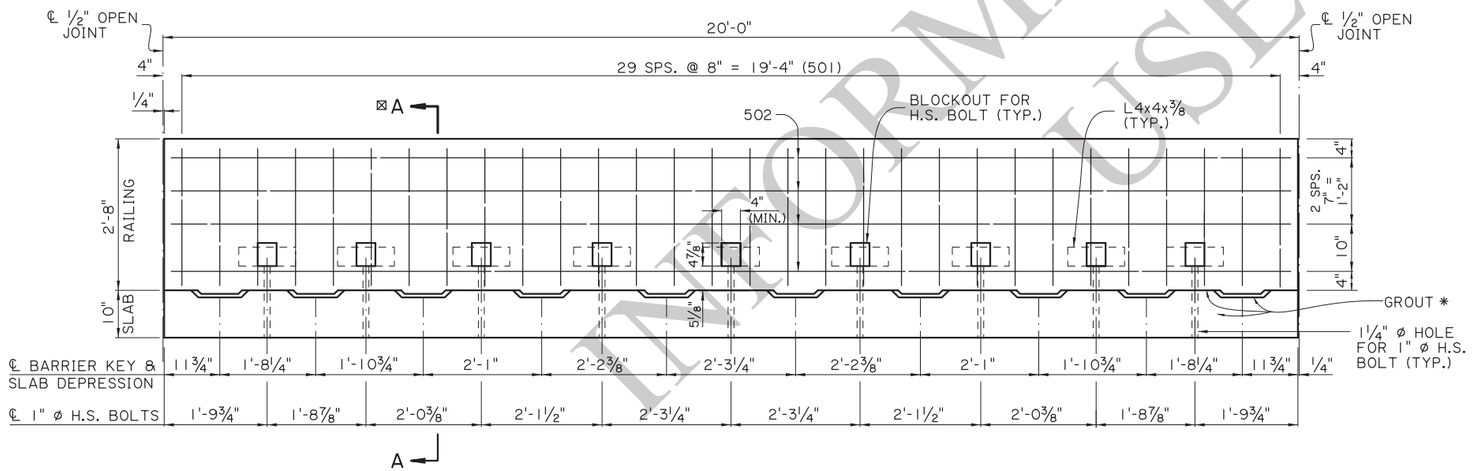

STANDARD PRECAST BARRIER RAILING ELEVATION

(SHOWING BARRIER RAILING ALONG BRIDGE SLAB)
SCALE: ¾" = 1'-0"

BARRIER KEY AND PANEL DEPRESSION DETAILS

FOR INFORMATIONAL USE

SHEET NUMBER	
PARISH	
CONTROL SECTION	
STATE PROJECT	
DESIGN B. DELATTE	DETAIL D. HYMEL
CHECK J. NAKHLEH	CHECK J. NAKHLEH
REVIEW	SERIES # 8 OF 11

APPROVED BY CHIEF ENGINEER: DATE: 12/10/2025

NO.	DATE	REVISION OR CHANGE ORDER DESCRIPTION	BY

STATE OF LOUISIANA

ALTERNATE SPAN (2 OF 4)
20'-0" PRECAST CONC. BARRIER

28'-0" CLEAR ROADWAY
90° CROSSING TWO WAY TANGENT

PSS-90-28-20SL

DOTD
LOUISIANA DEPARTMENT OF TRANSPORTATION & DEVELOPMENT

STANDARD PLAN

11/20/2025 09:0

IP_PWP:d1246420\SS9028altspan2(LRFD).dgn

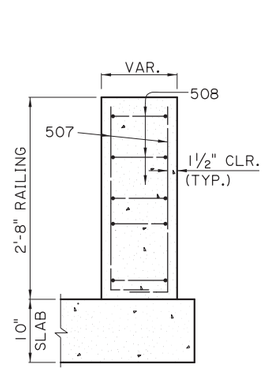

TAPER

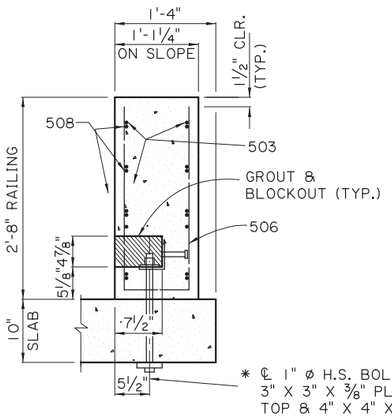

100% TRANSITION

* ℄ 1" ø H.S. BOLT, AND 3" X 3" X ⅜" PLATE WASHER TOP & 4" X 4" X ⅞" PLATE WASHER BOTTOM, AND ONE HEAVY HEX NUT (TYP.).

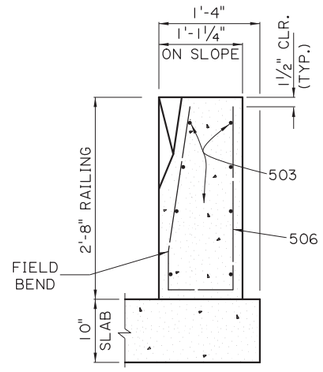

50% TRANSITION

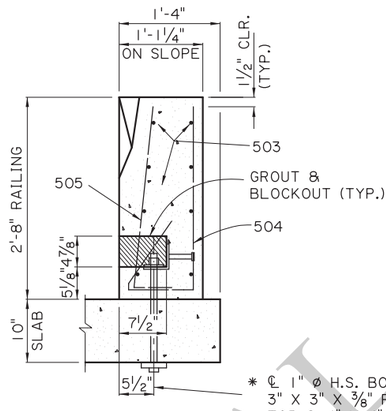

50% TRANSITION

* ℄ 1" ø H.S. BOLT, AND 3" X 3" X ⅜" PLATE WASHER TOP & 4" X 4" X ⅞" PLATE WASHER BOTTOM, AND ONE HEAVY HEX NUT (TYP.).

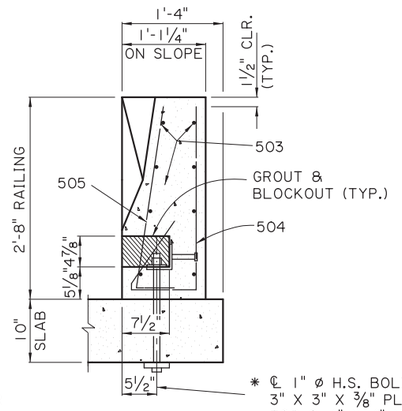

BEGIN TRANSITION

* ℄ 1" ø H.S. BOLT, AND 3" X 3" X ⅜" PLATE WASHER TOP & 4" X 4" X ⅞" PLATE WASHER BOTTOM, AND ONE HEAVY HEX NUT (TYP.).

BARRIER RAILING TRANSITION SECTIONS

SCALE: 1" = 1'-0"

* 1" ø THREADED STUD OF EQUAL STRENGTH, WITH 2 NUTS & 2 WASHERS, MAY BE USED IN LIEU OF H.S. BOLTS.

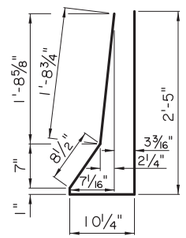

501
(2½" ø PIN)

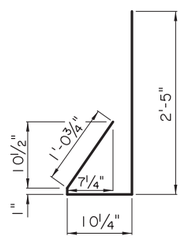

504
(2½" ø PIN)

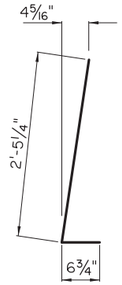

505
(2½" ø PIN)

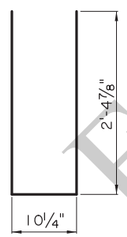

506
(2½" ø PIN)

507
(2½" ø PIN)

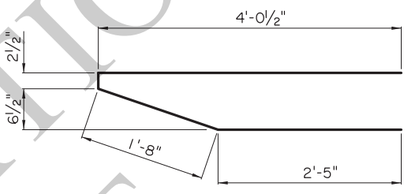

508
(2½" ø PIN)

NOTES:

1) ALL BARRIER RAIL SURFACES ARE TO RECEIVE A CLASS 3 SPECIAL FINISH.

2) ALL SURFACES OF THE BLOCKOUTS EXCEPT THE BOTTOM MAY BE TAPERED AND ALL CORNERS MAY BE ROUNDED TO A RADIUS TO ALLOW FOR EASY REMOVAL OF PLUGS OR FORMS. AFTER PLACING AND TIGHTENING THE ANCHOR BOLTS, THE BLOCKOUTS SHALL BE FILLED WITH AN APPROVED NON-SHRINK GROUT FROM AML AND TROWELED TO THE REQUIRED FINISH AND TO THE SATISFACTION OF THE ENGINEER.

3) AFTER BARRIER IS PLACED AND ALIGNED, ALL GAPS UNDER BARRIER AND TOP OF SLAB SHALL BE FILLED WITH NON-SHRINK GROUT FROM AML AND ALLOWED TO SET PRIOR TO TIGHTENING OF BOLTS. IT IS IMPORTANT TO FILL ALL VOIDS AND GAPS UNDER THE BARRIER TO ENSURE EVEN BEARING ON DECK WHEN THE ANCHOR BOLTS ARE LOADED.

4) ALL 1" ø BOLTS SHALL BE HIGH STRENGTH A325 OR APPROVED EQUAL. BOLT, NUT & WASHER TO BE GALVANIZED AS PER ASTM A-153. BOLTS SHALL BE TENSIONED TO 36 KIPS, OR APPROXIMATELY 540 FOOT-LB. OF TORQUE (LUBRICATED CONNECTION).

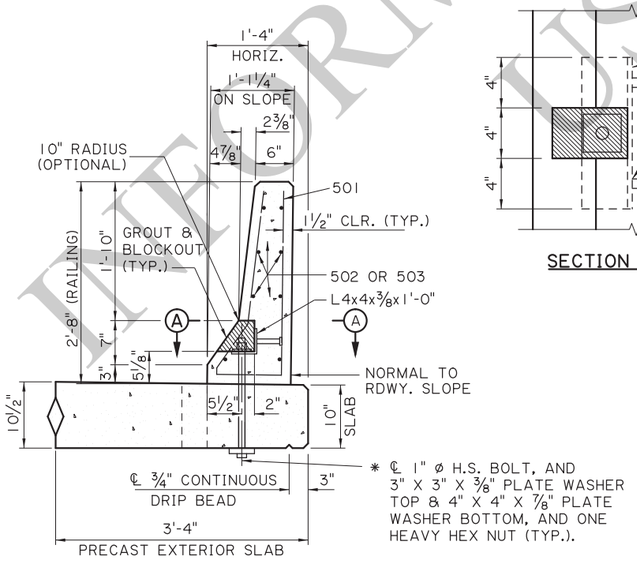

* ℄ 1" ø H.S. BOLT, AND 3" X 3" X ⅜" PLATE WASHER TOP & 4" X 4" X ⅞" PLATE WASHER BOTTOM, AND ONE HEAVY HEX NUT (TYP.).

SECTION A-A
SCALE: 1" = 1'-0"

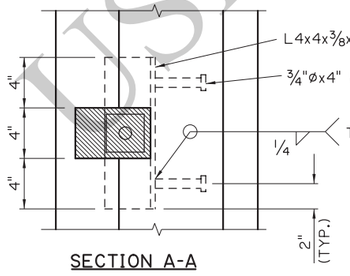

SECTION A-A

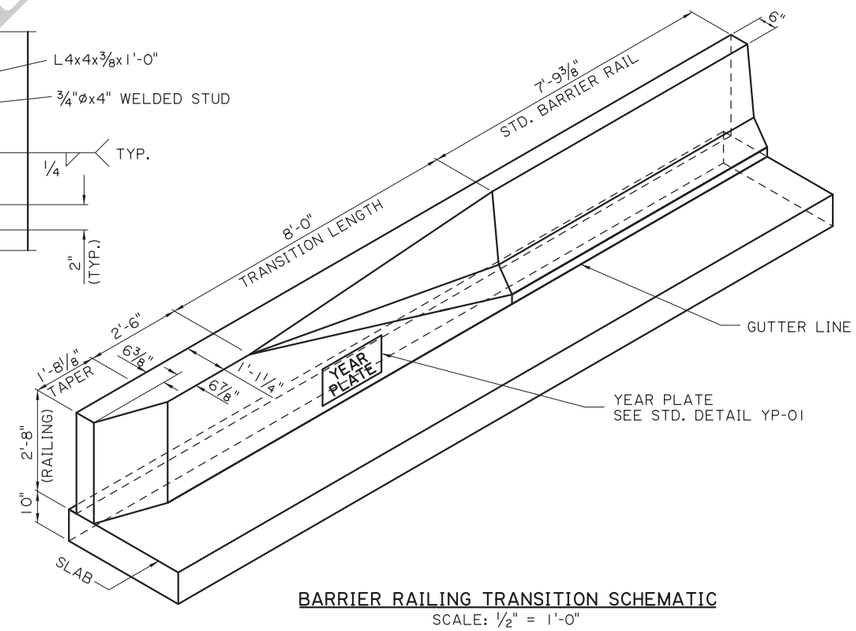

BARRIER RAILING TRANSITION SCHEMATIC
SCALE: ½" = 1'-0"

FOR INFORMATIONAL USE

SHEET NUMBER

PARISH	CONTROL SECTION	STATE PROJECT

DESIGN	B. DELATTE	DETAIL	D. HYMEL	REVIEW
CHECK	J. NAKHLEH	CHECK	J. NAKHLEH	SERIES # 9 OF 11

APPROVED BY CHIEF ENGINEER: DATE: 12/10/2025

NO.	DATE	REVISION OR CHANGE ORDER DESCRIPTION	BY

STATE OF LOUISIANA

ALTERNATE SPAN (3 OF 4)
20'-0" PRECAST CONC. BARRIER

28'-0" CLEAR ROADWAY
90° CROSSING TWO WAY TANGENT

PSS-90-28-20SL

DOTD
LOUISIANA DEPARTMENT OF TRANSPORTATION & DEVELOPMENT

STANDARD PLAN

11/20/2025 09:0

IP_PWP:d1246420\SS9028altspan3(LRFD).dgn

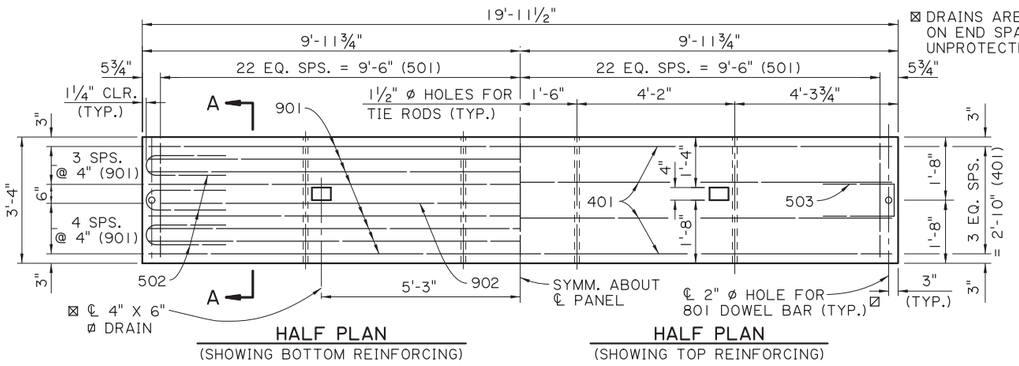

⊠ DRAINS ARE NOT REQUIRED ON END SPANS OVER UNPROTECTED SLOPES.

EXTERIOR UNIT
SCALE : ½" = 1'-0"

☑ HOLES ARE OPTIONAL AT EXPANSION ENDS.

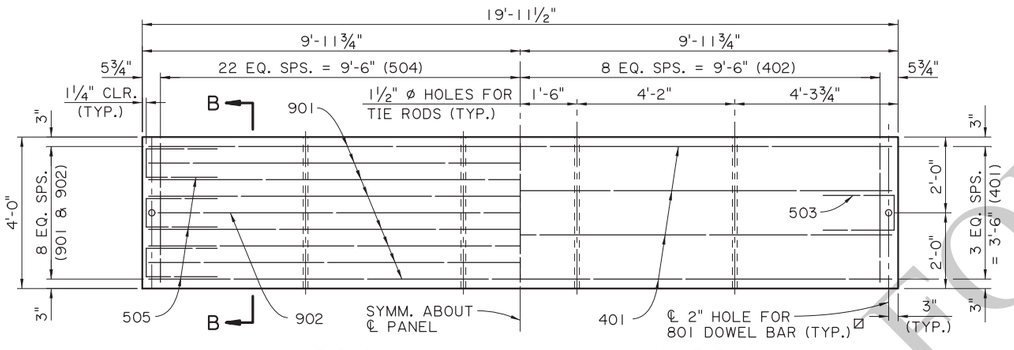

INTERIOR UNIT
SCALE : ½" = 1'-0"

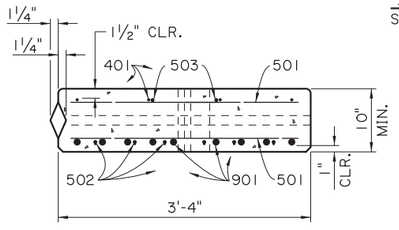

SECTION A-A
EXTERIOR UNIT
SCALE : 1" = 1'-0"

NOTE:
FOR EACH SPAN. ONE EXTERIOR UNIT WILL HAVE A TONGUE AND ONE WILL HAVE A GROOVE.

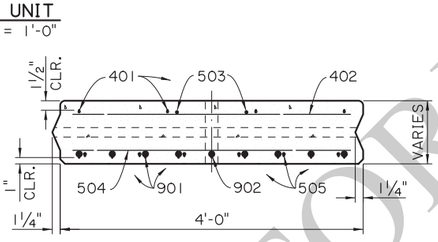

SECTION B-B
INTERIOR UNIT
SCALE : 1" = 1'-0"

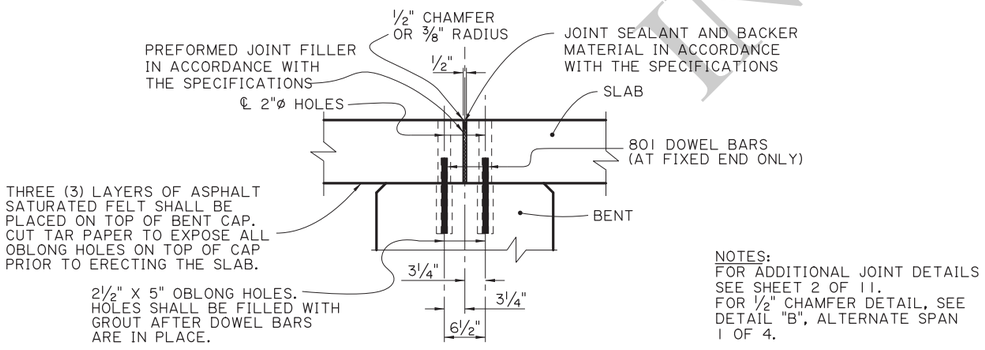

TYPICAL JOINT DETAIL
SCALE : 1" = 1'-0"

NOTES:
FOR ADDITIONAL JOINT DETAILS SEE SHEET 2 OF 11.
FOR ½" CHAMFER DETAIL, SEE DETAIL "B", ALTERNATE SPAN 1 OF 4.

ALTERNATE SPAN NOTES:

DESIGN SPECIFICATIONS : AASHTO LRFD BRIDGE DESIGN SPECIFICATIONS, 4th EDITION, WITH 2008 & 2009 INTERIMS.

DESIGN LOAD : THE BRIDGE DECK IS DESIGNED FOR A FUTURE WEARING COURSE OF 19 PSF. THE LIVE LOAD IS HL-93, AND LADV-11 (LOUISIANA DESIGN VEHICLE LIVE LOAD 2011).

STRUCTURAL CONCRETE : ALL CONCRETE SHALL BE CLASS P1. THE BRIDGE RAIL CONCRETE SHALL BE CLASS A1 IF RAIL IS CAST IN PLACE. STEEL SIDE FORMS AND STEEL OR CONCRETE BOTTOM FORMS SHALL BE USED FOR PRECAST COMPONENTS. EXPOSED EDGES SHALL HAVE A ¾" CHAMFER, UNLESS SPECIFIED OTHERWISE. ALL SURFACES SHALL RECEIVE A CLASS 1 ORDINARY SURFACE FINISH UPON REMOVAL OF THE FORMS. THE FINAL FINISH SHALL BE A TINE FINISH IN ACCORDANCE WITH THE SPECIFICATIONS.

REINFORCING STEEL: ALL REINFORCING STEEL SHALL BE GRADE 60. DIMENSIONS RELATING TO FABRICATION ARE OUT TO OUT OF BARS, UNLESS SPECIFIED OTHERWISE. DIMENSIONS RELATING TO SPACING ARE TO BAR CENTERS, UNLESS SPECIFIED OTHERWISE. ALL REINFORCING BARS SHALL BE PLACED TO PROVIDE A MINIMUMUM COVER OF 1" FROM THE DRAIN HOLES. REINFORCING STEEL MAY BE TACK WELDED FOR A DISTANCE OF NOT MORE THAN 4'-0" FROM EACH END OF UNIT. NO OTHER WELDING SHALL BE PERMITTED.

MISCELLANEOUS STEEL: HIGH STRENGTH BOLTS SHALL CONFORM TO ASTM DESIGNATION A-325. PRESTRESSING STRANDS SHALL CONFORM TO ASTM DESIGNATION A-416, GRADE 270. PLATES, TIE RODS, AND DRIFT BOLTS SHALL CONFORM TO ASTM DESIGNATION A709, GRADE 36. STEEL SPECIFIED TO BE ZINC COATED SHALL BE IN CONFORMANCE WITH ASTM DESIGNATION A-123.

GROUT: THE GROUT SHALL BE AN APPROVED FLOWABLE NON-SHRINK GROUT LISTED ON AML. THE GROUT SHALL BE TESTED FOR ACCEPTANCE PRIOR TO USAGE. THE GROUT SHALL ATTAIN A MINIMUM COMPRESSIVE STRENGTH OF 3500 PSI PRIOR TO LOADING SLABS. SURFACES SHALL BE THOROUGHLY SATURATED WITH WATER BY FLOODING THE HOLES FOR APPROXIMATELY FIVE (5) MINUTES IMMEDIATELY BEFORE THE GROUT IS PLACED. ONLY POTABLE WATER SHALL BE USED FOR SATURATION AND MIXING PURPOSES.

PATCHING MATERIAL: THE PATCHING MATERIAL SHALL BE AN APPROVED PATCHING MATERIAL FOR PRECAST OR PRESTREESED CONCRETE PRODUCTS LISTED ON AML. SURFACE PREPARATION, MIXING AND PLACMENT SHALL BE IN ACCORDANCE WITH THE MANUFACTURERS' RECOMMENDATIONS. ONLY POTABLE WATER SHALL BE USED FOR SATURATION AND MIXING PURPOSES.

PRECAST UNITS: THE PLANS FOR AN ONGOING OPERATION OF FABRICATION FACILITIES SHALL BE APPROVED BY THE DEPARTMENT. EACH UNIT SHALL HAVE "LIVE LOAD HL-93 & LADV-11", THE FABRICATOR'S MARK, AND UNIQUE NUMBER, MEETING THE APPROVAL OF THE ENGINEER STAMPED OR INSCRIBED IN THE PLASTIC CONCRETE. PRECAST UNITS MAY BE CAST WITH OR WITHOUT CAMBER. IF CAMBER IS PROVIDED IT SHALL NOT EXCEED ¼" AT THE CENTERLINE OF SPAN. ALL UNITS SHALL BE HELD AT THE PLANT FOR A MINIMUM OF TEN(10) DAYS AFTER CASTING. THE CONCRETE SHALL REACH A MINIMUM STRENGTH OF 3,000 PSI BEFORE HANDLING IS PERMITTED. THE LIFTING INSERTS SHALL BE 1", TYPE S INSERTS AS MANUFACTURED BY DAYTON-SUPERIOR CORPORATION OR AN APPROVED EQUAL. EACH INSERT SHALL HAVE A MINIMUM LOAD CAPACITY OF 10,000 POUNDS . FOUR(4) INSERTS WITH 1" ø X 5" LONG COIL BOLTS SHALL BE PLACED IN THE TOP OF THE UNIT AND LOCATED 1'-3" FROM ITS ENDS AND 1'-0" FROM ITS EDGES. INSERT HOLES SHALL BE GROUT FILLED AFTER PLACEMENT OF UNIT. AT THE CONTRACTOR'S OPTION A SLING OF SUFFICIENT CAPACITY MAY BE USED FOR LIFTING, PROVIDED THE SAME PICKUP LOCATION FROM THE ENDS ARE USED. FABRICATION TOLERANCES SHALL BE AS FOLLOWS:

UNIT DEPTH	± 3/16"
UNIT LENGTH	+ ⅛" AND -½"
OVERALL SPAN WIDTH	± 2"

ALL PRECAST UNITS IN EACH BRIDGE SPAN SHALL BE MATCH CAST IN THE SAME CASTING BED TO ENSURE A PROPER FIT DURING INSTALLATION.

GUARDRAIL: CONFORM TO PROJECT PLANS AND GUARD RAIL STANDARD PLANS.

PAYMENT: ALL WORK WILL BE PAID FOR UNDER THE DESIGNATED BRIDGE SUPERSTRUCTURE AND SUBSTRUCTURE PAY ITEM AND IN ACCORDANCE WITH THE SPECIFICATIONS.

ESTIMATED QUANTITIES (ONE EXTERIOR UNIT)

BAR	NO.	UNIT LENGTH	TOTAL LENGTH	LOCATION
901	8	19'-9"	158'-0"	LONGIT. BOT. OF SLAB
902	1	19'-1"	19'-1"	LONGIT. BOT. OF SLAB
TOTAL NO. 9 BARS = 177'-1" = 602 LBS.				
801	1	1'-0"	1'-0"	DOWELS
TOTAL NO. 8 BARS = 1'-0" = 3 LBS.				
501	90	3'-0"	270'-0"	TRANS. TOP & BOT. OF SLAB
502	6	4'-6"	27'-0"	BOT. END OF SLAB
503	2	4'-8"	9'-4"	TOP END OF SLAB
TOTAL NO. 5 BARS = 306'-4" = 320 LBS.				
401	4	19'-9"	79'-0"	LONGIT. TOP OF SLAB
TOTAL NO. 4 BARS = 79'-0" = 53 LBS.				
DEFORMED REINFORCING STEEL = 977 LBS.				
⊙ CLASS P1 CONCRETE = 2.05 CU. YDS.				
CONCRETE RAILING (PER SPAN) = 40.00 LIN. FT.				

ESTIMATED QUANTITIES (ONE INTERIOR UNIT)

BAR	NO.	UNIT LENGTH	TOTAL LENGTH	LOCATION
901	8	19'-9"	158'-0"	LONGIT. BOT. OF SLAB
902	1	19'-1"	19'-1"	LONGIT. BOT. OF SLAB
TOTAL NO. 9 BARS = 177'-1" = 602 LBS.				
801	1	1'-0"	1'-0"	DOWELS
TOTAL NO. 8 BARS = 1'-0" = 3 LBS.				
503	2	4'-8"	9'-4"	TOP END OF SLAB
504	44	3'-8"	161'-4"	TRANS. BOT. OF SLAB
505	6	4'-6"	27'-0"	BOT. END OF SLAB
TOTAL NO. 5 BARS = 197'-8" = 206 LBS.				
401	4	19'-9"	79'-0"	LONGIT. TOP OF SLAB
402	17	3'-8"	62'-4"	TRANS. TOP OF SLAB
TOTAL NO. 4 BARS = 141'-4" = 94 LBS.				
DEFORMED REINFORCING STEEL = 905 LBS.				
⊙ CLASS P1 CONCRETE = 2.46 CU. YDS.				

⊙ BASED ON A 10" SLAB THICKNESS

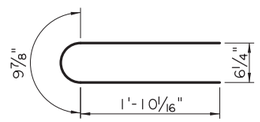

502
2½"ø PIN

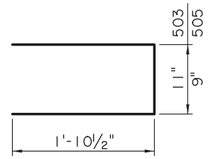

503 & 505
2½"ø PIN

AS-DESIGNED RATING

VEHICLE	RATING FACTOR	NOTES
HL-93 (INV)	1.335	——
HL-93 (OPR)	1.731	——
LADV-11 (INV)	1.027	MAGNIFICATION FACTOR = 1.3

SHEET NUMBER

PARISH | CONTROL SECTION | STATE PROJECT

DESIGN B. DELATTE | CHECK J. NAKHLEH | DETAIL D. HYMEL | CHECK J. NAKHLEH | REVIEW | SERIES # 10 OF 11

APPROVED BY CHIEF ENGINEER: DATE: 12/10/2025

NO. | DATE | REVISION OR CHANGE ORDER DESCRIPTION | BY

STATE OF LOUISIANA DEPARTMENT OF TRANSPORTATION AND DEVELOPMENT

ALTERNATE SPAN (4 OF 4)
20'-0" PRECAST CONC. SLAB UNIT
28'-0" CLEAR ROADWAY
90° CROSSING TWO WAY TANGENT

PSS-90-28-20SL

DOTD LOUISIANA DEPARTMENT OF TRANSPORTATION & DEVELOPMENT

STANDARD PLAN

FOR INFORMATION ONLY

IP_PWP:d1246420\SS9028altspan4(LRFD).dgn 11/24/2025 16:1

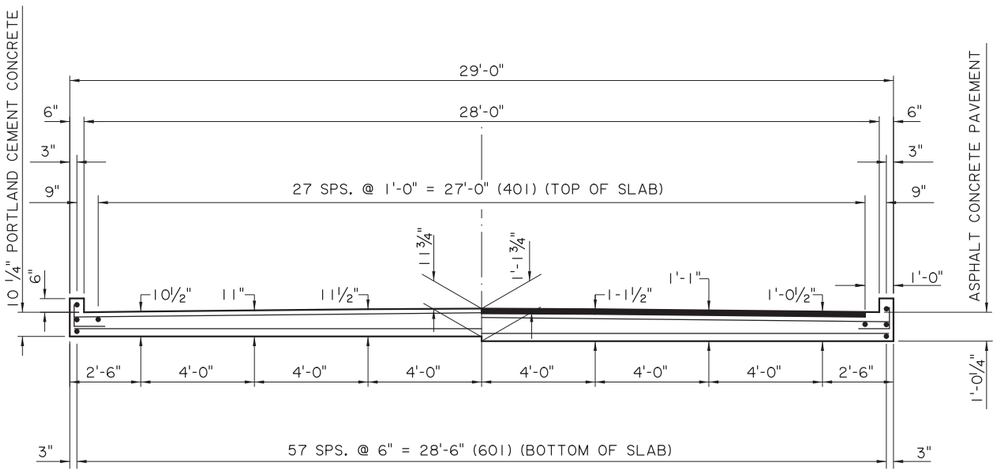

SECTION A-A
SCALE 3/8" = 1'-0"

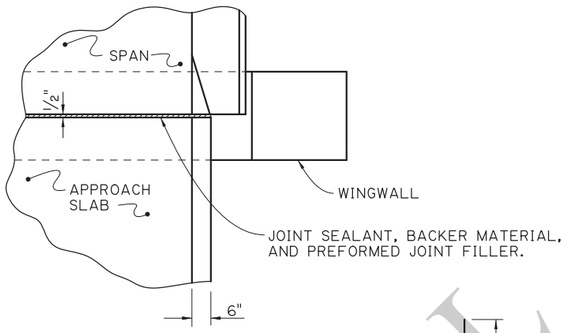

JOINT DETAIL
N.T.S.

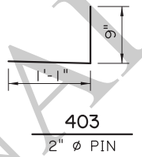

403
2" ø PIN

ESTIMATED QUANTITIES (ONE SLAB)				
BAR	NO.	UNIT LENGTH	TOTAL LENGTH	LOCATION
801	8	1'-0"	8'-0"	DOWELS
TOTAL NO. 8 BARS = 8'-0" = 21 LBS.				
601	58	9'-7"	555'-10"	LONGIT. BOT. OF SLAB
602	20	28'-8"	573'-4"	TRANSV. BOT. OF SLAB
TOTAL NO. 6 BARS = 1,129'-2" = 1,696 LBS.				
401	32	9'-7"	306'-8"	LONGIT. TOP OF SLAB & CURB
402	11	28'-8"	315'-4"	TRANSV. TOP OF SLAB
403	14	1'-10"	25'-8"	DOWELS IN CURB
TOTAL NO. 4 BARS = 647'-8" = 433 LBS.				
⊙ TOTAL DEFORMED REINFORCING STEEL = 2,150 LBS.				
CONCRETE APPROACH SLAB = 32.22 SQ. YDS.				
⊙ ⧄ ASPHALT CONCRETE = 3.0 TONS				
⊙ ⧄ SAW CUT & SEAL = 27 LIN. FT.				

⊙ TO BE PAID FOR UNDER ITEM CONCRETE APPROACH SLABS.
⧄ REQUIRED WHEN APPROACH SLAB IS ADJACENT TO ASPHALT CONCRETE PAVEMENT.

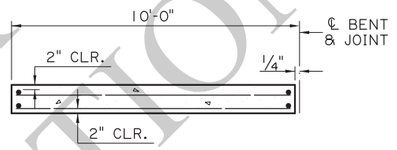

(FOR PORTLAND CEMENT CONCRETE ROADWAY PAVEMENT)

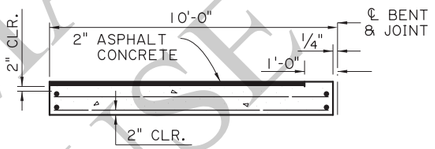

(FOR ASPHALT CONCRETE ROADWAY PAVEMENT)

SECTION ALONG ℄ ROADWAY
SCALE : 1/4" = 1'-0"

APPROACH SLAB NOTES:

DESIGN SPECIFICATIONS: AASHTO LRFD BRIDGE DESIGN SPECIFICATIONS 4th EDITION, WITH 2008 & 2009 INTERIMS.
STRUCTURAL CONCRETE: ALL CONCRETE SHALL BE CLASS A1. EXPOSED EDGES SHALL HAVE A 3/4" CHAMFER UNLESS SPECIFIED OTHERWISE.
ASPHALT CONCRETE: TO BE THE SAME TYPE AS THE ASPHALT CONCRETE USED FOR THE APPROACH ROADWAY PAVEMENT OR OVERLAY.
REINFORCING STEEL: ALL REINFORCING STEEL SHALL BE GRADE 60. DIMENSIONS RELATING TO THE FABRICATION ARE OUT-TO-OUT OF BARS, UNLESS SPECIFIED OTHERWISE. DIMENSIONS RELATING TO SPACING ARE TO BAR CENTERS.
BEDDING MATERIAL: FOR DETAILS OF BEDDING MATERIAL AND UNDERDRAINS SEE APPROACH SLAB STANDARD DETAILS.
SAWING & SEALING: THE ASPHALT CONCRETE SHALL BE SAW CUT AT THE END OF THE CONCRETE APPROACH SLAB THE ENTIRE ROADWAY WIDTH AND SEALED WHICH WILL BE PAID FOR UNDER THE DESIGNATED ROADWAY PAY ITEM. ITEM.
PAYMENT: ALL OTHER WORK WILL BE PAID FOR UNDER THE DESIGNATED BRIDGE CONCRETE APPROACH SLAB PAY ITEM AND IN ACCORDANCE WITH THE SPECIFICATIONS.

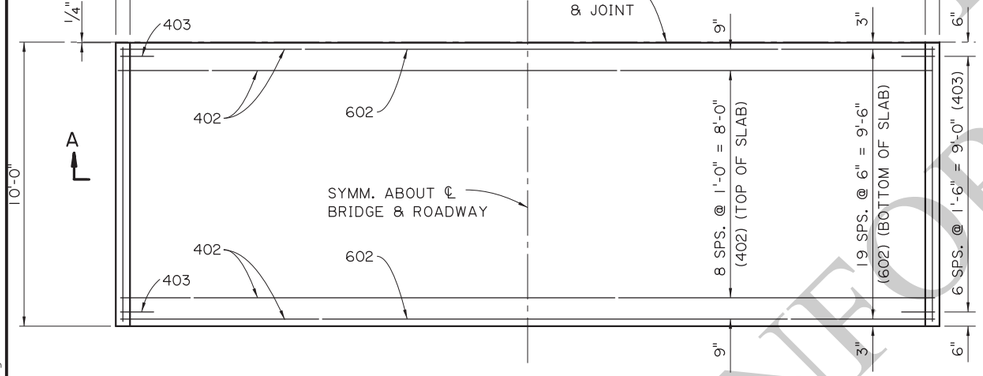

PLAN
SCALE 3/8" = 1'-0"

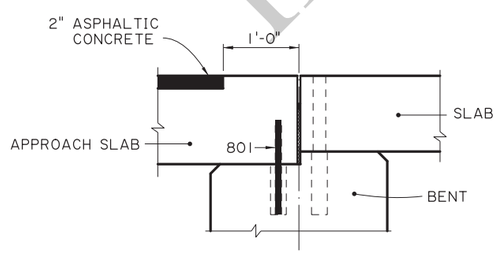

DETAIL A
SCALE : 1" = 1'-0"
(ASPHALT CONCRETE PAVEMENT OPTION)

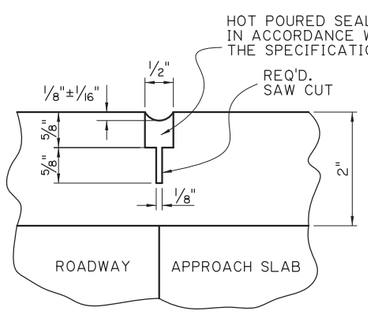

SAWING & SEALING JOINT DETAIL
N.T.S.

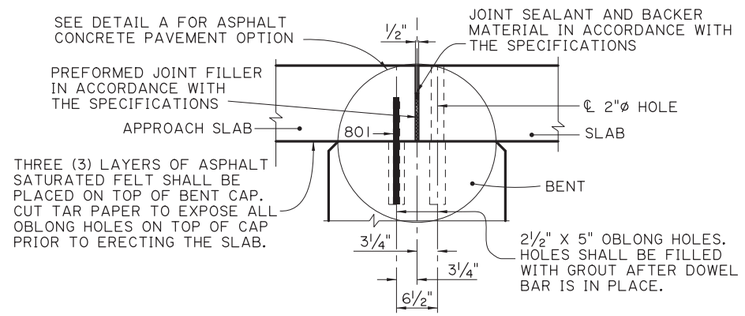

TYPICAL JOINT DETAIL
SCALE : 1" = 1'-0"

NOTE: FOR ADDITIONAL JOINT DETAILS SEE SHEET 2 OF 11

SHEET NUMBER
PARISH | CONTROL SECTION | STATE PROJECT
DESIGN B. DELATTE | CHECK J. NAKHLEH | DETAIL D. HYMEL | CHECK J. NAKHLEH | REVIEW | SERIES # 11 OF 11
APPROVED BY CHIEF ENGINEER: DATE: 12/10/2025
NO. | DATE | REVISION OR CHANGE ORDER DESCRIPTION | BY

STATE OF LOUISIANA

ALTERNATE APPROACH SLAB
10'-0" CAST-IN-PLACE
28'-0" CLEAR ROADWAY
90° CROSSING TWO WAY TANGENT
PSS-90-28-20SL

DOTD LOUISIANA DEPARTMENT OF TRANSPORTATION & DEVELOPMENT

STANDARD PLAN

FOR INFORMATIONAL USE

11/24/2025 16:2:
IP_PWP:d1246420\SS9028altaprslab(LRFD).dgn

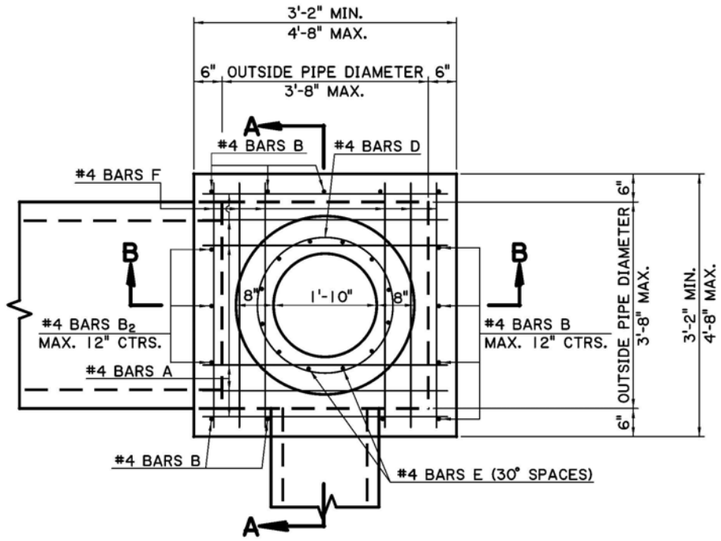

PLAN

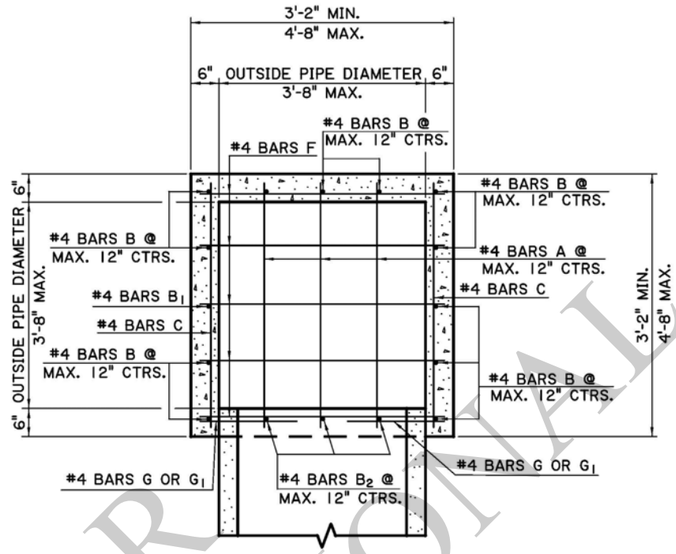

SECTION C-C

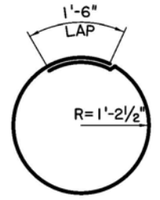

#4 BAR D

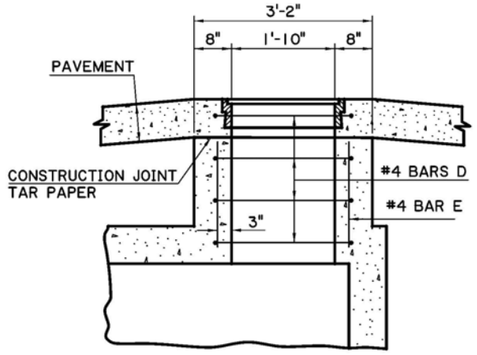

DETAIL A

(MANHOLE IN PAVEMENT AREA)

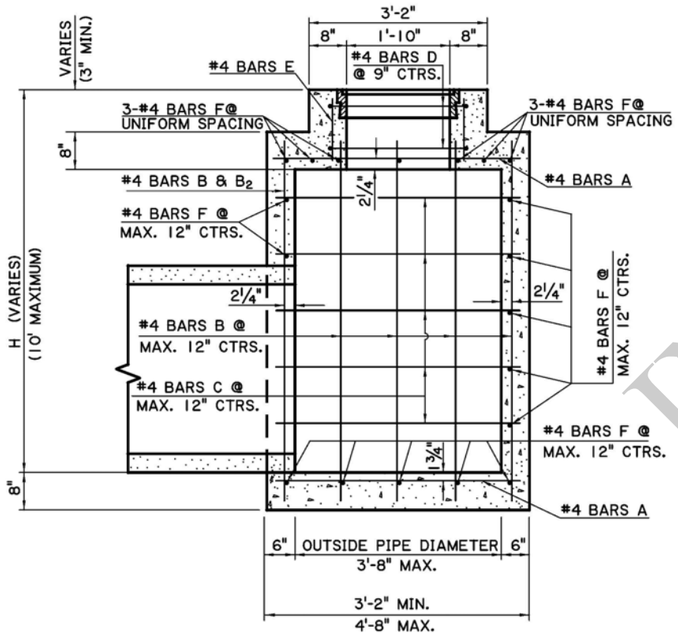

SECTION B-B

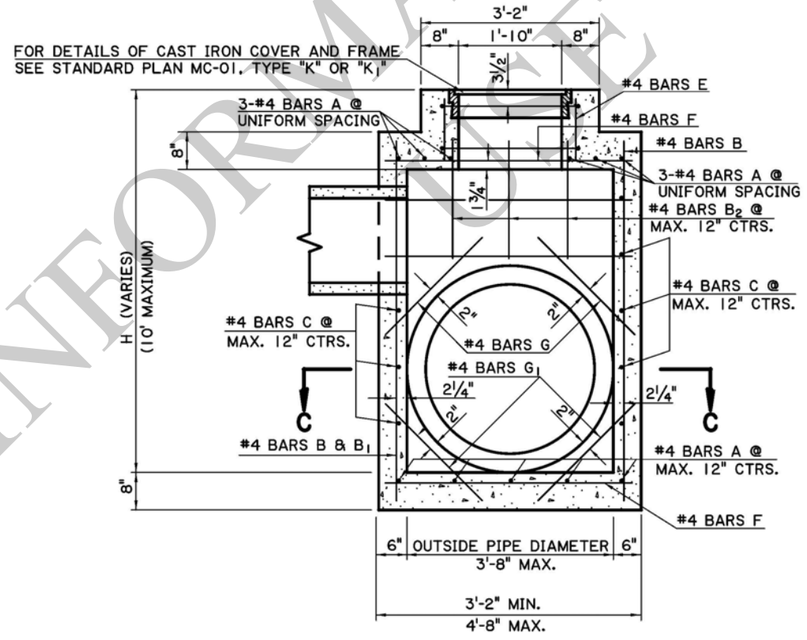

SECTION A-A

GENERAL NOTES:

1. MANHOLE IS DESIGNED ACCORDING TO 4TH ED. 2007 AASHTO LRFD PROCEDURES. SECTION 702 OF THE DOTD STANDARD SPECIFICATIONS SHALL APPLY.
2. CONCRETE: ALL CONCRETE SHALL BE CLASS "M" MINOR STRUCTURE. ALL EXPOSED EDGES SHALL BE CHAMFERED ¾ IN. EXCEPT AS NOTED.
3. REINFORCING STEEL: REINFORCING STEEL SHALL BE GRADE 60. DIMENSIONS ARE TO BAR CENTERS. MINIMUM COVER FOR REINFORCING BARS SHALL BE 2 IN. CLEAR UNLESS SHOWN OTHERWISE.
4. SEE "DETAIL A" FOR DETAILS OF MANHOLE IN A PAVEMENT AREA.
5. THE CONTRACTOR WILL NOT POUR ABOVE THE BOTTOM OF THE SLAB UNTIL THE PAVING ADJACENT TO THE MANHOLE HAS BEEN COMPLETED.

FOR INFORMATIONAL USE

SHEET NUMBER

PARISH | CONTROL SECTION | STATE PROJECT

DESIGN Q.A. HESTER | CHECK J.B. SMART | DETAIL Q.A. HESTER | CHECK T.B. SMART | REVIEW | SERIES # 1 OF 1

APPROVED BY CHIEF ENGINEER: DATE: 6/1/2026

NO. | DATE | REVISION OR CHANGE ORDER DESCRIPTION | BY

STATE OF LOUISIANA DEPARTMENT OF TRANSPORTATION AND DEVELOPMENT

CONCRETE MANHOLE
MAX. PIPES: 36" RCP X 36" RCP
MAX. DEPTH: 10'

R-CB-11

DOTD LOUISIANA DEPARTMENT OF TRANSPORTATION & DEVELOPMENT

STANDARD PLAN

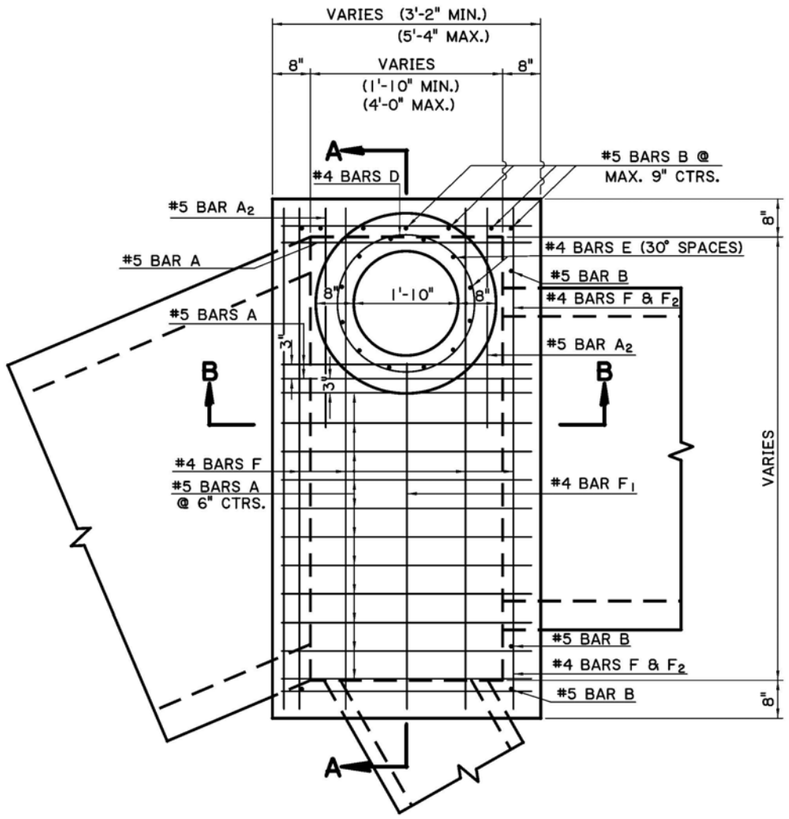

PLAN

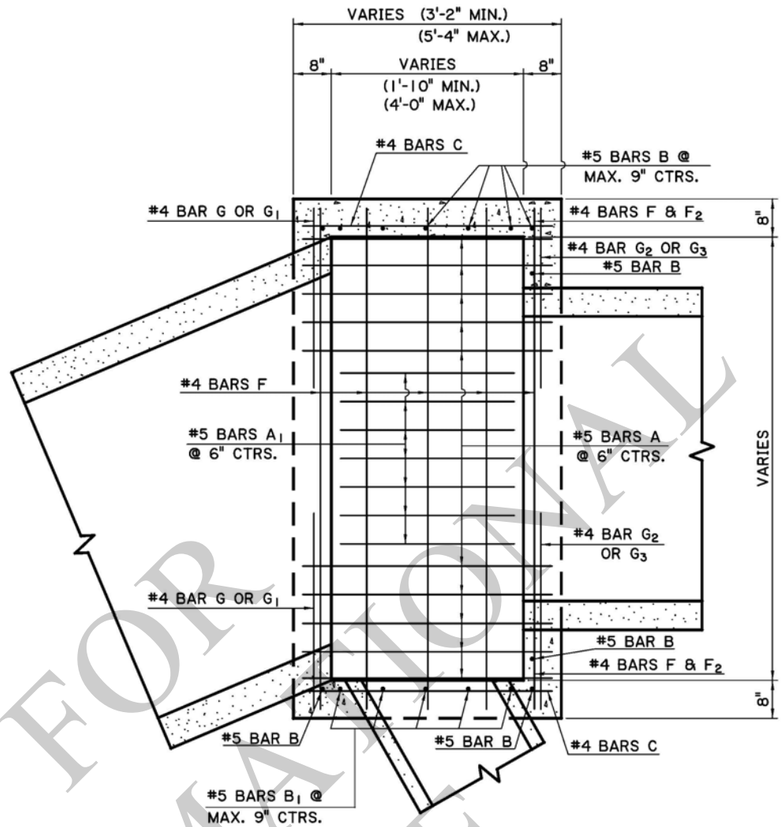

SECTION C-C

GENERAL NOTES:

1. MANHOLE IS DESIGNED ACCORDING TO 4TH ED. 2007 AASHTO LRFD PROCEDURES. SECTION 702 OF THE DOTD STANDARD SPECIFICATIONS SHALL APPLY.
2. CONCRETE: ALL CONCRETE SHALL BE CLASS "M" MINOR STRUCTURE. ALL EXPOSED EDGES SHALL BE CHAMFERED ¾ IN. EXCEPT AS NOTED.
3. REINFORCING STEEL: REINFORCING STEEL SHALL BE GRADE 60. DIMENSIONS ARE TO BAR CENTERS. MINIMUM COVER FOR REINFORCING BARS SHALL BE 2 IN. CLEAR UNLESS SHOWN OTHERWISE.
4. SEE "DETAIL A" FOR DETAILS OF MANHOLE IN A PAVEMENT AREA.
5. THE CONTRACTOR WILL NOT POUR ABOVE THE BOTTOM OF THE SLAB UNTIL THE PAVING ADJACENT TO THE MANHOLE HAS BEEN COMPLETED.

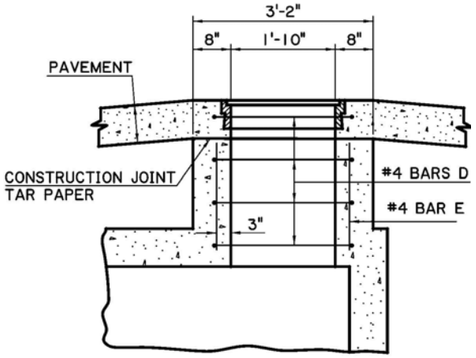

DETAIL A

(MANHOLE IN PAVEMENT AREA)

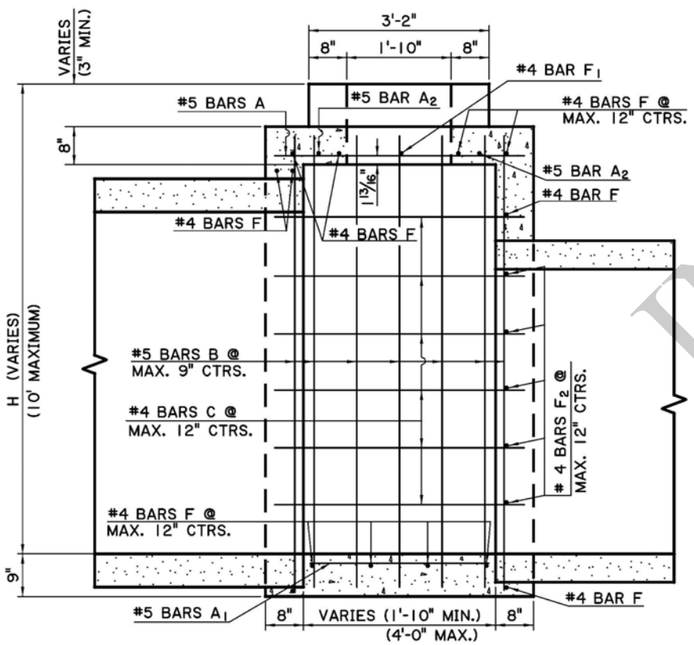

SECTION B-B

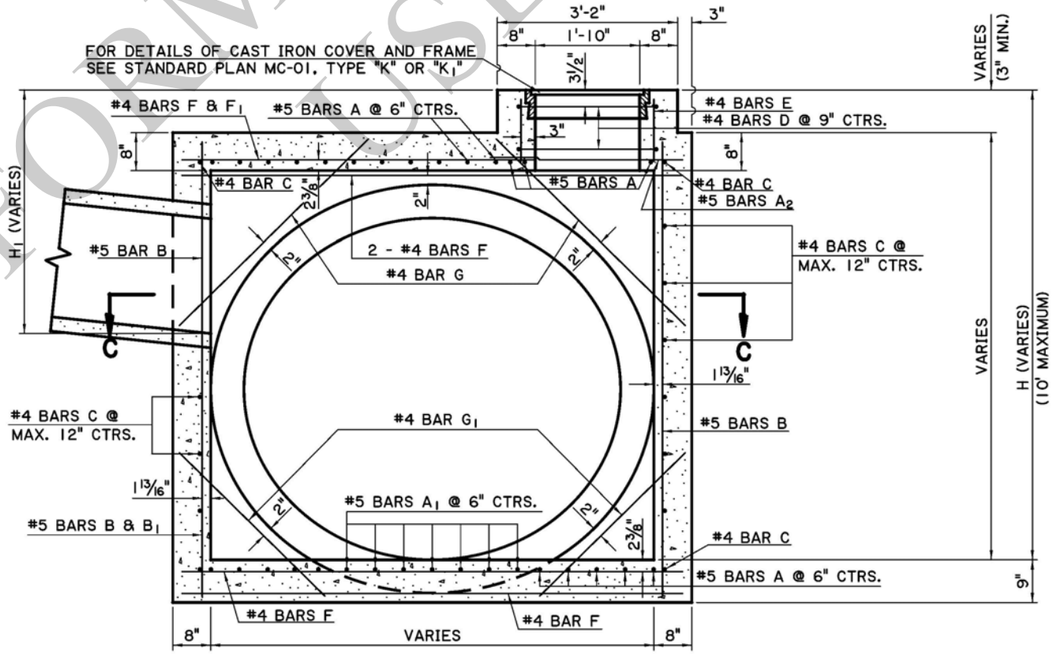

SECTION A-A

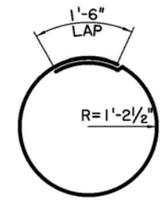

#4 BAR D

FOR INFORMATIONAL PURPOSES ONLY

SHEET NUMBER

PARISH | CONTROL SECTION | STATE PROJECT

DESIGN CHECK | DETAIL CHECK: Q.A. HESTER / C. LUSK | REVIEW | SERIES # 1 OF 1

APPROVED BY CHIEF ENGINEER: DATE: 6/1/2026

REVISION OR CHANGE ORDER DESCRIPTION | DATE | BY | NO.

STATE OF LOUISIANA

CONCRETE MANHOLE

MAX. PIPE: 36" RCP X OPEN
MAX. DEPTH: 10'

R-CB-11MOD

DOTD
LOUISIANA DEPARTMENT OF TRANSPORTATION & DEVELOPMENT

STANDARD PLAN

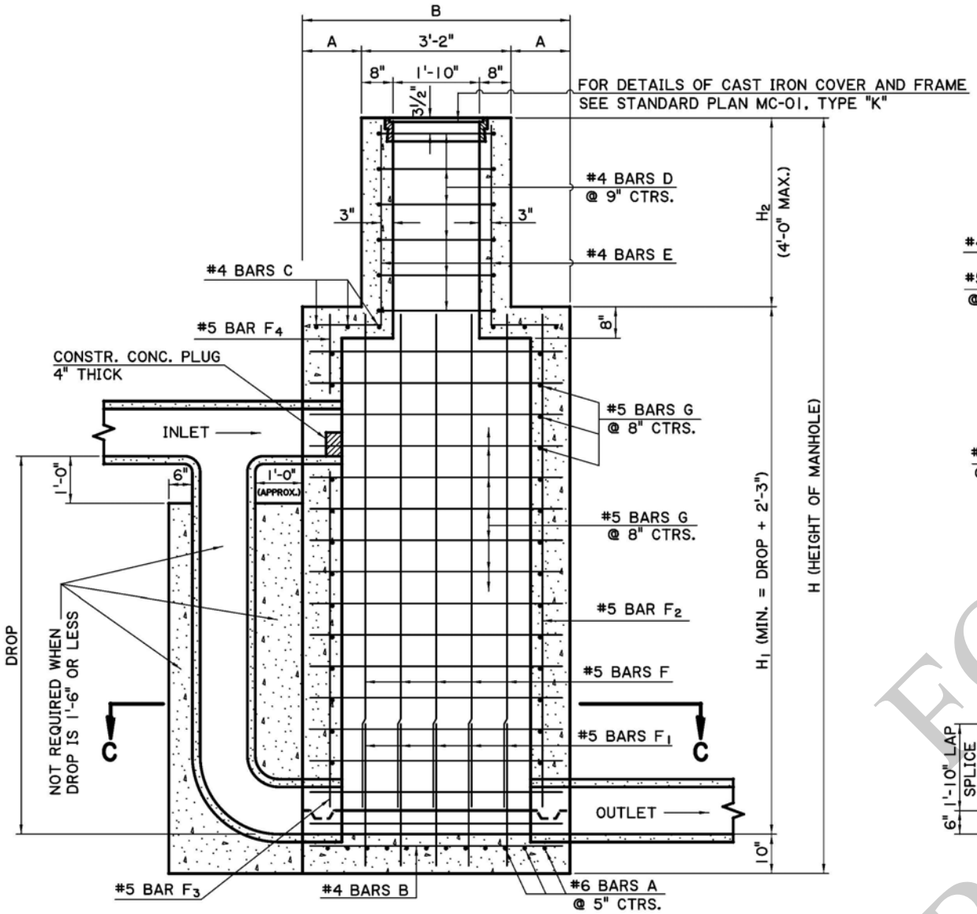

SECTION A-A

NOTE: WHEN DIFFERENCE IN F.L. ELEVATIONS OF INLET AND OUTLET (DROP) DOES NOT EXCEED 1'-6", CONNECTION OF INLET TO MANHOLE WILL BE MADE IN SAME MANNER AS THAT OF OUTLET. (VERTICAL PIPE, ELBOW AND CONCRETE ENCLOSEMENT NOT REQUIRED)

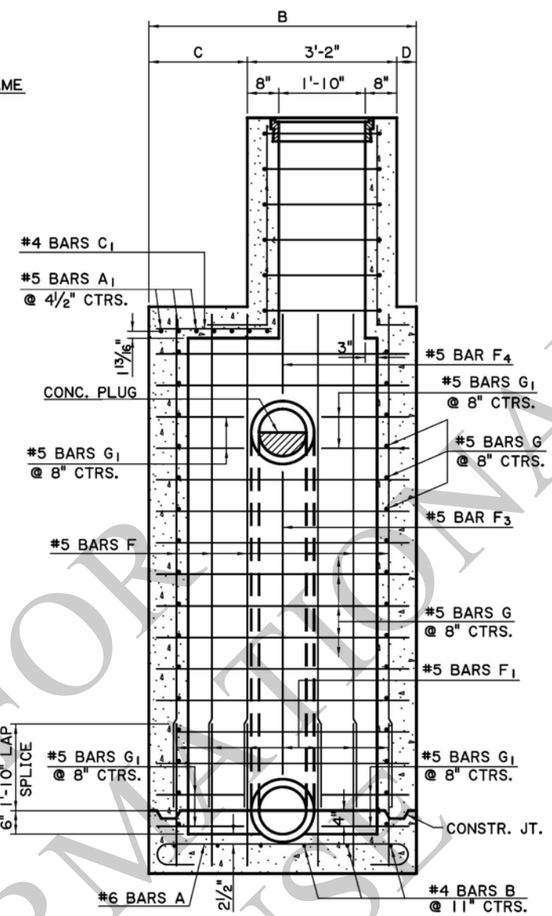

SECTION B-B

PLAN

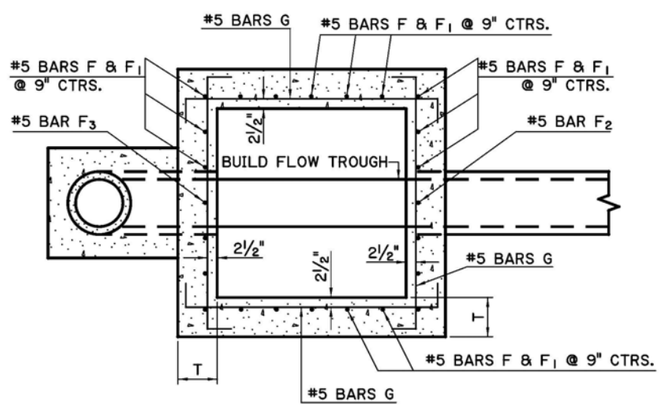

SECTION C-C

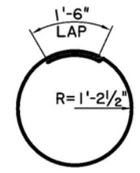

#4 BAR D

GENERAL NOTES:

1) PROJECT SPECIFICATIONS FOR MANHOLES SHALL APPLY.
2) PROJECT SPECIFICATIONS FOR REINFORCEMENT SHALL APPLY FOR FURNISHING AND PLACING REINFORCING STEEL.
3) DIMENSIONS RELATING TO REINFORCING STEEL ARE TO BAR CENTERS.
4) SEE "DETAIL A" FOR DETAILS OF MANHOLE IN A PAVEMENT AREA.

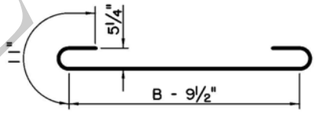

#6 BARS A

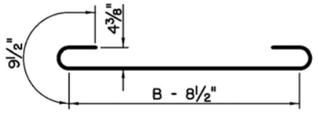

#5 BARS A₁

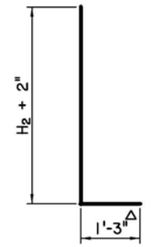

△TO BE CLIPPED FOR CLEARANCE (IF NECESSARY)

#4 BARS E

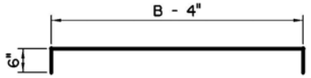

#5 BARS G

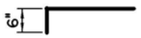

#5 BARS G₁

DIMENSIONS						
H	T	S	B	A	C	D
8' MAX.	8"	3'-6"	4'-10"	0'-10"	1'-5"	0'-3"
8'-1" - 16'	10"	4'-0"	5'-8"	1'-3"	2'-1"	0'-5"
16'-1" - 24'	12"	4'-0"	6'-0"	1'-5"	2'-3"	0'-7"

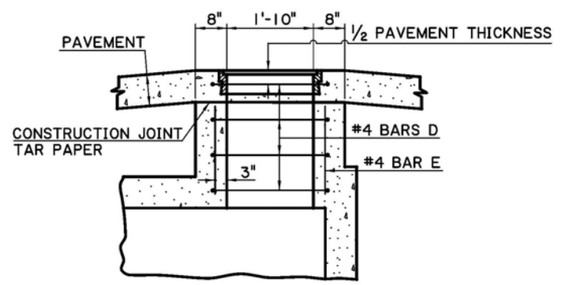

DETAIL A

(MANHOLE IN PAVEMENT AREA)

FOR INFORMATIONAL USE

SHEET NUMBER

PARISH | CONTROL SECTION | STATE PROJECT

DESIGN | CHECK | DETAIL | Q.A. HESTER | CHECK | MARCUM | REVIEW | SERIES # 1 OF 1

APPROVED BY CHIEF ENGINEER: DATE: 6/1/2026

NO. | DATE | REVISION OR CHANGE ORDER DESCRIPTION | BY

STATE OF LOUISIANA DEPARTMENT OF TRANSPORTATION AND DEVELOPMENT

R.C. MANHOLE
FOR SANITARY SEWER

R-CB-36

DOTD
LOUISIANA DEPARTMENT OF TRANSPORTATION & DEVELOPMENT

STANDARD PLAN

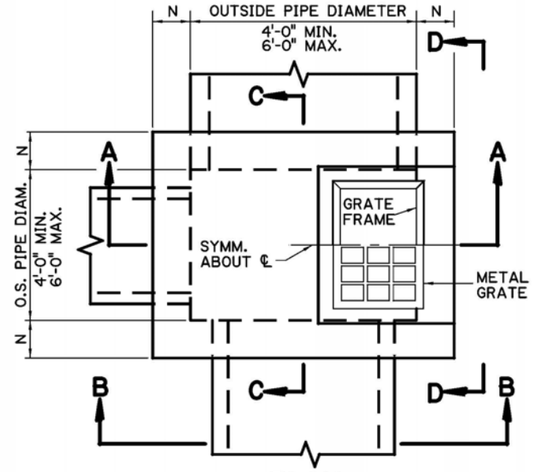

PLAN

GRATE TO BE TYPE "B" OR "C".
TYPE "B" SHOWN.

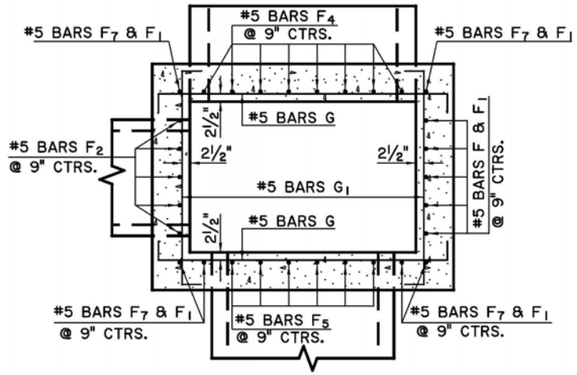

SECTION E-E

BOTTOM SLAB REINFORCING NOT SHOWN

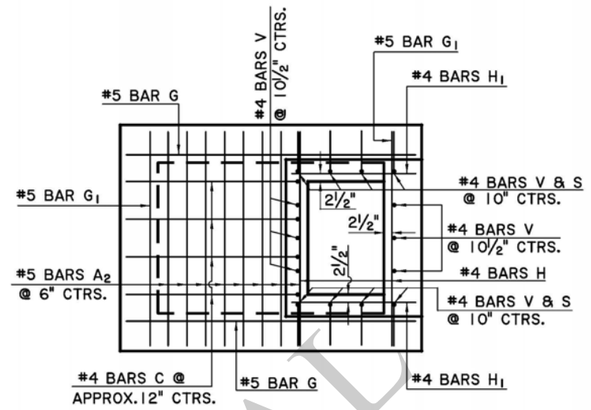

PLAN

SHOWING REINFORCING IN TOP SLAB
(FRAME AND GRATE NOT SHOWN)

GENERAL NOTES:

1) PROJECT SPECIFICATIONS FOR MANHOLES SHALL APPLY.
2) PROJECT SPECIFICATIONS FOR REINFORCEMENT SHALL APPLY FOR FURNISHING AND PLACING REINFORCING STEEL.
3) DIMENSIONS RELATING TO REINFORCING STEEL ARE TO BAR CENTERS.
4) FOR DETAILS OF GRATE AND FRAME, SEE STANDARD PLAN MC-01 (TYPE "B" OR "C"). TYPE "B" GRATE TO BE USED WHERE NO PEDESTRIAN TRAFFIC IS EXPECTED. TYPE "C" GRATE TO BE USED WHERE PEDESTRIAN TRAFFIC IS EXPECTED.

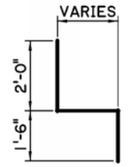

#4 BARS S

DIMENSIONS	
H	N
12'-9" TO 16'-0"	10"
16'-1" TO 24'-0"	12"

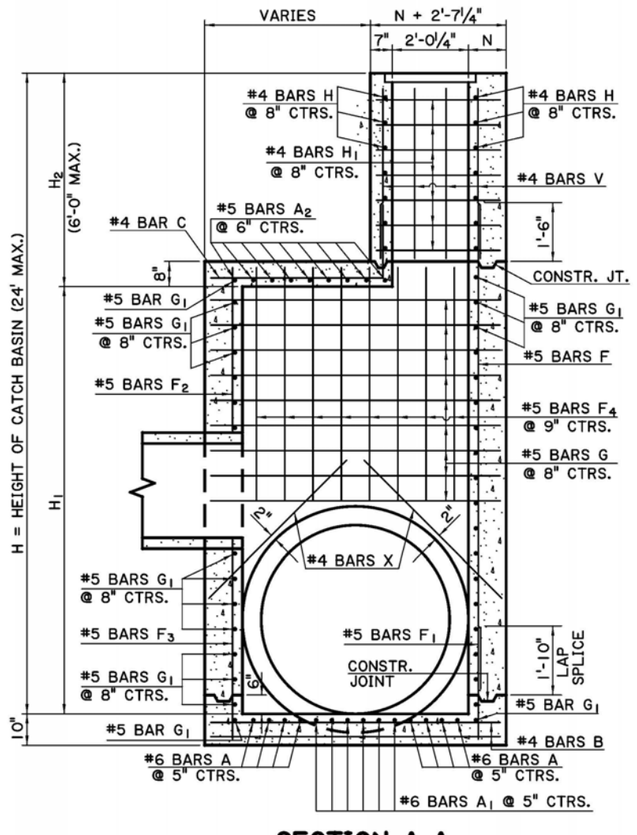

SECTION A-A

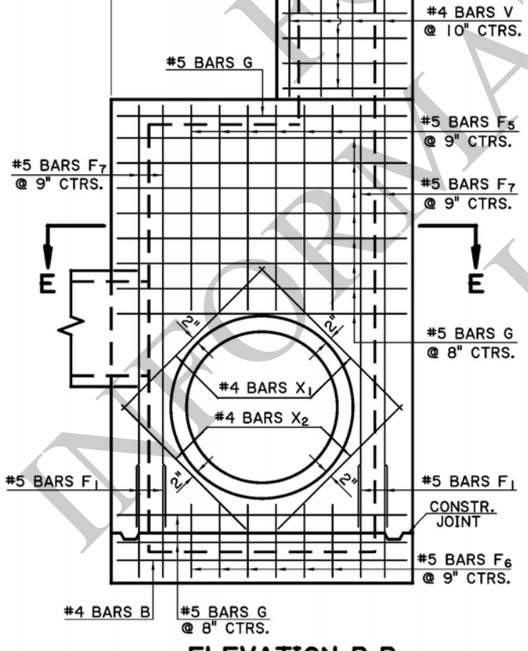

ELEVATION B-B

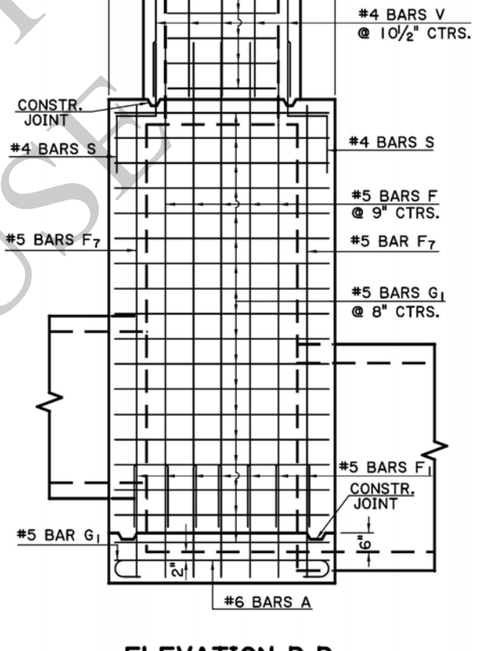

ELEVATION D-D

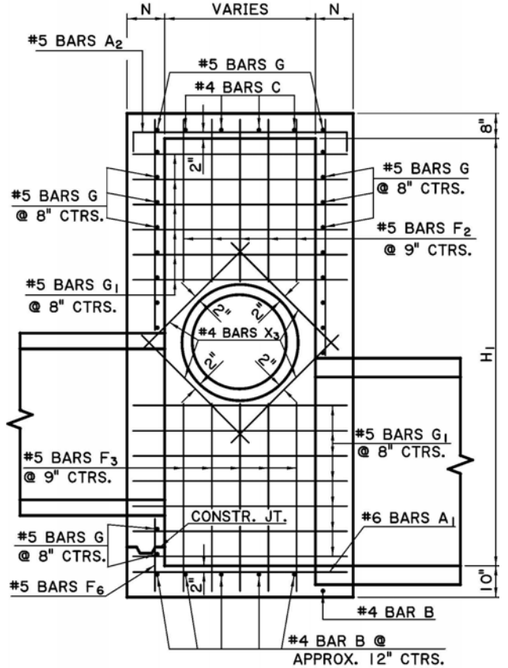

ELEVATION C-C

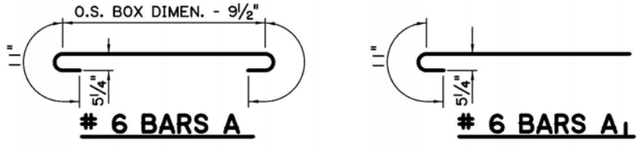

 # 6 BARS A

 # 6 BARS A1

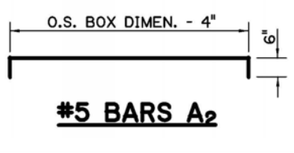

#5 BARS A2

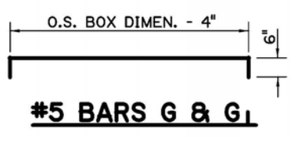

#5 BARS G & G1

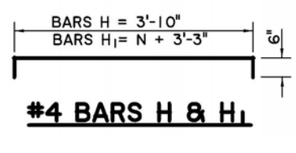

#4 BARS H & H1

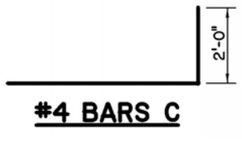

#4 BARS C

FOR INFORMATIONAL USE

SHEET NUMBER

PARISH | CONTROL SECTION | STATE PROJECT

DESIGN CHECK | DETAIL CHECK Q.A. HESTER W. MARCUM | REVIEW | SERIES # 1 OF 1

APPROVED BY CHIEF ENGINEER:

DATE: 6/1/2026

NO.	DATE	REVISION OR CHANGE ORDER DESCRIPTION	BY

STATE OF LOUISIANA DEPARTMENT OF TRANSPORTATION AND DEVELOPMENT

CONCRETE OPEN TOP CATCH BASIN

MAX. PIPES: 60" X 60"
MAX. DEPTH: 24'

R-CB-38

DOTD LOUISIANA DEPARTMENT OF TRANSPORTATION & DEVELOPMENT

STANDARD PLAN

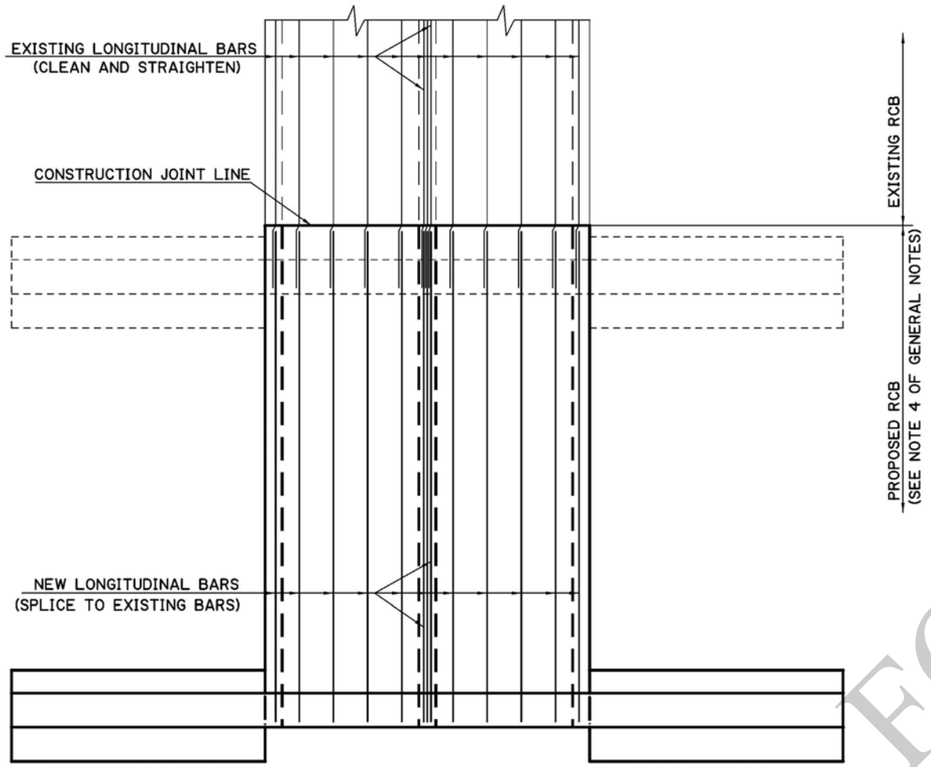

PLAN
EXISTING HEADWALL REMOVED
90° CROSSING

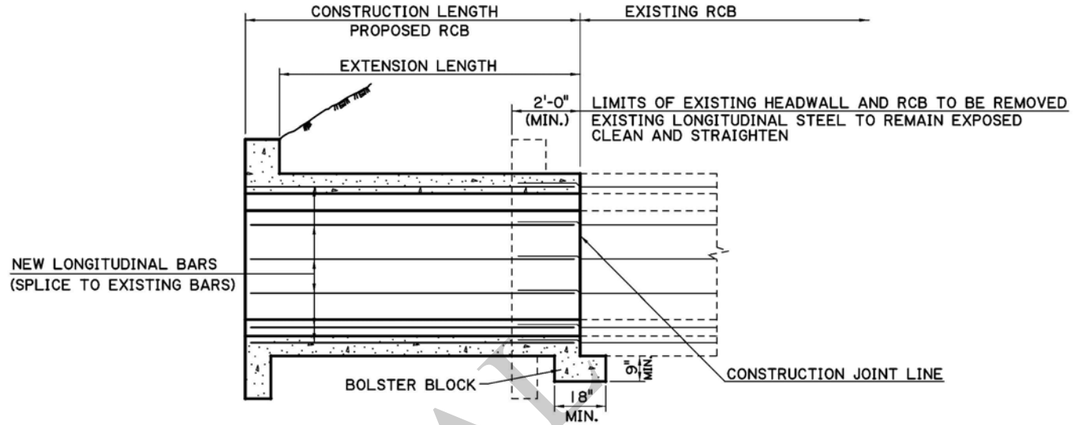

SECTION THRU BARREL
EXISTING HEADWALL REMOVED
90° AND SKEWED CROSSING

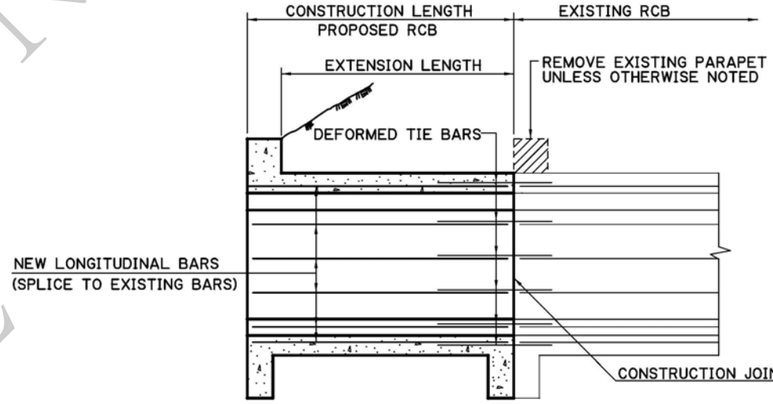

SECTION THRU BARREL
EXISTING HEADWALL REMAINS
90° AND SKEWED CROSSING

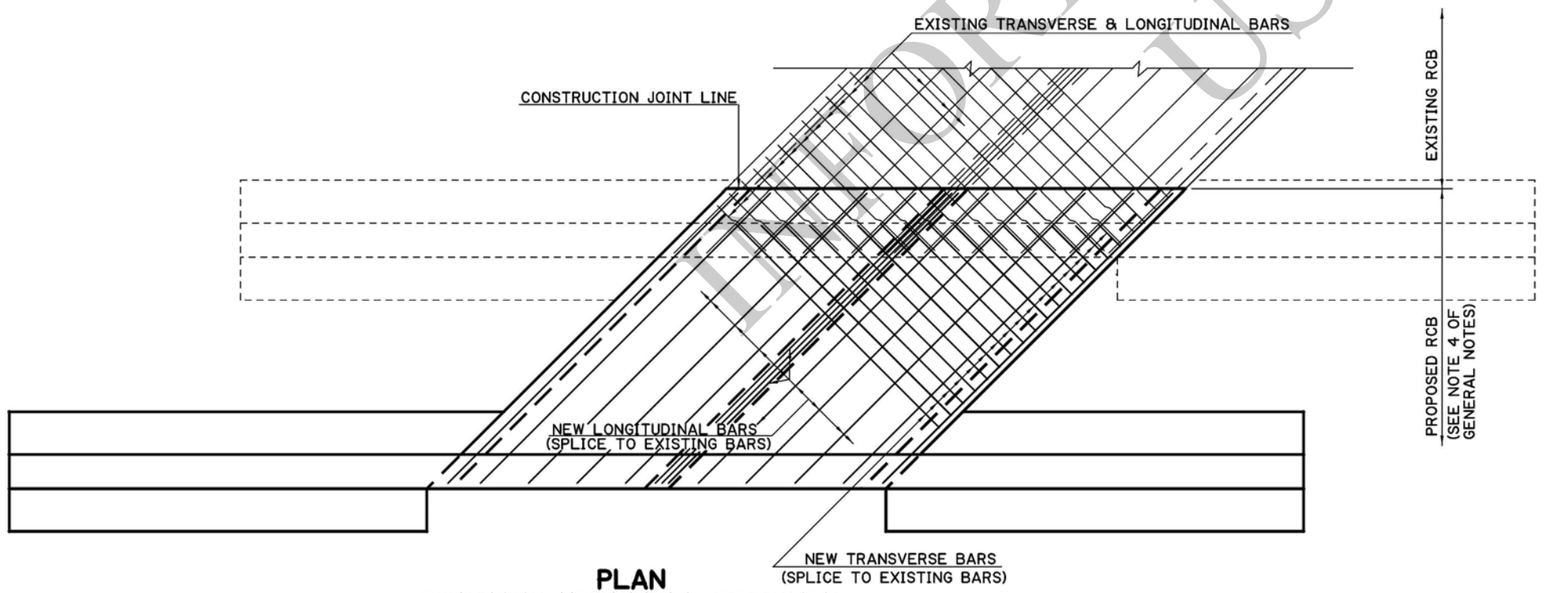

PLAN
EXISTING HEADWALL REMOVED
SKEWED CROSSING

GENERAL NOTES:

1) ALL CONCRETE TO BE CLASS "A".
2) REINFORCING STEEL TO BE GRADE 60.
3) PROJECT SPECIFICATIONS FOR REINFORCED CONCRETE BOX CULVERT SHALL APPLY.
4) ALL EXTENSIONS WILL BE CONSTRUCTED ACCORDING TO THE STANDARD PLANS OR SPECIAL DETAILS REFERRED TO ON THE SUMMARY OF DRAINAGE STRUCTURES SHEET.
5) WHERE HEADWALL AND EXISTING RCB TO BE REMOVED, PROPOSED LONGITUDINAL STEEL SHALL OVERLAP EXISTING LONGITUDINAL STEEL BY 2'-0" SPLICE. ALL EXISTING LONGITUDINAL STEEL IN SLABS AND WALLS TO BE STRAIGHTENED, CLEANED AND USED AS SPLICE BARS.
6) WHERE EXISTING HEADWALL REMAINS, DEFORMED TIE BARS ARE REQUIRED. DEFORMED TIE BARS SHALL BE #5, 3'-0" IN LENGTH (UNLESS EXTENSION LENGTH REQUIRES SHORTER BARS). HOLES WILL BE DRILLED IN THE EXISTING STRUCTURE TO ALIGN WITH CORRESPONDING LONGITUDINAL BARS IN THE NEW STRUCTURE. THE DEFORMED TIE BARS SHALL BE PLACED IN THE HOLES AND THE HOLES SHALL BE FILLED WITH AN APPROVED MATERIAL FROM QPL52, PRIOR TO POURING CONCRETE FOR THE EXTENSION. THE HOLE DIAMETER SHALL BE IN ACCORDANCE WITH THE EPOXY MANUFACTURER'S RECOMMENDATION.
7) WHERE EXISTING HEADWALL REMAINS, ALL SMOOTH END SURFACES OF EXISTING STRUCTURE SHALL BE ROUGHENED BY CHIPPING PRIOR TO POURING EXTENSION.
8) GROUND PREPARATION SHALL BE IN ACCORDANCE TO STANDARD PLAN BM-01.

FOR INFORMATIONAL USE

SHEET NUMBER

PARISH | CONTROL SECTION | STATE PROJECT

DESIGN CHECK | DETAIL KJB | CHECK JDK | REVIEW | SERIES # 1 OF 1

APPROVED BY CHIEF ENGINEER:

DATE: 6/1/2026

NO.	DATE	REVISION OR CHANGE ORDER DESCRIPTION	BY

STATE OF LOUISIANA DEPARTMENT OF TRANSPORTATION

RCB EXTENSIONS
STANDARD METHOD OF EXTENDING
REINFORCED CONCRETE BOX CULVERTS
90 AND SKEWED CROSSINGS

RCB-EXTENSION

DOTD
LOUISIANA DEPARTMENT OF TRANSPORTATION & DEVELOPMENT

STANDARD PLAN

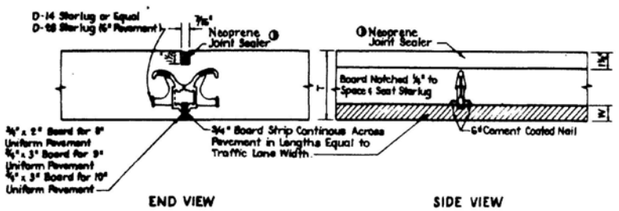

ALTERNATE TYPE OF TRANSVERSE DUMMY JOINT

D-14 STARLUG (8", 9", & 10" PAVEMENT)
D-28 STARLUG (6" PAVEMENT)

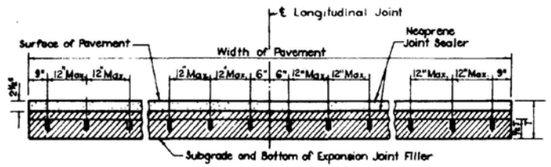

ELEVATION OF EXPANSION JOINT SHOWING SPACING OF STARLUG UNITS

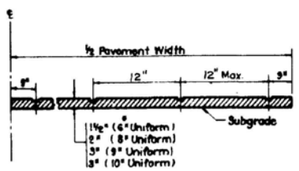

ELEVATION OF DUMMY JOINT SHOWING SPACING OF STARLUG UNITS

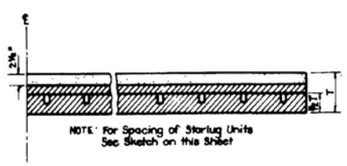

ELEVATION OF BOARD STRIP FOR EXPANSION JOINT

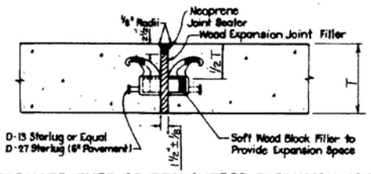

ALTERNATE TYPE OF TRANSVERSE EXPANSION JOINT

D-13 STARLUG
D-27 STARLUG (6" PAVEMENT)

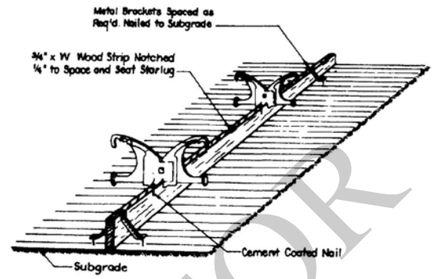

OBLIQUE VIEW OF STARLUG D-14 AND D-28 DUMMY JOINT

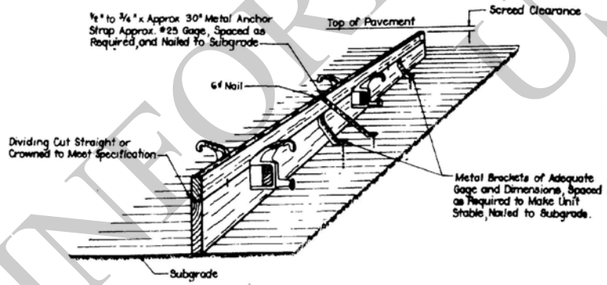

OBLIQUE VIEW OF STARLUG D-13 AND D-27 EXPANSION JOINT

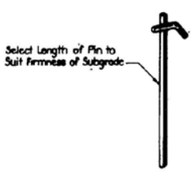

METAL BRACKET
To Be Used On Granular Bases
Spacing and Installation To Be As Directed By The Engineer.

METAL BRACKET
To Be Used On Stabilized Or Treated Bases, Shell Bases and Asphaltic Concrete Bases.

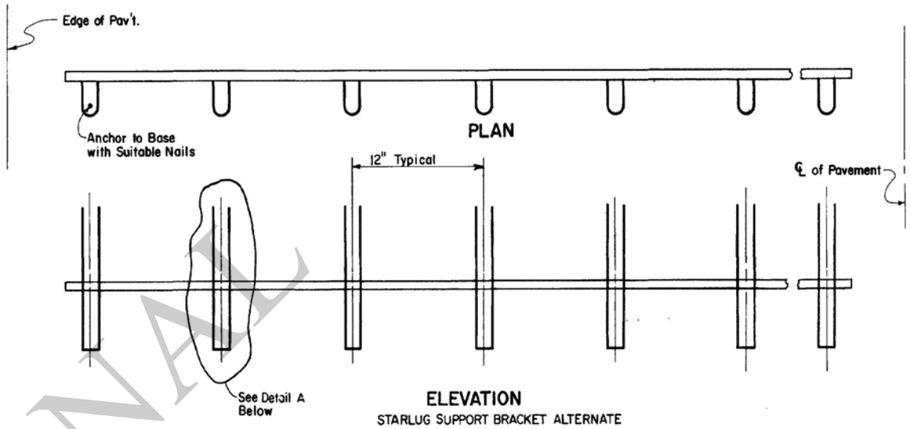

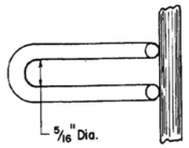

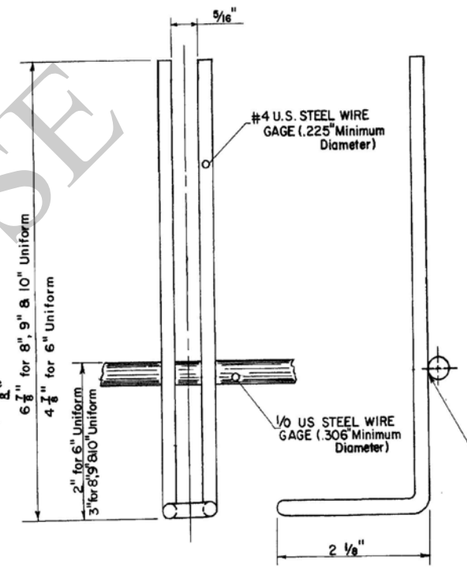

DETAIL A

GENERAL NOTES

If the Contractor Desires to Use Any Other Alternate Device, He Shall, Prior to Its Use, Secure Approval by the Engineer.

Alternate Load Transfer Devices or Dowels Shall be Installed Parallel to the Pavement Surface and Center Line.

Joint Braces or Other Suitable Devices May be Used to Align or Hold Joint Assembly in Place While Pavement Is Being Laid.

For Pavement Crowns See Typical Paving Section.

Prior to Final Assembly, Each Load Transfer Device Shall Be Tightened According to Manufacturer's Recommendations, to Prevent Excessive Movement Within the Unit Itself. The Contractor Shall Also Be Responsible for Having Each Load Transfer Device Fastened to the Wood Strip in Such a Manner as to Prevent Any Movement.

Starlug Load Transmission Assemblies Shall Be As Indicated in the "Qualified Products List".

Boards Used for Installation of Starlugs Are Subject to Tolerances of ± ⅛".

Use Type CJ or EJ Joints For End of Days Run. (See Standard Plan R-CP-108.)

Reasonable Tolerances To All Dimensions Will Be Determined By The Engineer and Furnished at Time of Installation.

For Sawed Joint Details See Standard Plan R-CP-108.

FOR INFORMATIONAL USE

SHEET NUMBER

PARISH | CONTROL SECTION | STATE PROJECT

DESIGN CHECK | DETAIL N. BRUMMETT | CHECK A. SHOWS | REVIEW | SERIES # 1 OF 1

APPROVED BY CHIEF ENGINEER: DATE: 6/1/2026

NO. | DATE | REVISION OR CHANGE ORDER DESCRIPTION | BY

STATE OF LOUISIANA DEPARTMENT OF TRANSPORTATION AND DEVELOPMENT

ALTERNATE LOAD TRANSMISSION ASSEMBLY FOR EXPANSION AND DUMMY JOINTS

R-CP-100 REV

DOTD LOUISIANA DEPARTMENT OF TRANSPORTATION & DEVELOPMENT

STANDARD PLAN

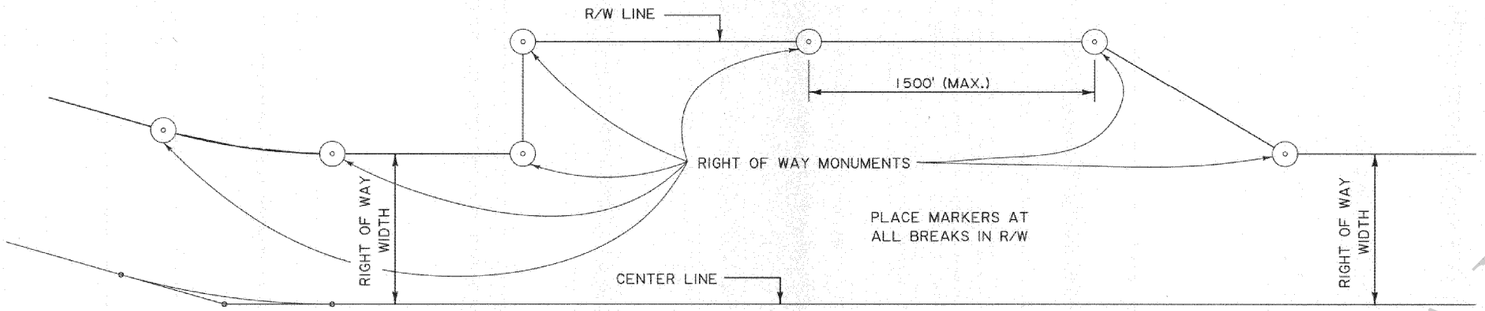

STANDARD RIGHT OF WAY MONUMENT PLAN
MONUMENTS TO BE PLACED AT RIGHT OF WAY INTERSECTIONS

NOTES:

MONUMENTS ARE TO BE PLACED AT EVERY POINT WHERE BREAKS IN THE RIGHT OF WAY OCCUR: AT P.C.'S AND P.T.'S OF CURVES AND AT TOPS OF HILLS AND AT SUCH OTHER INTERMEDIATE POINTS AS ARE NECESSARY TO PROPERLY INDICATE THE RIGHT OF WAY. MONUMENTS SHOULD NOT BE MORE THAN ONE THOUSAND FEET (1000') APART ON CURVES, NOR MORE THAN FIFTEEN HUNDRED FEET (1500') APART ON TANGENTS.

MONUMENTS ARE INDICATED ON PLANS BY THE FOLLOWING SYMBOL. ⊠

MONUMENTS SHALL BE A 1-1/2" STAINLESS STEEL CAP FASTENED TO A 5/8" (#5) STAINLESS STEEL REBAR BY A STAINLESS STEEL SLEEVE AS INDICATED BELOW.

RIGHT OF WAY MONUMENTS SHALL BE SET BY, OR UNDER THE RESPONSIBLE CHARGE OF A LOUISIANA REGISTERED PROFESSIONAL LAND SURVEYOR IN CONFORMANCE WITH CHAPTER 29, TITLE 46 PART LXI, OF THE RULES OF THE LOUISIANA PROFESSIONAL ENGINEERING AND LAND SURVEYING BOARD.

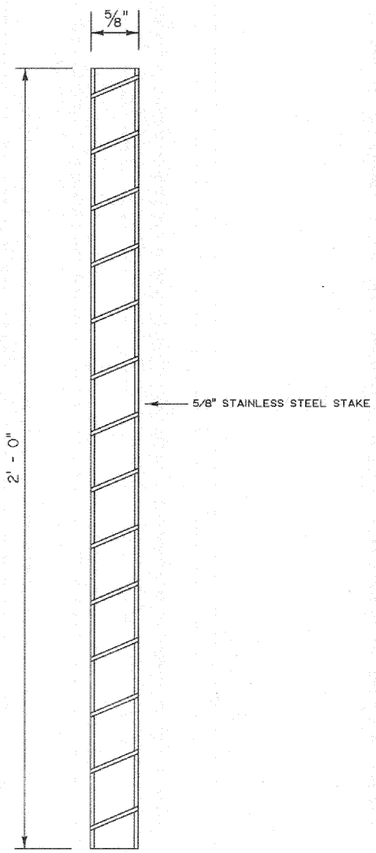

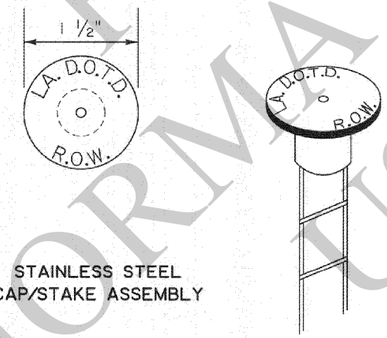

STAINLESS STEEL
CAP/STAKE ASSEMBLY

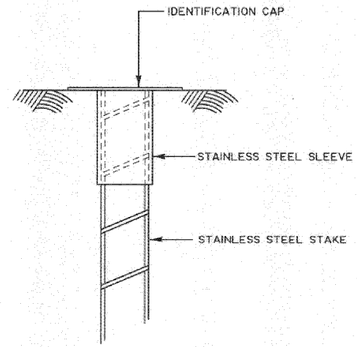

SET BOTTOM OF IDENTIFICATION CAP FLUSH
WITH THE EXISTING GROUND

FOR
INFORMATIONAL
USE

SHEET NUMBER
PARISH
CONTROL SECTION
STATE PROJECT
DESIGN CHECK
DETAIL CHECK
REVIEW
SERIES # 1 OF 1
APPROVED BY CHIEF ENGINEER:
DATE: 6/1/2026
NO. DATE REVISION OR CHANGE ORDER DESCRIPTION BY

RIGHT OF WAY
MONUMENTS
RM-01

DOTD
LOUISIANA DEPARTMENT OF TRANSPORTATION & DEVELOPMENT
STANDARD
PLAN

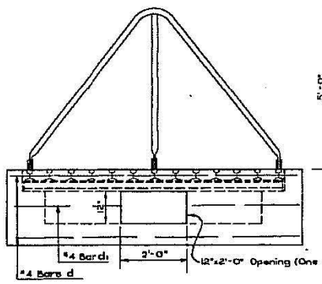

ELEVATION A-A
Showing Horizontal Steel in Wall

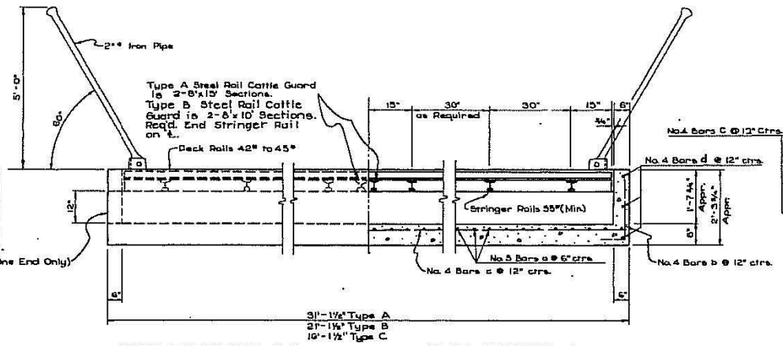

PART ELEVATION B-B

PART SECTION C-C

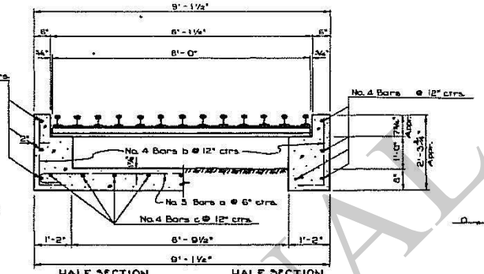

HALF SECTION WITH BOTTOM SLAB

HALF SECTION WITHOUT BOTTOM SLAB

SECTION D-D

Detail No. 5 Bars a

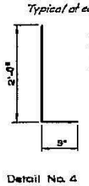

Detail No. 4 Bars b

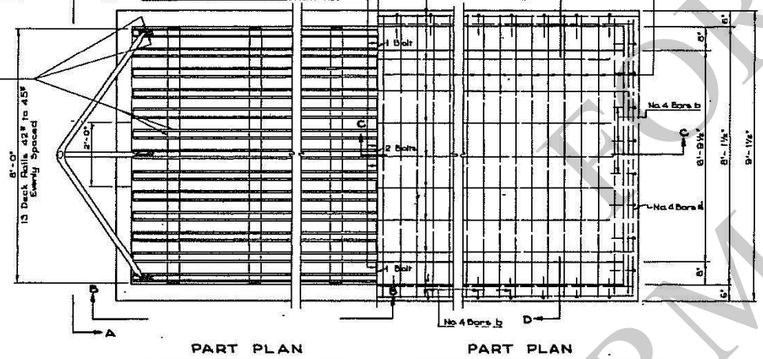

PART PLAN
Showing Steel Rail Cattle Guard

PART PLAN
Showing Reinforcing in Walls and Slab

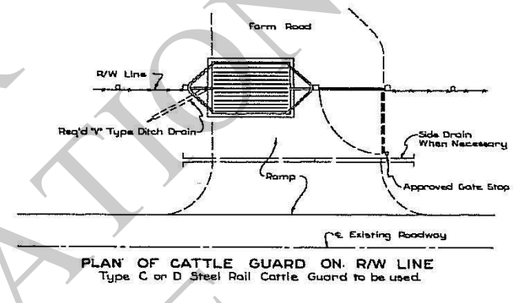

PLAN OF CATTLE GUARD ON R/W LINE
Type C or D Steel Rail Cattle Guard to be used.

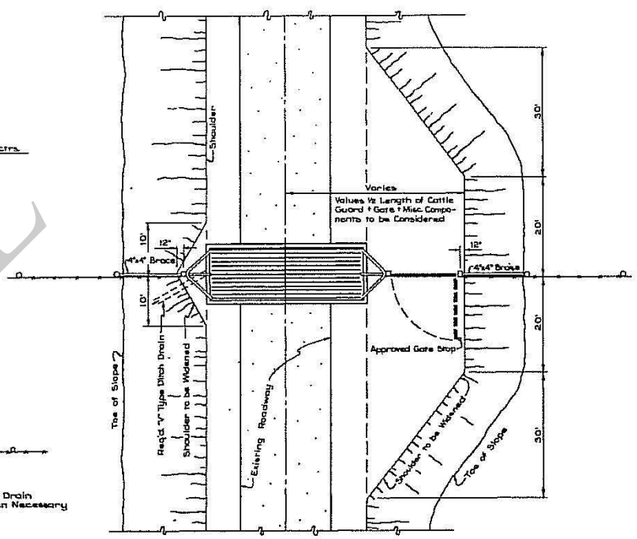

PLAN OF CATTLE GUARD
ON STATE SECONDARY OR PARISH ROADS
Type A or B Steel Rail Cattle Guard to be used.

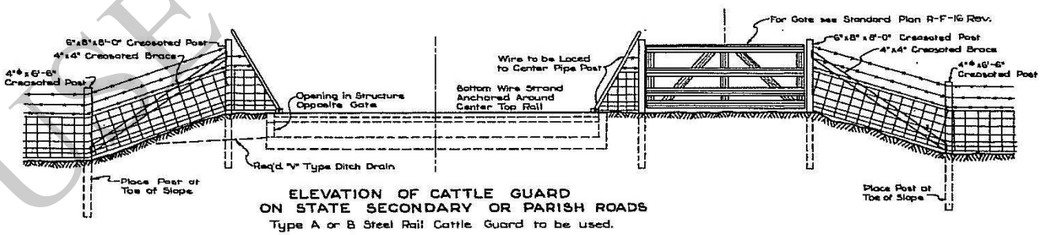

ELEVATION OF CATTLE GUARD
ON STATE SECONDARY OR PARISH ROADS
Type A or B Steel Rail Cattle Guard to be used.

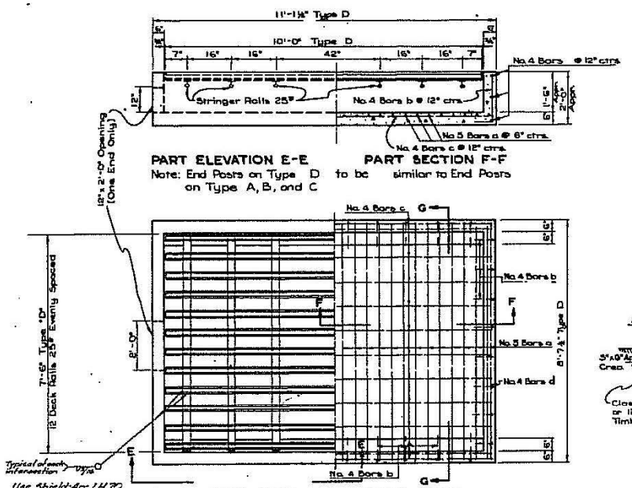

PART ELEVATION E-E
Note: End Posts on Type D to be on Type A, B, and C

PART SECTION F-F
similar to End Posts

PART PLAN

PART PLAN
Showing Reinforcing in Walls and Slab

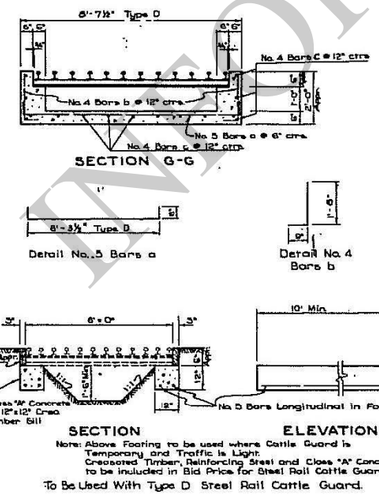

SECTION G-G

Detail No. 5 Bars a

Detail No. 4 Bars b

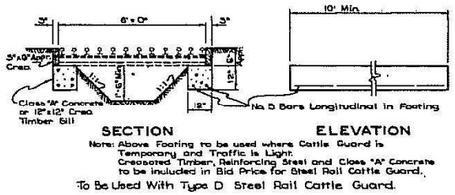

SECTION

ELEVATION

Note: Above Footing to be used where Cattle Guard is Temporary and Traffic is Light. Creosoted Timber, Reinforcing Steel and Class "A" Concrete to be included in Bid Price for Steel Rail Cattle Guard.

To Be Used With Type D Steel Rail Cattle Guard.

STEEL RAIL CATTLE GUARD		CONCRETE STRUCTURE	BILL OF MATERIAL												
			No. 5 BARS a			No. 4 BARS b			No. 4 BARS c			No. 4 BARS d			No. 4 BARS di			DEFORMED REINFORC. STEEL	FABRICATED CARBON STEEL	CLASS A CONCRETE
TYPE	DIMENSIONS	OVERALL DIMENSIONS	NO.	FT.	IN.	NO.	FT.	IN.	NO.	FT.	IN.	NO.	FT.	IN.	NO.	FT.	IN.	POUNDS	POUNDS	CU. YDS.
A	8' x 30'	9'-1½" x 31'-1½"	62	10	0	74	2	9	15	30	10	5	8	10	2	3	3	1125	* 8239	10.86
B	8' x 20'	9'-1½" x 21'-1½"	42	10	0	54	2	9	15	20	10	5	8	10	2	3	3	780	* 5607	7.50
C	8' x 15'	9'-1½" x 16'-1½"	32	10	0	44	2	9	15	15	10	5	8	10	2	3	3	607	* 3849	5.62
D	7'-6"x10'	8'-7½" x 11'-1½"	22	9	8½	34	2	5	15	10	10	5	8	4	2	3	0	408	1375	3.16

Note: Proj. Engineer to check size of Rails and Dimensions before permitting Materials to be ordered.
Quantities shown above are for Cattle Guards with Bottom Slab.
Cattle Guard to be paid for as a Unit, Complete in Place.
Quantities shown for Fab. Carbon Steel do not include Rs, Fastenings, Bolts, Welds, etc.

* Based on 45° Deck Rails and 64° Stringer Rails.

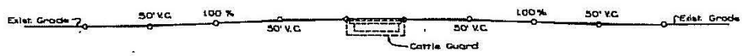

DETAIL OF APPROACHES TO CATTLE GUARD
To be used on all Gravel Roads or as directed by Project Engineer.

INFORMATIONAL USE ONLY

SHEET NUMBER

PARISH | CONTROL SECTION | STATE PROJECT

DESIGN CHECK | DETAIL CHECK | REVIEW | SERIES # 1 OF 1

APPROVED BY CHIEF ENGINEER: | DATE: 6/1/2026

NO.	DATE	REVISION OR CHANGE ORDER DESCRIPTION	BY

STATE OF LOUISIANA — DEPARTMENT OF TRANSPORTATION AND DEVELOPMENT — 1950

PORTABLE STEEL RAIL CATTLE GUARD (42# TO 45# DECK RAILS)

RM-37

DOTD — LOUISIANA DEPARTMENT OF TRANSPORTATION & DEVELOPMENT

STANDARD PLAN

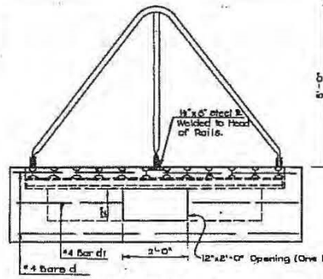

ELEVATION A-A

Showing Horizontal Steel in Wall

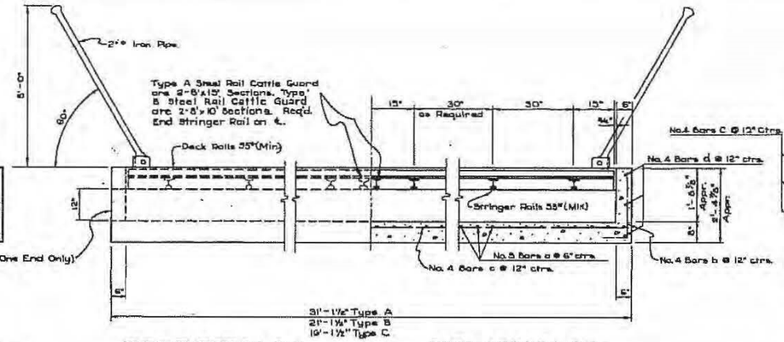

PART ELEVATION B-B

PART SECTION C-C

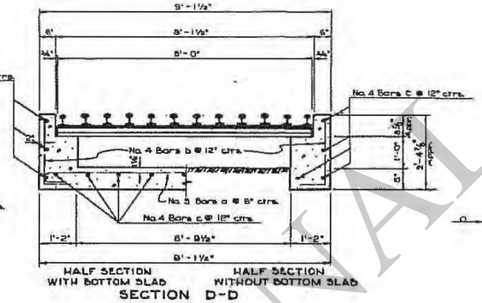

HALF SECTION WITH BOTTOM SLAB

HALF SECTION WITHOUT BOTTOM SLAB

SECTION D-D

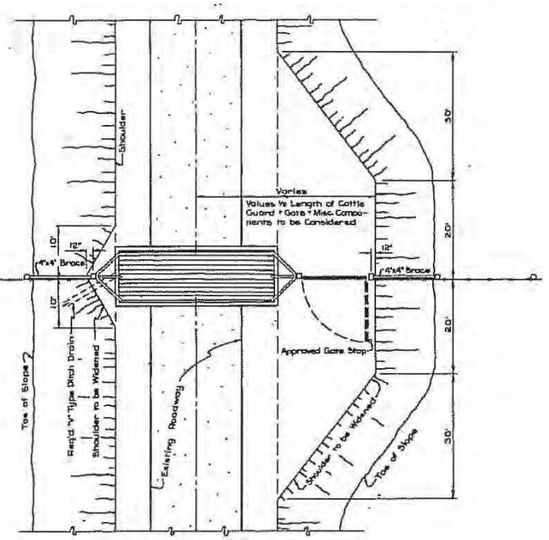

PLAN OF CATTLE GUARD ON STATE SECONDARY OR PARISH ROADS

Type A or B Steel Rail Cattle Guard to be used.

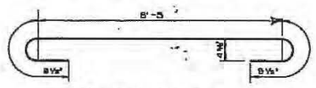

Detail No. 5 Bars a

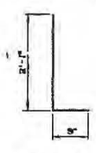

Detail No. 4 Bars b:

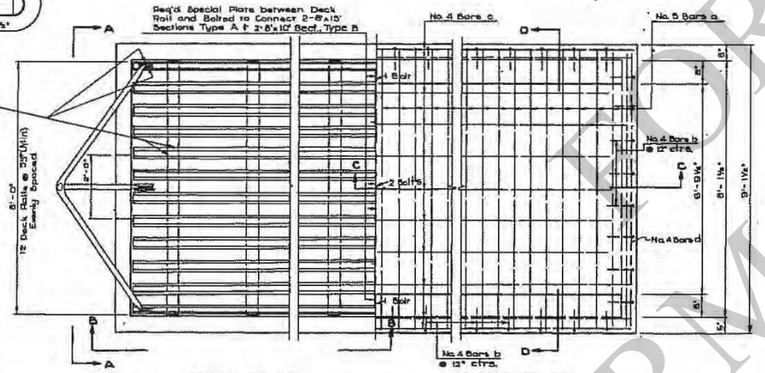

PART PLAN

Showing Steel Rail Cattle Guard

PART PLAN

Showing Reinforcing in Walls and Slab

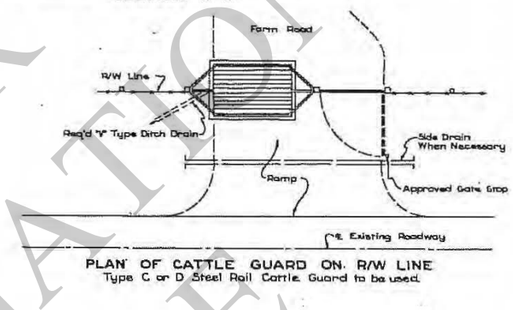

PLAN OF CATTLE GUARD ON R/W LINE

Type C or D Steel Rail Cattle Guard to be used.

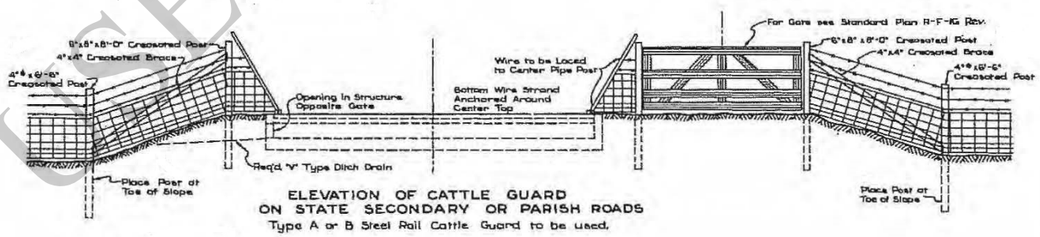

ELEVATION OF CATTLE GUARD ON STATE SECONDARY OR PARISH ROADS

Type A or B Steel Rail Cattle Guard to be used.

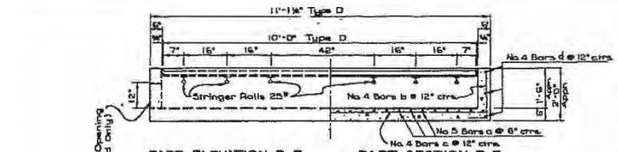

PART ELEVATION E-E

Note: End Posts on Type D to be similar to End Posts on Type A, B, and C

PART SECTION F-F

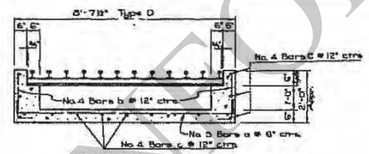

SECTION G-G

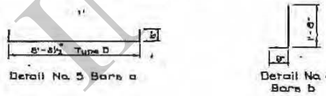

Detail No. 5 Bars a

Detail No. 4 Bars b

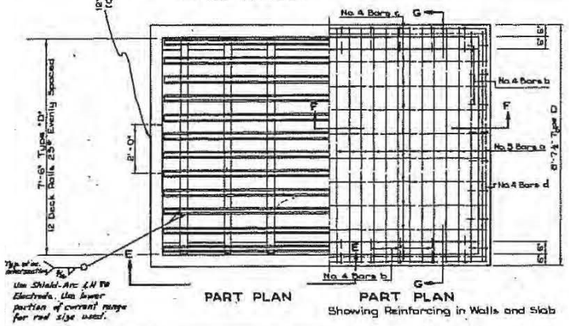

PART PLAN

PART PLAN

Showing Reinforcing in Walls and Slab

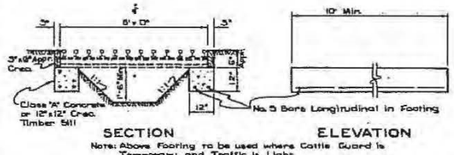

SECTION

ELEVATION

Note: Above Footing to be used where Cattle Guard is Temporary and Traffic is Light. Creosoted Timber, Reinforcing Steel and Class "A" Concrete to be included in Bid Price for Steel Rail Cattle Guard.

To Be Used With Type D Steel Rail Cattle Guard.

DETAIL OF APPROACHES TO CATTLE GUARD

To be used on all Gravel Roads or as directed by Project Engineer.

BILL OF MATERIAL

STEEL RAIL CATTLE GUARD		CONCRETE STRUCTURE	No. 5 BARS a		No. 4 BARS b		No. 4 BARS C		No. 4 BARS d		No. 4 BARS d1		DEFORMED REINFORC. STEEL	FABRICATED CARBON STEEL	CLASS A CONCRETE
TYPE	DIMENSIONS	OVERALL DIMENSIONS	NO.	FT. IN.	NO.	FT. IN.	NO.	FT. IN.	NO.	FT. IN.	NO.	FT. IN.	POUNDS	POUNDS	CU. YDS.
A	8' x 30'	9'-1½" x 31'-1½"	62	10 - 0	74	2 - 10	15	30 - 10	5	8 - 10	2	3 - 3	1130	* 10009	10.99
B	8' x 20'	9'-1½" x 21'-1½"	42	10 - 0	54	2 - 10	15	20 - 10	5	8 - 10	2	3 - 3	785	* 9827	7.60
C	8' x 15'	9'-1½" x 16'-1½"	32	10 - 0	44	2 - 10	15	15 - 10	5	8 - 10	2	3 - 3	610	* 4864	5.91
D	7'-6"x10'	8'-7½" x 11'-1½"	22	9 - 5½	34	2 - 5	15	10 - 10	5	8 - 4	2	3 - 0	408	1875	3.16

Note: Proj. Engineer to check size of Rails and Dimensions before permitting Materials to be ordered.
Quantities shown above are for Cattle Guards with Bottom Slab.
Cattle Guard to be paid for as a Unit, Complete in Place.
Quantities shown for Fab. Carbon Steel do not include Rs, Fastenings, Bolts, Welds, etc.

* Based on 64# Deck Rails and 64# Stringer Rails.

FOR INFORMATIONAL USE

SHEET NUMBER

PARISH | CONTROL SECTION | STATE PROJECT

DESIGN | CHECK | DETAIL | CHECK | REVIEW | SERIES # 1 OF 1

APPROVED BY CHIEF ENGINEER:

DATE: 6/1/2026

NO.	DATE	REVISION OR CHANGE ORDER DESCRIPTION	BY

STATE OF LOUISIANA DEPARTMENT OF TRANSPORTATION AND DEVELOPMENT

PORTABLE STEEL RAIL CATTLE GUARD (55# MIN. DECK RAILS)

RM-37 MOD

DOTD LOUISIANA DEPARTMENT OF TRANSPORTATION & DEVELOPMENT

STANDARD PLAN

9/10/2025

GENERAL NOTES - ROADSIDE TRAFFIC SIGNS

CONSTRUCTION SPECIFICATIONS: CONSTRUCTION SHALL BE IN ACCORDANCE WITH THE LOUISIANA DEPARTMENT OF TRANSPORTATION AND DEVELOPMENT, STANDARD SPECIFICATIONS FOR ROADS AND BRIDGES. LATEST EDITION EXCEPT AS SUPPLEMENTED OR AMENDED BY THE PLANS, SUPPLEMENTAL SPECIFICATIONS AND/OR SPECIAL PROVISIONS.

DESIGN SPECIFICATIONS: AASHTO STANDARD SPECIFICATIONS FOR STRUCTURAL SUPPORTS FOR HIGHWAY SIGNS, LUMINARIES AND TRAFFIC SIGNALS, 1994 AND INTERM SPECIFICATIONS.

STEEL: STEEL SHALL CONFORM TO A.S.T.M. A-709, GRADE 36. STEEL TUBING SHALL CONFORM TO THE APPLICABLE REQUIREMENTS OF A.S.T.M. DESIGNATION A-36 OR HOT-FORMED TUBING (A-501) OR PIPE (A-53) TYPE "E" OR "S", GRADE "B" OR COLD-FORMED TUBING (A-500) GRADE "B" OR "C", UNLESS OTHERWISE NOTED.

ALUMINUM: ALL ALUMINUM EXCEPT SIGN PANELS SHALL CONFORM TO ASTM B-221, B-308, OR B-429 ALLOY 6061-T6 UNLESS OTHERWISE NOTED. SIGN PANELS SHALL BE .080" THICK ALUMINUM CONFORMING TO ASTM B-209 ALLOY 5052-H38 OR 6061-T6.

CONCRETE AND REINFORCING STEEL: CONCRETE SHALL BE CLASS "M", UNLESS OTHERWISE NOTED. DIMENSIONS RELATING TO REINFORCING STEEL FABRICATION ARE OUT TO OUT OF BAR UNLESS OTHERWISE NOTED. DIMENSIONS RELATING TO REINFORCING STEEL SPACING ARE CENTER TO CENTER OF BAR OR FACE OF CONCRETE TO CENTERLINE OF BAR. REINFORCING STEEL SHALL HAVE A MINIMUM COVERING OF 2" EXCEPT WHEN CONCRETE IS CAST AGAINST THE EARTH THEN THE COVERING WILL BE 3". ALL REINFORCING STEEL SHALL BE GRADE 60. THE FIRST DIGIT OF REINFORCING BAR NUMBER INDICATES THE BAR SIZE. THE TOP EDGES OF THE FOOTING SHALL BE CHAMFERED ¾".

CONCRETE FINISH: ALL PORTIONS OF THE FOOTINGS FOR CANTILEVERS AND TRUSSES ABOVE GROUNDLINE SHALL HAVE A FINISH IN ACCORDANCE WITH LOUISIANA 805.3.060.C.

WELDING: ALL WELDING SHALL CONFORM TO THE LA. STANDARD SPECIFICATIONS, SECTION 809 AND SUPPLEMENTAL SPECIFICATIONS.

GALVANIZING: ALL STRUCTURAL STEEL AND MISCELLANEOUS STEEL SHALL BE GALVANIZED IN ACCORDANCE WITH A.S.T.M. DESIGNATION A-123. DAMAGE TO GALVANIZED SURFACES THAT ARE NOT TO BE ENCASED IN CONCRETE SHALL BE REPAIRED IN ACCORDANCE WITH LA. STANDARD SPECIFICATIONS, 811.3.050. ALL BOLTS, NUTS AND WASHERS SHALL BE GALVANIZED IN ACCORDANCE WITH A.S.T.M. DESIGNATION A-153 . ALL FIELD HOLES IN GALVANIZED MATERIAL SHALL BE TREATED WITH A COLD GALVANIZING COMPOUND FROM THE A.M.L.

BOLTS: UNLESS NOTED, ALL THREADED CONNECTIONS SHALL INCORPORATE A LOCKING DEVICE AND HAVE A MINIMUM OF 3 THREADS BEYOND THE NUTS. ALL BOLTS SHALL BE HIGH STRENGTH BOLTS, A.S.T.M. A-325, UNLESS OTHERWISE NOTED. ANCHOR BOLTS SHALL CONFORM TO AASHTO M314, GRADE 55 (OR APPROVED EQUAL) AND BE HOT DIP GALVANIZED TO A.S.T.M. A-153. STAINLESS STEEL FOR BOLTS SHALL CONFORM TO A.S.T.M. DESIGNATION A-320 B8, CLASS 2 TYPE 304, OR A-193 B8, CLASS 2 TYPE 304, UNLESS OTHERWISE NOTED. STAINLESS STEEL NUTS SHALL CONFORM TO A.S.T.M. DESIGNATION A-194, GRADE 8, TYPE 304. ALUMINUM BOLTS SHALL CONFORM TO A.S.T.M. F-468 ALLOY 2024-T4 AND NUTS ARE A.S.T.M. F-467 ALLOY 6061-T6 OR 6262-T9. WHERE BOLTS ARE USED ON BEVELED SURFACES, BEVELED WASHERS SHALL BE PROVIDED TO GIVE FULL BEARING TO THE HEAD AND/OR THE NUT.

RIVETS: ALL RIVETS SHALL BE ¼" DIAMETER BLIND RIVETS WITH POSITIVE MANDREL RETENTION. THE RIVET BODY AND MANDREL SHALL BE ALUMINUM WITH A ½" MAXIMUM DIAMETER DOME HEAD. THE RIVETS SHALL HAVE A MINIMUM ULTIMATE TENSILE STRENGTH = 875 LBS., AND CONFORM TO ASTM B-316 5056-H32.

BREAK-AWAY BASE: BASES FOR SIGNS LOCATED ADJACENT TO MORE THAN ONE ROADWAY (RAMP TERMINALS, INTERSECTIONS, ETC.) SHALL BE ORIENTED IN THE DIRECTION OF THE HIGHEST SPEED TRAFFIC. ALL MULTI-POST SIGNS WITH A DISTANCE BETWEEN POSTS OF 7'-0" CENTERS OR LESS SHALL HAVE BEVELED BASE CONNECTION. BASE CONNECTIONS SHALL BE WRAPPED PRIOR TO POURING THE FOOTING, WITH MATERIAL SUFFICIENT TO PREVENT CONCRETE SPLATTER ON THE BREAK-AWAY BASE ASSEMBLY.

ANCHOR BOLTS: ANCHOR BOLT NUTS TO BE TIGHTENED A MINIMUM ROTATION OF 240° (⅔ TURNS) FROM THE SNUG TIGHT CONDITION.

SIGN SHEETING: UNLESS OTHERWISE NOTED, ALL SIGN MATERIAL SHALL BE IN ACCORDANCE WITH SECTION 1015 IN THE STANDARD SPECIFICATIONS. IN ORDER TO OBTAIN AN ACCEPTABLE COLOR MATCH BETWEEN MULTIPLE PANELS ON A GUIDE SIGN, ALL OF THE BACKGROUND SHEETING FOR ANY GUIDE SIGN SHALL BE THE MINIMUM WIDTH OF THE LARGEST PANEL AND SHALL COME FROM THE SAME LOT OR RUN NUMBER FROM THE SHEETING MANUFACTURER UNLESS OTHERWISE APPROVED IN WRITING. RETRO-REFLECTIVE SHEETING SHALL BE APPLIED TO ALL PANELS IN SUCH A MANNER THAT THERE ARE NO HORIZONTAL SPLICES.

OVERLAY PANELS FULL SIGN OVERLAY PANELS SHALL BE IN ACCORDANCE WITH 729. PARTIAL SIGN OVERLAYS AND ALL SHIELDS SHALL HAVE SHIMS AT ALL RIVETS. SHIMS SHALL BE AT LEAST .080" THICK AND SIZED SO THEY WILL NOT EXTEND BEYOND EDGE OF OVERLAY. RIVETS SHALL BE AS SPECIFIED ON THIS STANDARD DETAIL SHEET.

SIGN LOCATIONS: FOR GROUND MOUNTED SIGN INSTALLATIONS, THE ENGINEER MAY ADJUST THE TYPE D AND E SIGN LOCATIONS INDICATED ON THE PLANS. THIS WILL BE ALLOWED TO AVOID PLACEMENT IN DEEP DITCHES, STEEP BACKSLOPES, TREE LINES, AND ANY OTHER UNACCOUNTED FOR FIELD CONDITIONS AND TO PROVIDE BETTER MESSAGE PRESENTATION. ANY ADJUSTMENTS MUST BE WITH THE CONCURRENCE OF THE GEOMETRIC DESIGN ENGINEER.

SIGN TYPES: TYPE A = SMALL SIGN WITH ONE POST; TYPE B = CLUSTER ASSEMBLY OF TYPE A SIGNS; TYPE D = LARGE RECTANGULAR SIGN ADJACENT TO TRAFFIC MOUNTED WITH MULTIPLE POSTS; TYPE E = SECONDARY SIGN (SUCH AS AN EXIT NUMBER PANEL) ATTACHED TO A LARGE RECTANGULAR PRIMARY SIGN; DELINEATOR, MILEPOST AND OBJECT MARKER SIGNS ARE NOT COVERED UNDER TRAFFIC SIGNS. SEE STANDARD PLAN HS-03.

MISCELLANEOUS: THE CONTRACTOR SHALL MARK THE DATE OF FABRICATION, SHEETING MANUFACTURER CODE, AND SIZE OF SIGN ON THE BACK OF EACH SIGN. FOR EXTRUDED PANEL SIGNS THE LETTER HEIGHT SHALL BE 2". FOR ALL OTHER FLAT SHEETING SIGNS, THE LETTER HEIGHT SHALL BE ¾". THE SIGN ID NUMBERS SHALL FOLLOW THE ABOVE REQUIREMENTS BUT SHALL HAVE A BLUE BACKGROUND WITH WHITE NUMBERS. ALL MARKINGS SHALL HAVE A CLEAR UV PROTECTIVE FILM INSTALLED OVER THEM. SEE DETAIL "A" SHEET 5 OF 17.

POST HINGE SPLICE ON MULTI-POST SIGNS WITH ALL POSTS CONNECTED BY A SECONDARY SIGN SHALL BE LOCATED BELOW THE SECONDARY SIGN. STUB POST SHALL BE ASSEMBLED TO SIGN POST WITH REQUIRED BOLTS AND ONE FLAT WASHER ON EACH BOLT BETWEEN PLATES PRIOR TO SHIPMENT. POST SPLICE SLIP PLATE SHALL BE ASSEMBLED TO MINIMUM BOLT TENSION IN SHOP PRIOR TO SHIPMENT. SIGN POST SHALL BE SHIPPED TO JOB SITE ASSEMBLED WITH ALL HARDWARE REQUIRED IN PLACE AND SECURED. EXPOSED ENDS OF ALL PIPE SHALL BE CAPPED. USE OF SECTIONS PROVIDING EQUAL OR GREATER STRENGTH FOR ANY MEMBER DESIGNATED ON THE PLANS SHALL BE SUBMITTED TO THE BRIDGE ENGINEER FOR APPROVAL.

ALL DIMENSIONS REQUIRED FOR SATISFACTORY INSTALLATION SHALL BE VERIFIED IN THE FIELD BY THE CONTRACTOR PRIOR TO THE FABRICATION. ADJUSTMENTS SHALL BE MADE AS DIRECTED BY THE ENGINEER.

ALL ALUMINUM SURFACES PLACED IN CONTACT WITH, OR FASTENED TO UNGALVANIZED STEEL MEMBERS SHALL BE THOROUGHLY COATED WITH AN APPROVED ALUMINUM IMPREGNATED CAULKING COMPOUND. PAINT ALUMINUM SECTIONS IN CONTACT WITH CONCRETE WITH A HEAVY COAT OF AN ALKALI RESISTANT BITUMINOUS PAINT OR A COAT OF ZINC CHROMATE PAINT AND ALLOW TO DRY BEFORE PLACING. ALUMINUM ALLOYS SHALL NOT BE PLACED IN CONTACT WITH COPPER, COPPER BASED ALLOYS, LEAD, OR NICKEL.

SHOP DRAWINGS: NOT REQUIRED FOR SIGN BACKING AND SMALL GROUND MOUNTED SIGN SUPPORTS, UNLESS FABRICATOR INTENDS TO DEVIATE FROM THE DETAILS HEREIN. SHOP DRAWING ARE REQUIRED FOR ALL STRUCTURE MOUNTED SIGNS.

TREE TRIMMING: THE CONTRACTOR SHALL BE RESPONSIBLE FOR MISCELLANEOUS BRUSH AND TREE TRIMMING TO ALLOW FOR FULL SIGN PRESENTATION AS DIRECTED BY THE PROJECT ENGINEER.

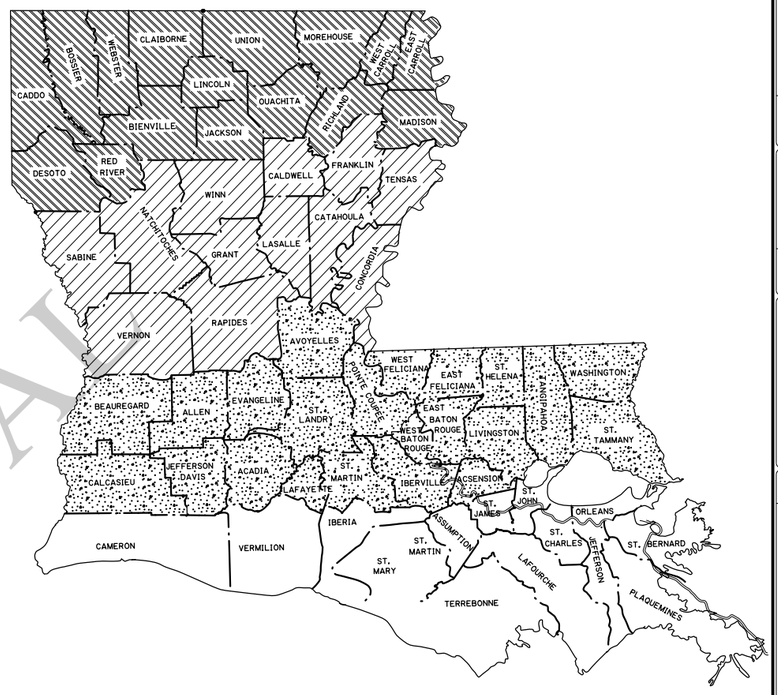

WIND LOAD MAP

WIND LOAD MAP LEGEND			
SYMBOL	ROADSIDE MOUNTED		
	ZONE	WIND VELOCITY (MPH)⊗	WIND LOAD (PSF) △
▨ ▨ ⋰	1	70	20
	2	80	27

⊗ 25 YEAR MEAN RECURRENCE INTERVAL

△ INCLUDES C_d = 1.2

SHEET	BRIDGE STANDARD INDEX NO.	DESCRIPTION
1 OF 17	BD.2.7.2.0.1	WIND LOAD MAP & GENERAL NOTES
2 OF 17	BD.2.7.2.0.2	PANEL DETAILS (TYPE A & B SIGNS)
3 OF 17	BD.2.7.2.0.3	MOUNTING DETAILS (TYPE A & B SIGNS)
4 OF 17	BD.2.7.2.0.4	SPACING OF POSTS FOR GROUND MOUNTED SIGNS
5 OF 17	BD.2.7.2.0.5	EXTRUDED ALUMINUM SIGNS (TYPE D & E SIGNS)
6 OF 17	BD.2.7.2.0.6	EXTRUDED ALUMINUM PANELS (TYPE D & E SIGNS)
7 OF 17	BD.2.7.2.0.7	ROADSIDE MOUNTED SIGNS (TYPE A, B, & D SIGNS)
8 OF 17	BD.2.7.2.0.8	ROADSIDE MOUNTED SIGN DETAILS (TYPE A & B SIGNS)
9 OF 17	BD.2.7.2.0.9	ROADSIDE MOUNTED SIGN DETAILS (TYPE D SIGNS)
10 OF 17	BD.2.7.2.0.10	SQUARE TUBE SIGN DETAILS
11 OF 17	BD.2.7.2.0.11	Z - BRACKET SIGN SUPPORT (F - SHAPE BARRIER)
12 OF 17	BD.2.7.2.0.12	Z - BRACKET SIGN SUPPORT (F - SHAPE BARRIER)
13 OF 17	BD.2.7.2.0.13	Z - BRACKET SIGN SUPPORT (POST AND RAIL BARRIER)
14 OF 17	BD.2.7.2.0.14	Z - BRACKET SIGN SUPPORT (POST AND RAIL BARRIER)
15 OF 17	BD.2.7.2.0.15	CONTRAFLOW SIGNS (GROUND MOUNTED)
16 OF 17	BD.2.7.2.0.16	CONTRAFLOW SIGNS (F - SHAPE BARRIER)
17 OF 17	BD.2.7.2.0.17	CONTRAFLOW SIGNS (POST AND RAIL BARRIER)

PRELIMINARY NOT FOR CONSTRUCTION

SHEET NUMBER

PARISH | CONTROL SECTION | STATE PROJECT

DESIGN K. BRAUNER | DETAIL K. BRAUNER | REVIEW C. BOURGEOIS
CHECK C. GUIDRY | CHECK C. GUIDRY | SERIES # 1 OF 17

APPROVED BY CHIEF ENGINEER: DATE: 10/14/2025

REVISION OR CHANGE ORDER DESCRIPTION | BY | DATE | NO.

STATE OF LOUISIANA DEPARTMENT OF TRANSPORTATION AND DEVELOPMENT

WIND LOAD MAP & GENERAL NOTES

ROADSIDE SIGNING STANDARDS

DOTD LOUISIANA DEPARTMENT OF TRANSPORTATION & DEVELOPMENT

STANDARD PLAN

9/10/2025

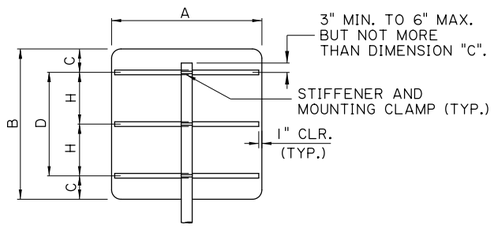

SQUARE, RECTANGLE, CIRCLE, OCTAGON AND ROUTE MARKERS

SQUARE, RECTANGLE, CIRCLE, OCTAGON AND ROUTE MARKERS					
A (IN.)	B (IN.)	C (IN.)	D (IN.)	H (IN.)	STIFFENER NUMBER REQUIRED
VARIABLE 12" TO 48"	6	3			1
	12	6			1
	15	7.5			1
	18	9			1
	24	6	12		2
	30	7.5	15		2
	36	7.5	21		2
	48	10	28		2
	60	9	42	21	3
	72	11	6 ⚠	25	3
	84	10.5	6 ⚠	21	4
48	96	12	6 ⚠	24	4

⚠ LOCATION OF BORDER ANGLE FROM EDGE

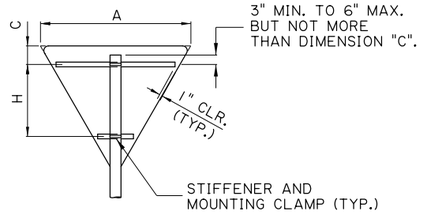

EQUILATERAL TRIANGLE

EQUILATERAL TRIANGLE			
A (IN.)	C (IN.)	H (IN.)	STIFFENER NUMBER REQUIRED
24	8		1
30	6	10	2
36	6	12.5	2
48	6	23	2
60	6	33.5	2

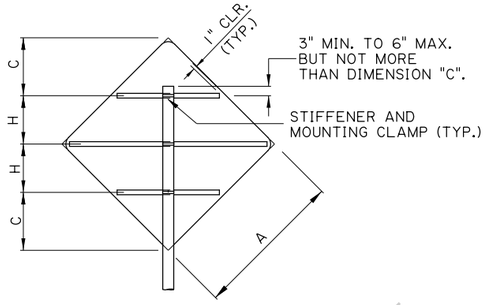

DIAMOND

DIAMOND			
A (IN.)	C (IN.)	H (IN.)	STIFFENER NUMBER REQUIRED
24	10	6.97	1
30	12	9.21	2
36	14	11.46	2
48	18.5	15.44	3
60	22.5	19.93	3

NOTES:

NO BOLTS SHALL BE PLACED THROUGH FACE OF SIGN.

ALL TRACK HEAD BOLTS SHALL HAVE HEADS DESIGNED TO FIT AND TRANSMIT LOAD TO BOLT SLOTS IN THE STIFFENER.

STIFFENERS SHALL BE ALUMINUM EXTRUSIONS AS DETAILED ON THIS SHEET UNLESS OTHERWISE NOTED.

MOUNTING CLAMPS REQUIRED AT EACH HORIZONTAL STIFFENER.

SIGN PANELS AND POSTS SHALL BE THE SIZE REQUIRED ON THE PLANS AND SUMMARY SHEET.

SEE OTHER SHEETS FOR MOUNTING DETAILS.

ALL SIGNS THAT REQUIRE BACKING SHALL BE INSTALLED WITH RIVETS.

THIS SHEET TO BE USED WITH WIND LOAD MAP AND GENERAL NOTES SHEET.

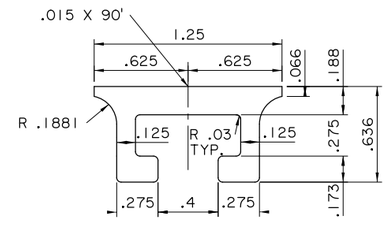

EXTRUDED CHANNEL DETAIL

TYPE A SIGNS

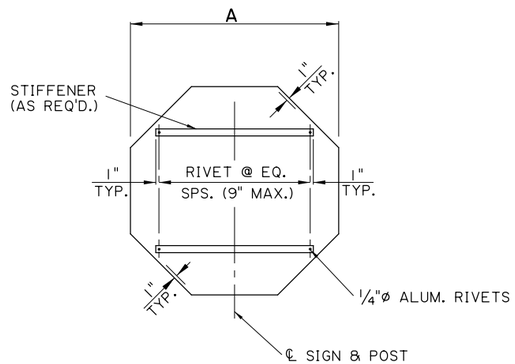

TYPICAL SIGN BACKING DETAIL

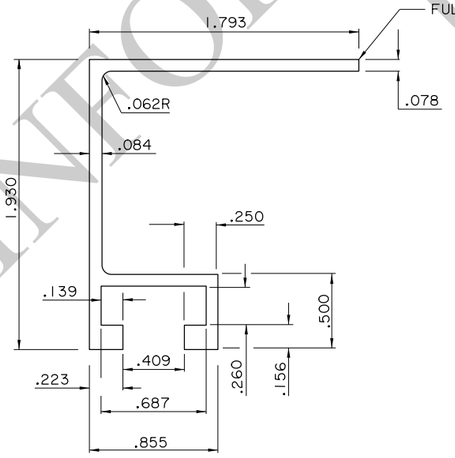

EXTRUSION STIFFENER

THIS STIFFENER REQUIRES THE USE OF RIVETS

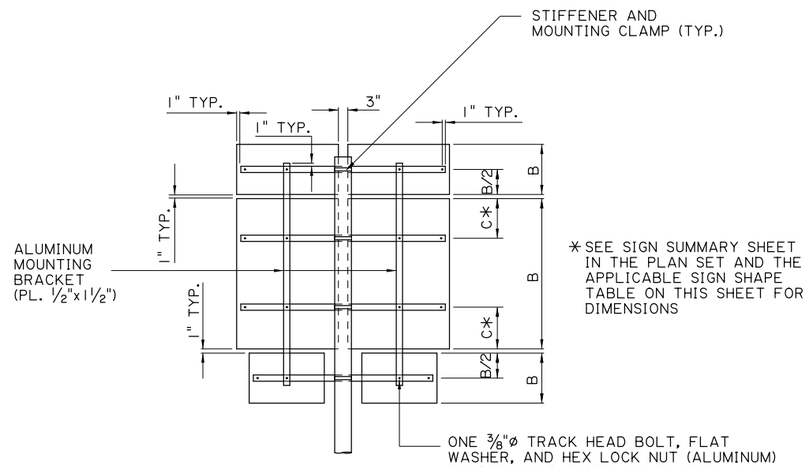

TYPE B SIGN

CLUSTER ASSEMBLY

FOR INFORMATIONAL USE

SHEET NUMBER

PARISH	CONTROL SECTION	STATE PROJECT

DESIGN	CHECK	DETAIL	CHECK	REVIEW	SERIES
K. BRAUNER	C. GUIDRY	K. BRAUNER	C. GUIDRY	C. BOURGEOIS	2 OF 17

APPROVED BY CHIEF ENGINEER: DATE: 10/14/2025

NO.	DATE	REVISION OR CHANGE ORDER DESCRIPTION	BY

STATE OF LOUISIANA

PANEL DETAILS (TYPE A & B SIGNS)

ROADSIDE SIGNING STANDARDS

DOTD LOUISIANA DEPARTMENT OF TRANSPORTATION & DEVELOPMENT

STANDARD PLAN

9/10/2025

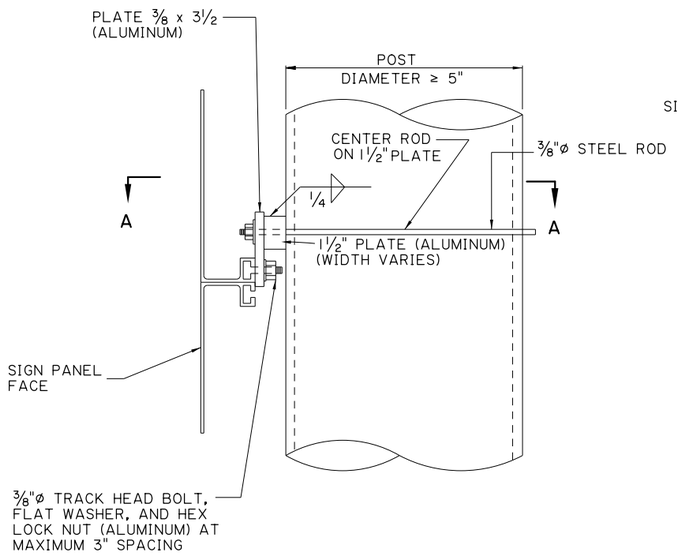

ELEVATION

(TYPICAL AT EACH STIFFENER)

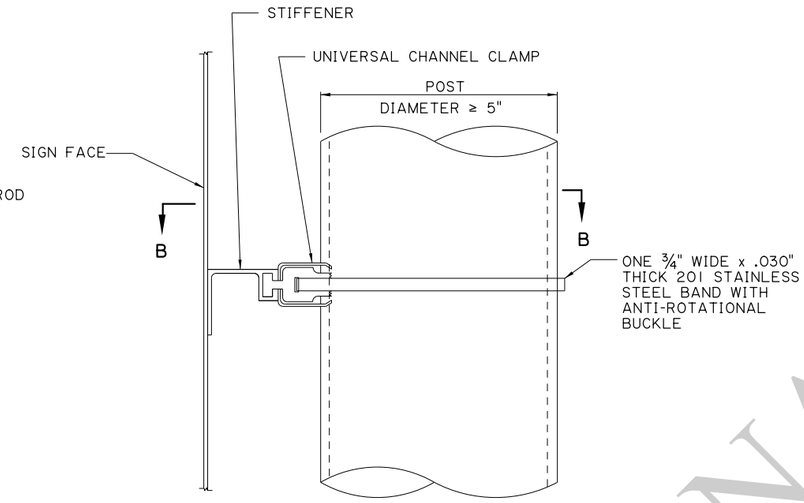

ELEVATION

TYPICAL AT EACH STIFFENER

NOTES:
NO BOLTS SHALL BE PLACED THROUGH FACE OF SIGN.

ALL TRACK HEAD BOLTS SHALL HAVE HEADS DESIGNED TO FIT AND TRANSMIT LOAD TO BOLT SLOTS IN THE STIFFENER.

MOUNTING CLAMP REQUIRED AT EACH HORIZONTAL STIFFENER.

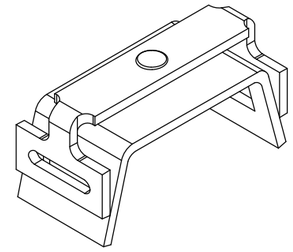

STAINLESS STEEL BANDING

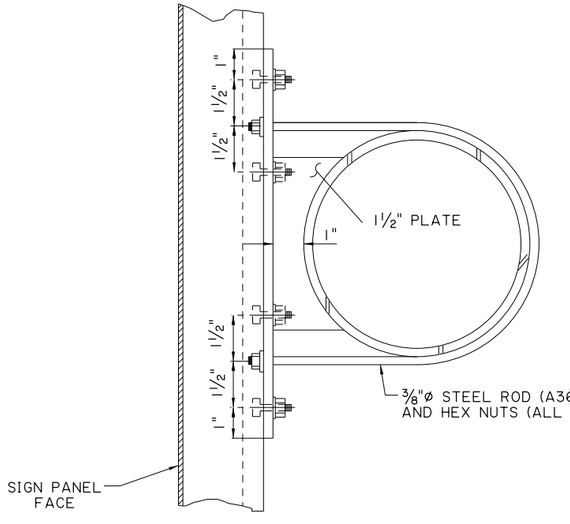

SECTION A-A

MOUNTING DETAIL (TYPE I)

FOR NON-TAPERED ROUND METAL POST
SIZES ≥ 5" DIAMETER AND SIGNS > 20 SQ. FT.

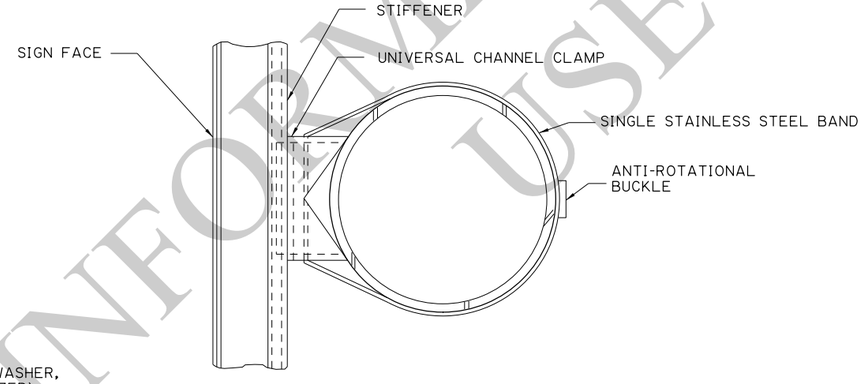

SECTION B-B

MOUNTING DETAIL (BAND TYPE)

FOR ALL POSTS ≥ 5" AND WITH SIGN AREAS
≤ 20 SQ. FT. OR LESS THAN 4 FEET WIDE

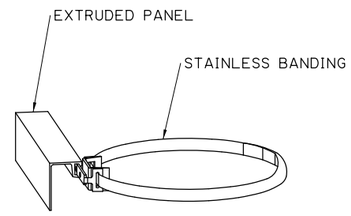

EXTRUDED PANEL BANDING CLIP

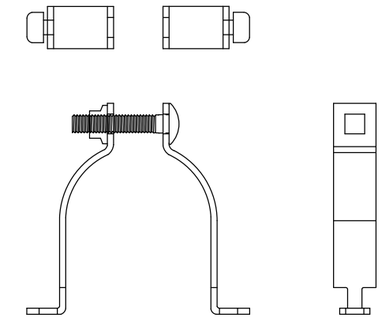

ROUND POST CLAMPS

FOR INFORMATIONAL USE

SHEET NUMBER

PARISH	CONTROL SECTION	STATE PROJECT

DESIGN	K. BRAUNER
CHECK	C. GUIDRY
DETAIL	K. BRAUNER
CHECK	C. GUIDRY
REVIEW	C. BOURGEOIS
SERIES #	3 OF 17

APPROVED BY CHIEF ENGINEER: DATE: 10/14/2025

NO.	DATE	REVISION OR CHANGE ORDER DESCRIPTION	BY

MOUNTING DETAILS
(TYPE A & B SIGNS)

ROADSIDE SIGNING STANDARDS

DOTD LOUISIANA DEPARTMENT OF TRANSPORTATION & DEVELOPMENT

STANDARD PLAN

9/10/2025

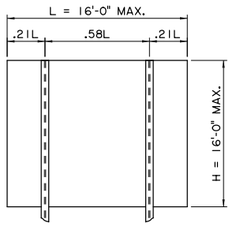

2 POSTS

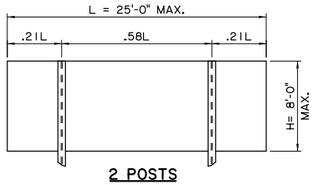

2 POSTS

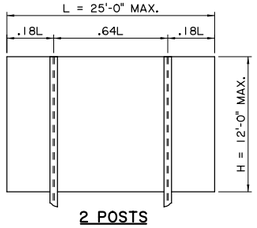

2 POSTS

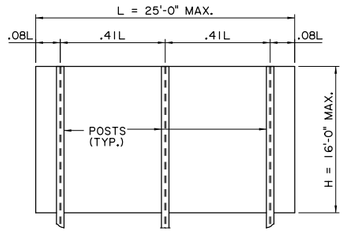

3 POSTS

SPACING OF POSTS FOR
GROUND MOUNTED SIGN INSTALLATIONS

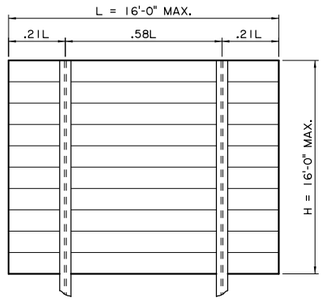

2 POSTS

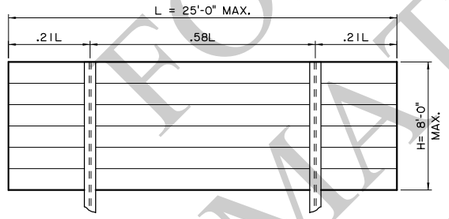

2 POSTS

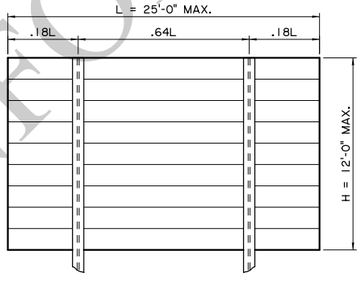

2 POSTS

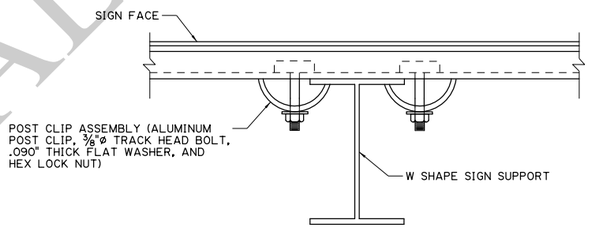

MOUNTING DETAIL (TYPE II)

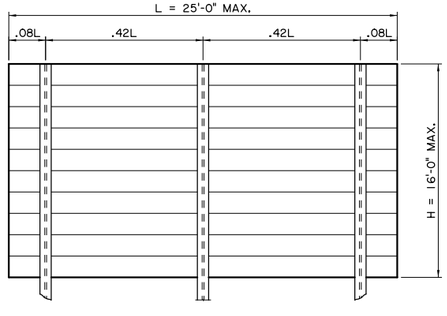

3 POSTS

FOR INFORMATIONAL USE

SHEET NUMBER		
PARISH	CONTROL SECTION	STATE PROJECT

DESIGN	K. BRAUNER	DETAIL	K. BRAUNER
CHECK	C. GUIDRY	CHECK	C. GUIDRY
		REVIEW	C. BOURGEOIS
		SERIES #	4 OF 17

APPROVED BY CHIEF ENGINEER: DATE: 10/14/2025

NO.	DATE	REVISION OR CHANGE ORDER DESCRIPTION	BY

SPACING OF POSTS FOR GROUND MOUNTED SIGNS

ROADSIDE SIGNING STANDARDS

LOUISIANA DEPARTMENT OF TRANSPORTATION & DEVELOPMENT

STANDARD PLAN

9/10/2025

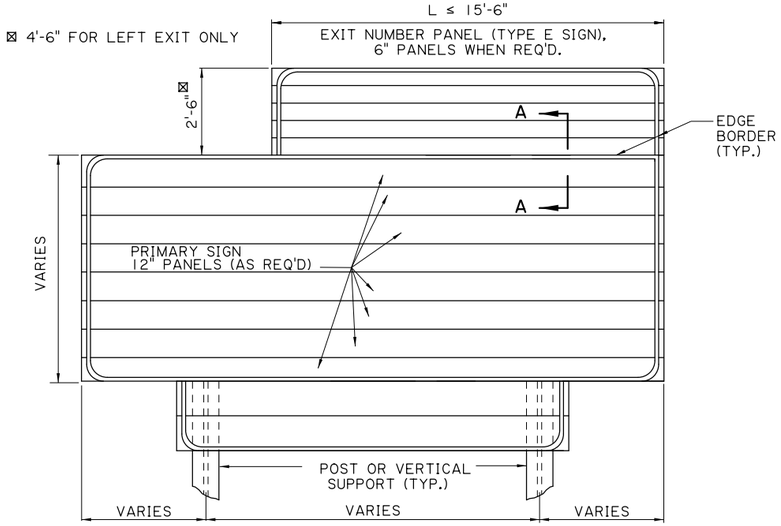

FRONT ELEVATION

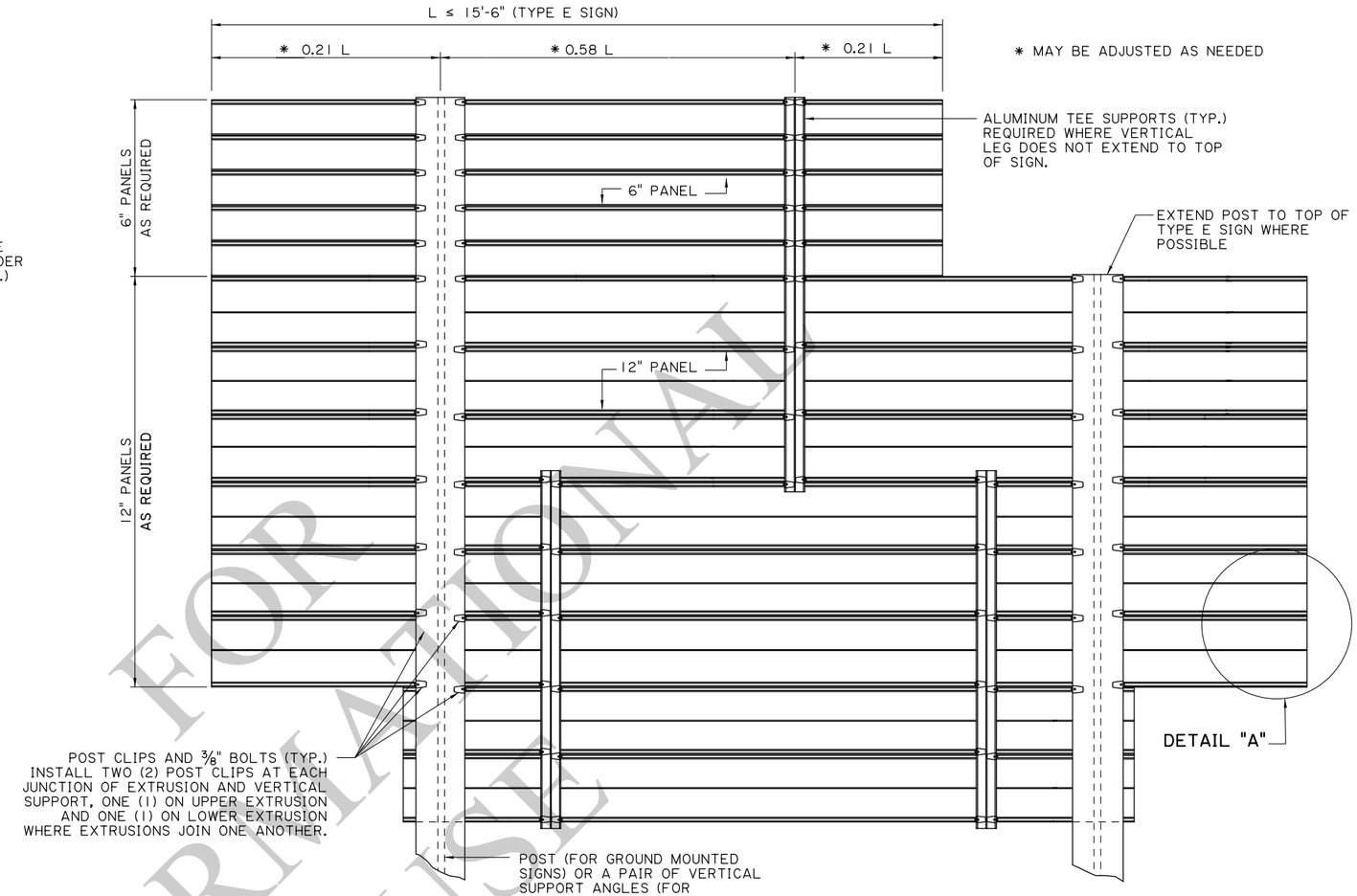

NOTES:

EXTRUDED ALUMINUM PANELS WILL BE ALLOWED AS AN ALTERNATE TO SIGN PANEL DETAILS FOR TYPE "D" AND "E" GROUND MOUNTED SIGNS ONLY. NUMBER AND SPACING OF POST SHALL MATCH THOSE SHOWN FOR PANEL DETAILS.

ALL 12" EXTRUDED ALUMINUM PANELS SHALL BE ALUMINUM ALLOY 6063-T6.
ALL POST CLIPS SHALL BE ALUMINUM ALLOY 356-T6.
ALL EXTRUDED PANEL BOLTS AND POST CLIP BOLTS SHALL BE ALUMINUM.
ALL HEX LOCK NUTS SHALL BE ALUMINUM ALLOY 2017-T4.
ALL POST CLIP BOLTS SHALL BE TORQUED TO A MINIMUM OF 175 IN-LBS.
ALL POST CLIP BOLTS SHALL HAVE HEADS DESIGNED TO FIT THE BOLT SLOTS IN THE PANELS.

TYPE E SIGNS SHALL BE ATTACHED TO PRIMARY SIGNS WITH ALUMINUM TEE SUPPORTS, (5'-1" LENGTH), POST CLIPS, POST CLIP BOLTS, AND HEX LOCK NUTS.

FOR NEW OVERHEAD SIGNS (INCLUDING FASCIA MOUNTED) INCORPORATING EXISTING MOUNTS, THE CONTRACTOR WILL PLACE VERTICAL SUPPORT ANGLES WITHOUT SPLICES THAT EXTEND THE FULL HEIGHT OF THE EXTRUDED PRIMARY SIGN PANEL.

FOR NEW TYPE D SIGNS INCORPORATING EXISTING MOUNTS, THE EXISTING POST MAY BE REUSED IF THE NEW SIGN PANEL DOES NOT EXTEND OVER 2'-0" ABOVE THE EXISTING POST. SUCH NEW SIGNS WILL BE MOUNTED TO ALUMINUM TEE SUPPORTS BEGINNING AT THE TOP OF THE SIGN AND EXTENDING DOWNWARD FROM THE TOP OF THE POST THE DISTANCE THE NEW SIGN IS ABOVE THE EXISTING POST PLUS 1'-0". ONE TEE IS REQUIRED ADJACENT TO EACH EXISTING POST AND ATTACHED WITH POST CLIPS AS SHOWN FOR NEW TYPE E SIGNS. IF THE NEW SIGN EXTENDS OVER 2'-0" ABOVE THE EXISTING POST, THE CONTRACTOR IS TO REPLACE THE EXISTING POST AND MEET DETAILS FOR NEW CONSTRUCTION.

REFLECTIVE SHEETING FOR EXTRUDED PANELS: ONLY SPLICES THAT OCCUR AS PART OF THE MANUFACTURING PROCESS SHALL BE PERMITTED. A MAXIMUM OF TWO VERTICAL SPLICES ON ANY ONE SIGN FABRICATED USING EXTRUDED PANELS, WITH ONE SPLICE PER EXTRUDED PANELS SHALL BE ALLOWED. ALL "EXIT ONLY" PANELS THAT ARE DETAILED WITH THE TOP AND/OR BOTTOM EDGE NOT AT AN EXTRUDED PANEL EDGE SHALL BE FABRICATED FROM .080" ALUMINUM AND ATTACHED AS AN OVERLAY. ALL OTHER "EXIT ONLY" PANELS SHALL BE FABRICATED BY APPLYING THE YELLOW REFLECTIVE SHEETING ON THE EXTRUDED PANELS. THE REFLECTIVE SHEETING APPLIED TO EXTRUDED PANELS SHALL EXTEND APPROXIMATELY ¼" OVER EACH SIDE AND SHALL BE ADHERED TO THE SIDE OF THE PANEL.

THIS SHEET TO BE USED WITH WIND LOAD MAP AND GENERAL NOTE SHEET.

BACK ELEVATION

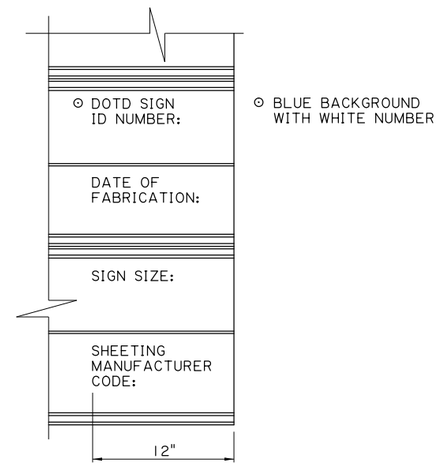

DETAIL "A"

2" LETTERING IN LAST 12" OF SIGN, SEE MISCELLANEOUS NOTE ON GENERAL NOTE SHEET OF TRAFFIC SIGN DETAILS.

FOR INFORMATIONAL USE

SHEET NUMBER

PARISH	CONTROL SECTION	STATE PROJECT

DESIGN	K. BRAUNER
CHECK	C. GUIDRY
DETAIL	K. BRAUNER
CHECK	C. GUIDRY
REVIEW	C. BOURGEOIS
SERIES #	5 OF 17

APPROVED BY CHIEF ENGINEER:

DATE: 10/14/2025

NO.	DATE	REVISION OR CHANGE ORDER DESCRIPTION	BY

STATE OF LOUISIANA DEPARTMENT OF TRANSPORTATION AND DEVELOPMENT

EXTRUDED ALUMINUM SIGNS (TYPE D & E SIGNS)

ROADSIDE SIGNING STANDARDS

DOTD LOUISIANA DEPARTMENT OF TRANSPORTATION & DEVELOPMENT

STANDARD PLAN

9/10/2025

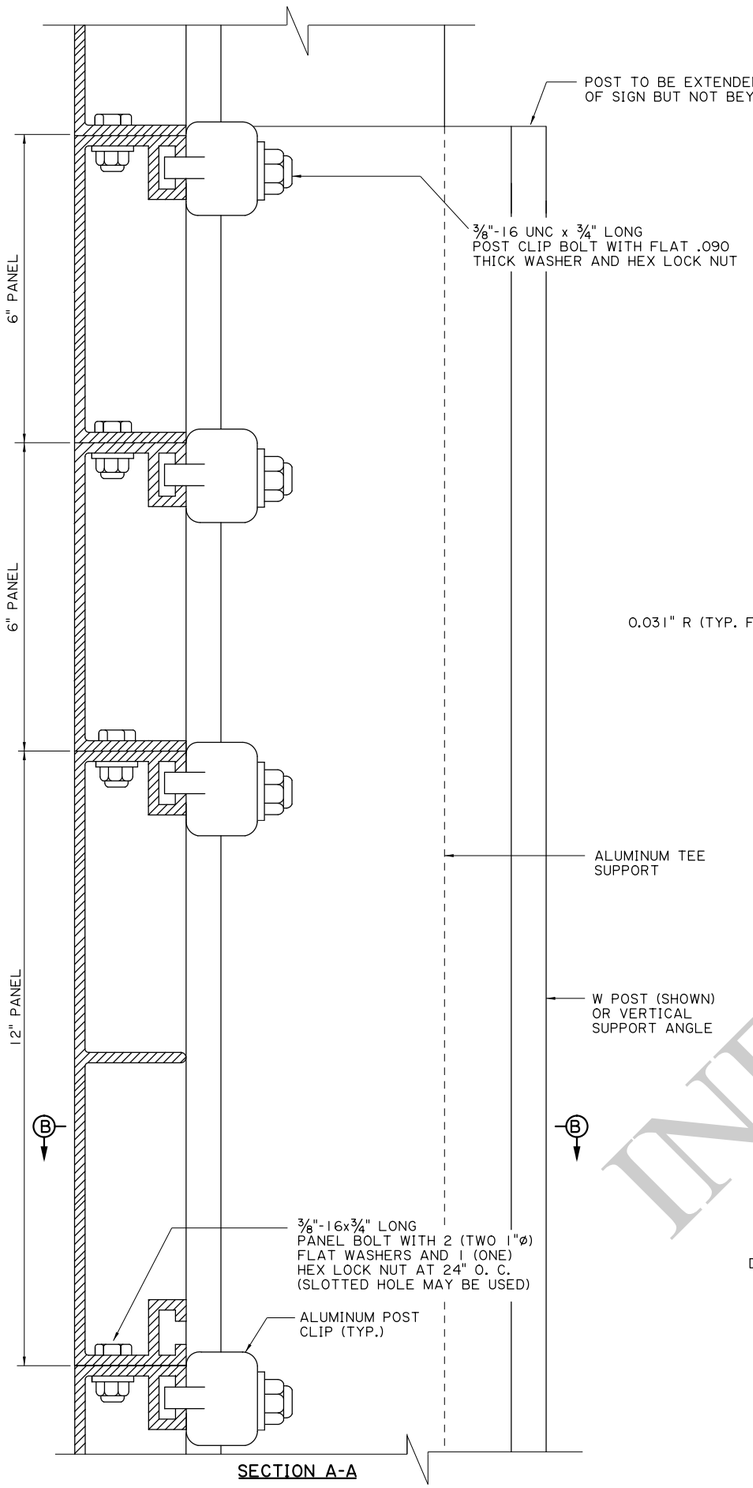

SECTION A-A

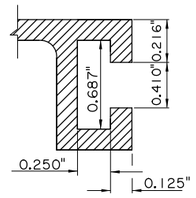

DETAIL "A"

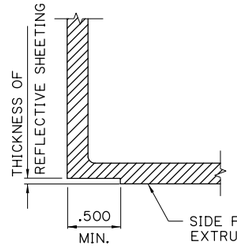

DETAIL "B"

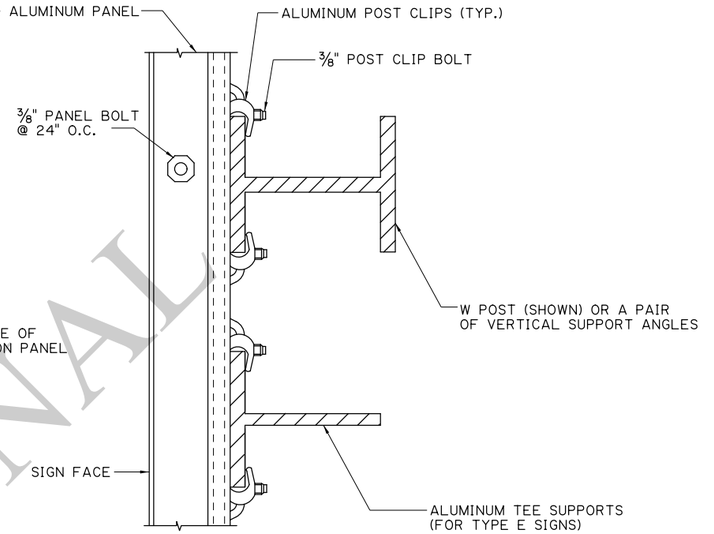

SECTION B-B

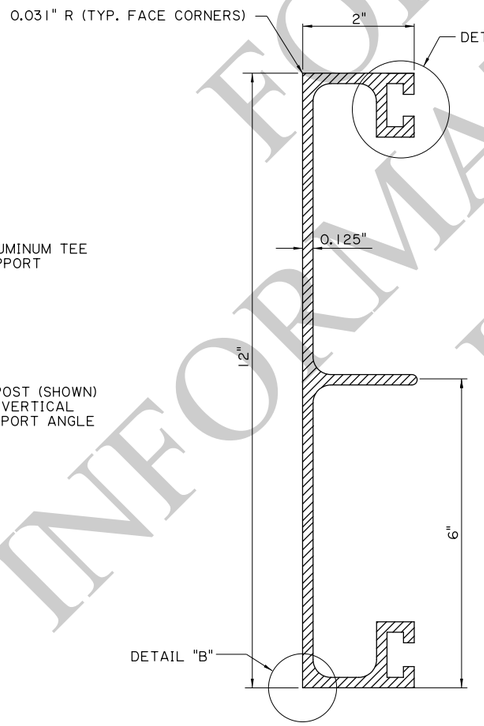

12" PANEL

MINIMUM WALL THICKNESS IS 0.080" UNLESS OTHERWISE SPECIFIED

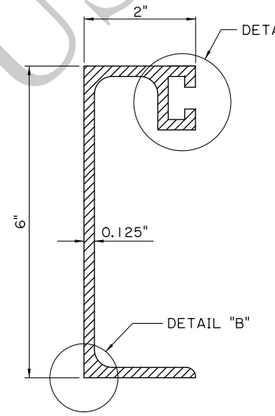

6" PANEL

MINIMUM WALL THICKNESS IS 0.080" UNLESS OTHERWISE SPECIFIED

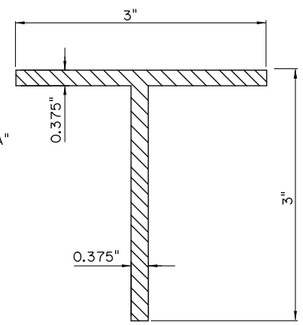

3"x3"x3/8"

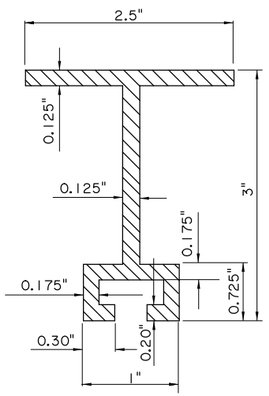

3"x2.5"

ALUMINUM TEE SUPPORTS

FOR TYPE E SIGNS

FOR INFORMATIONAL USE

SHEET NUMBER

PARISH	CONTROL SECTION	STATE PROJECT

DESIGN	K. BRAUNER
CHECK	C. GUIDRY
DETAIL	K. BRAUNER
CHECK	C. GUIDRY
REVIEW	C. BOURGEOIS
SERIES #	6 OF 17

APPROVED BY CHIEF ENGINEER: DATE: 10/14/2025

NO.	DATE	REVISION OR CHANGE ORDER DESCRIPTION	BY

STATE OF LOUISIANA

EXTRUDED ALUMINUM PANELS (TYPE D & E SIGNS)

ROADSIDE SIGNING STANDARDS

DOTD LOUISIANA DEPARTMENT OF TRANSPORTATION & DEVELOPMENT

STANDARD PLAN

9/10/2025

TYPE A SIGN

RECTANGULAR SHAPES:
4'-0" MAX. HORIZ. DIM.
DIAMOND SHAPES:
5'-0" MAX. EDGE DIM.
OTHER SHAPES:
5'-0" MAX. HORIZ. DIM.

TYPE B SIGN

CLUSTER ASSEMBLY
MAX. DIM. FOR DIFFERENT SIGN BLANK SHAPES ON SINGLE POST SIGNS.
DIAMOND: 5'-0"x5'-0"
TRIANGLE: 5'-0"x5'-0"x5'-0"
OTHERS: 5'-0" MAX. HORIZ. DIM.

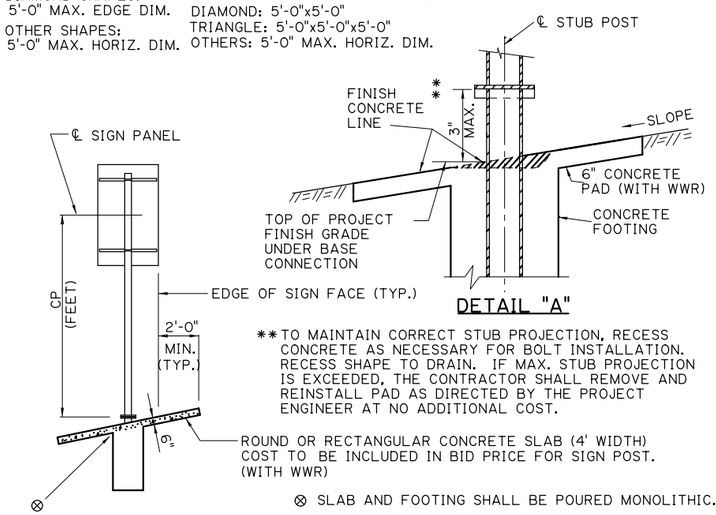

DETAIL "A"

** TO MAINTAIN CORRECT STUB PROJECTION, RECESS CONCRETE AS NECESSARY FOR BOLT INSTALLATION. RECESS SHAPE TO DRAIN. IF MAX. STUB PROJECTION IS EXCEEDED, THE CONTRACTOR SHALL REMOVE AND REINSTALL PAD AS DIRECTED BY THE PROJECT ENGINEER AT NO ADDITIONAL COST.

SINGLE POST MOUNTS															
CP	TOTAL SQ. FT. SIGN AREA														
	STEEL ALTERNATE														
	ZONE I							ZONE II							
	5	10	15	20	25	30	35	5	10	15	20	25	30	35
7	1	1	1	2	2	2	3	1	1	2	2	3	3	3
8			2			2			1					
9					3				2					
10				2						2				
11		1		3						3				
12	1	2							1					
13	2		2					2						3
14			3						2					4
15			3						3					4
16	2	2	2	3	3	3	3	2	2	3	3	3	3	4

SINGLE POST PIPE & TUBE SECTIONS	
NO.	STEEL
1	2½" ø SCH. 40
2	3½" ø SCH. 40
3	5" ø SCH. 40
4	6" ø SCH. 40

NOTES:

W POST SECTIONS AND TABLE:
COLUMNS HEADED BY THE NUMBERS 27 AND 20 REPRESENT THE DESIGN WIND PRESSURE IN POUNDS PER SQUARE FOOT.
SEE ACCOMPANYING LOUISIANA WIND MAP TO DETERMINE THE DESIGN WIND PRESURE.
L - LENGTH OF SIGN PANEL DESIGNED.
H - HEIGHT OF SIGN PANEL DESIGNED.
ALL DIMENSIONS ARE IN INCREMENTS OF EVEN FEET.

THIS SHEET TO BE USED WITH WIND LOAD MAP AND GENERAL NOTE SHEET.

CONCRETE SLAB TO BE REINFORCED WITH A.S.T.M. A1064 WWR 4x4-W4.0 x W4.0 AND FINISHED IN ACCORDANCE WITH LA. 805.3.060.E.

✡ 30' MAX. (15' MIN.) FOR FREEWAYS AND EXPRESSWAYS. 15' FOR FRONTAGE ROADS, "BRIDGE ICES BEFORE ROAD" SIGNS, AND TYPE D RAMP SIGNS. SEE SIGN SUMMARY SHEETS. PROJECT ENGINEER MAY ADJUST ON A CASE-BY-CASE BASIS.

⊠ 7' MINIMUM FOR ROUTE MARKERS, WARNING AND REGULATORY SIGNS. 8' MINIMUM FOR GUIDE SIGNS WHEN SECONDARY SIGN MOUNTED BELOW.

⊙ MOUNTING HEIGHT SHALL BE 7'-0" MIN. UNLESS OTHERWISE NOTED ON THE SIGN SUMMARY SHEET. CHEVRON SIGNS (W1-8) MAY BE INSTALLED AT 4'-0" OR HIGHER.

W POST SECTIONS FOR DOUBLE & TRIPLE POST MOUNTINGS																			
PL		STEEL		PL		STEEL		PL		STEEL		PL		STEEL					
L	H	27	20	L	H	27	20	L	H	27	20	L	H	27	20				
5	1	1	1	12	5	2	1	16	15	4	4	21	8	3	3				
5	2	1	1	12	6	2	2	16	16	4	4	21	9	4	3				
5	3	1	1	12	7	2	2	17	4	2	2	21	10	4	3				
5	4	1	1	12	8	2	2	17	5	2	2	21	11	4	4				
5	5	1	1	12	9	2	2	17	6	2	2	21	12	4	4				
5	6	1	1	12	10	2	2	17	7	3	2	21	13	4	3				
6	1	1	1	12	11	3	2	17	8	3	2	21	14	4	3				
6	2	1	1	12	12	3	2	17	9	3	3	21	15	4	4				
6	3	1	1	12	13	3	3	17	10	3	3	21	16	4	4				
6	4	1	1	13	3	1	1	17	11	4	3	22	4	2	2				
6	5	1	1	13	4	1	1	17	12	4	3	22	5	2	2				
6	6	1	1	13	5	2	1	17	13	3	3	22	6	3	2				
6	7	1	1	13	6	2	2	17	14	3	3	22	7	3	3				
7	2	1	1	13	7	2	2	17	15	4	3	22	8	3	3				
7	3	1	1	13	8	2	2	17	16	4	3	22	9	4	3				
7	4	1	1	13	9	2	2	18	3	2	1	22	10	4	3				
7	5	1	1	13	10	3	2	18	4	2	2	22	11	4	4				
7	6	1	1	13	11	3	2	18	5	2	2	22	12	4	4				
7	7	1	1	13	12	3	3	18	6	2	2	22	13	4	3				
7	8	1	1	13	13	3	3	18	7	3	2	22	14	4	4				
8	2	1	1	13	14	4	3	18	8	3	2	22	15	4	4				
8	3	1	1	14	3	1	1	18	9	3	3	22	16	4	4				
8	4	1	1	14	4	2	1	18	10	3	3	23	4	2	2				
8	5	1	1	14	5	2	2	18	11	4	3	23	5	3	2				
8	6	1	1	14	6	2	2	18	12	4	3	23	6	3	3				
8	7	1	1	14	7	2	2	18	13	3	3	23	7	3	3				
8	8	2	1	14	8	2	2	18	14	4	3	23	8	4	3				
8	9	2	1	14	9	3	2	18	15	4	3	23	9	4	3				
9	2	1	1	14	10	3	2	18	16	4	3	23	10	4	4				
9	3	1	1	14	11	3	3	19	3	2	1	23	11	4	4				
9	4	1	1	14	12	3	3	19	4	2	2	23	12	4	4				
9	5	1	1	14	13	4	3	19	5	2	2	23	13	4	4				
9	6	1	1	14	14	4	3	19	6	2	2	23	14	4	4				
9	7	2	1	14	15	4	3	19	7	3	2	23	15	4	4				
9	8	2	1	15	3	1	1	19	8	3	3	23	16	4	4				
9	9	2	2	15	4	2	1	19	9	3	3	24	4	2	2				
9	10	2	2	15	5	2	2	19	10	4	3	24	5	3	2				
10	2	1	1	15	6	2	2	19	11	4	3	24	6	3	3				
10	3	1	1	15	7	2	2	19	12	4	4	24	7	3	3				
10	4	1	1	15	8	3	2	19	13	4	3	24	8	4	3				
10	5	1	1	15	9	3	2	19	14	4	3	24	9	4	3				
10	6	2	1	15	10	3	3	19	15	4	3	24	10	4	4				
10	7	2	1	15	11	3	3	19	16	4	4	24	11	4	4				
10	8	2	2	15	12	3	3	20	4	2	2	24	12	4	4				
10	9	2	2	15	13	4	3	20	5	2	2	24	13	4	4				
10	10	2	2	15	14	4	3	20	6	3	2	24	14	4	4				
10	11	2	2	15	15	4	4	20	7	3	2	24	15	4	4				
11	2	1	1	15	16	4	4	20	8	3	3	24	16	5	4				
11	3	1	1	16	3	1	1	20	9	3	3	25	5	3	2				
11	4	1	1	16	4	2	1	20	10	4	3	25	6	3	3				
11	5	1	1	16	5	2	2	20	11	4	3	25	7	4	3				
11	6	2	1	16	6	2	2	20	12	4	4	25	8	4	3				
11	7	2	2	16	7	2	2	20	13	4	3	25	9	4	4				
11	8	2	2	16	8	3	2	20	14	4	3	25	10	4	4				
11	9	2	2	16	9	3	2	20	15	4	4	25	11	4	4				
11	10	2	2	16	10	3	3	20	16	4	4	25	12	5	4				
11	11	3	2	16	11	3	3	21	4	2	2	25	13	4	4				
11	12	3	2	16	12	4	3	21	5	2	2	25	14	4	4				
12	3	1	1	16	13	4	3	21	6	3	2	25	15	4	4				
12	4	1	1	16	14	4	3	21	7	3	3	25	16	5	4				

REAR ELEVATION OF SINGLE POST MOUNTING

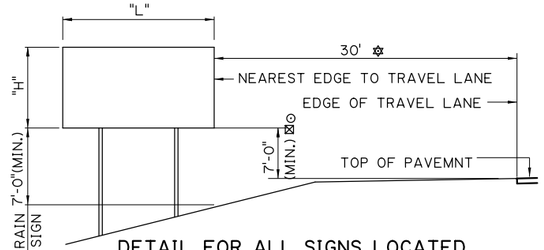

DETAIL FOR ALL SIGNS LOCATED ON FORE SLOPE (TWO SUPPORTS SHOWN)

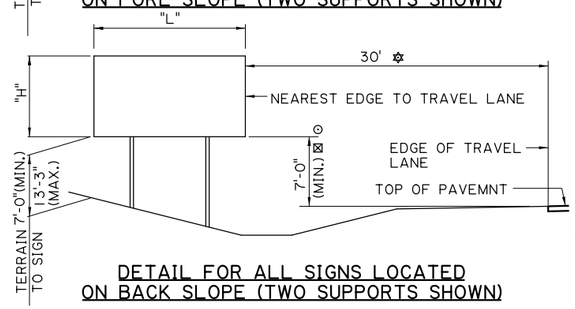

DETAIL FOR ALL SIGNS LOCATED ON BACK SLOPE (TWO SUPPORTS SHOWN)

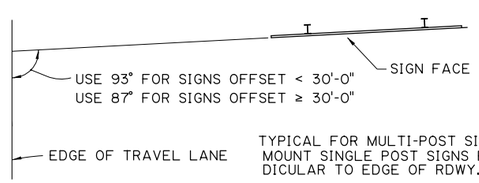

TYPICAL FOR MULTI-POST SIGNS. MOUNT SINGLE POST SIGNS PERPENDICULAR TO EDGE OF RDWY.

LOCATION OF ALL GROUND MOUNTED SIGN STRUCTURES (TWO SUPPORTS SHOWN)

△ FROM EDGE OF PAVED SHOULDER TO EDGE OF SIGN.

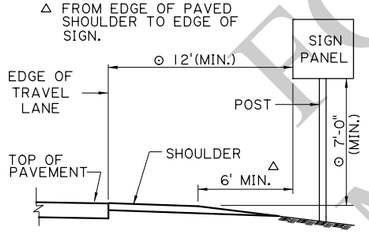

ROADSIDE SIGN
RURAL INTERSECTIONS

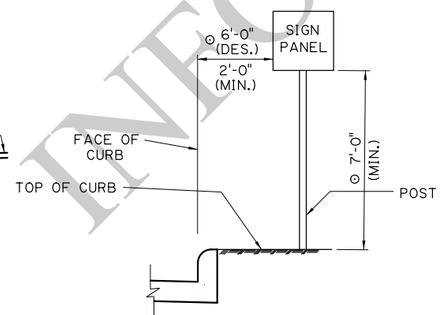

ROADSIDE SIGN
URBAN INTERSECTIONS

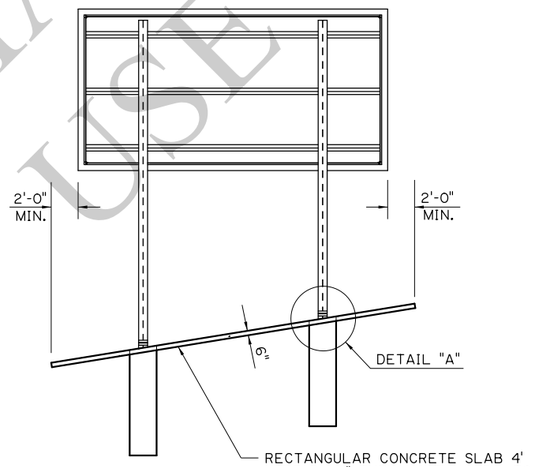

REAR ELEVATION OF MULTI - POST MOUNTING

W SECTIONS	
NO.	STEEL
1	W6x12
2	W8x18
3	W8x24
4	W10x33
5	W12x40
6	W12x45

FOR INFORMATIONAL USE

SHEET NUMBER

PARISH | CONTROL SECTION | STATE PROJECT

DESIGN K. BRAUNER | DETAIL K. BRAUNER | REVIEW C. BOURGEOIS
CHECK C. GUIDRY | CHECK C. GUIDRY | SERIES # 7 OF 17

APPROVED BY CHIEF ENGINEER:
DATE: 10/14/2025

NO.	DATE	REVISION OR CHANGE ORDER DESCRIPTION	BY

STATE OF LOUISIANA DEPARTMENT OF TRANSPORTATION AND DEVELOPMENT

ROADSIDE MOUNTED SIGNS (TYPE A, B, & D SIGNS)

ROADSIDE SIGNING STANDARDS

DOTD LOUISIANA DEPARTMENT OF TRANSPORTATION & DEVELOPMENT

STANDARD PLAN

9/10/2025

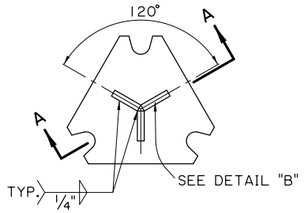

TOP VIEW STUB POST

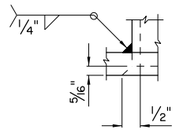

DETAIL "A"

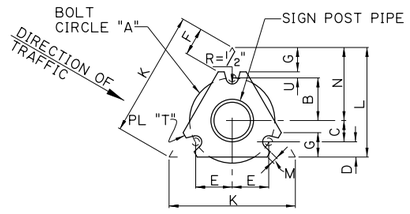

PLAN OF BASE

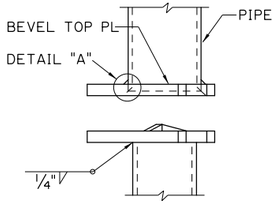

SECTION A-A

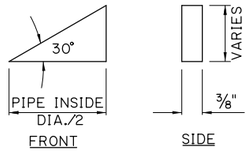

DETAIL "B"
3 REQ'D.

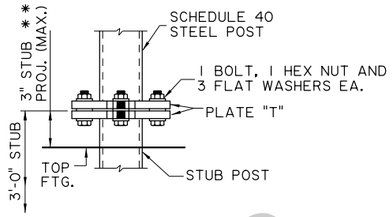

ELEVATION OF BASE CONNECTION
STEEL

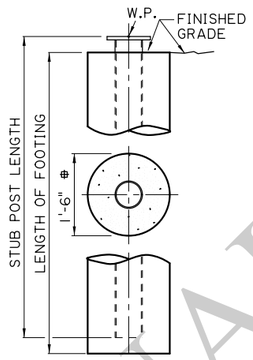

⌖ FOR 2½"ø (STEEL) POST SECTIONS,
FOOTING DIAMETER SHALL BE 1'-0"

FOOTING DETAIL
PIPE SECTIONS

PROCEDURE FOR ASSEMBLY OF BASE CONNECTION:

SPECIAL CARE SHALL BE TAKEN TO SET THE BASE PLUM TO AVOID EXCESSIVE SHIMMING AT THE BREAK-AWAY FEATURE AFTER FINAL INSTALLATION. EXCESSIVE SHIMMING COULD IMPAIR THE BREAK-AWAY FEATURE FOR WHICH THIS INSTALLATION WAS DESIGNED.

1. BASE SHALL BE ALIGNED AND SET PLUM BEFORE OR IMMEDIATELY AFTER POURING CONCRETE FOOTING.
2. H.S. BOLTS IN BASE PLATE SHALL BE TIGHTENED TO THE PRESCRIBED TORQUE. CARE SHALL BE TAKEN TO AVOID OVERTIGHTING.

FRICTION CAPS:

CAPS MAY BE MANUFACTURED FROM EITHER HOT ROLLED OR COLD ROLLED STEEL SHEETS. FOR PIPE SIZES 3½" AND SMALLER THE MINIMUM SHEET METAL THICKNESS SHALL BE 24 GAUGE. THE RIM EDGES SHALL BE REASONABLY STRAIGHT AND SMOOTH. CAPS SHALL BE SIZED AND FORMED IN SUCH A MANNER AS TO PRODUCE A DRIVE-ON FRICTION FIT AND HAVE NO TENDENCY TO ROCK WHEN SEATED ON THE PIPE. THE DEPTH SHALL BE SUFFICIENT TO GIVE POSITIVE PROTECTION AGAINST ENTRANCE OF RAINWATER. THEY SHALL BE FREE OF SHARP CREASES OR INDENTATIONS AND SHOW NO EVIDENCE OF METAL FRACTURE. CAPS SHALL HAVE A ELECTRODEPOSITED COATING OF ZINC IN ACCORDANCE WITH THE REQUIREMENTS OF A.S.T.M. SPECIFICATION B633 SC4, TYPE 1.

THIS SHEET TO BE USED WITH WIND LOAD MAP AND GENERAL NOTE SHEET.

MULTI-DIRECTIONAL BASE
SINGLE STEEL POST ONLY

** IF MAX. STUB PROJECTION IS EXCEEDED, CONTRACTOR SHALL REMOVE AND REINSTALL PAD AS DIRECTED BY THE PROJECT ENGINEER AT NO COST TO THE DEPARTMENT.

STEEL MULTI-DIRECTIONAL BASE CONNECTION DATA																	
NOMINAL PIPE SIZE	BOLT SIZE ⊙ & TORQUE	WELD SIZE	T	Y	A	B	C	D	E	F	G	K	L	M	N	U
2½" OR 3½" DIA.	⅝" T=226	⅜"	⅝"	7"	7"	3½"	1¾"	1¼"	3"	2 5/16"	2"	10⅜"	9"	½"	6"	½"

FOR STUB POST LENGTH & FOOTING DIMENSION SEE TABLE BELOW AND FOOTING DETAIL.
⊙ TORQUE IN INCH-LBS., BOLTS ARE HIGH STRENGTH

FOOTING DATA			
POST DIA.	STUB L	FOOTING L	CU.YD. CONC.
2½"	36"	36"	0.09
3½"	36"	36"	0.20
5"	48"	48"	0.26

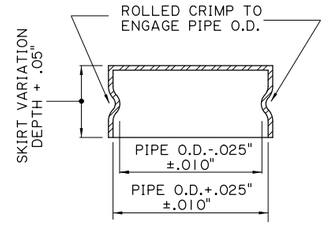

FRICTION CAP DETAIL
USED AT TOP OF ALL POSTS

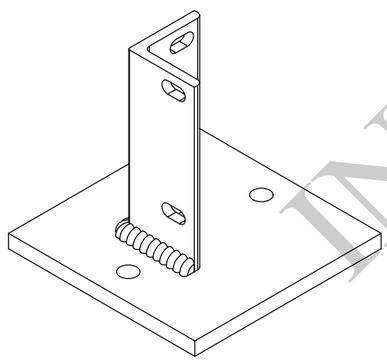

SURFACE MOUNT FOR MILE MARKERS
(SQUARE TUBE ONLY)

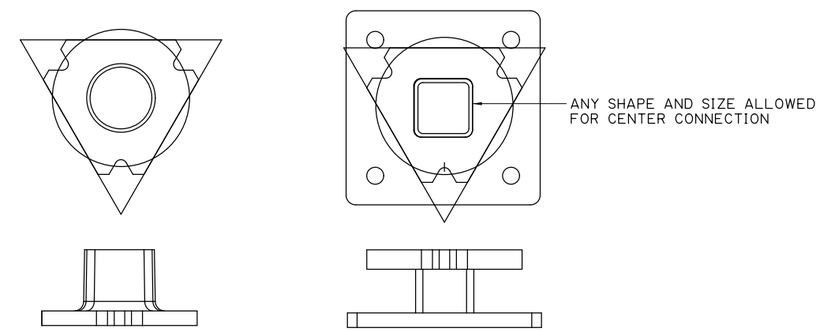

TYPICAL TOP ASSEMBLY

TYPICAL BOTTOM ASSEMBLY

CONCRETE SURFACE MOUNT

INFORMATIONAL USE

SHEET NUMBER

PARISH | CONTROL SECTION | STATE PROJECT

DESIGN K. BRAUNER | CHECK C. GUIDRY | DETAIL K. BRAUNER | CHECK C. GUIDRY | REVIEW C. BOURGEOIS | SERIES # 8 OF 17

APPROVED BY CHIEF ENGINEER: DATE: 10/14/2025

REVISION OR CHANGE ORDER DESCRIPTION | BY | DATE | NO.

STATE OF LOUISIANA

ROADSIDE MOUNTED SIGN DETAILS
(TYPE A & B SIGNS)

ROADSIDE SIGNING STANDARDS

DOTD LOUISIANA DEPARTMENT OF TRANSPORTATION & DEVELOPMENT

STANDARD PLAN

9/10/2025

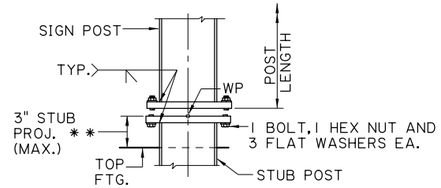

ELEVATION OF HORIZONTAL CONNECTION W SECTION

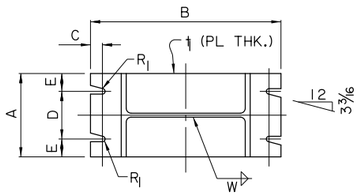

PLAN BASE PLATE AND POST

ADD ½" FOR BEVELED BASE PLATES

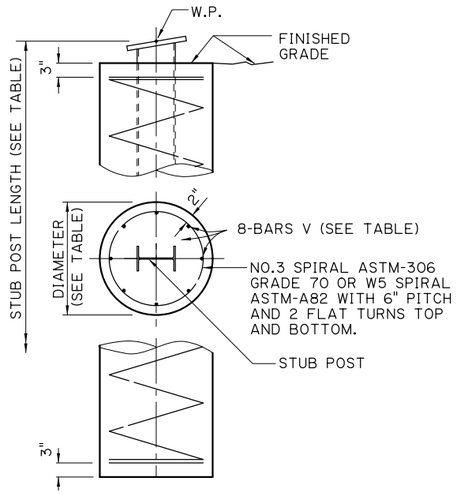

CONCRETE FOOTING DETAIL W SECTION

NOTE:
NO REINFORCING STEEL IS REQUIRED FOR 'S' SECTION.

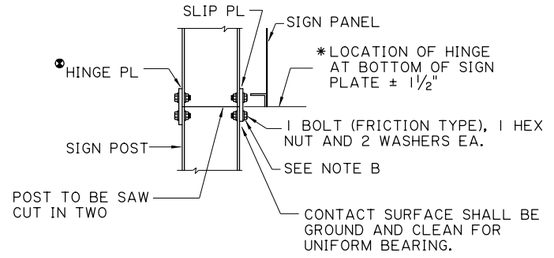

SLIP PLATE CONNECTION DETAIL

● WHEN SIGN IS LOCATED ON SIDE OF ROADWAY WITH TWO WAY TRAFFIC, A SLIP PLATE WILL BE USED ON BOTH SIDES OF THE POST IN LIEU OF THE HINGE PLATE SHOWN

* FOR EXTRUSION SIGN PANEL ALTERNATE, LOCATION OF ℄ HINGE SHALL BE 3½" FROM BOTTOM OF SIGN PANEL.

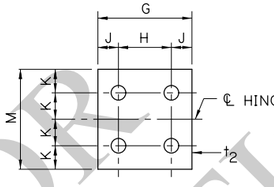

HINGE PLATE DETAIL

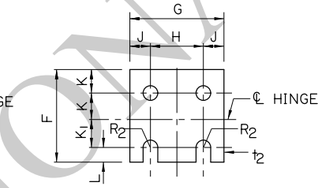

SLIP PLATE DETAIL

BOLT HOLE DIAMETERS TO BE EQUAL TO BOLT DIA. + 1/16" IN POST FLANGE AND SLIP PLATE.

SLIP PLATE CONNECTION NOTES:

1. POST SHALL BE SAW CUT OR TORCH CUT PRIOR TO GALVANIZING.
2. SLIP PLATE SHALL BE INSTALLED WITH H.S. BOLTS AT MINIMUM BOLT TENSION.
3. TIGHTING SHALL BE OBTAINED BY
   (a) TURN OF NUT METHOD; OR
   (b) DIRECT TENSION INDICATOR METHOD USING LOAD INDICATOR WASHER. SEE NOTE A.
4. TIGHTING SHALL BE TO SUCH A DEGREE AS TO OBTAIN MINIMUM BOLT TENSION AS SPECIFIED IN STANDARD SPECIFICATIONS 807.3.030, CURRENT AT TIME OF FABRICATION.
5. TIGHTEN BOLTS IN A SYSTEMATIC ORDER TO THE PRESCRIBED MINIMUM BOLT TENSION.

NOTE A:

WHEN HIGH STRENGTH BOLT IS TIGHTENED BY USE OF A DIRECT TENSION INDICATOR,THE INSTALLATION AND INSPECTION SHALL BE IN ACCORDANCE WITH SPECIFICATION FOR STRUCTURAL JOINTS, SECTION 5 AND 6 FOR ASTM A-325 BOLTS APPROVED BY THE RESEARCH COUNCIL ON RIVETED AND BOLTED STRUCTURAL JOINTS. FOR DETAILED INSTALLATION AND INSPECTION PROCEDURES FOLLOWED MANUFACTURER'S RECOMMENDATIONS. CONTRACTOR SHALL BE REQUIRED TO SUBMIT BROCHURES TO THE BRIDGE DESIGN ENGINEER FOR APPROVAL.

NOTE B:

WHEN HIGH STRENGTH BOLT IS TIGHTENED BY USE OF A DIRECT TENSION INDICATOR METHOD, THE WASHER UNDER THE BOLT HEAD SHALL BE A LOAD INDICATOR WASHER.

PROCEDURE FOR ASSEMBLY OF BASE CONNECTION:

SPECIAL CARE SHALL BE TAKEN TO SET THE BASE PLUMB TO AVOID EXCESSIVE SHIMMING AT THE BREAK-AWAY FEATURE AFTER FINAL INSTALLATION. EXCESSIVE SHIMMING COULD IMPAIR THE BREAK-AWAY FEATURE FOR WHICH THIS INSTALLATION WAS DESIGNED. SHIM PACKS SHOWN ON THIS DRAWING SHOULD BE SUFFICIENT TO ALLOW FOR NORMAL MISALIGNMENT.

1. BASE SHALL BE ALIGNED AND SET PLUMB BEFORE OR IMMEDIATELY AFTER POURING CONCRETE FOOTING.
2. H.S. BOLTS IN BASE PLATE SHALL BE TIGHTENED TO THE PRESCRIBED TORQUE. CARE SHALL BE TAKEN TO AVOID OVERTIGHTING.

DIRECTION OF HIGHEST SPEED TRAFFIC

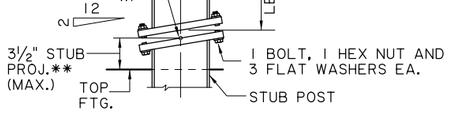

ELEVATION OF BEVELED CONNECTION W SECTION

TO BE USED ON ALL MULTI-POST SIGNS WITH DISTANCE BETWEEN POSTS 7'-0" ℄ TO ℄ OR LESS.

** IF MAX. STUB PROJECTION IS EXCEEDED, CONTRACTOR SHALL REMOVE AND REINSTALL PAD AS DIRECTED BY THE PROJECT ENGINEER AT NO COST TO THE DEPARTMENT.

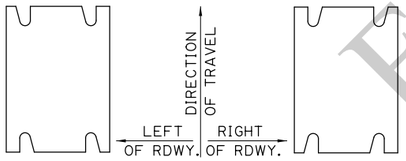

LEFT HAND SLOTS — RIGHT HAND SLOTS

FOR ONE-WAY TRAFFIC LANES. FOR TWO-WAY TRAFFIC LANES, USE RIGHT HAND SLOTS ONLY.

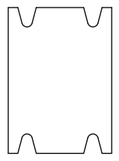

TWO-WAY SLOTS

FOR GORE INSTALLATIONS

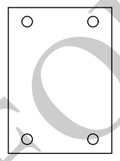

HOLES

FOR BRIDGE MOUNTED SIGNS & SIGNS BEHIND GUARDRAIL

ORIENTATION AND USE OF SLOTS AND HOLES

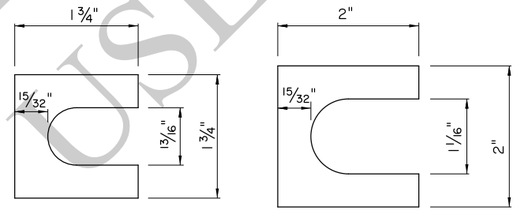

* SHIM DETAIL

BOLTS UP TO ¾" ø BOLTS

* SHIM DETAIL

BOLTS UP TO 1" ø BOLTS

* FURNISH 2 SHIMS 0.012"± THICK AND 2 SHIMS 0.032"± THICK PER POST. SHIMS SHALL BE BRASS CONFORMING TO A.S.T.M. SPEC. B-36 AND BE USED AS DIRECTED BY THE PROJECT ENGINEER.

SECTION \ DIMENSION (INCH)	BASE CONNECTION DATA										SLIP PLATE & HINGE PLATE DATA										FOOTING DATA				
	BOLT SIZE & * TORQUE LIMITS	A	B	C	D	E	t_1	R_1	W	W (ALT.) SEE NOTE	F	G	H	J	K	K_1	L	M	t_2	R_2	H.S. BOLT DIA.	STUB LTH.	FTG. DIA.	LTH. OF FTG.	BARS V SIZE	CU. YD. CONC.
W6x12	⅝"ø T= 226-345	4	10	¾	2	1	1½	11/32	5/16	5/16	3⅝	4	2¼	⅞	1	1¼	⅝	4¼	⅜	9/32	½	24	24	48	#5	0.46
W8x18		5¼	12	¾	3	1⅛	1½	11/32	5/16	5/16	4⅛	5¼	2¾	1¼	1⅛	1⅜	¾	4¾	½	11/32	⅝	24	24	60	#6	0.58
W8x24	¾"ø T= 369-554	6½	12½	⅞	3¼	1⅝	1¾	13/32	⅜	7/16	4⅛	6½	3½	1½	1⅛	1⅜	¾	4¾	½	11/32	⅝	30	24	72	#7	0.70
W10x33	1"ø T= 460-735	8	15½	1¼	4½	1¾	2	17/32	⅜	7/16	4⅝	8	5½	1¼	1¼	1½	⅞	5¼	⅝	13/32	¾	30	24	96	#9	0.93
W12x40		8	17½	1¼	4½	1¾	2	17/32	⅜	7/16	4⅝	8	5½	1¼	1¼	1½	⅞	5¼	⅝	13/32	¾	36	24	120	#10	1.16
W12x45		10	17½	1¼	6	2	2	17/32	⅜	7/16	5½	10	5½	2¼	1½	1¾	1	6¼	¾	15/32	⅞	36	36	96	#9	2.09

* BASE PLATE TO POST WELD ALTERNATE (AS AN ALTERNATE TO WELDS SHOWN IN DETAILS, THE POST MEMBERS TABULATED MAY BE WELDED ALL AROUND WITH A FILLET WELD W(ALT.).) ALL BOLTS SHALL HAVE A MINIMUM OF 3 THREADS BEYOND THE NUT. BOLT TORQUE LIMITS ARE IN INCH POUNDS. (THE HIGH STRENGTH BOLTS AT THE BASE CONNECTION SHOULD BE TORQUED WITHIN THE LIMITS SPECIFIED, HOWEVER, THE LOWER LIMIT IS DESIRABLE). FOR NON-BREAKAWAY USE TORQUE LIMITS GIVEN IN THE STANDARD SPECIFICATIONS

FOR INFORMATIONAL USE

SHEET NUMBER

PARISH | CONTROL SECTION | STATE PROJECT

DESIGN K. BRAUNER | DETAIL K. BRAUNER | REVIEW C. BOURGEOIS
CHECK C. GUIDRY | CHECK C. GUIDRY | SERIES # 9 OF 17

APPROVED BY CHIEF ENGINEER: DATE: 10/14/2025

REVISION OR CHANGE ORDER DESCRIPTION | NO. | DATE | BY

ROADSIDE MOUNTED SIGN DETAILS
(TYPE D SIGNS)

ROADSIDE SIGNING STANDARDS

DOTD LOUISIANA DEPARTMENT OF TRANSPORTATION & DEVELOPMENT

STANDARD PLAN

9/10/2025

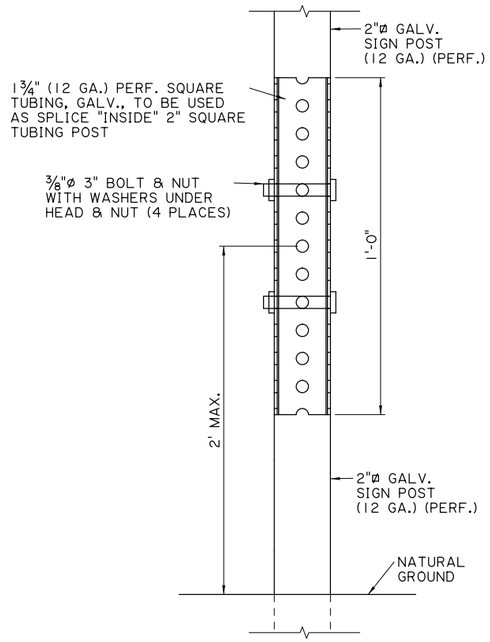

SPLICE JOINT
FOR SIGN 2" POST

SIGN CENTROID (CP)	ALLOWABLE SIGN AREA (FT^2)			
	70 MPH + 30% GUST		80 MPH + 30% GUST	
	SINGLE POST (2" x 12GA PERF.)	DOUBLE POST (2" x 12GA PERF.)	SINGLE POST (2" x 12GA PERF.)	DOUBLE POST (2" x 12GA PERF.)
14'	3.99	7.98	2.99	5.97
13.5'	4.14	8.28	3.10	6.19
13'	4.30	8.59	3.21	6.43
12.5'	4.47	8.93	3.34	6.68
12'	4.65	9.30	3.48	6.96
11.5'	4.85	9.70	3.63	7.26
11'	5.07	10.14	3.79	7.59
10.5'	5.31	10.62	3.97	7.95
10'	5.57	11.15	4.17	8.34
9.5'	5.86	11.73	4.39	8.77
9'	6.19	12.37	4.63	9.26
8.5'	6.55	13.09	4.90	9.79
8'	6.95	13.90	5.20	10.40
7.5'	7.41	14.81	5.54	11.08
7'	7.93	15.86	5.93	11.86

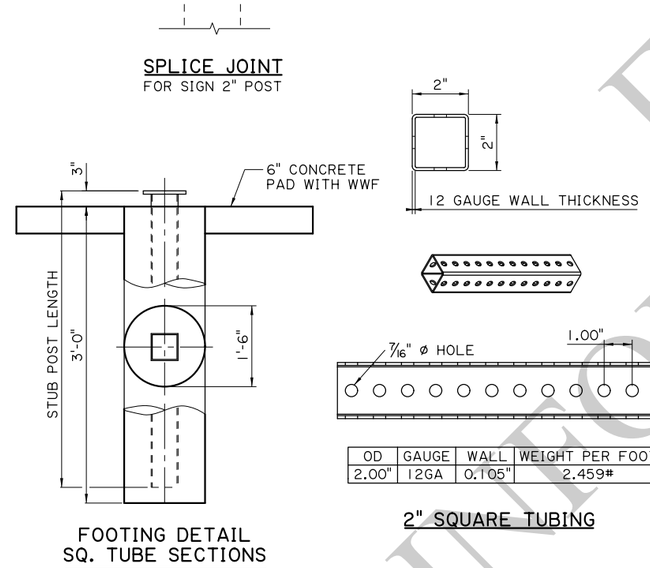

FOOTING DETAIL
SQ. TUBE SECTIONS

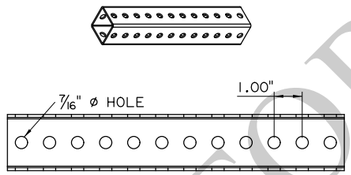

OD	GAUGE	WALL	WEIGHT PER FOOT
2.00"	12GA	0.105"	2.459#

2" SQUARE TUBING

SIGN CLAMP FOR SQUARE POSTS

⅞" WIDE X 11GA. TYPE 304, #2B FINISHED STAINLESS STEEL INCLUDES ⅜" - 16 X 2" CARRIAGE BOLT AND CASE HARDENED FLANGE NUT.

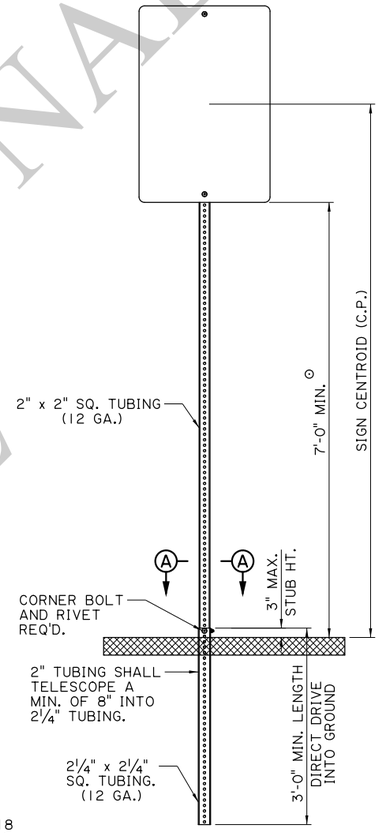

HARD SOIL LOCATIONS

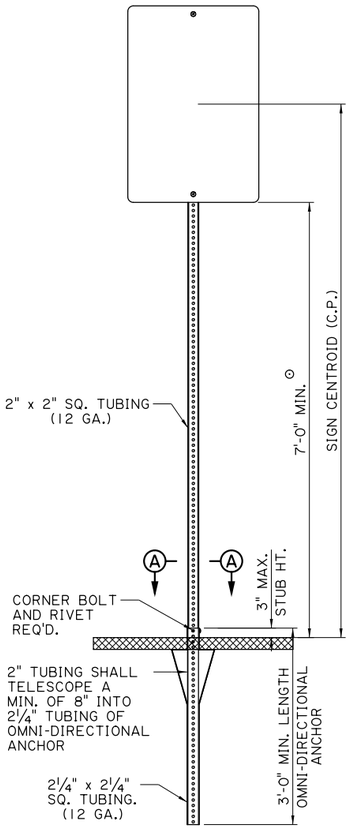

SOFT SOIL LOCATIONS

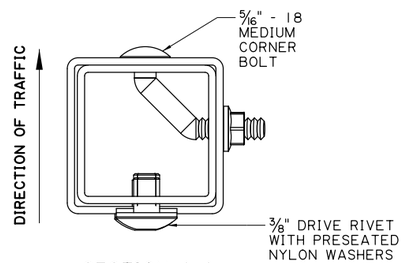

SECTION A-A

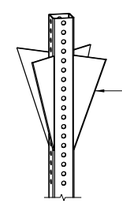

OMNI-DIRECTIONAL ANCHOR

NOTES:

SEE 1015.2 IN THE STANDARD SPECIFICATIONS FOR INFORMATION RELATED TO THE ALLOWABLE MATERIALS.

SIGNS MOUNTED TO SINGLE SQUARE TUBE POSTS DO NOT REQUIRE STIFFENERS UNLESS THE SIGN HAS AT LEAST ONE SIDE GREATER THAN 36" LONG.

FOR DUAL POSTS, LOCATE POSTS AT 58% SPACING FROM CENTER OF SIGN, OR 21% FROM EACH EDGE OF SIGN. USE STIFFENERS ON BACK OF SIGNS MOUNTED ON DUAL POSTS.

SIGNS MAY BE MOUNTED BACK TO BACK ON THE POST.

⊙ MOUNTING HEIGHT SHALL BE 7'-0" MIN. UNLESS OTHERWISE NOTED ON THE SIGN SUMMARY SHEET. CHEVRON SIGNS (W1-8) MAY BE INSTALLED AT 4'-0" OR HIGHER.

FOR INFORMATIONAL USE

SHEET NUMBER

PARISH	CONTROL SECTION	STATE PROJECT

DESIGN	K. BRAUNER
CHECK	C. GUIDRY
DETAIL	K. BRAUNER
CHECK	C. GUIDRY
REVIEW	C. BOURGEOIS
SERIES #	10 OF 17

APPROVED BY CHIEF ENGINEER: DATE: 10/14/2025

NO.	DATE	REVISION OR CHANGE ORDER DESCRIPTION	BY

STATE OF LOUISIANA
DEPARTMENT OF TRANSPORTATION AND DEVELOPMENT

SQUARE TUBE SIGN DETAILS

ROADSIDE SIGNING STANDARDS

DOTD
LOUISIANA DEPARTMENT OF TRANSPORTATION & DEVELOPMENT

STANDARD PLAN

9/10/2025

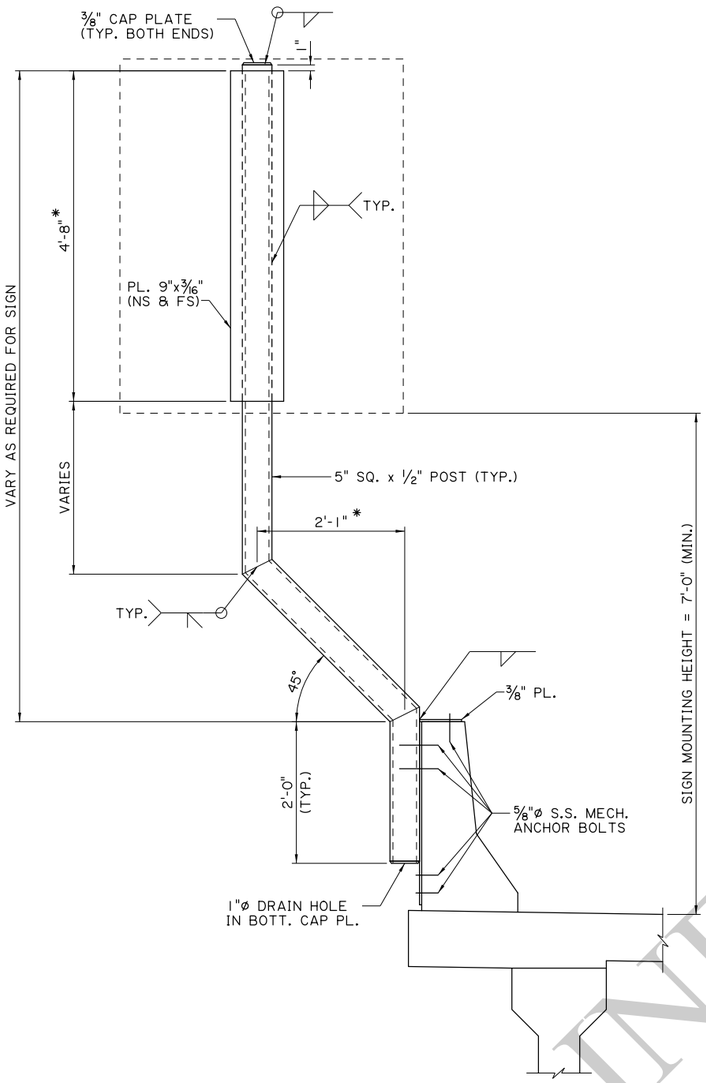

OFFSET SIGN SUPPORT

* DIMENSIONS ARE BASED ON A 5 FT. x 4 FT. SIGN. ADJUST AS NEEDED FOR DIFFERENT SIGN SIZES.

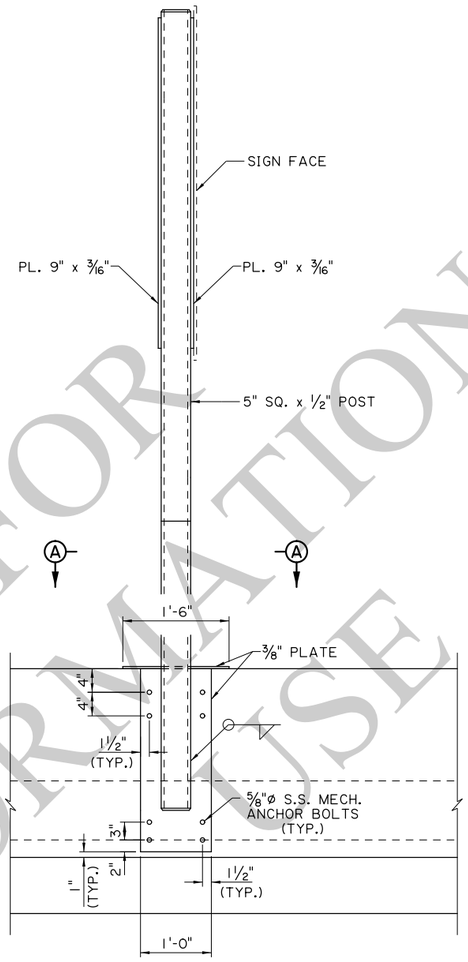

OUTSIDE ELEVATION SHOWING BARRIER

(TYPICAL INSTALLATION)

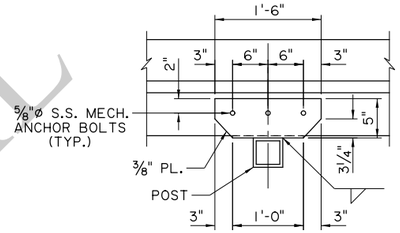

SECTION A-A

NOTES:

STRUCTURAL MEMBERS SHALL BE AASHTO M270 GRADE 50 STEEL AND SHALL BE HOT DIPPED GALVANIZED PER ASTM A-123.

MECHANICAL ANCHOR BOLTS SHALL BE 5/8"ø STAINLESS STEEL (MIN. FY = 55 ksi) AND SHALL BE SELECTED FROM THE A.M.L. AND INSTALLED AS PER THE MANUFACTURER'S RECOMMENDATIONS. EACH ANCHOR SHALL HAVE AN ALLOWABLE CAPACITY OF 3 KIPS PULLOUT AND 3 KIPS SHEAR AFTER APPLICATION OF ANY REDUCTION FACTORS FOR ANCHOR SPACING AND EDGE DISTANCE.

WELDING SHALL BE IN ACCORDANCE WITH THE BRIDGE WELDING CODE OF THE AMERICAN WELDING SOCIETY (AWS D1.5-10), AND SECTION 809 OF THE LOUISIANA STANDARD SPECIFICATIONS FOR ROADS AND BRIDGES, 2016 EDITION.

NO PART OF ANY SIGN SHALL PROTRUDE INTO THE SHOULDER AREA. DIMENSIONS OF SUPPORT POST AND BRACKET SHALL BE ADJUSTED AS NEEDED PRIOR TO FABRICATION.

ANY PORTIONS OF THE EXISTING BARRIER THAT ARE DAMAGED SHALL BE REPAIRED TO THE SATISFACTION OF THE PROJECT ENGINEER.

DIMENSIONS RELATED TO THE BARRIER CONNECTION ARE BASED ON AS-BUILT DRAWINGS AND PREVIOUS STANDARDS. DIMENSIONS SHALL BE ADJUSTED AS NEEDED BASED ON FIELD MEASUREMENTS.

A 1/8" NEOPRENE PAD SHALL BE USED BETWEEN ALL STEEL AND CONCRETE CONTACT SURFACES.

MAX SIGN AREA = 20 SQFT.

FOR INFORMATIONAL USE

SHEET NUMBER

PARISH | CONTROL SECTION | STATE PROJECT

DESIGN K. BRAUNER | DETAIL K. BRAUNER | REVIEW C. BOURGEOIS
CHECK C. GUIDRY | CHECK C. GUIDRY | SERIES # 11 OF 17

APPROVED BY CHIEF ENGINEER:

DATE: 10/14/2025

NO.	DATE	REVISION OR CHANGE ORDER DESCRIPTION	BY

STATE OF LOUISIANA
DEPARTMENT OF TRANSPORTATION AND DEVELOPMENT

Z - BRACKET SIGN SUPPORT
(F - SHAPE BARRIER)

ROADSIDE SIGNING STANDARDS

DOTD
LOUISIANA DEPARTMENT OF TRANSPORTATION & DEVELOPMENT

STANDARD PLAN

9/10/2025

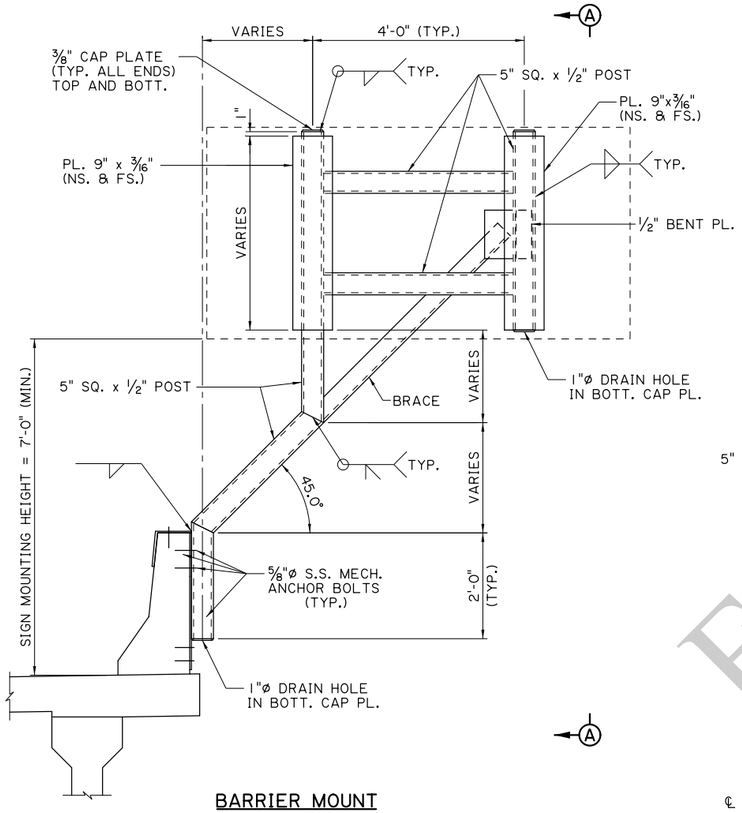

BARRIER MOUNT

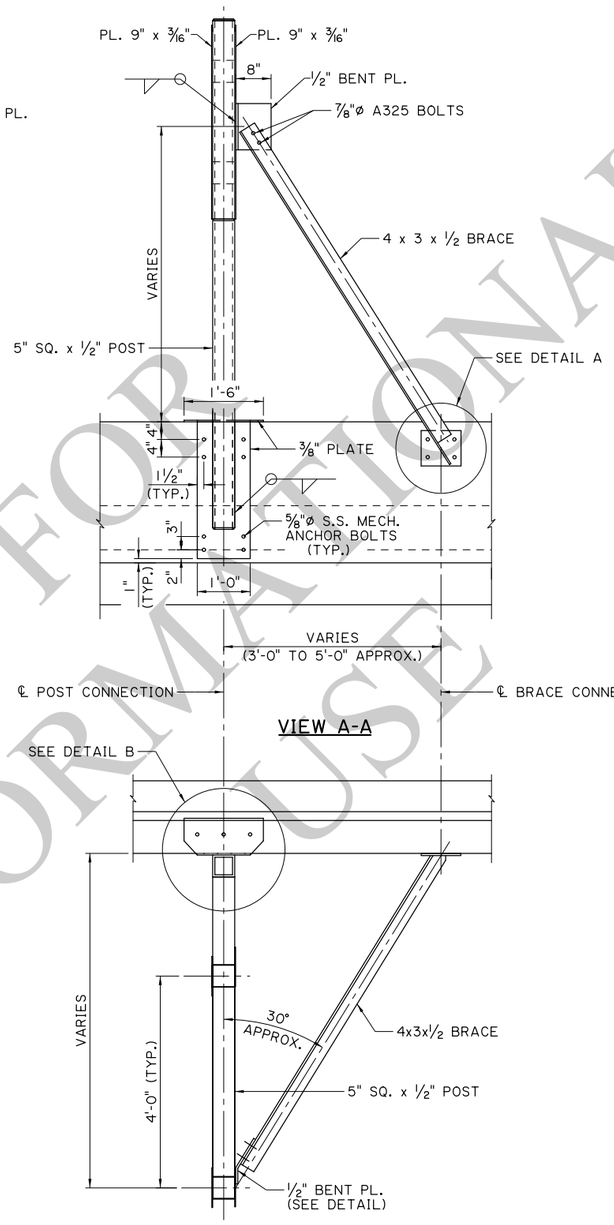

VIEW A-A

TOP VIEW

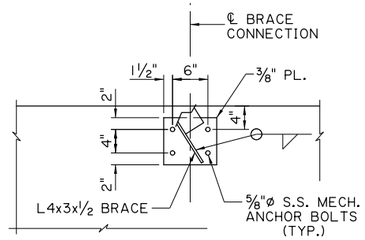

DETAIL A

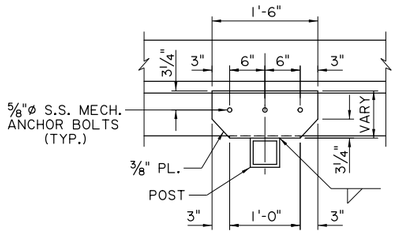

DETAIL B

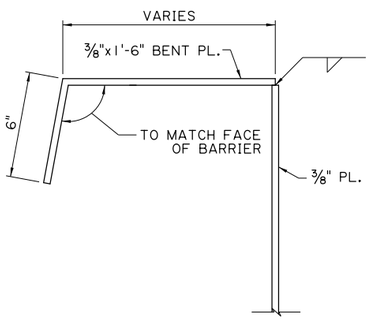

BARRIER CONNECTION DETAIL

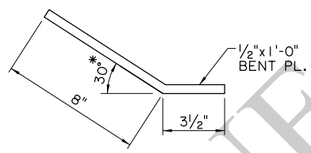

1/2" BENT PLATE DETAIL

* ANGLE IS APPROXIMATE. VARY AS NEEDED.

NOTES:

STRUCTURAL MEMBERS SHALL BE AASHTO M270 GRADE 50 STEEL AND SHALL BE HOT DIPPED GALVANIZED PER ASTM A-123. A325 BOLTS TO BE GALVANIZED PER ASTM A-153.

MECHANICAL ANCHOR BOLTS SHALL BE 5/8"ø STAINLESS STEEL (MIN. FY = 55 ksi) AND SHALL BE SELECTED FROM THE A.M.L. AND INSTALLED AS PER THE MANUFACTURER'S RECOMMENDATIONS. EACH ANCHOR SHALL HAVE AN ALLOWABLE CAPACITY OF 3 KIPS PULLOUT AND 3 KIPS SHEAR AFTER APPLICATION OF ANY REDUCTION FACTORS FOR ANCHOR SPACING AND EDGE DISTANCE.

WELDING SHALL BE IN ACCORDANCE WITH THE BRIDGE WELDING CODE OF THE AMERICAN WELDING SOCIETY (AWS D1.5-10), AND SECTION 809 OF THE LOUISIANA STANDARD SPECIFICATIONS FOR ROADS AND BRIDGES, 2016 EDITION.

NO PART OF ANY SIGN SHALL PROTRUDE INTO THE SHOULDER AREA. DIMENSIONS OF SUPPORT POST AND BRACKET SHALL BE ADJUSTED AS NEEDED PRIOR TO FABRICATION.

ANY PORTIONS OF THE EXISTING BARRIER THAT ARE DAMAGED SHALL BE REPAIRED TO THE SATISFACTION OF THE PROJECT ENGINEER.

DIMENSIONS RELATED TO THE BARRIER CONNECTION ARE BASED ON AS-BUILT DRAWINGS AND PREVIOUS STANDARDS. DIMENSIONS SHALL BE ADJUSTED AS NEEDED BASED ON FIELD MEASUREMENTS.

A 1/8" NEOPRENE PAD SHALL BE USED BETWEEN ALL STEEL AND CONCRETE CONTACT SURFACES.

MAX SIGN AREA = 40 SQFT.

FOR INFORMATIONAL PURPOSES ONLY

SHEET NUMBER

PARISH	CONTROL SECTION	STATE PROJECT

DESIGN	K. BRAUNER
CHECK	C. GUIDRY
DETAIL	K. BRAUNER
CHECK	C. GUIDRY
REVIEW	C. BOURGEOIS
SERIES #	12 OF 17

APPROVED BY CHIEF ENGINEER:

DATE: 10/14/2025

NO.	DATE	REVISION OR CHANGE ORDER DESCRIPTION	BY

STATE OF LOUISIANA DEPARTMENT OF TRANSPORTATION AND DEVELOPMENT

Z - BRACKET SIGN SUPPORTS (F - SHAPE BARRIER)

ROADSIDE SIGNING STANDARDS

DOTD LOUISIANA DEPARTMENT OF TRANSPORTATION & DEVELOPMENT

STANDARD PLAN

9/10/2025

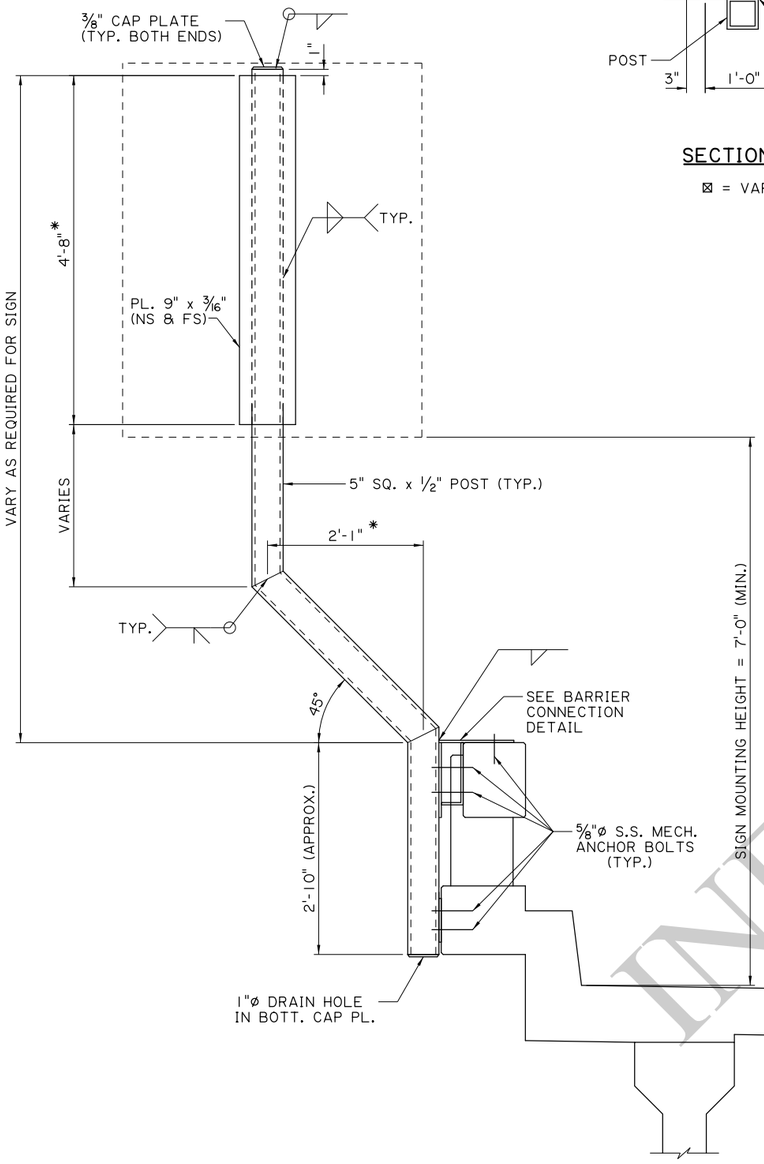

OFFSET SIGN SUPPORT

* DIMENSIONS ARE BASED ON A 5 FT. x 4 FT. SIGN. ADJUST AS NEEDED FOR DIFFERENT SIGN SIZES.

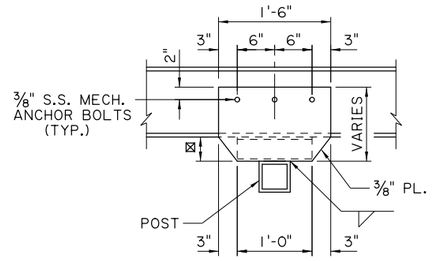

SECTION A-A

⊠ = VARIES

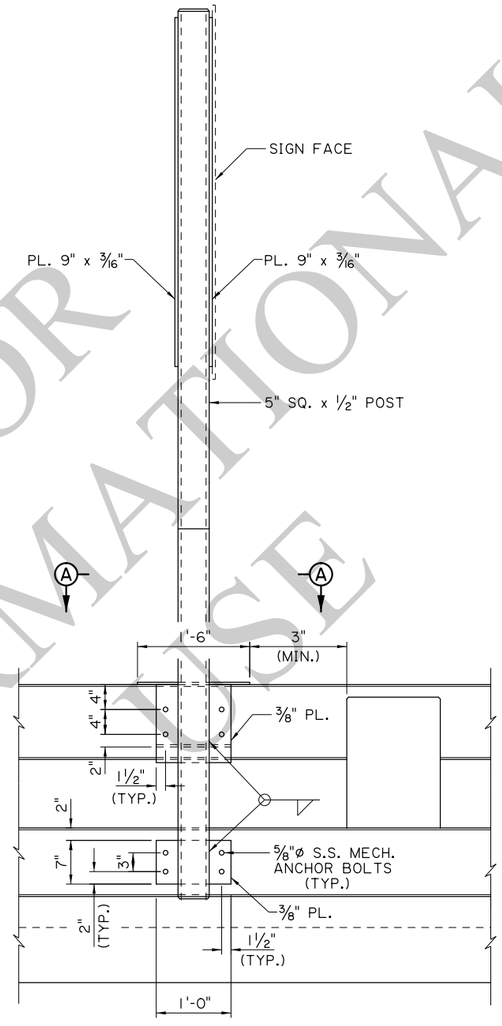

OUTSIDE ELEVATION SHOWING BARRIER

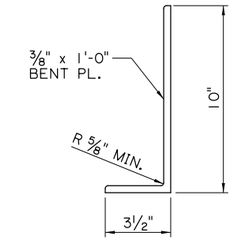

3/8" BENT PL. DETAIL

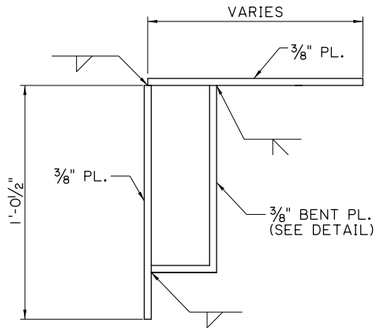

BARRIER CONNECTION DETAIL

NOTES:

STRUCTURAL MEMBERS SHALL BE AASHTO M270 GRADE 50 STEEL AND SHALL BE HOT DIPPED GALVANIZED PER ASTM A-123.

MECHANICAL ANCHOR BOLTS SHALL BE 5/8"ø STAINLESS STEEL (MIN. FY = 55 ksi) AND SHALL BE SELECTED FROM THE A.M.L. AND INSTALLED AS PER THE MANUFACTURER'S RECOMMENDATIONS. EACH ANCHOR SHALL HAVE AN ALLOWABLE CAPACITY OF 3 KIPS PULLOUT AND 3 KIPS SHEAR AFTER APPLICATION OF ANY REDUCTION FACTORS FOR ANCHOR SPACING AND EDGE DISTANCE.

WELDING SHALL BE IN ACCORDANCE WITH THE BRIDGE WELDING CODE OF THE AMERICAN WELDING SOCIETY (AWS D1.5-10), AND SECTION 809 OF THE LOUISIANA STANDARD SPECIFICATIONS FOR ROADS AND BRIDGES, 2016 EDITION.

NO PART OF ANY SIGN SHALL PROTRUDE INTO THE SHOULDER AREA. DIMENSIONS OF SUPPORT POST AND BRACKET SHALL BE ADJUSTED AS NEEDED PRIOR TO FABRICATION.

ANY PORTIONS OF THE EXISTING BARRIER THAT ARE DAMAGED SHALL BE REPAIRED TO THE SATISFACTION OF THE PROJECT ENGINEER.

DIMENSIONS RELATED TO THE BARRIER CONNECTION ARE BASED ON AS-BUILT DRAWINGS AND PREVIOUS STANDARDS. DIMENSIONS SHALL BE ADJUSTED AS NEEDED BASED ON FIELD MEASUREMENTS.

A 1/8" NEOPRENE PAD SHALL BE USED BETWEEN ALL STEEL AND CONCRETE CONTACT SURFACES.

MAX SIGN AREA = 20 SQFT.

FOR INFORMATIONAL USE

SHEET NUMBER

PARISH | CONTROL SECTION | STATE PROJECT

DESIGN K. BRAUNER | DETAIL K. BRAUNER | REVIEW C. BOURGEOIS
CHECK C. GUIDRY | CHECK C. GUIDRY | SERIES # 13 OF 17

APPROVED BY CHIEF ENGINEER: DATE: 10/14/2025

NO. | DATE | REVISION OR CHANGE ORDER DESCRIPTION | BY

STATE OF LOUISIANA DEPARTMENT OF TRANSPORTATION AND DEVELOPMENT

Z - BRACKET SIGN SUPPORT (POST AND RAIL BARRIER)

ROADSIDE SIGNING STANDARDS

DOTD LOUISIANA DEPARTMENT OF TRANSPORTATION & DEVELOPMENT

STANDARD PLAN

9/10/2025

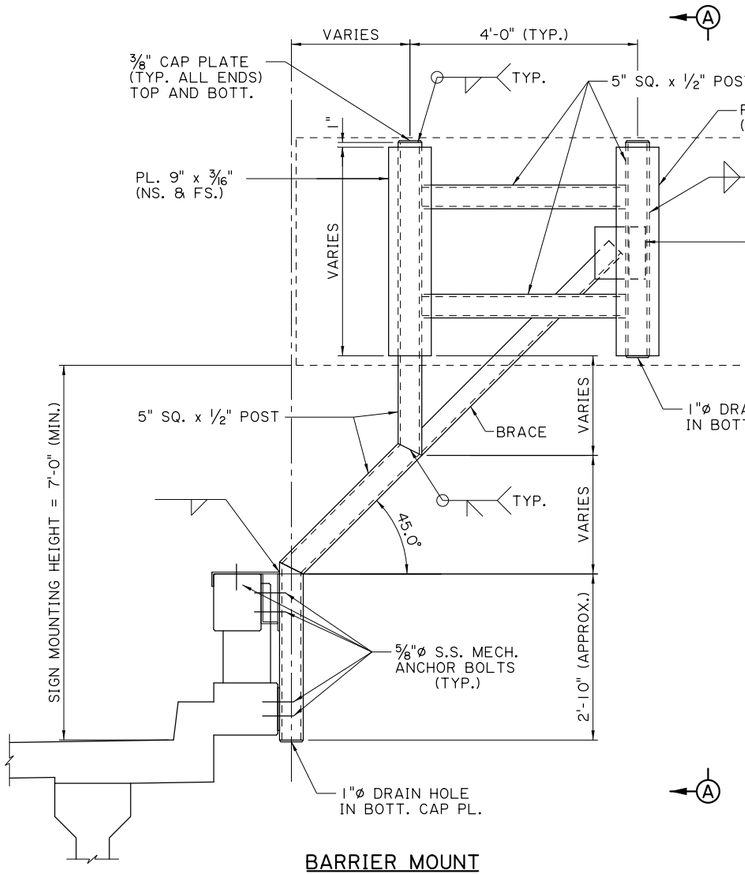

BARRIER MOUNT

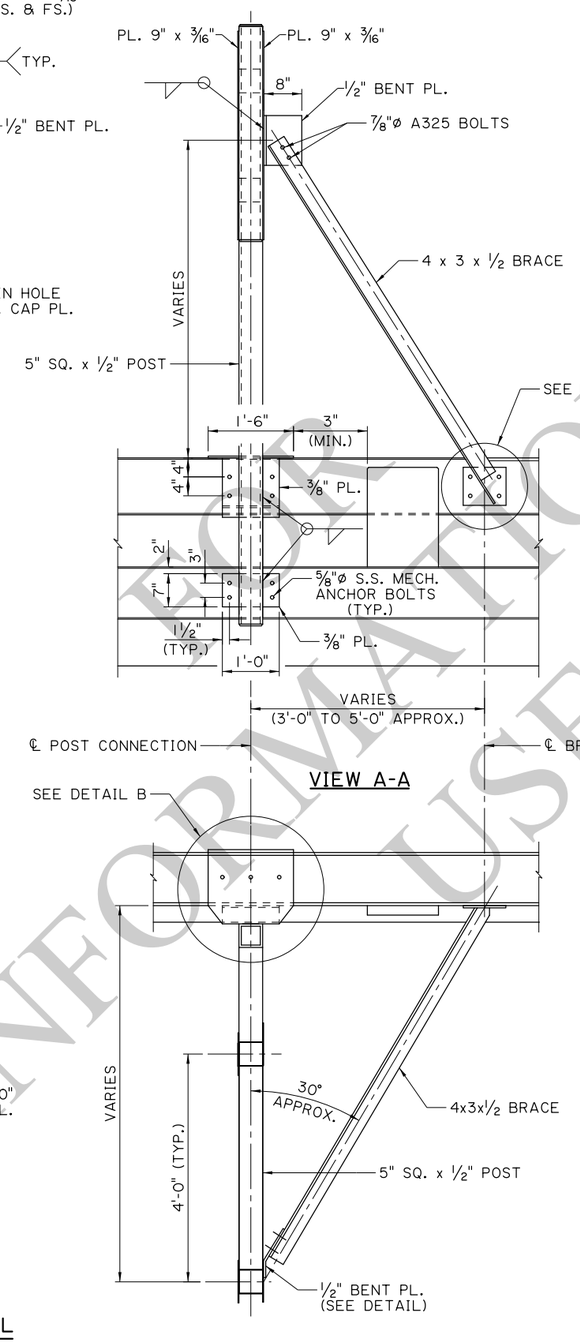

VIEW A-A

TOP VIEW

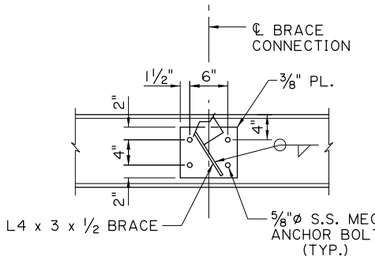

DETAIL A

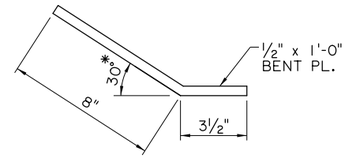

1/2" BENT PLATE DETAIL

* ANGLE IS APPROXIMATE. VARY AS NEEDED.

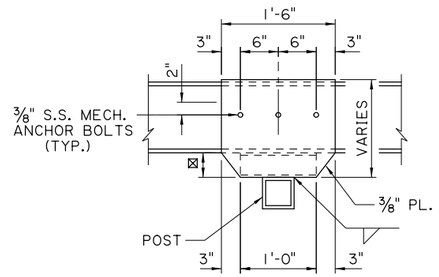

DETAIL B

⊠ = VARIES

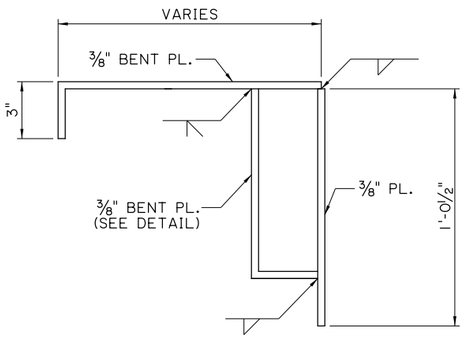

BARRIER CONNECTION DETAIL

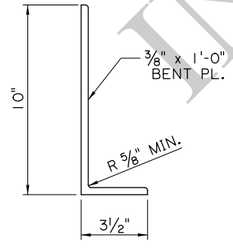

3/8" BENT PL. DETAIL

NOTES:

STRUCTURAL MEMBERS SHALL BE AASHTO M270 GRADE 50 STEEL AND SHALL BE HOT DIPPED GALVANIZED PER ASTM A-123. A325 BOLTS TO BE GALVANIZED PER ASTM A-153.

MECHANICAL ANCHOR BOLTS SHALL BE 5/8"ø STAINLESS STEEL (MIN. FY = 55 ksi) AND SHALL BE SELECTED FROM THE A.M.L. AND INSTALLED AS PER THE MANUFACTURER'S RECOMMENDATIONS. EACH ANCHOR SHALL HAVE AN ALLOWABLE CAPACITY OF 3 KIPS PULLOUT AND 3 KIPS SHEAR AFTER APPLICATION OF ANY REDUCTION FACTORS FOR ANCHOR SPACING AND EDGE DISTANCE.

WELDING SHALL BE IN ACCORDANCE WITH THE BRIDGE WELDING CODE OF THE AMERICAN WELDING SOCIETY (AWS D1.5-10), AND SECTION 809 OF THE LOUISIANA STANDARD SPECIFICATIONS FOR ROADS AND BRIDGES, 2016 EDITION.

NO PART OF ANY SIGN SHALL PROTRUDE INTO THE SHOULDER AREA. DIMENSIONS OF SUPPORT POST AND BRACKET SHALL BE ADJUSTED AS NEEDED PRIOR TO FABRICATION.

ANY PORTIONS OF THE EXISTING BARRIER THAT ARE DAMAGED SHALL BE REPAIRED TO THE SATISFACTION OF THE PROJECT ENGINEER.

DIMENSIONS RELATED TO THE BARRIER CONNECTION ARE BASED ON AS-BUILT DRAWINGS AND PREVIOUS STANDARDS. DIMENSIONS SHALL BE ADJUSTED AS NEEDED BASED ON FIELD MEASUREMENTS.

A 1/8" NEOPRENE PAD SHALL BE USED BETWEEN ALL STEEL AND CONCRETE CONTACT SURFACES.

MAX SIGN AREA = 40 SQFT.

FOR INFORMATIONAL USE

SHEET NUMBER

PARISH	CONTROL SECTION	STATE PROJECT

DESIGN	K. BRAUNER	DETAIL	K. BRAUNER	REVIEW	C. BOURGEOIS
CHECK	C. GUIDRY	CHECK	C. GUIDRY	SERIES #	14 OF 17

APPROVED BY CHIEF ENGINEER: DATE: 10/14/2025

NO.	DATE	REVISION OR CHANGE ORDER DESCRIPTION	BY

STATE OF LOUISIANA DEPARTMENT OF TRANSPORTATION AND DEVELOPMENT

Z - BRACKET SIGN SUPPORT (POST AND RAIL BARRIER)

ROADSIDE SIGNING STANDARDS

DOTD LOUISIANA DEPARTMENT OF TRANSPORTATION & DEVELOPMENT

STANDARD PLAN

9/10/2025

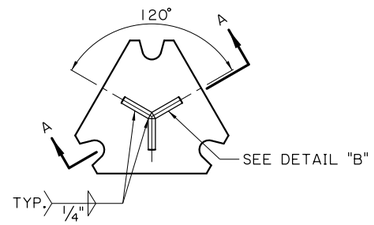

TOP VIEW STUB POST

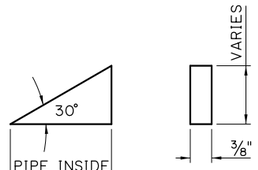

DETAIL "B"
3 REQ'D.

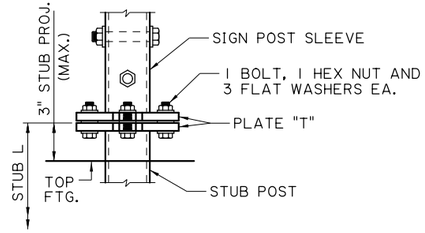

ELEVATION OF BASE CONNECTION
STEEL

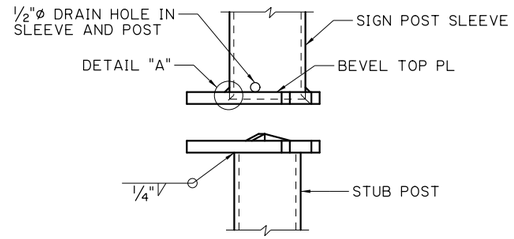

SECTION A-A

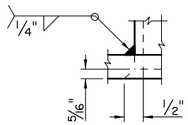

DETAIL "A"

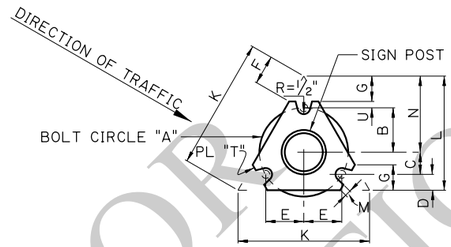

PLAN OF BASE

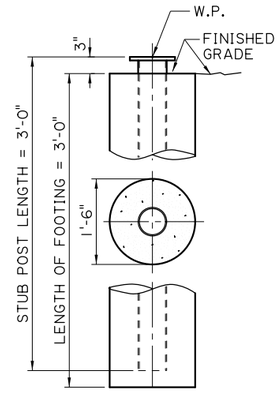

FOOTING DETAIL
PIPE SECTIONS

STEEL MULTI-DIRECTIONAL BASE CONNECTION DATA															
NOMINAL PIPE SIZE FOR POST SLEEVE	BOLT SIZE ⊙ & TORQUE	WELD SIZE	T	A	B	C	D	E	F	G	K	L	M	N	U
3½"ø SCH 40	5/8"ø T=226	3/8"	5/8"	7"	3½"	1¾"	1¼"	3"	2 5/16"	2"	10 3/8"	9"	½"	6"	½"

FOR STUB POST LENGTH & FOOTING DIMENSION SEE FOOTING DETAIL.

⊙TORQUE IN INCH-LBS., BOLTS ARE HIGH STRENGTH

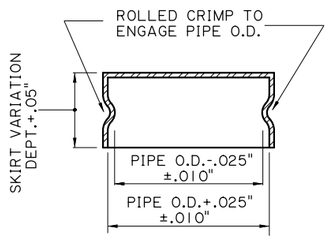

FRICTION CAP DETAIL
(USED AT TOP OF ALL POSTS)

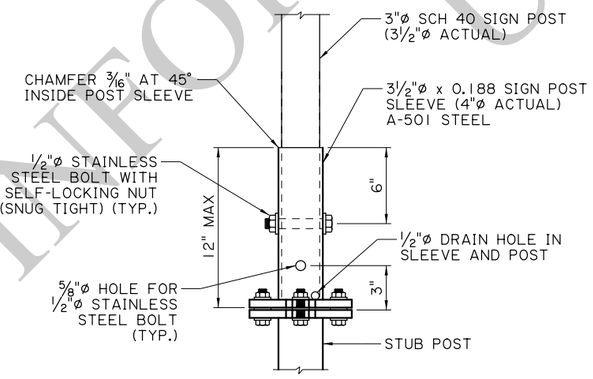

POST SLEEVE DETAIL

PROCEDURE FOR ASSEMBLY OF BASE CONNECTION:

SPECIAL CARE SHALL BE TAKEN TO SET THE BASE PLUMB TO AVOID EXCESSIVE SHIMMING AT THE BREAK-AWAY FEATURE AFTER FINAL INSTALLATION. EXCESSIVE SHIMMING COULD IMPAIR THE BREAK-AWAY FEATURE FOR WHICH THIS INSTALLATION WAS DESIGNED. SHIM PACKS SHOWN ON THIS DRAWING SHOULD BE SUFFICIENT TO ALLOW FOR NORMAL MISALIGNMENT.

1. BASE SHALL BE ALIGNED AND SET PLUMB BEFORE OR IMMEDIATELY AFTER POURING CONCRETE FOOTING.
2. H.S. BOLTS IN BASE PLATE SHALL BE TIGHTENED TO THE PRESCRIBED TORQUE. CARE SHALL BE TAKEN TO AVOID OVERTIGHTING.

FRICTION CAPS:

CAPS MAY BE MANUFACTURED FROM EITHER HOT ROLLED OR COLD ROLLED STEEL SHEETS. THE MINIMUM SHEET METAL THICKNESS SHALL BE 24 GAUGE. THE RIM EDGES SHALL BE REASONABLY STRAIGHT AND SMOOTH. CAPS SHALL BE SIZED AND FORMED IN SUCH A MANNER AS TO PRODUCE A DRIVE-ON FRICTION FIT AND HAVE NO TENDENCY TO ROCK WHEN SEATED ON THE PIPE. THE DEPTH SHALL BE SUFFICIENT TO GIVE POSITIVE PROTECTION AGAINST ENTRANCE OF RAINWATER. THEY SHALL BE FREE OF SHARP CREASES OR INDENTATIONS AND SHOW NO EVIDENCE OF METAL FRACTURE. CAPS SHALL HAVE A ELECTRODEPOSITED COATING OF ZINC IN ACCORDANCE WITH THE REQUIREMENTS OF A.S.T.M. SPECIFICATION B633 SC4, TYPE 1.

GALVANIZING:

ALL STEEL POST, PLATE, AND SLEEVE MEMBERS SHALL BE GALVANIZED PER ASTM A-123.

ALL MISC. HARDWARE (EXCEPT FOR STAINLESS STEEL BOLTS) SHALL BE GALVANIZED PER ASTM A-153.

FOR INFORMATIONAL USE

SHEET NUMBER

PARISH | CONTROL SECTION | STATE PROJECT

DESIGN K. BRAUNER | DETAIL K. BRAUNER | REVIEW C. BOURGEOIS
CHECK C. GUIDRY | CHECK C. GUIDRY | SERIES # 15 OF 17

APPROVED BY CHIEF ENGINEER: DATE: 10/14/2025

REVISION OR CHANGE ORDER DESCRIPTION | BY

NO. | DATE

STATE OF LOUISIANA DEPARTMENT OF TRANSPORTATION AND DEVELOPMENT

CONTRAFLOW SIGNS (GROUND MOUNTED)

ROADSIDE SIGNING STANDARDS

DOTD LOUISIANA DEPARTMENT OF TRANSPORTATION & DEVELOPMENT

STANDARD PLAN

9/10/2025

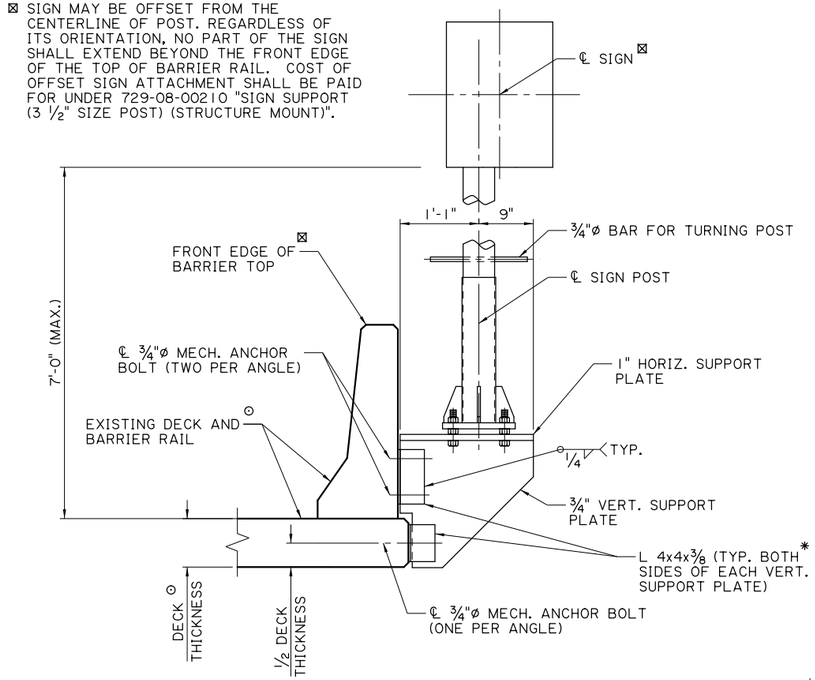

ELEVATION

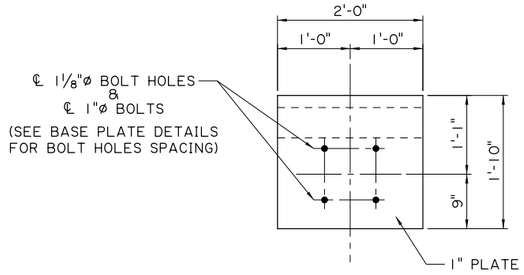

1" HORIZ. SUPPORT PLATE

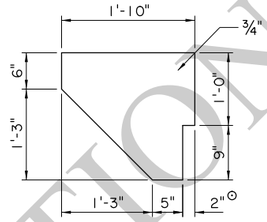

¾" VERT. SUPPORT PLATE

SIGN SUPPORT BRACKET DETAILS

NOTES:

STRUCTURAL MEMBERS SHALL BE AASHTO M270 GRADE 50 STEEL AND SHALL BE HOT DIPPED GALVANIZED PER ASTM A-123. ALL MISC. HARDWARE (EXCEPT STAINLESS STEEL BOLTS) SHALL BE GALVANIZED AS PER ASTM A-153.

⊙ ALL EXISTING DIMENSIONS ARE TO BE VERIFIED BY THE CONTRACTOR PRIOR TO FABRICATION. ANY ADJUSTMENTS TO SUPPORT BRACKET DIMENSIONS SHALL BE APPROVED BY THE ENGINEER.

* EQUIVALENT BENT PLATES MAY BE USED. ADJUST ANGLE OF BEND AS NEEDED TO ATTACH TO BARRIER RAIL.

PAYMENT FOR THE TYPE "A" SIGN POST AND SUPPORT BRACKET SHALL BE UNDER ITEM NO. 729-08-00210, "SIGN SUPPORT (3 ½" SIZE POST) (STRUCTURE MOUNT)".

MECHANICAL ANCHOR BOLTS SHALL BE ¾"ø STAINLESS STEEL (MIN. FY = 55 ksi) AND SHALL BE SELECTED FROM THE A.M.L. AND INSTALLED AS PER THE MANUFACTURER'S RECOMMENDATIONS. EACH ANCHOR SHALL HAVE AN ALLOWABLE CAPACITY OF 3 KIPS PULLOUT AND 3 KIPS SHEAR AFTER APPLICATION OF ANY REDUCTION FACTORS FOR ANCHOR SPACING AND EDGE DISTANCE.

A ⅛" NEOPRENE PAD SHALL BE USED BETWEEN ALL STEEL AND CONCRETE CONTACT SURFACES.

ANY PORTIONS OF THE EXISTING BARRIER THAT ARE DAMAGED SHALL BE REPAIRED TO THE SATISFACTION OF THE PROJECT ENGINEER.

REGARDLESS OF ITS ORIENTATION, NO PART OF ANY SIGN SHALL EXTEND BEYOND THE FRONT EDGE OF THE TOP OF BARRIER RAIL. DIMENSIONS OF SUPPORT POST AND BRACKET SHALL BE ADJUSTED AS NEEDED PRIOR TO FABRICATION.

MAXIMUM ALLOWABLE SIGN AREA = 20 SQ. FT.

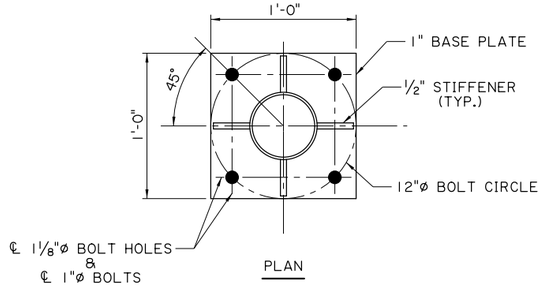

PLAN

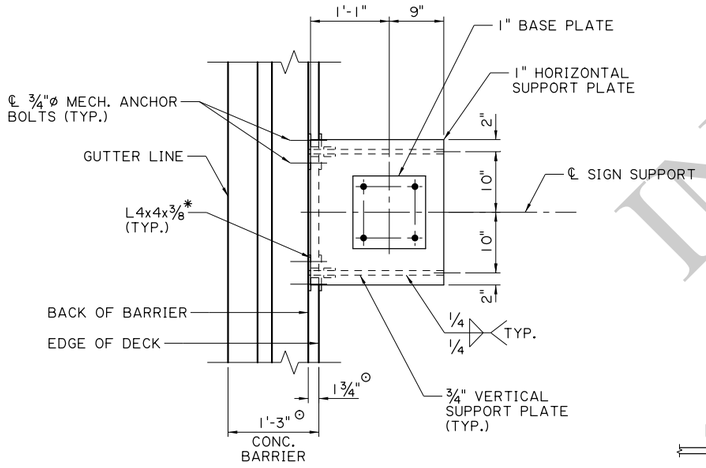

PLAN

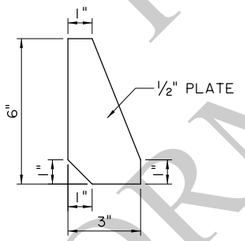

½" STIFFENER

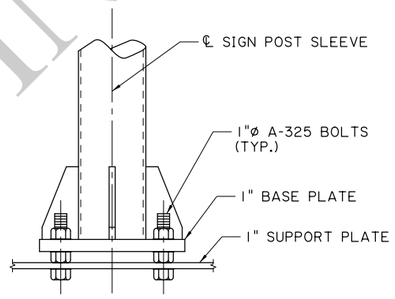

1"ø BOLT DETAIL

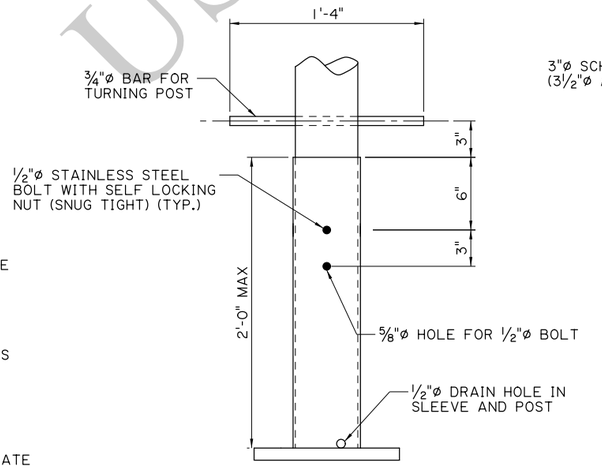

⅝"ø BOLT DETAIL

(STIFFENERS NOT SHOWN FOR CLARITY)

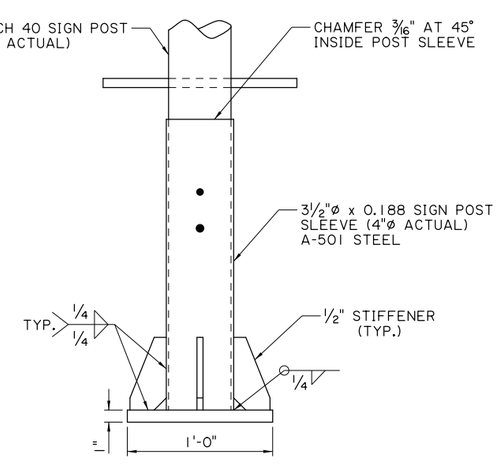

ELEVATION

1" BASE PLATE & SIGN POST SLEEVE DETAILS

FOR INFORMATIONAL USE

SHEET NUMBER		
PARISH	CONTROL SECTION	STATE PROJECT
DESIGN K. BRAUNER	DETAIL K. BRAUNER	REVIEW C. BOURGEOIS
CHECK C. GUIDRY	CHECK C. GUIDRY	SERIES # 16 OF 17

APPROVED BY CHIEF ENGINEER: DATE: 10/14/2025

NO.	DATE	REVISION OR CHANGE ORDER DESCRIPTION	BY

CONTRAFLOW SIGNS
(F - SHAPE BARRIER)

ROADSIDE SIGNING STANDARDS

DOTD LOUISIANA DEPARTMENT OF TRANSPORTATION & DEVELOPMENT

STANDARD PLAN

9/10/2025

⊠ SIGN MAY BE OFFSET FROM THE CENTERLINE OF POST. REGARDLESS OF ITS ORIENTATION, NO PART OF THE SIGN SHALL EXTEND BEYOND THE FRONT EDGE OF THE TOP OF BARRIER RAIL. COST OF OFFSET SIGN ATTACHMENT SHALL BE PAID FOR UNDER 729-08-00210 "SIGN SUPPORT (3½" SIZE POST) (STRUCTURE MOUNT)".

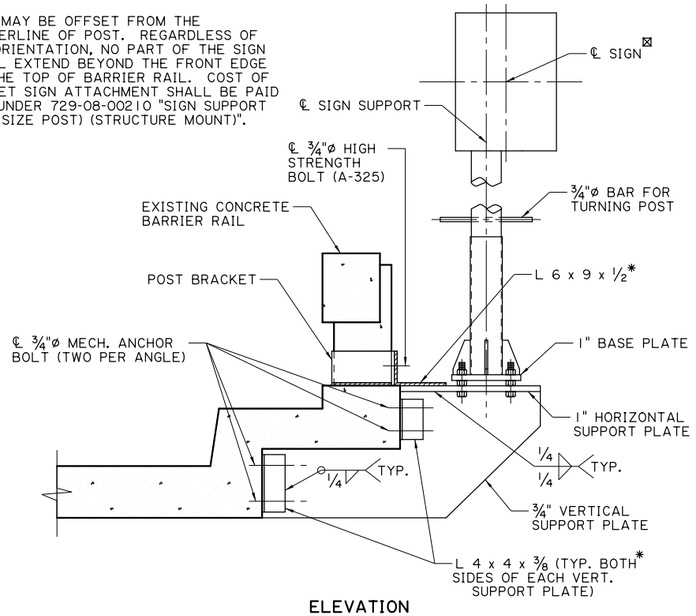

ELEVATION

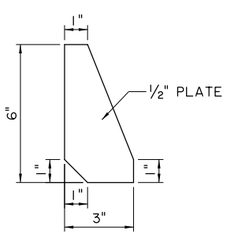

½" STIFFENER

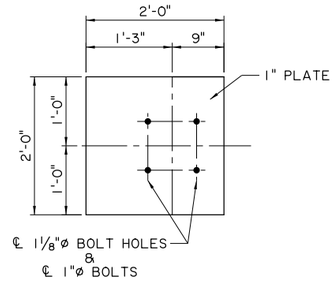

1" HORIZONAL SUPPORT PLATE
(SEE BASE PLATE DETAILS FOR BOLT HOLES SPACING)

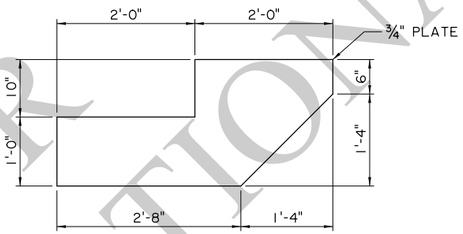

¾" VERT. SUPPORT PLATE ⊙

SIGN SUPPORT BRACKET DETAILS

NOTES:

STRUCTURAL MEMBERS SHALL BE AASHTO M270 GRADE 50 STEEL AND SHALL BE HOT DIPPED GALVANIZED PER ASTM A-123. ALL MISC. HARDWARE (EXCEPT STAINLESS STEEL BOLTS) SHALL BE GALVANIZED AS PER ASTM A-153.

⊙ ALL EXISTING DIMENSIONS ARE TO BE VERIFIED BY THE CONTRACTOR PRIOR TO FABRICATION. ANY ADJUSTMENTS TO SUPPORT BRACKET DIMENSIONS SHALL BE APPROVED BY THE ENGINEER.

✱ EQUIVALENT BENT PLATES MAY BE USED. ADJUST ANGLE OF BEND AS NEEDED TO ATTACH TO BARRIER RAIL.

PAYMENT FOR THE TYPE "A" SIGN POST AND SUPPORT BRACKET SHALL BE UNDER ITEM NO. 729-08-00210, "SIGN SUPPORT (3½" SIZE POST) (STRUCTURE MOUNT)".

MECHANICAL ANCHOR BOLTS SHALL BE ¾"ø STAINLESS STEEL (MIN. FY = 55 ksi) AND SHALL BE SELECTED FROM THE A.M.L. AND INSTALLED AS PER THE MANUFACTURER'S RECOMMENDATIONS. EACH ANCHOR SHALL HAVE AN ALLOWABLE CAPACITY OF 3 KIPS PULLOUT AND 3 KIPS SHEAR AFTER APPLICATION OF ANY REDUCTION FACTORS FOR ANCHOR SPACING AND EDGE DISTANCE.

A ⅛" NEOPRENE PAD SHALL BE USED BETWEEN ALL STEEL AND CONCRETE CONTACT SURFACES.

ANY PORTIONS OF THE EXISTING BARRIER THAT ARE DAMAGED SHALL BE REPAIRED TO THE SATISFACTION OF THE PROJECT ENGINEER.

REGARDLESS OF ITS ORIENTATION, NO PART OF ANY SIGN SHALL EXTEND BEYOND THE FRONT EDGE OF THE TOP OF BARRIER RAIL. DIMENSIONS OF SUPPORT POST AND BRACKET SHALL BE ADJUSTED AS NEEDED PRIOR TO FABRICATION.

MAXIMUM ALLOWABLE SIGN AREA = 20 SQ. FT.

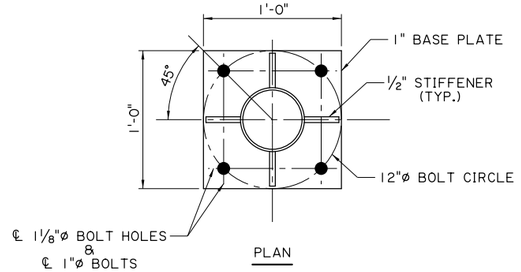

PLAN

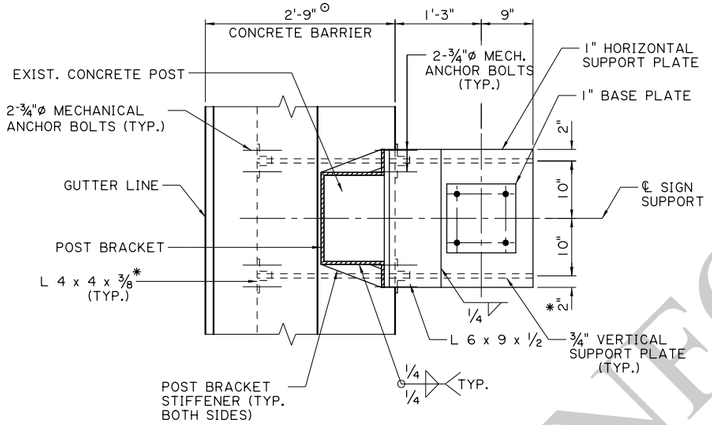

PLAN

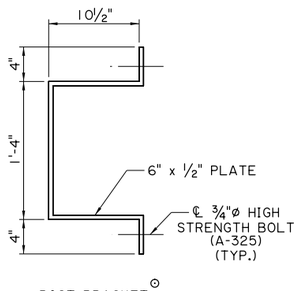

POST BRACKET ⊙

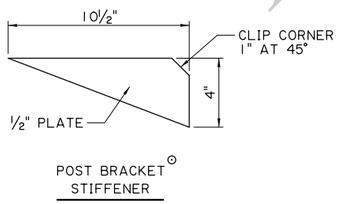

POST BRACKET STIFFENER ⊙

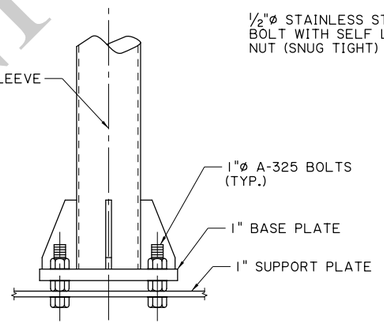

1"ø BOLT DETAIL

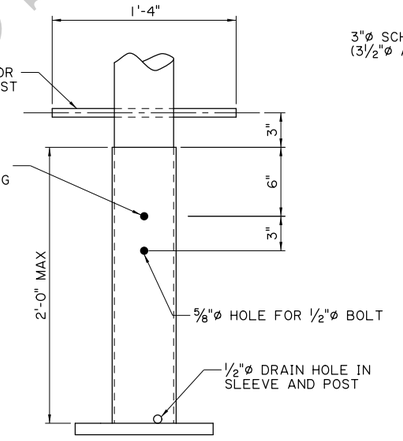

⅝"ø BOLT DETAIL
(STIFFENERS NOT SHOWN FOR CLARITY)

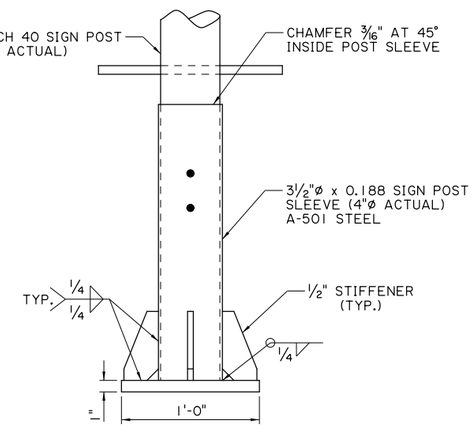

ELEVATION

I" BASE PLATE & SIGN POST SLEEVE DETAILS

FOR INFORMATIONAL USE

SHEET NUMBER

PARISH	CONTROL SECTION	STATE PROJECT

DESIGN	K. BRAUNER
CHECK	C. GUIDRY
DETAIL	K. BRAUNER
CHECK	C. GUIDRY
REVIEW	C. BOURGEOIS
SERIES #	17 OF 17

APPROVED BY CHIEF ENGINEER: DATE: 10/14/2025

NO.	DATE	REVISION OR CHANGE ORDER DESCRIPTION	BY

STATE OF LOUISIANA DEPARTMENT OF TRANSPORTATION AND DEVELOPMENT

CONTRAFLOW SIGNS (POST AND RAIL BARRIER)

ROADSIDE SIGNING STANDARDS

DOTD LOUISIANA DEPARTMENT OF TRANSPORTATION & DEVELOPMENT

STANDARD PLAN

NOTE: MINIMUM CONCRETE COVER SHALL BE 3" FOR THE RETAINING SIDE OF THE WALL AND FOR THE FOOTING, AND 2" FOR THE OPEN SIDE OF THE WALL.

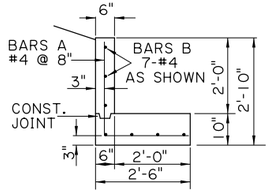

TYPE L2

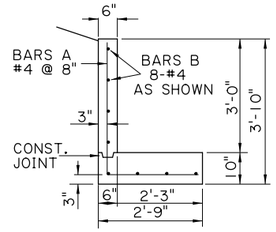

TYPE L3

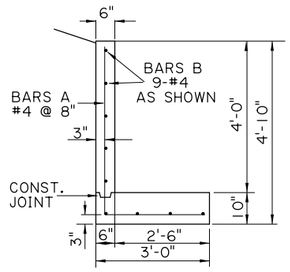

TYPE L4

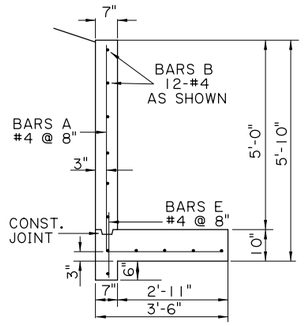

TYPE L5

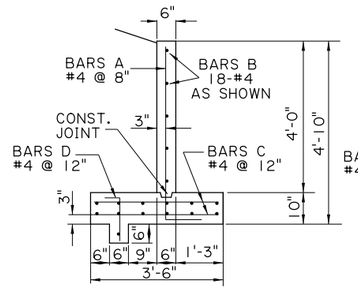

TYPE T4

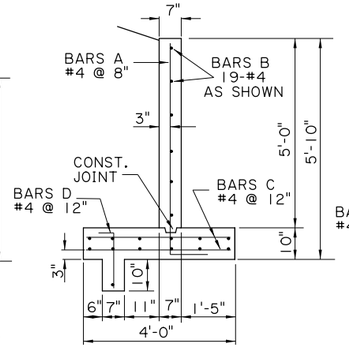

TYPE T5

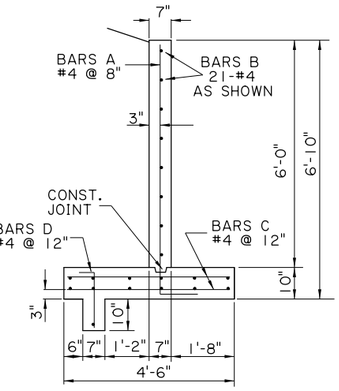

TYPE T6

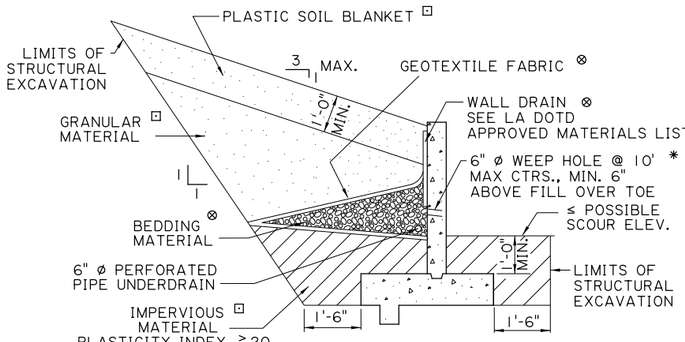

WALL WITH SLOPING BACKFILL

T-WALL SHOWN. L-WALL SIMILAR.

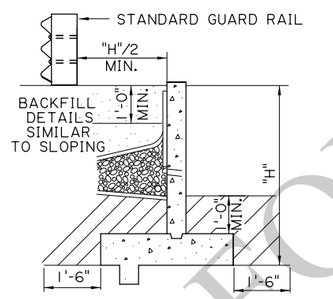

WALL WITH HORIZONTAL BACKFILL

T-WALL SHOWN. L-WALL SIMILAR.

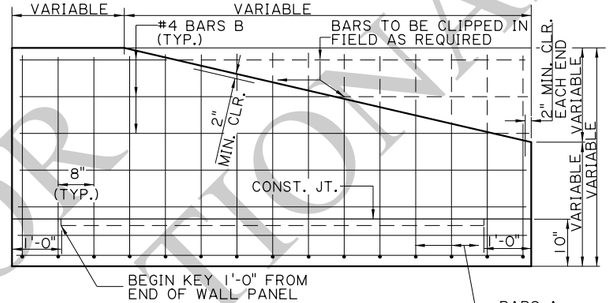

TYPICAL ELEVATION

SHOWING REINFORCEMENT DETAILS
SHEAR KEY NOT SHOWN FOR CLARITY

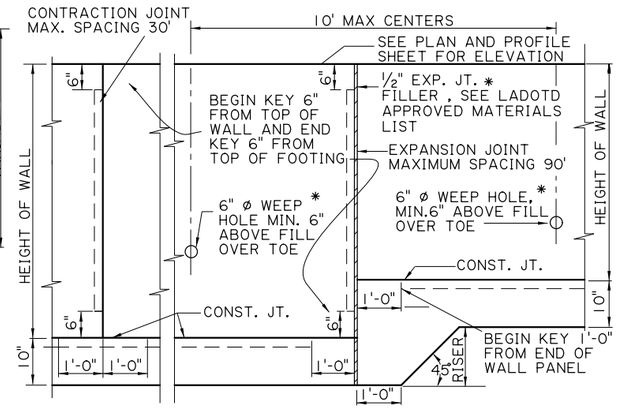

PART ELEVATION OF RETAINING WALL

SHOWING RISER UNDER FOOTING

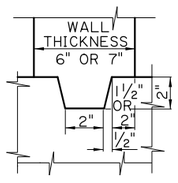

WALL TO FOOTING KEY DETAIL

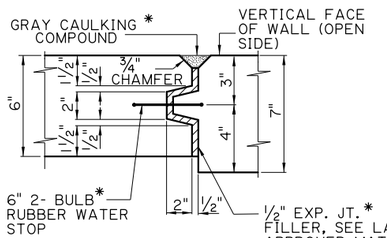

EXPANSION JOINT DETAIL

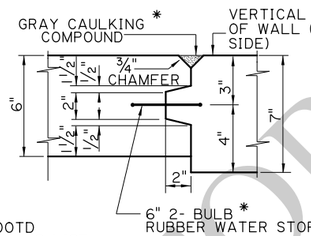

CONTRACTION JOINT DETAIL

REBAR DIMENSIONS

WALL TYPE	SIZE	BAR A a	BAR A b	BAR A LENGTH	BAR C LENGTH	BAR D LENGTH	BAR E LENGTH
L2	#4	2'-5"	2'-1"	4'-6"	—	—	—
L3	#4	3'-5"	2'-4"	5'-9"	—	—	—
L4	#4	4'-5"	2'-7"	7'-0"	—	—	—
L5	#4	5'-5"	3'-1"	8'-6"	—	—	1'-6"
T4	#4	4'-5"	0'-10"	5'-3"	3'-2"	1'-3"	—
T5	#4	5'-5"	1'-1"	6'-6"	3'-8"	1'-7"	—
T6	#4	6'-5"	1'-4"	7'-9"	4'-2"	1'-7"	—

NOTES:
ALL BARS ARE #4
BARS B,C,& E ARE STRAIGHT
BAR B LENGTH = WALL LENGTH BETWEEN JOINTS MINUS 4"

MATERIAL QUANTITIES

PER LINEAR FOOT OF WALL

WALL TYPE	L2	L3	L4	L5	T4	T5	T6
CLASS A1 CONCRETE CUYD	0.077	0.140	0.167	0.211	0.191	0.249	0.287
DEFORMED REINFORCING STEEL LB	9.2	11.0	13.0	18.0	22.4	25.2	28.4

6" ø PERFORATED PIPE UNDERDRAIN WILL BE PAID PER LIN. FT.

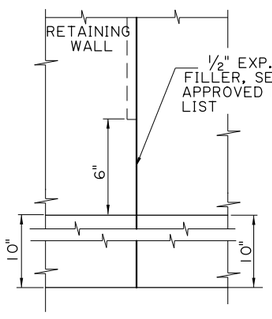

FOOTING EXPANSION JOINT DETAIL

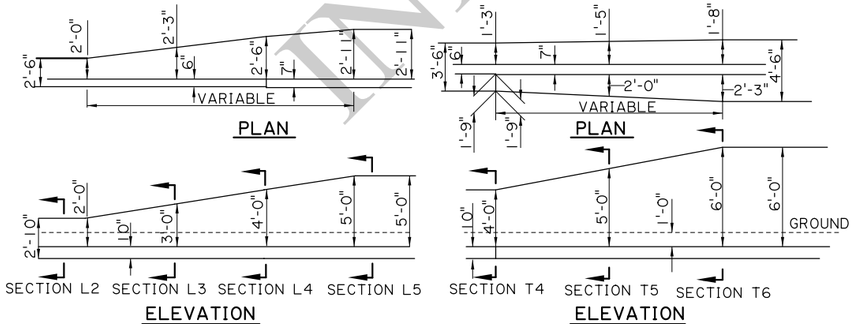

SLOPING RETAINING WALL

BAR A

BAR D

NOTES:

1. STRUCTURAL CONCRETE CAPACITY HAS BEEN DESIGNED IN ACCORDANCE WITH AASHTO LRFD FOURTH EDITION 2007 WITH 2008 AND 2009 INTERIM SPECIFICATIONS.
2. USE CLASS A1 CONCRETE. CHAMFER ALL EXPOSED CORNERS ¾".
3. DEFORMED REINFORCING BARS SHALL BE GRADE 60. DIMENSIONS RELATING TO REINFORCING STEEL SPACING ARE TO BAR CENTERS.
4. MAXIMUM SPACING OF EXPANSION JOINT IS 90 FT.
5. MAXIMUM SPACING OF CONTRACTION JOINT IS 30 FT.
6. INSTALL WALL DRAIN AND PERFORATED PIPE UNDERDRAIN CONFORMING TO THE SPECIFICATIONS.

* TO BE INCLUDED WITH COST OF CLASS A1 CONCRETE.

⊗ TO BE INCLUDED WITH COST OF PERFORATED PIPE UNDERDRAIN.

⊡ BACKFILL MATERIAL TO BE INCIDENTAL TO STRUCTURAL EXCAVATION IN CUT SECTION AND WILL BE PAID FOR AS EMBANKMENT IN FILL SECTION.

FOR INFORMATIONAL

SHEET NUMBER

PARISH | CONTROL SECTION | STATE PROJECT

DESIGN T. LE | DETAIL G. GRASS | REVIEW | SERIES # 1 OF 1

CHECK J. PELTIER | CHECK A.LANCASTER

APPROVED BY CHIEF ENGINEER: DATE: 11/24/2025

REVISION OR CHANGE ORDER DESCRIPTION | BY | NO. | DATE

MISC. RETAINING WALL DETAILS T & L TYPES 2'-0" THROUGH 6'-0" HEIGHTS

RW-01

DOTD LOUISIANA DEPARTMENT OF TRANSPORTATION & DEVELOPMENT

STANDARD PLAN

11:0 11/8/2025

IP_PWP:d1233891\RW-01.dgn

TABLE 1

CORRUGATED STEEL PIPE
(2 2/3 INCH X 1/2 INCH CORRUGATION)

PIPE DIAMETER INCHES	HEIGHT OF FILL ABOVE TOP OF PIPE IN FEET								MIN. COVER INCHES
	1-10	10.1-15	15.1-20	20.1-25	25.1-30	30.1-35	35.1-40	40.1-50	
8 OR LESS	14 (16)	14 (16)	14 (16)	14 (16)	14 (16)	14 (16)	14 (16)	14 (16)	9
10	14 (16)	14 (16)	14 (16)	14 (16)	14 (16)	14 (16)	14 (16)	14 (16)	9
12	14 (16)	14 (16)	14 (16)	14 (16)	14 (16)	14 (16)	14 (16)	14 (16)	9
15	14 (16)	14 (16)	14 (16)	14 (16)	14 (16)	14 (16)	14 (16)	14 (16)	9
18	14 (16)	14 (16)	14 (16)	14 (16)	14 (16)	14 (16)	14 (16)	14	9
21	14 (16)	14 (16)	14 (16)	14 (16)	14 (16)	14 (16)	14 (16)	14	9
24	14 (16)	14 (16)	14 (16)	14 (16)	14 (16)	14 (16)	14 (16)	12	9
30	14 (16)	14 (16)	14 (16)	14 (16)	14 (16)	14	12	8	9
36	14 (16)	14 (16)	14 (16)	14 (16)	14	14	10	--	9
42	14 (16)	14 (16)	14 (16)	14 (16)	14	14	12	--	9
48	14 (16)	14 (16)	14 (16)	14 (16)	14	14	12	--	9
54	14	14	14	14	14	12	12	--	9
60	12	12	12	12	12	12	12	--	9
66	10	10	10	10	10	10	10	--	9
72	10	10	10	10	10	10	10	--	9
78	8	8	8	8	8	8	--	--	9
84	8	8	8	8	8	8	--	--	9

DOUBLE LINE RIVETS — SINGLE LINE RIVETS

TABLE 2

CORRUGATED STEEL PIPE
(5 INCH X 1 INCH CORRUGATION AND
3 INCH X 1 INCH CORRUGATION)

PIPE DIAMETER INCHES	HEIGHT OF FILL ABOVE TOP OF PIPE IN FEET								MIN. COVER INCHES
	1-10	10.1-15	15.1-20	20.1-25	25.1-30	30.1-35	35.1-40	41.1-50	
36	14 (16)	14 (16)	14 (16)	14 (16)	14 (16)	14 (16)	14 (16)	14	9
42	14 (16)	14 (16)	14 (16)	14 (16)	14 (16)	14 (16)	14 (16)	14	9
48	14 (16)	14 (16)	14 (16)	14 (16)	14 (16)	14 (16)	14	12	9
54	14 (16)	14 (16)	14 (16)	14 (16)	14 (16)	14	12	12	9
60	14 (16)	14 (16)	14 (16)	14 (16)	14	14	12	10	9
66	14 (16)	14 (16)	14 (16)	14 (16)	14	12	12	8	9
72	14 (16)	14 (16)	14 (16)	14	12	12	12	--	9
78	14 (16)	14 (16)	14 (16)	14	12	12	12	--	9
84	14 (16)	14 (16)	14 (16)	14	12	12	10	--	9
90	14 (16)	14 (16)	14	12	12	12	10	--	12
96	14	14	14	12	12	10	8	--	12
102	14	14	14	12	12	10	8	--	12
108	12	12	12	12	10	8	--	--	12
114	12	12	12	12	10	8	--	--	12
120	12	12	12	12	10	8	--	--	12
126	10	10	10	10	10	--	--	--	12
132	10	10	10	10	8	--	--	--	12
138	10	10	10	10	8	--	--	--	12
144	8	8	8	8	--	--	--	--	12

TABLE 3

CORRUGATED STEEL PIPE ARCH
(5 INCH X 1 INCH CORRUGATION AND
3 INCH X 1 INCH CORRUGATION)

EQUIV. PIPE DIAMETER INCHES	C.M. PIPE ARCH SPAN X RISE INCHES	HEIGHT OF FILL ABOVE TOP OF ARCH (FEET)		MIN. COVER INCHES
		1-4	4.1-9	
36	40 X 31	14 (16)	14 (16)	9
42	46 X 36	14 (16)	14 (16)	9
48	53 X 41	14 (16)	14 (16)	9
54	60 X 46	14 (16)	14 (16)	9
60	66 X 51	14 (16)	14 (16)	9
66	73 X 55	14	14	9
72	81 X 59	14	14	9
78	87 X 63	14	14	9
84	95 X 67	14	14	9
90	103 X 71	12	12	12
96	112 X 75	12	12	12
102	117 X 79	12	12	12
108	128 X 83	10	10	12
114	137 X 87	10	10	12
120	142 X 91	8	8	12

TABLE 4

CORRUGATED STEEL PIPE ARCH
(2 2/3 INCH X 1/2 INCH CORRUGATION)

EQUIV. PIPE DIAMETER INCHES	C.M. PIPE ARCH SPAN X RISE INCHES	HEIGHT OF FILL ABOVE TOP OF ARCH (FEET)		MIN. COVER INCHES
		1-4	4.1-9	
15	17 X 13	14 (16)	14 (16)	9
18	21 X 15	14 (16)	14 (16)	9
21	24 X 18	14 (16)	14 (16)	9
24	28 X 20	14 (16)	14 (16)	9
30	35 X 24	14 (16)	14 (16)	9
36	42 X 29	14 (16)	14 (16)	9
42	49 X 33	14	14	9
48	57 X 38	12	12	9
54	64 X 43	12	12	9
60	71 X 47	10	10	9
66	77 X 52	8	8	9
72	83 X 57	8	8	9

TABLE 5

CORRUGATED ALUMINUM PIPE
(2 2/3 INCH X 1/2 INCH CORRUGATION)

PIPE DIAMETER INCHES	HEIGHT OF FILL ABOVE TOP OF PIPE IN FEET								MIN. COVER INCHES
	1-10	10.1-15	15.1-20	20.1-25	25.1-30	30.1-35	35.1-40	40.1-50	
8 OR LESS	14 (16)	14 (16)	14 (16)	14 (16)	14 (16)	14 (16)	14 (16)	14 (16)	9
10	14 (16)	14 (16)	14 (16)	14 (16)	14 (16)	14 (16)	14 (16)	14 (16)	9
12	14 (16)	14 (16)	14 (16)	14 (16)	14 (16)	14 (16)	14 (16)	12	9
15	14 (16)	14 (16)	14 (16)	14 (16)	14 (16)	14	12	12	9
18	14 (16)	14 (16)	14 (16)	14 (16)	14 (16)	12	12	12	9
21	14 (16)	14 (16)	14 (16)	14 (16)	12	12	12	--	9
24	14 (16)	14 (16)	14	12	12	12	10	--	9
30	14 (16)	14 (16)	12	12	12	--	--	--	9
36	14	14	12	12	--	--	--	--	9
42	14	14	14	14	12	12	12	--	9
48	14	14	12	12	12	12	10	--	9
54	12	12	12	12	12	12	--	--	9
60	10	10	10	10	10	--	--	--	9
66	10	10	10	10	10	--	--	--	9
72	8	8	8	8	--	--	--	--	9

TABLE 6

CORRUGATED ALUMINUM PIPE
(3 INCH X 1 INCH CORRUGATION)

PIPE DIAMETER INCHES	HEIGHT OF FILL ABOVE TOP OF PIPE IN FEET								MIN. COVER INCHES
	1-10	10.1-15	15.1-20	20.1-25	25.1-30	30.1-35	35.1-40	40.1-50	
36	14 (16)	14 (16)	14 (16)	14 (16)	14 (16)	14	14	14	9
42	14 (16)	14 (16)	14 (16)	14 (16)	14	14	14	10	9
48	14 (16)	14 (16)	14 (16)	14	14	14	14	8	9
54	14 (16)	14 (16)	14	14	14	14	12	--	9
60	14 (16)	14 (16)	14	14	14	14	12	--	9
66	14 (16)	14 (16)	14	14	14	12	12	--	9
72	14	14	14	14	12	12	12	--	9
78	14	14	14	14	12	12	12	--	9
84	12	12	12	12	12	12	10	--	9
90	12	12	12	12	12	12	10	--	12
96	12	12	12	12	12	10	8	--	12
102	10	10	10	10	10	10	8	--	12
108	10	10	10	10	10	10	--	--	12
114	8	8	8	8	8	8	--	--	12
120	8	8	8	8	8	8	--	--	12

TABLE 7

CORRUGATED ALUMINUM PIPE
(6 INCH X 1 INCH CORRUGATION)

PIPE DIAMETER INCHES	HEIGHT OF FILL ABOVE TOP OF PIPE IN FEET								MIN. COVER INCHES
	1-10	10.1-15	15.1-20	20.1-25	25.1-30	30.1-35	35.1-40	40.1-50	
30	14 (16)	14 (16)	14 (16)	14 (16)	14	14	12	12	9
36	14 (16)	14 (16)	14 (16)	14	14	14	12	10	9
42	14 (16)	14 (16)	14 (16)	14	14	12	12	10	9
48	14 (16)	14 (16)	14 (16)	14	12	12	10	--	9
54	14 (16)	14 (16)	14 (16)	12	12	10	8	--	9
60	14 (16)	14 (16)	14 (16)	12	10	10	8	--	9
66	14 (16)	14 (16)	14	12	10	8	--	--	9
72	12	12	12	10	8	--	--	--	9
84	10	10	10	10	--	--	--	--	9
96	8	8	8	8	--	--	--	--	12

TABLE 8

CORRUGATED ALUMINUM PIPE ARCH
(2 2/3 INCH X 1/2 INCH CORRUGATION)

EQUIV. PIPE DIAMETER INCHES	C.A. PIPE ARCH SPAN X RISE INCHES	HEIGHT OF FILL ABOVE TOP OF ARCH (FEET)		MIN. COVER INCHES
		1-4	4.1-9	
15	17 X 13	14 (16)	14 (16)	9
18	21 X 15	14 (16)	14 (16)	9
21	24 X 18	14 (16)	14 (16)	9
24	28 X 20	14 (16)	14 (16)	9
30	35 X 24	14	14	9
36	42 X 29	14	14	9
42	49 X 33	12	12	9
48	57 X 38	10	10	9
54	64 X 43	10	10	9
60	71 X 47	8	8	9
66	77 X 52	8	8	9

GENERAL NOTES

1) MINIMUM PIPE WALL THICKNESS AND COATING REQUIREMENTS FOR ALL METAL PIPE WILL BE AS SHOWN ON THE PROJECT PLANS UNDER " SUMMARY OF DRAINAGE STRUCTURES ".

2) JOINT TYPES FOR ALL CIRCULAR AND ARCH METAL PIPE SHALL CONFORM TO CURRENT LA DOTD STANDARD SPECIFICATIONS AND SHALL BE AS SHOWN ON THE SUMMARY OF DRAINAGE STRUCTURE PLAN SHEETS.

GAGE NO.	16	14	12	10	8	
THICKNESS (IN.)	0.060	0.075	0.105	0.135	0.164	ALUMINUM
	0.064	0.079	0.109	0.138	0.168	GALVANIZED STEEL

3) PIPE WALL THICKNESS SHOWN ON PROJECT PLANS MAY VARY FROM PIPE WALL THICKNESS SHOWN IN TABLES DUE TO LOCAL PH, RESISTIVITY AND ABRASIVE CONDITIONS.

4) MINIMUM COVER IS MEASURED FROM TOP OF PIPE TO THE TOP OF THE SUBGRADE. MINIMUM COVER SHOWN IS ADEQUATE FOR H-20 LOADING WHEN PAVEMENT IS IN PLACE. DURING CONSTRUCTION, WHEN HEAVY LOADS MAY BE DRIVEN OVER OR CLOSE TO BURIED STRUCTURE, IT IS THE CONTRACTOR'S RESPONSIBILITY TO PROVIDE THE ADDITIONAL COVER NEEDED TO PROTECT THE PIPE.

5) MAXIMUM FILL HEIGHT IS MEASURED FROM TOP OF PIPE TO TOP OF SURFACING.

6) SEE STANDARD SPECIFICATIONS AND STANDARD PLAN BM-01 FOR DETAILS OF BACKFILL PROCEDURES. SPECIAL CARE SHOULD BE TAKEN TO THOROUGHLY COMPACT BACKFILL UNDER PIPE HAUNCHES.

7) FOR CIRCULAR PIPE, THE AVERAGE INSIDE DIAMETER SHALL NOT VARY MORE THAN 1% OR 1/2", WHICHEVER IS GREATER, FROM THE NOMINAL DIAMETER.

8) FOR ARCH PIPE A TOLERANCE OF 1" ± OR 2% OF EQUIVALENT CIRCULAR DIAMETER, WHICHEVER IS GREATER, WILL BE PERMISSIBLE IN SPAN AND RISE.

9) GAGES SHOWN IN PARENTHESES MEET AASHTO REQUIREMENTS AND ARE THE GAGE WHICH WOULD NORMALLY BE USED. THE HEAVIER GAGES (NOT IN PARENTHESES) SHOULD BE USED ON DOTD PROJECTS.

FOR INFORMATIONAL PURPOSES ONLY

SHEET NUMBER

PARISH | CONTROL SECTION | STATE PROJECT

DESIGN CDJ | DETAIL KAJ | REVIEW WMR | SERIES # 1 OF 2

CHECK HJB | CHECK WMR

APPROVED BY CHIEF ENGINEER: DATE: 6/1/2026

NO.	DATE	REVISION OR CHANGE ORDER DESCRIPTION	BY

STATE OF LOUISIANA

METAL PIPE WALL THICKNESS AND CONNECTING BANDS FILL HEIGHT FOR METAL PIPE

SAM-1

DOTD LOUISIANA DEPARTMENT OF TRANSPORTATION & DEVELOPMENT

STANDARD PLAN

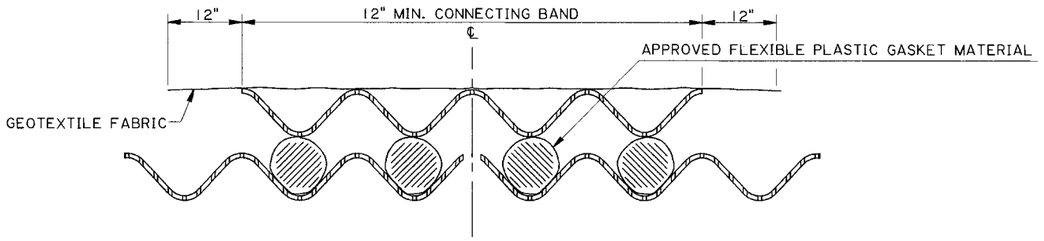

FOR PIPES LESS THAN OR EQUAL TO 36" ROUND OR EQUIVALENT ARCH

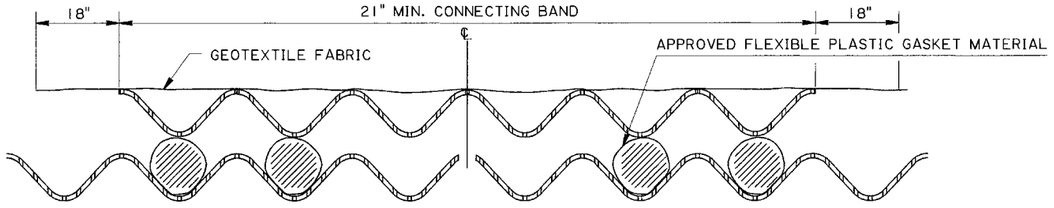

FOR PIPES GREATER THAN 36" ROUND OR EQUIVALENT ARCH
AND FOR ALL SIZES OF 6 X 1 AND 5 X 1 CORRUGATIONS

METHOD OF SEALING ANNULAR JOINT AT CONNECTING BAND WHERE TWO PIPE SECTIONS ARE JOINED

FLEXIBLE PLASTIC GASKET SYSTEM

T2 & T3 JOINTS AS SHOWN (WITH RODS & LUGS).
T1 JOINT SIMILAR, EXCEPT REQUIRES ONLY ONE STRIP OF PLASTIC GASKET MATERIAL IN SECOND CORRUGATION EACH SIDE OF JOINT.

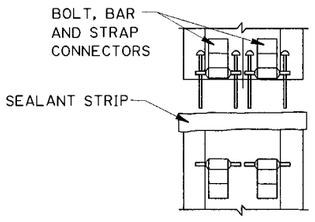

CONNECTION DETAIL
DOUBLE HARNESS

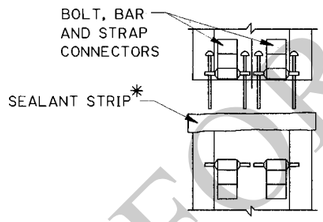

CONNECTION DETAIL
DOUBLE HARNESS

* BAND LAP SEALANT TO BE FLEXIBLE PLASTIC GASKET MATERIAL. REQUIRED THICKNESS IN TABLE. REQUIRED WIDTH IS BAND WIDTH PLUS 2".

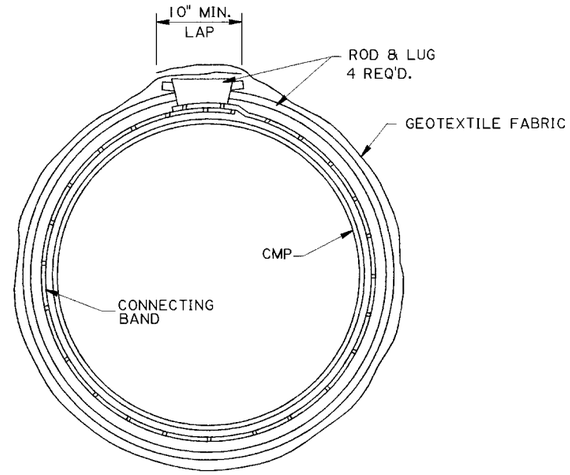

CONNECTING BAND WITH ROD & LUG
(FLEXIBLE PLASTIC GASKET SYSTEM)

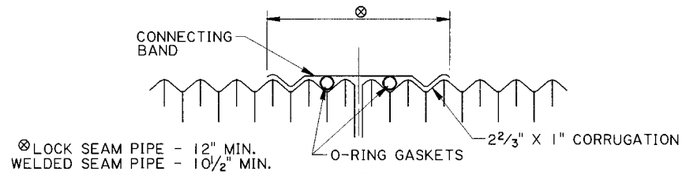

SECTION

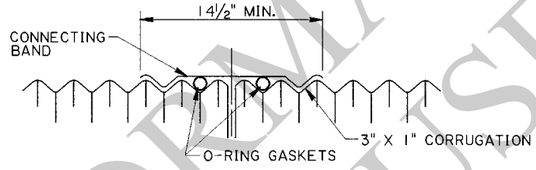

SECTION

ALTERNATE CONNECTING BANDS
O-RING SYSTEM

GEOTEXTILE FABRIC CLOTH REQUIRED - SAME AS SHOWN ABOVE.

O-RING AND FLEXIBLE GASKET THICKNESS			
PIPE SIZE	CORRUGATION DEPTH	O-RING THICKNESS	FLEXIBLE GASKET THICKNESS
36" & UNDER	½"	13/16"	1"
LARGER THAN 36"	½"	⅞"	1"
ALL SIZES	1"	1⅜"	1½"

GENERAL NOTES:

1) O-RING GASKETS WILL BE REQUIRED WHENEVER O-RING SYSTEM CONNECTING BANDS ARE USED. O-RING GASKETS SHALL BE IDENTIFIED BY SIZE, DIAMETER, BATCH OR REEL NUMBER AND PLANT.
2) HELICAL ENDS SHALL BE RE-ROLLED AS PER CURRENT LA DOTD STANDARD SPECIFICATIONS.
3) FOR O-RING JOINT SYSTEMS, BOLTS SHALL BE TORQUED TO A MINIMUM OF 40 FT.LBS.
4) FOR FLEXIBLE PLASTIC GASKET SYSTEM ROUND PIPE, A MINIMUM OF 4 GALVANIZED ½" DIAMETER STEEL RODS AND LUGS SHALL BE PLACED OVER THE CONNECTING BAND. RODS MAY BE 2 PIECE FOR PIPE LARGER THAN 48".
5) GEOTEXTILE FABRIC SHALL CONFORM TO CURRENT LA DOTD STANDARD SPECIFICATIONS.
6) ARCH PIPE SHALL USE THE FLEXIBLE PLASTIC GASKET SYSTEM WITH APPROVED ANGLES OR STRAPS.
7) ALL GASKET MATERIAL SHALL BE APPROVED PRODUCTS ON CURRENT LA DOTD QUALIFIED PRODUCTS LIST.
8) PIPE JOINTS TO BE IN ACCORDANCE WITH CURRENT LA DOTD STANDARD SPECIFICATIONS.

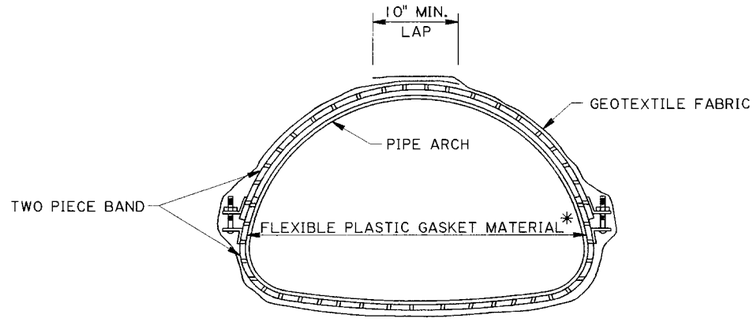

METHOD OF SEALING LONGITUDINAL JOINTS AT TWO PIECE CONNECTING BAND
(FLEXIBLE PLASTIC GASKET SYSTEM)

FOR INFORMATIONAL USE

SHEET NUMBER
PARISH
CONTROL SECTION
STATE PROJECT
DESIGN CDJ
CHECK HJB
DETAIL KAJ
CHECK WMR
REVIEW
SERIES # 2 OF 2
APPROVED BY CHIEF ENGINEER:
DATE: 6/1/2026
NO. DATE BY REVISION OR CHANGE ORDER DESCRIPTION

METAL PIPE WALL THICKNESS AND CONNECTING BANDS FILL HEIGHT FOR METAL PIPE

SAM-1

DOTD LOUISIANA DEPARTMENT OF TRANSPORTATION & DEVELOPMENT

STANDARD PLAN

CHECK PRINTS
10/11/2012 14:09
IP_PWP:dms10583\SC-01.dgn

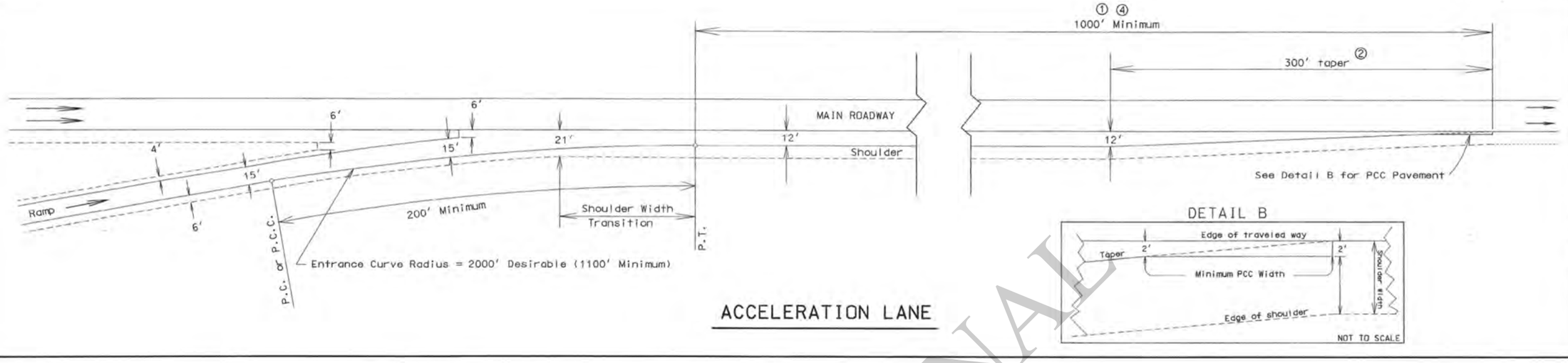

ACCELERATION LANE

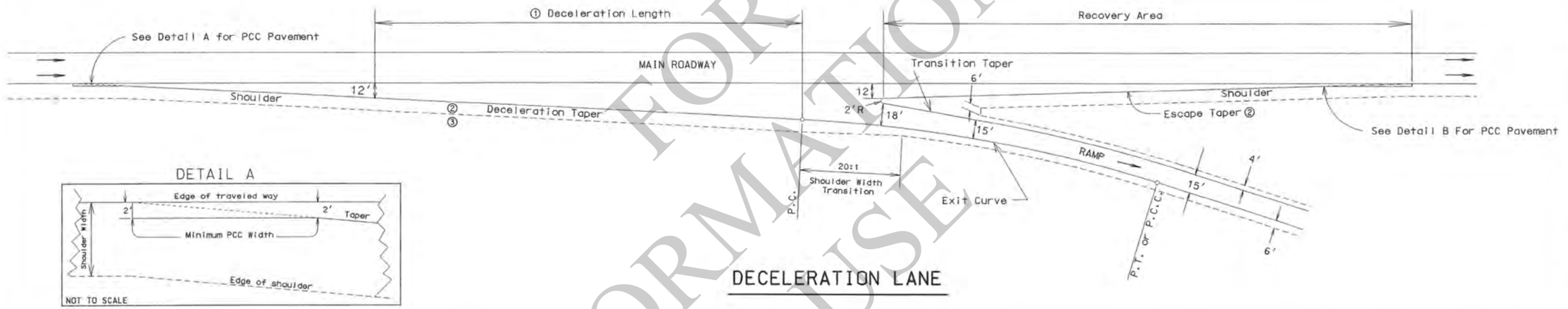

DECELERATION LANE

SPECIFIC NOTES:

① Length of speed change lanes and recovery area to be increased if grades are equal to or exceed 3%. See Exhibit 10-71 from the 2004 AASHTO book entitled "A Policy On Geometric Design Of Highways And Streets".

② On curved mainline roadways with flat curvature, use a horizontal curve to approximate the taper rate. See Exhibit 10-74 from the 2004 AASHTO entitled "A Policy on Geometric Design of Highways and Streets".

③ Horizontal curves are used instead of deceleration tapers when a lane is dropped. Lane drop escape tapers must be 50:1 to 70:1.

④ 1200' minimum if the ramp and freeway will frequently carry traffic volumes approximately equal to the design capacity of the merging area.

GENERAL NOTES:

1 - Minimum ramp length for diagonal ramps is 1000' measured from physical gore to crossroad and 1200' minimum for ramps near capacity.

2 - A minimum 200' platform along the ramp is required so the ramp vertical alignment approximates the mainline alignment. The platform is measured from the physical nose.

3 - Refer to Exhibit 3-27 from the 2004 AASHTO book entitled "A Policy on Geometric Design of Highways and Streets" for ramp superelevation rates.

4 - The mainline design speed should not be less than the anticipated operating speed.

5 - Where decision sight distance cannot be provided at exits, contact the Design Development Engineer for guidance.

6 - The minimum entrance/exit curve radii must be increased if the mainline cross-slope is less than 2.5%. The maximum cross slope break from mainline to ramp curve must not exceed 5%.

Minimum Conditions Table

Condition	Design Speeds (mph) Mainline	Ramp Gore	Ramp Proper Loop	Ramp Proper Diagonal	Deceleration Length (ft)	Exit Curve Radius (ft)	Escape Taper Rate	Transition Taper Rate	Deceleration Taper Rate
A	70	50	25	50 min	340	1050	35:1	25:1	20:1
B	60	45 *	25	45 min	300	850	30:1	22.5:1	17:1
C	50	35	25	35 min	285	500	25:1	17.5:1	14:1

* Rounded upward

FOR INFORMATIONAL USE

SHEET NUMBER
PARSN | FEDERAL PROJECT | STATE PROJECT

TYPICAL SPEED CHANGE LANES FOR INTERSTATE HIGHWAYS
STANDARD PLAN SC-01

Design Development

DESIGNED GNL | DETAILED GNL | DATE Sept 2005
CHECKED NKJ | CHECKED NKJ | SHEET 1 OF 1

NO./ISSUE DESCRIPTION | BY | APPROVED | DATE: 11-21-05

APPROVED BY: CHIEF ENGINEER | DATE

8/13/2026 11:2

CAST-IN-PLACE ALTERNATE

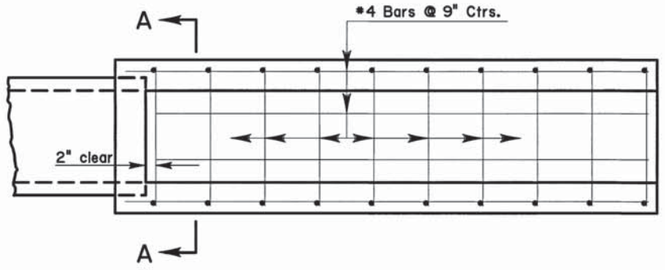

PLAN

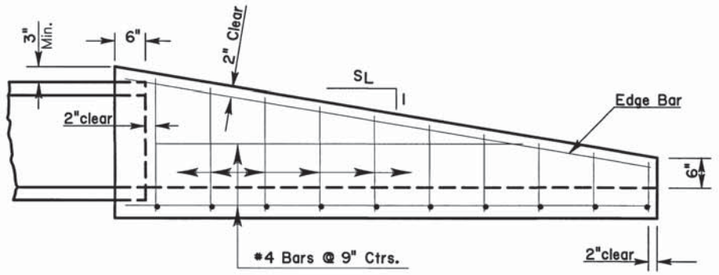

PROFILE

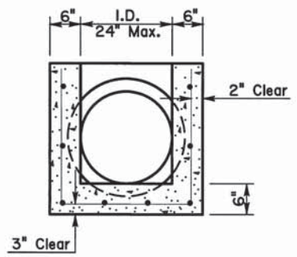

SECTION A-A

PRECAST ALTERNATE

Notes: 1. RCP bell ends which exceed the normal pipe outside diameter (O.D.) shall be removed.
2. Pipe connections shall be sealed with flexible joint sealant.
3. Exposed corners may be chamfered ¾".

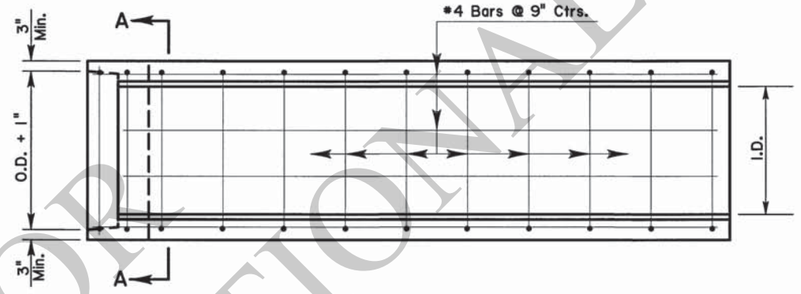

PLAN

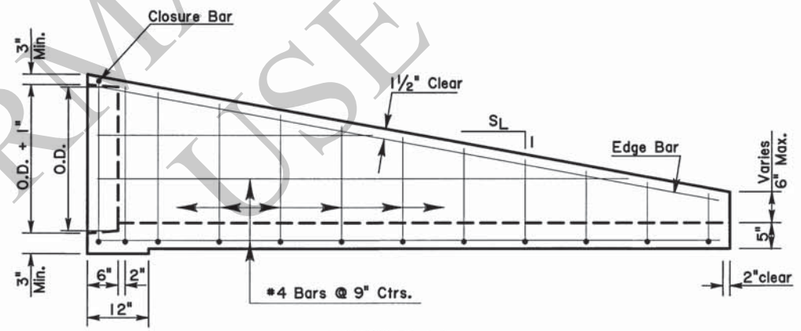

PROFILE

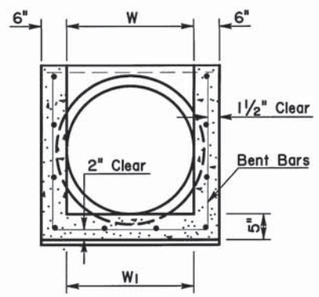

SECTION A-A

Max. difference, W-W1 = 1"

General Notes: (Cast-in-Place & Precast Alternate)

1) While a RCP culvert is detailed, this Safety End shall also be used with RCPA, CMP, CMPA, and RCB culverts. Multiple culverts require multiple Safety Ends.
2) Slope of Safety End walls (SL:1) shall match the required sideslope. If no sideslope is given, a slope of 6:1 shall be required.
3) The Safety End shall be cast-in-place or precast concrete units and shall be in accordance with Section 702 of the LA DOTD Standard Specifications.
4) Concrete to be Class A1 and reinforcing steel to be #4 Grade 60.

FOR INFORMATIONAL USE

SHEET NUMBER

PARISH	CONTROL SECTION	STATE PROJECT

DESIGN PAA CHECK
DETAIL KAJ CHECK PAA
REVIEW SERIES # 1 OF 1

APPROVED BY CHIEF ENGINEER: DATE: 08/19/2026

NO.	DATE	REVISION OR CHANGE ORDER DESCRIPTION	BY

STATE OF LOUISIANA DEPARTMENT OF TRANSPORTATION AND DEVELOPMENT

SIDE DRAIN SAFETY END - TYPE 1
Maximum Pipe Sizes: 24" RCP
24" CMP
18" Eq. RCPA
18" Eq. CMPA

SETSD1

DOTD LOUISIANA DEPARTMENT OF TRANSPORTATION & DEVELOPMENT

STANDARD PLAN

C:\Users\00267398\Desktop\New Borders\SETSD1\SETSD1.dgn

CAST-IN-PLACE ALTERNATE

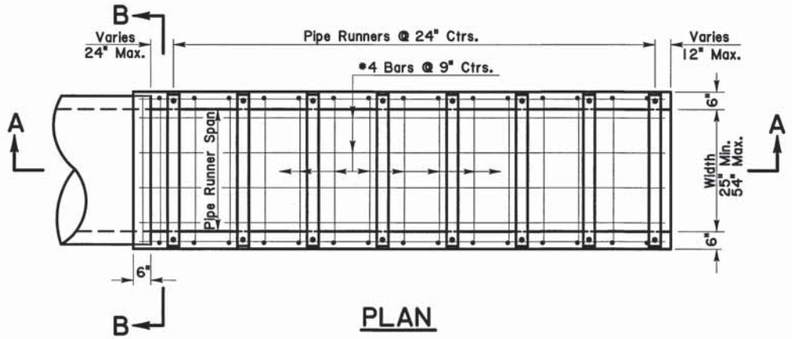

PLAN

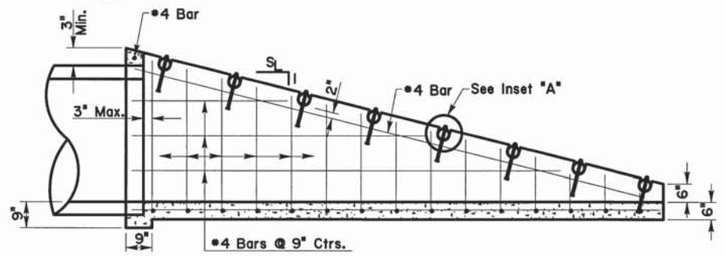

SECTION A-A

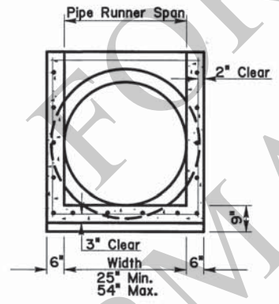

SECTION B-B

PRECAST ALTERNATE

Notes:
1. Concrete to be class A1 & reinforcing steel to be Grade 60.
2. RCP bell ends which exceed the normal pipe outside diameter (O.D.) shall be removed.
3. Pipe connections shall be sealed with flexible gasket material.
4. Exposed corners may be chamfered ¾".

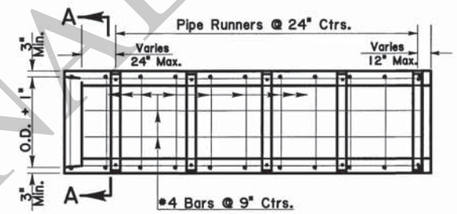

PLAN

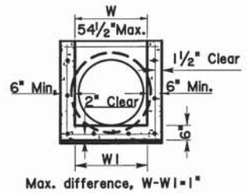

Max. difference, W-W1=1"

SECTION A-A

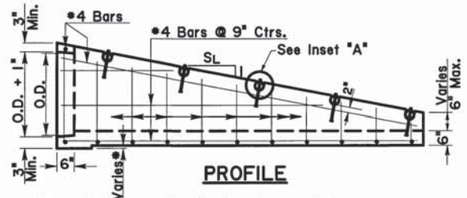

PROFILE

*As needed to provide 3" min. clearance between outside diameter of pipe and bottom slab.

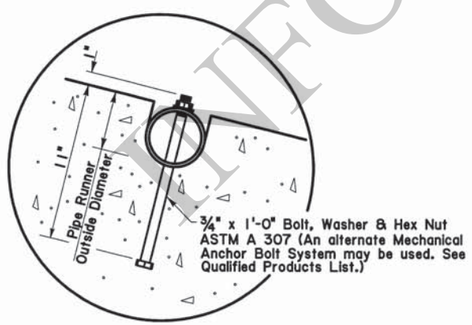

INSET "A"

General Notes: (Cast-in-Place & Precast)

1) While a RCP culvert is detailed, this Safety End shall also be used with RCPA, CMP, CMPA, and RCB culverts. Multiple culverts will require multiple ends.

2) Slope of Safety End walls (SL:1) shall match the required sideslope. If no sideslope is given, a slope of 6:1 shall be required.

3) Pipe Runners shall be galvanized steel pipe conforming to ASTM A53, Type E or S, Grade B, 35ksi; or ASTM A501, 36ksi. Required Pipe Runner diameters and strengths for various maximum spans are:

Nominal Diameter	Strength/ Schedule	Maximum* Span	Outside Diameter	Wall Thickness	Weight Per Foot
3"	Std/40	11'-2"	3.5"	0.216"	7.58 lbs

*Pipe Runners are designed for a traversing load of 1800 pounds at yield.

4) Side Drain Safety Ends may be provided as cast-in-place or precast, and shall be in accordance with Section 702 of the LA DOTD Standard Specifications.

FOR INFORMATIONAL USE

SHEET NUMBER

	PARISH	CONTROL SECTION	STATE PROJECT
DESIGN PAA / CHECK JCM		DETAIL KAJ / CHECK PAA	REVIEW / SERIES # 1 OF 1

APPROVED BY CHIEF ENGINEER: DATE: 08/19/2026

REVISION OR CHANGE ORDER DESCRIPTION | BY | NO. | DATE

STATE OF LOUISIANA — DEPARTMENT OF TRANSPORTATION AND DEVELOPMENT

SIDE DRAIN SAFETY END - TYPE 2

Pipe Sizes: 30" - 48" RCP
30" - 54" CMP
24" Eq. - 36" Eq. RCPA
24" Eq. - 42" Eq. CMPA

SETSD2

DOTD — LOUISIANA DEPARTMENT OF TRANSPORTATION & DEVELOPMENT

STANDARD PLAN

7/22/2026 13:2

C:\Users\00267398\Desktop\New Borders\SETSD2\SETSD2.dgn

8/17/2026 10:4
C:\Users\00267398\Desktop\New Borders\SETSD3\SETSD3.dgn

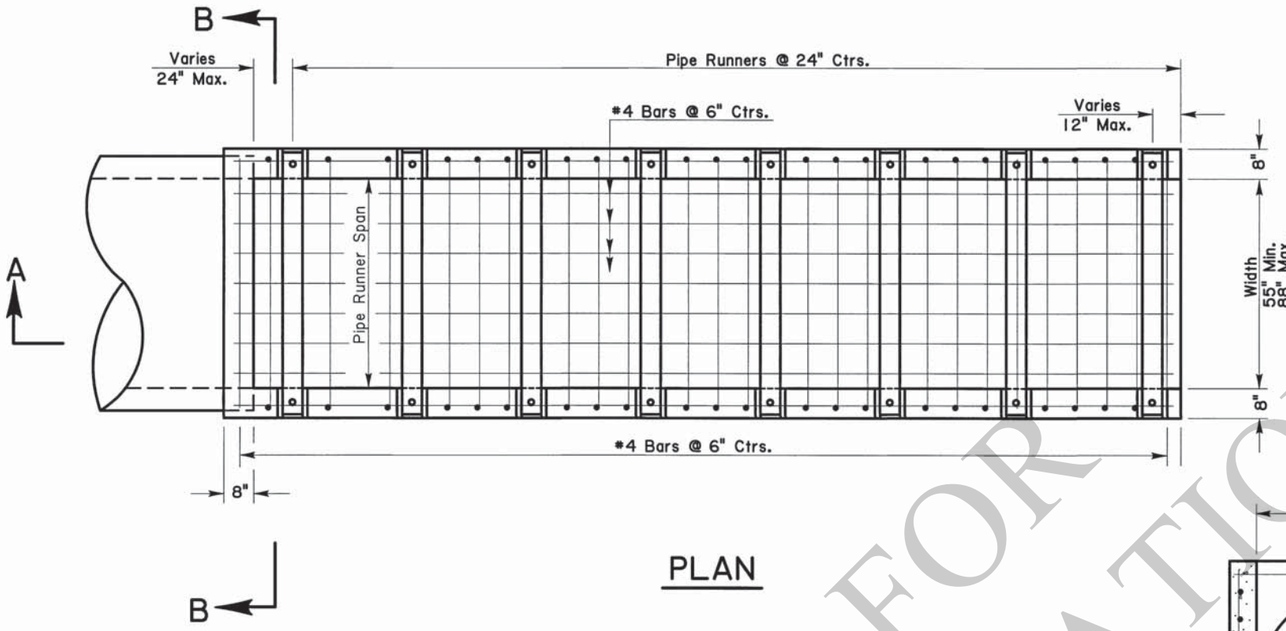

PLAN

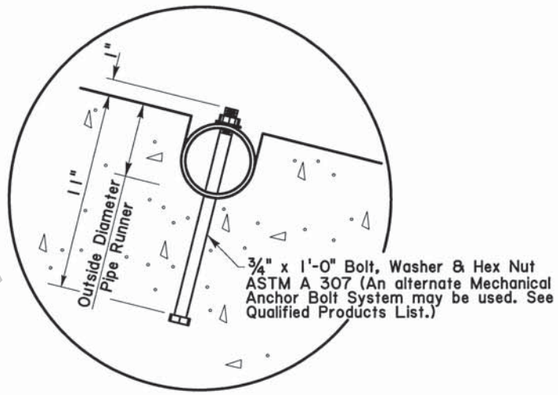

INSET "A"

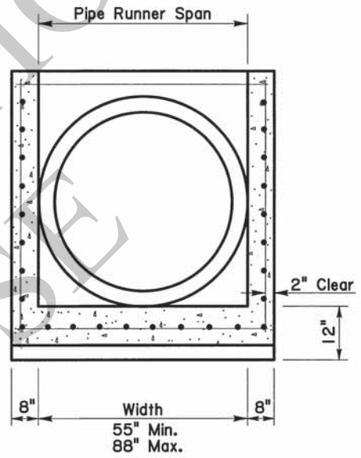

SECTION B-B

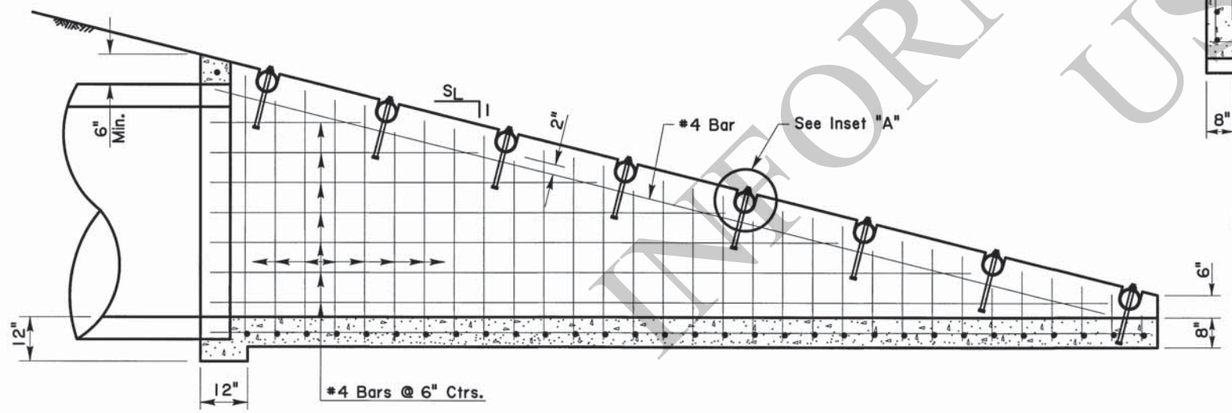

SECTION A-A

General Notes:

1) While a RCP culvert is detailed, this Safety End shall also be used with RCPA, CMP, CMPA, and RCB culverts. Multiple culverts will require multiple Safety Ends.
2) Slope of Safety End walls (S_L:1) shall match the required sideslope. If no sideslope is given, a slope of 6:1 shall be required.
3) Pipe Runners shall be galvanized steel pipe conforming to ASTM A53, Type E or S, Grade B, 35ksi; or ASTM A501, 36ksi. Required Pipe Runner diameters and strengths for various maximum spans are:
4) Concrete to be class A1 & reinforcing steel to be Grade 60.

Nominal Diameter	Strength/ Schedule	Maximum* Span	Outside Diameter	Wall Thickness	Weight Per Foot
3"	Std/40	11'-2"	3.5"	0.216"	7.58 lbs

*Pipe Runners are designed for a traversing load of 1800 pounds at yield.

FOR INFORMATIONAL USE

SHEET NUMBER
PARISH
CONTROL SECTION
STATE PROJECT
DESIGN PAA
CHECK
DETAIL KAJ
CHECK PAA
REVIEW
SERIES # 1 OF 1
APPROVED BY CHIEF ENGINEER:
DATE: 08/19/2026
BY:
NO. DATE REVISION OR CHANGE ORDER DESCRIPTION

STATE OF LOUISIANA
DEPARTMENT OF TRANSPORTATION AND DEVELOPMENT

SIDE DRAIN SAFETY END - TYPE 3
55" MIN. TO 88" MAX. WIDTH

SETSD3

DOTD
LOUISIANA DEPARTMENT OF TRANSPORTATION & DEVELOPMENT

STANDARD PLAN

U:\Tasks\Spec updating\Finals\8.25.2025\New Construction Shoulder Underdrain New Construction (Full Size).dgn 8/26/2025 13:1

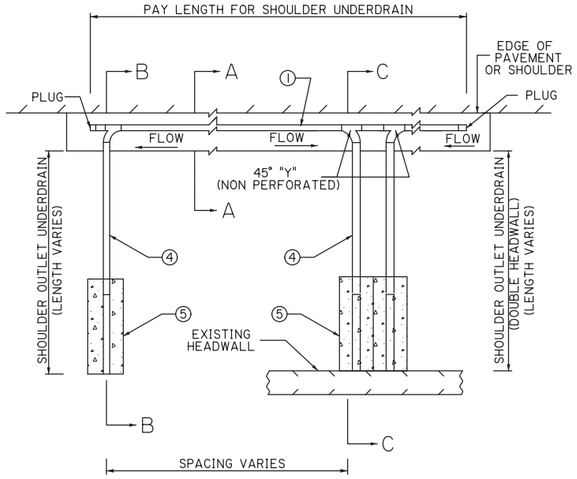

PLAN VIEW

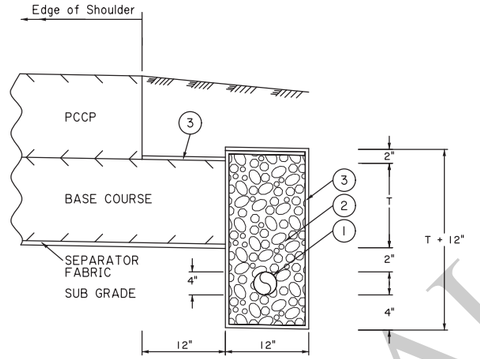

SECTION A-A

LEGEND

① REQ'D 4" PLASTIC UNDERDRAIN PIPE (PERFORATED)
② REQ'D AGGREGATE
③ REQ'D PLASTIC FILTER CLOTH
④ REQ'D 4" PLASTIC UNDERDRAIN PIPE (NON PERFORATED)
⑤ REQ'D CONCRETE SLOTTED HEADWALL

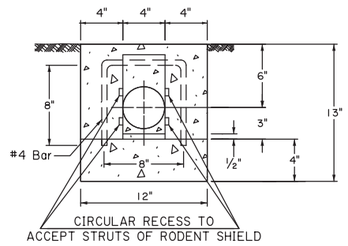

CONCRETE SLOTTED HEADWALL (FRONT VIEW)

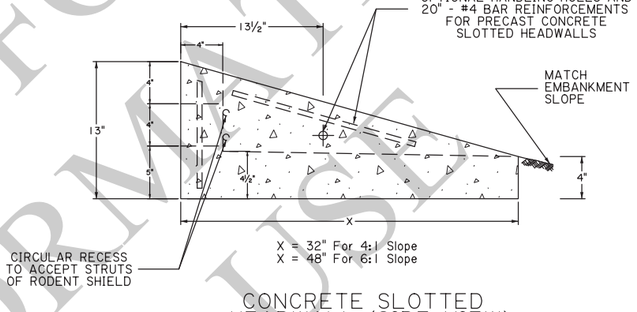

CONCRETE SLOTTED HEADWALL (SIDE VIEW)

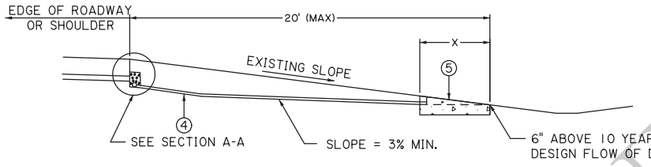

SECTION B-B

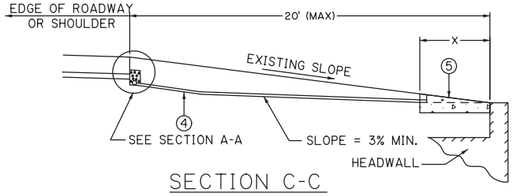

SECTION C-C

(1) THE SHOULDER UNDERDRAIN SYSTEMS PAY ITEM SHALL INCLUDE ALL REQUIRED TRENCHING, PLASTIC UNDERDRAIN PIPE (PERFORATED), "Y" 'S, FITTINGS, PLUGS, PLASTIC FILTER CLOTH, AGGREGATE, AND BACKFILL.

(2) THE SHOULDER OUTLET UNDERDRAINS PAY ITEM (SINGLE OR DOUBLE HEADWALL) SHALL INCLUDE ALL REQUIRED TRENCHING, PLASTIC UNDERDRAIN PIPE (NON PERFORATED), CONCRETE SLOTTED HEADWALLS, RODENT SHIELD, EXCAVATION, AND BACKFILLING WITH SUITABLE MATERIAL REMOVED FROM TRENCHES.

(3) TRENCH DIMENSIONS SHALL BE AS REQUIRED TO PLACE UNDERDRAIN OR AS REQUIRED BY THE PROJECT ENGINEER.

(4) FOR MORE INFORMATION ON PAVEMENT STRUCTURE REFER TO THE TYPICAL SECTIONS.

(5) THE LAYOUT SHOWN ON THIS SHEET IS GENERAL. ACTUAL LAYOUTS SHALL BE AS DIRECTED BY THE PROJECT ENGINEER.

(6) THERE SHALL BE NO EXCAVATION LEFT OPEN AT THE END OF EACH DAY.

(7) THE CONCRETE SLOTTED HEADWALL CAN BE EITHER PRECAST OR CAST IN PLACE. THE UPPERMOST POINT OF THE HEADWALL SHALL BE FLUSH WITH THE ROADWAY SLOPE. THE EARTHEN SIDE SLOPES ADJACENT TO THE HEADWALL SHALL THEN BE SHAPED TO CONFORM TO THE SIDES AND TOE OF THE HEAD WALL. IF A PRECAST HEADWALL IS USED, THE UNDERDRAIN PIPE WILL BE GROUTED AND SEALED TO THE HEADWALL WITH CEMENT MORTAR.

(8) FOR PLASTIC UNDERDRAIN PIPE SEE SECTION 1006 AND AML 73.

(9) ALL SHOULDER UNDERDRAIN OUTLET LOCATIONS SHALL BE MARKED BY PLACING A NONREFLECTORIZED RAISED PAVEMENT MARKER ON THE SHOULDER. COST TO BE INCLUDED IN THE SHOULDER OUTLET UNDERDRAINS PAY ITEM.

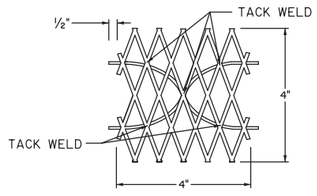

EXPANDED METAL SHIELD WITH TWO 6 GAGE STEEL WIRE STRUTS. STRUTS SHALL BE CUT FOR SNUG FIT INTO THE RECESSES IN THE CONCRETE SLOTTED HEADWALL. STRUTS SHALL NOT BE CAST IN TO THE CONCRETE

RODENT SHIELD DETAIL

FOR INFORMATIONAL USE

SHEET NUMBER

PARISH | CONTROL SECTION | STATE PROJECT

DESIGN B. MAY | CHECK R. ISEMANN | DETAIL B. MAY | CHECK R. ISEMANN | REVIEW | SERIES # 1 OF 1

APPROVED BY CHIEF ENGINEER: DATE: Oct. 1, 2025

NO. | DATE | REVISION OR CHANGE ORDER DESCRIPTION | BY

STATE OF LOUISIANA

SHOULDER UNDERDRAIN
NEW CONSTRUCTION

SU-01

DOTD
LOUISIANA DEPARTMENT OF TRANSPORTATION & DEVELOPMENT

STANDARD PLAN

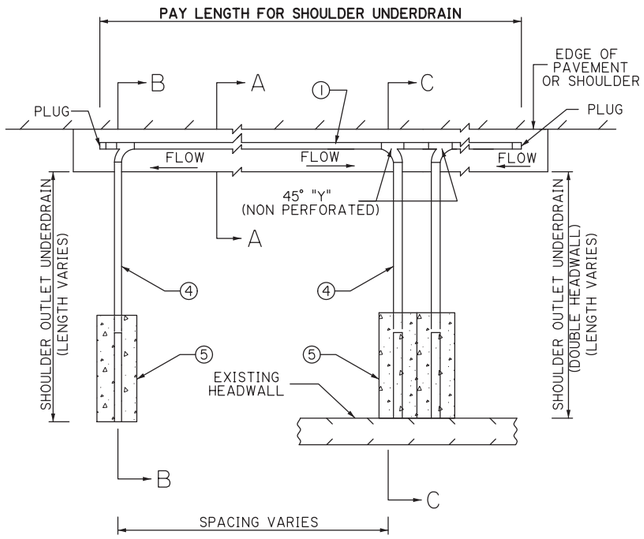

PLAN VIEW

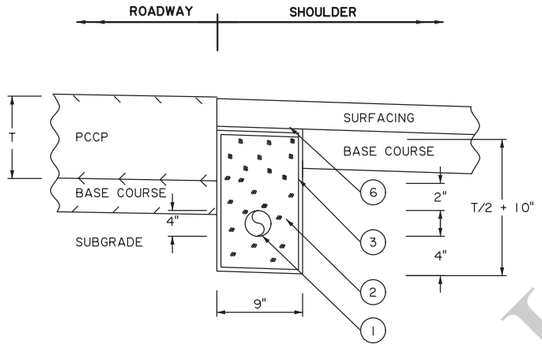

SECTION A-A

LEGEND

1. REQ'D 4" PLASTIC UNDERDRAIN PIPE (PERFORATED)
2. REQ'D AGGREGATE
3. REQ'D PLASTIC FILTER CLOTH
4. REQ'D 4" PLASTIC UNDERDRAIN PIPE (NON PERFORATED)
5. REQ'D CONCRETE SLOTTED HEADWALL
6. REQ'D SHOULDER SURFACING

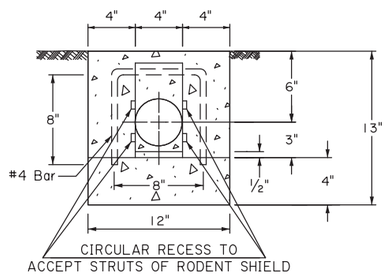

CONCRETE SLOTTED HEADWALL (FRONT VIEW)

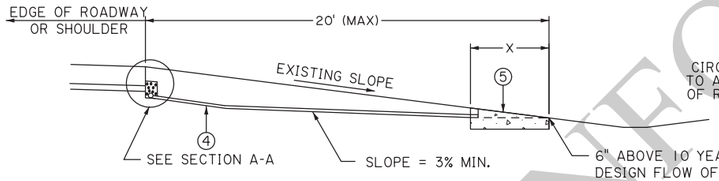

SECTION B-B

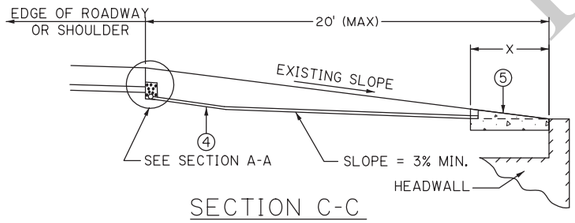

SECTION C-C

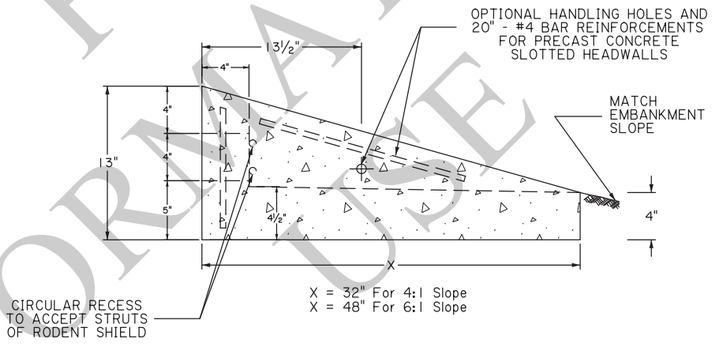

CONCRETE SLOTTED HEADWALL (SIDE VIEW)

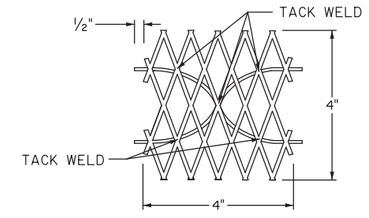

EXPANDED METAL SHIELD WITH TWO 6 GAGE STEEL WIRE STRUTS. STRUTS SHALL BE CUT FOR SNUG FIT INTO THE RECESSES IN THE CONCRETE SLOTTED HEADWALL. STRUTS SHALL NOT BE CAST IN TO THE CONCRETE

RODENT SHIELD DETAIL

(1) THE SHOULDER UNDERDRAIN SYSTEMS PAY ITEM SHALL INCLUDE ALL REQUIRED TRENCHING, PLASTIC UNDERDRAIN PIPE (PERFORATED), "Y" 'S, FITTINGS, PLUGS, PLASTIC FILTER CLOTH, AGGREGATE, AND BACKFILL.

(2) THE SHOULDER OUTLET UNDERDRAINS PAY ITEM (SINGLE OR DOUBLE HEADWALL) SHALL INCLUDE ALL REQUIRED TRENCHING, PLASTIC UNDERDRAIN PIPE (NON PERFORATED), CONCRETE SLOTTED HEADWALLS, RODENT SHIELD, EXCAVATION, AND BACKFILLING WITH SUITABLE MATERIAL REMOVED FROM TRENCHES.

(3) TRENCH DIMENSIONS SHALL BE AS REQUIRED TO PLACE UNDERDRAIN OR AS REQUIRED BY THE PROJECT ENGINEER.

(4) FOR MORE INFORMATION ON PAVEMENT STRUCTURE REFER TO THE TYPICAL SECTIONS.

(5) THE LAYOUT SHOWN ON THIS SHEET IS GENERAL. ACTUAL LAYOUTS SHALL BE AS DIRECTED BY THE PROJECT ENGINEER.

(6) THERE SHALL BE NO EXCAVATION LEFT OPEN AT THE END OF EACH DAY.

(7) THE CONCRETE SLOTTED HEADWALL CAN BE EITHER PRECAST OR CAST IN PLACE. THE UPPERMOST POINT OF THE HEADWALL SHALL BE FLUSH WITH THE ROADWAY SLOPE. THE EARTHEN SIDE SLOPES ADJACENT TO THE HEADWALL SHALL THEN BE SHAPED TO CONFORM TO THE SIDES AND TOE OF THE HEAD WALL. IF A PRECAST HEADWALL IS USED, THE UNDERDRAIN PIPE WILL BE GROUTED AND SEALED TO THE HEADWALL WITH CEMENT MORTAR.

(8) FOR PLASTIC UNDERDRAIN PIPE SEE SECTION 1006 AND AML 73.

(9) ALL SHOULDER UNDERDRAIN OUTLET LOCATIONS SHALL BE MARKED BY PLACING A NONREFLECTORIZED RAISED PAVEMENT MARKER ON THE SHOULDER. COST TO BE INCLUDED IN THE SHOULDER OUTLET UNDERDRAINS PAY ITEM.

FOR INFORMATIONAL USE

SHEET NUMBER

PARISH | CONTROL SECTION | STATE PROJECT

DESIGN B. MAY | CHECK R. ISEMANN | DETAIL B. MAY | CHECK R. ISEMANN | REVIEW | SERIES # 1 OF 1

APPROVED BY CHIEF ENGINEER: DATE: Oct. 1, 2025

NO.	DATE	REVISION OR CHANGE ORDER DESCRIPTION	BY

STATE OF LOUISIANA

SHOULDER UNDERDRAINS RETROFIT

SU-02

DOTD LOUISIANA DEPARTMENT OF TRANSPORTATION & DEVELOPMENT

STANDARD PLAN

8/26/2025 13:1:

U:\Tasks\Spec updating\Finals\8.25.2025\Retrofit Shoulder Underdrain Retrofit (Full Size).dgn

P.C.C.P. SHOULDER WEDGE

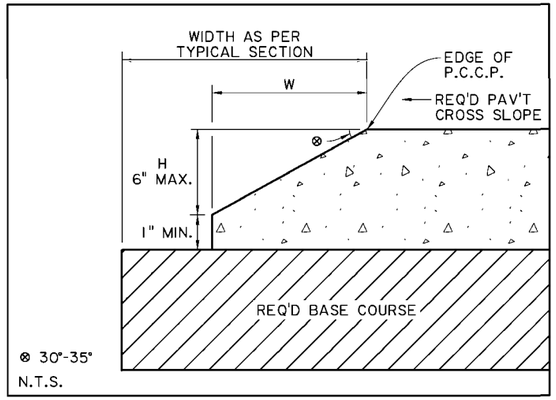

P.C.C. SHOULDER WEDGE FOR NEW CONSTRUCTION

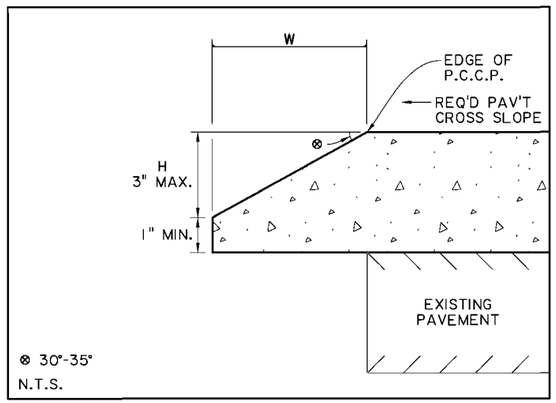

P.C.C. SHOULDER WEDGE FOR WHITETOPPING

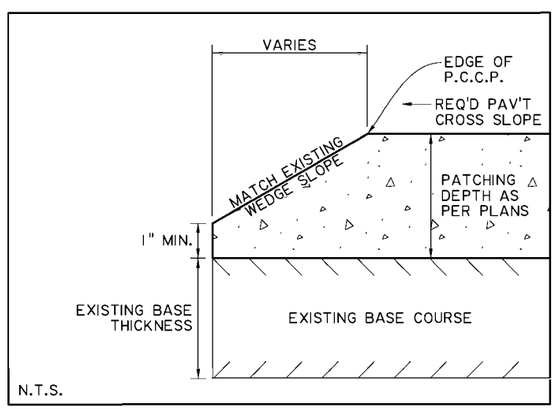

P.C.C. SHOULDER WEDGE FOR PAVEMENT PATCHING WITH EXISTING WEDGE

NOTES:

1. SHOULDER WEDGES SHALL BE REQUIRED AT THE OUTSIDE EDGES OF THE PAVED ROADWAY (EDGE OF TRAVEL LANE OR EDGE OF PAVED SHOULDER), UNLESS THE TOTAL REQUIRED ASPHALT CONCRETE THICKNESS IS LESS THAN 2" AND FOR PAVEMENT PATCHING PROJECTS WHERE THE EXISTING PAVEMENT DOES NOT HAVE SHOULDER WEDGES.
2. FOR ASPHALT CONCRETE PAVEMENTS, SHOULDER WEDGES SHALL BE UTILIZED ON SINGLE LIFTS IF THE LAYER THICKNESS IS GREATER THAN OR EQUAL TO 2" AND, AT A MINIMUM, ON EACH OF THE TOP 2 LIFTS OF A MULTI-LIFT PAVEMENT.
3. EQUIP THE PAVER WITH A MECHANICAL DEVICE THAT WILL PRODUCE A WEDGE WITH A UNIFORM TEXTURE, SHAPE, AND DENSITY, WHILE AUTOMATICALLY ADJUSTING TO VARYING HEIGHTS ENCOUNTERED ALONG THE PAVEMENT EDGE.
4. THE CONTRACTOR SHALL BLADE AND SHAPE EXISTING GROUND OR SHOULDER MATERIAL TO FORM A UNIFORM SURFACE UNDER THE ASPHALT SHOULDER WEDGE PRIOR TO PLACEMENT OF PAVEMENT.
5. FOR ASPHALT CONCRETE PAVEMENTS, THE MAXIMUM SHOULDER WEDGE HEIGHT ("H") SHALL EQUAL 6". IF THE TOTAL ASPHALT THICKNESS IS GREATER THAN 6", THE CONTRACTOR SHALL STAGE CONSTRUCTION BY PULLING UP THE SHOULDERS OR FORE SLOPE MATERIAL IN THE LOWER LIFTS, THEN UTILIZING THE WEDGE IN EACH OF THE FINAL 2 LIFTS.
6. REQUIRED BASE WIDTHS ARE AS SHOWN ON TYPICAL SECTIONS. IT IS NOT REQUIRED FOR THE BASE COURSE WIDTH TO INCLUDE THE WIDTH OF THE ASPHALT WEDGE. THE ASPHALT WEDGE MAY BE SUPPORTED BY THE EXISTING GROUND, EMBANKMENT, OR SHOULDER MATERIAL. HOWEVER, THE DESIGNER SHOULD MAKE EVERY EFFORT TO SUPPORT THE SHOULDER WEDGE WITH NEW BASE COURSE MATERIAL UNLESS PREVENTED BY PROJECT SCOPE, PHYSICAL RESTRAINTS, OR DEEMED IMPRACTICAL. FOR CONCRETE SHOULDER WEDGES, THE REQUIRED BASE WIDTH SHOULD INCLUDE THE WIDTH OF THE SHOULDER WEDGE AND THE DESIRED ADDITIONAL WIDTH BEYOND THE SURFACING, EXCEPT FOR WHITETOPPING.
7. SEE TYPICAL SECTION SHEETS FOR PAVEMENT DETAILS.
8. THE ANGLE SHOWN FOR AN ASPHALT CONCRETE SHOULDER WEDGE IS MEASURED AFTER COMPACTION.
9. THE SHOULDER WEDGE SHALL NOT BE CONSIDERED PART OF THE REQUIRED PAVEMENT WIDTH.
10. ANGLE OF SHOULDER WEDGE IS MEASURED FROM THE FACE OF THE WEDGE TO A LINE REPRESENTING THE THEORETICAL PROJECTION OF THE PAVEMENT CROSS SLOPE.
11. SHOULDER WEDGES SHALL NOT BE CONSTRUCTED AT INTERSECTIONS, PAVED DRIVEWAYS, OR BEHIND GUARDRAILS UNLESS OTHERWISE NOTED IN THE PLANS OR DIRECTED BY THE PROJECT ENGINEER. IF SHOULDER WEDGES ARE CONSTRUCTED AT THESE LOCATIONS DURING PAVING OPERATIONS, THEY SHALL BE REMOVED BY SAWCUTTING AT NO DIRECT PAY. NO QUANTITY DEDUCTIONS WILL BE MADE IN THE PLANS FOR SUCH GAPS.
12. SHOULDER WEDGES SHALL BE REQUIRED AT THE OUTSIDE EDGES OF WHITETOPPING UNLESS THE REQUIRED THICKNESS IS 2" OR AN ASPHALT SHOULDER IS PROPOSED IN ADDITION TO WHITETOPPING. THE PROPOSED ASPHALT SHOULDER IS REQUIRED TO HAVE WEDGES UNLESS THE TOTAL REQUIRED ASPHALT CONCRETE THICKNESS IS LESS THAN 2".

P.C.C.P. SHOULDER WEDGE QUANTITIES

HEIGHT "H" INCHES	30° WEDGES		35° WEDGES	
	WIDTH "W" INCHES	SQYD PER MILE	WIDTH "W" INCHES	SQYD PER MILE
4.0	6.9	674.7	5.7	557.3
5.0	8.7	850.7	7.1	694.2
6.0	10.4	1016.9	8.6	840.9

QUANTITIES SHOWN IN PLANS ARE BASED ON A 35° WEDGE
QUANTITIES SHOWN ARE FOR 2 WEDGES (ONE AT EACH SIDE OF ROADWAY)

WHITETOPPING WEDGE QUANTITIES

HEIGHT "H" INCHES	30° WEDGES		35° WEDGES	
	WIDTH "W" INCHES	SQYD PER MILE	WIDTH "W" INCHES	SQYD PER MILE
2.0	3.5	342.2	2.9	283.6
3.0	5.2	508.4	4.3	420.4

QUANTITIES SHOWN IN PLANS ARE BASED ON A 35° WEDGE
QUANTITIES SHOWN ARE FOR 2 WEDGES (ONE AT EACH SIDE OF ROADWAY)

ASPHALT CONCRETE SHOULDER WEDGE

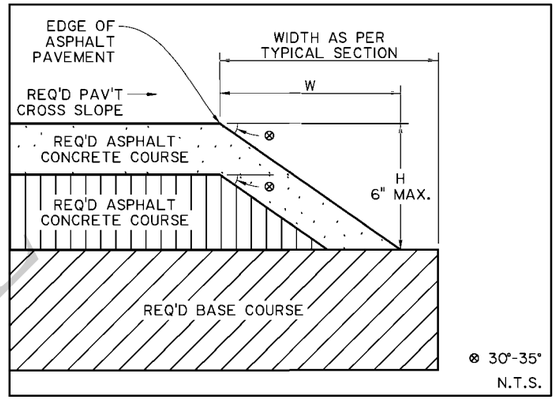

ASPHALT CONCRETE SHOULDER WEDGE
FOR NEW CONSTRUCTION OR BASE REHABILITATION

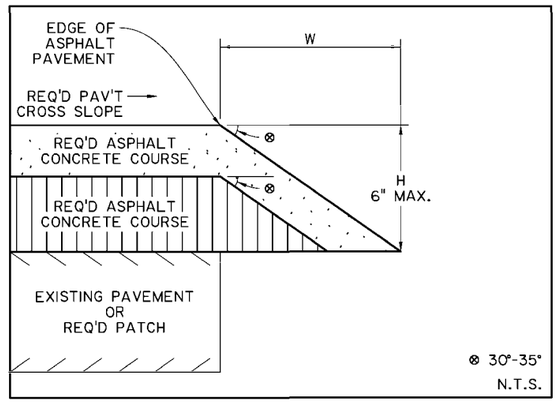

ASPHALT CONCRETE SHOULDER WEDGE FOR OVERLAY OR PATCHING

ASPHALT CONCRETE SHOULDER WEDGE QUANTITIES

HEIGHT "H" INCHES	30° WEDGES		35° WEDGES	
	WIDTH "W" INCHES	TONS PER MILE	WIDTH "W" INCHES	TONS PER MILE
2.0	3.5	18.8	2.9	15.6
2.5	4.3	28.9	3.6	24.2
3.0	5.2	41.9	4.3	34.7
3.5	6.1	57.4	5.0	47.1
4.0	6.9	74.2	5.7	61.3
4.5	7.8	94.4	6.4	77.4
5.0	8.7	117.0	7.1	95.5
5.5	9.5	140.5	7.9	116.8
6.0	10.4	167.8	8.6	138.7

QUANTITIES SHOWN IN PLANS ARE BASED ON A 35° WEDGE
QUANTITIES SHOWN IN TABLE ARE BASED ON 110 ~~LB~~ TON/SQYD
QUANTITIES SHOWN ARE FOR 2 WEDGES (ONE AT EACH SIDE OF ROADWAY)

FOR INFORMATIONAL PURPOSE

SHEET NUMBER

PARISH | CONTROL SECTION | STATE PROJECT

DESIGN RAN | CHECK JML | DETAIL RAN | CHECK JML | REVIEW | SERIES # 1 OF 1

APPROVED BY CHIEF ENGINEER: DATE: 6/1/2026

NO. | DATE | REVISION OR CHANGE ORDER DESCRIPTION | BY

STATE OF LOUISIANA

SHOULDER WEDGE

SW-01

DOTD LOUISIANA DEPARTMENT OF TRANSPORTATION & DEVELOPMENT

STANDARD PLAN

10:0
6/17/2026

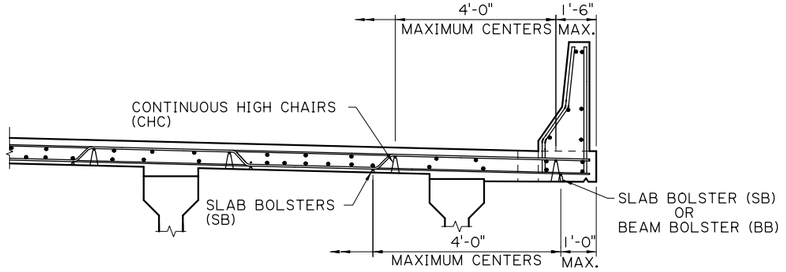

STEEL OR CONCRETE GIRDER SPAN - LAYOUT "A"

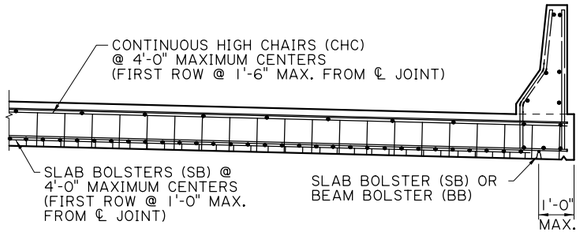

CONCRETE SLAB SPAN - LAYOUT "A"

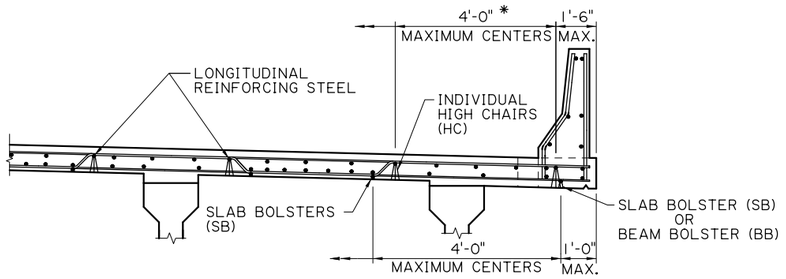

STEEL OR CONCRETE GIRDER SPAN - LAYOUT "B"
(ALTERNATE)

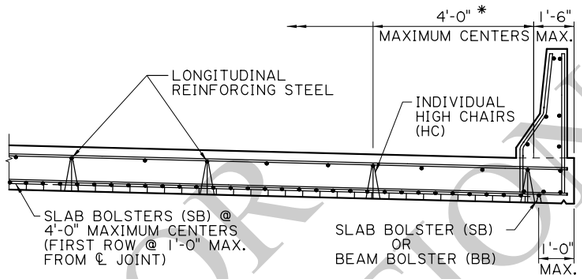

CONCRETE SLAB SPAN - LAYOUT "B"
(ALTERNATE)

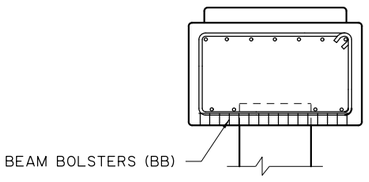

PILE BENT - LAYOUT "A"

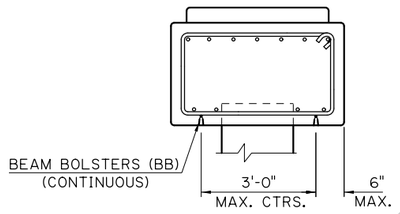

PILE BENT - LAYOUT "B"
(ALTERNATE)

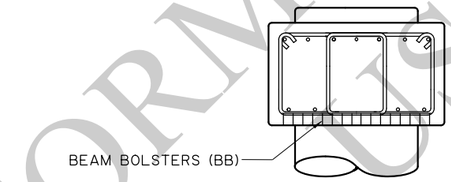

COLUMN BENT

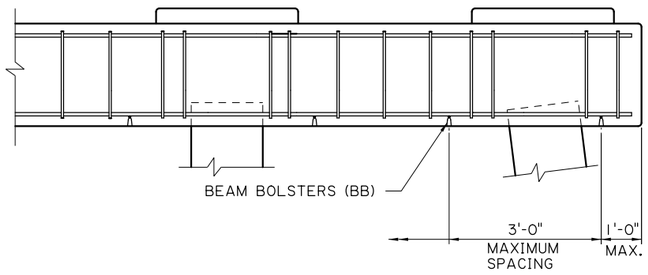

PILE BENT - LAYOUT "A"

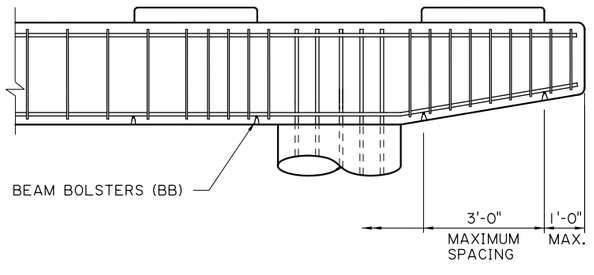

COLUMN BENT

GENERAL NOTES:

STEEL WIRE BAR SUPPORTS AND REINFORCING STEEL BARS SHALL BE IN ACCORDANCE WITH THE LATEST APPROVED LOUISIANA STANDARD SPECIFICATIONS FOR ROADS AND BRIDGES, AS AMENDED BY THE SPECIAL PROVISIONS AND/OR SUPPLEMENTAL SPECIFICATIONS.

HEIGHT OF BAR SUPPORTS ARE TO BE THAT REQUIRED TO SUPPORT THE REINFORCING BARS AT POSITIONS SHOWN IN THE PLANS.
BAR SUPPORTS ARE NOT INTENDED, AND SHALL NOT BE USED, TO SUPPORT RUNWAYS FOR CONCRETE BUGGIES OR SIMILAR LOADS.

WHEN BAR SUPPORTS ARE PLACED IN CONTINUOUS LINES, THEY SHALL BE SO PLACED THAT THE ENDS OF THE SUPPORTING WIRES SHALL BE LAPPED TO LOCK THE LAST LEGS ON ADJOINING PIECES, BUT NO BAR SHALL BE PLACED MORE THAN 2" BEYOND THE LAST LEG AT THE END OF A RUN OF ANY CONTINUOUS SUPPORTS.

WHERE BAR SUPPORTS ARE USED ON EARTH OR AGGREGATE SUB GRADES, SUITABLE PLATES SHALL BE PROVIDED TO PREVENT DISPLACEMENT OF THE SUPPORT FOOT.
ALL BAR SUPPORTS BEARING ON THE FORMS SHALL HAVE A RADIUS BEARING LEGS IN THE FORM OF A HOOK (UPTURNED LEGS) OR SPHERICAL FOOT AT THE LOWER END OF THE LEGS.

THE BOTTOM OF BAR SUPPORTS SHALL BE COATED WITH AN ACCEPTABLE EPOXY OR PLASTIC MATERIAL FOR A MIMIMUM DISTANCE OF 2 INCHES FROM THE POINT OF CONTACT WITH THE FORMS.

METAL TIE WIRES AND BAR SUPPORTS SHALL BE COATED FULLY WITH AN ACCEPTABLE EPOXY, PLASTIC OR NYLON MATERIAL IF USING EPOXY COATED REINFORCING STEEL.

TYPE OF SUPPORT	BAR SUPPORT ILLUSTRATION	MINIMUM WIRE DIAMETER △			REMARKS
		HEIGHT	TOP	LEGS	
SLAB BOLSTER (SB)		ALL	NO. 4 CORRU-GATED	NO. 6	VERTICAL CORRUGATIONS SPACED 1" ON CENTERS
BEAM BOLSTER (BB)		UP TO 2" OVER 2"	NO. 7 NO. 4	NO. 7 NO. 4	
⊡ CONTINUOUS HIGH CHAIR (CHC)		2" TO 5" 5" TO 9" OVER 9"	NO. 2 NO. 2 NO. 2	NO. 4 NO. 2 NO. 0	LAYOUT "A" FOR SPANS
❽ INDIVIDUAL HIGH CHAIR (HC)		2" TO 5" 5" TO 9" OVER 9"	N/A N/A N/A	NO. 4 NO. 2 NO. 0	LAYOUT "B" FOR SPANS (ALTERNATE)

△ AMERICAN STEEL AND WIRE GUAGES.

❽ LEGS SHALL BE 20 DEGREES OR LESS WITH VERTICAL WHEN HEIGHT EXCEEDS 1'-0". REINFORCE LEGS WITH WELDED CROSS WIRES OR ENCIRCLING WIRES.

⊡ LEGS SHALL BE 20 DEGREES OR LESS WITH VERTICAL, ON 8¼" CENTER MAXIMUM, WITHIN 4" OF END CHAIR, AND THE SPREAD BETWEEN LEGS NOT LESS THAN 50% OF NORMAL HEIGHT.

✱ IF LONGITUDINAL REINFORCING BARS ARE NO. 4, SPACE THE INDIVIDUAL HIGH CHAIRS (HC) @ 3'-0" MAXIMUM CENTERS LONGITUDINALLY; FOR NO. 5 BARS OR LARGER, SPACE @ 4'-0" MAXIMUM CENTERS.

FOR INFORMATIONAL USE

SHEET NUMBER

PARISH | CONTROL SECTION | STATE PROJECT

DESIGN P. FOSSIER | DETAIL G. GRASS | REVIEW | SERIES ▪ | I OF I
CHECK P. FOSSIER | CHECK

APPROVED BY CHIEF ENGINEER: DATE: 6/24/2026

NO.	DATE	BY
	11/15/12	PF

Add Note On Support & Tie Coatings
REVISION OR CHANGE ORDER DESCRIPTION

STEEL WIRE BAR SUPPORT
FOR REINFORCING STEEL

SWBS-100

DOTD LOUISIANA DEPARTMENT OF TRANSPORTATION & DEVELOPMENT

STANDARD PLAN

IP_PWP:d1274945\SWBS100.dgn

GENERAL NOTES - OVERHEAD TRAFFIC SIGNS

CONSTRUCTION SPECIFICATIONS: CONSTRUCTION SHALL BE IN ACCORDANCE WITH THE LOUISIANA DEPARTMENT OF TRANSPORTATION AND DEVELOPMENT, STANDARD SPECIFICATIONS FOR ROADS AND BRIDGES. LATEST EDITION EXCEPT AS SUPPLEMENTED OR AMENDED BY THE PLANS, SUPPLEMENTAL SPECIFICATIONS AND/OR SPECIAL PROVISIONS.

DESIGN SPECIFICATIONS: AASHTO STANDARD SPECIFICATIONS FOR STRUCTURAL SUPPORTS FOR HIGHWAY SIGNS, LUMINARIES AND TRAFFIC SIGNALS, 2001 AND INTERM SPECIFICATIONS UP TO 2006.

STEEL: MISCELLANEOUS STEEL SHALL CONFORM TO A.S.T.M. A-709, GRADE 36. STEEL TUBING FOR TRUSS AND POST MEMBERS SHALL CONFORM TO THE APPLICABLE REQUIREMENTS OF COLD-FORMED TUBING (A-500) GRADE "B" OR "C" (FY=42 KSI MIN.) UNLESS OTHERWISE NOTED.

ALUMINUM: ALL ALUMINUM EXCEPT SIGN PANELS SHALL CONFORM TO ASTM B-221, B-308, OR B-429 ALLOY 6061-T6 UNLESS OTHERWISE NOTED. SIGN PANELS SHALL BE .080" THICK ALUMINUM CONFORMING TO ASTM B-209 ALLOY 5052-H38 OR 6061-T6.

CONCRETE AND REINFORCING STEEL: CONCRETE USED IN FOOTINGS FOR OVERHEAD SIGN TRUSSES AND OVERHEAD CANTILEVER TRUSSES SHALL BE CLASS A1. CONCRETE FOR DRILLED SHAFTS SHALL BE CLASS "S". ALL OTHER CONCRETE MAY BE CLASS "M". DIMENSIONS RELATING TO REINFORCING STEEL FABRICATION ARE OUT TO OUT OF BAR UNLESS OTHERWISE NOTED. DIMENSIONS RELATING TO REINFORCING STEEL SPACING ARE CENTER TO CENTER OF BAR OR FACE OF CONCRETE TO CENTERLINE OF BAR. REINFORCING STEEL SHALL HAVE A MINIMUM COVERING OF 2" EXCEPT WHEN CONCRETE IS CAST AGAINST THE EARTH THEN THE COVERING WILL BE 3". ALL REINFORCING STEEL SHALL BE GRADE 60. THE FIRST DIGIT OF REINFORCING BAR NUMBER INDICATES THE BAR SIZE. THE TOP EDGES OF THE FOOTING SHALL BE CHAMFERED ¾".

CONCRETE FINISH: ALL PORTIONS OF THE FOOTINGS FOR CANTILEVERS AND TRUSSES ABOVE GROUNDLINE SHALL HAVE A FINISH IN ACCORDANCE WITH THE SPECIFICATIONS.

WELDING: ALL WELDING SHALL CONFORM TO THE LA. STANDARD SPECIFICATIONS-SECTION 809 AND SUPPLEMENTAL SPECIFICATIONS. WELDING OF GALVANIZED MEMBERS SHALL NOT BE ALLOWED WITHOUT THE PRIOR, WRITTEN APPROVAL OF THE FABRICATION ENGINEER.

NON-DESTRUCTIVE TESTING: ALL WELDS SHALL BE VISUALLY INSPECTED. MAGNETIC PARTICLE TESTING IS REQUIRED ON NOT LESS THAN 10% OF THE WELDS ON THE TRUSSES AND THEIR SUPPORT STRUCTURES.

SHOP DRAWINGS: SHOP DRAWINGS ARE REQUIRED FOR ALL OVERHEAD TRUSS, OVERHEAD CANTILEVER, FASCIA, AND ANY STRUCTURE MOUNTED SIGNS. SHOP DRAWINGS ARE NOT REQUIRED FOR EXTRUDED SIGN PANELS, UNLESS FABRICATOR INTENDS TO DEVIATE FROM THE DETAILS HEREIN. CONTRACTOR SHALL NOT INITIATE FABRICATION OF SIGNS OR SUPPORT STRUCTURES UNTIL ALL SHOP DRAWINGS ARE APPROVED BY THE ENGINEER.

GALVANIZING: ALL STRUCTURAL STEEL AND MISCELLANEOUS STEEL SHALL BE GALVANIZED IN ACCORDANCE WITH A.S.T.M. DESIGNATION A-123. THICKNESS OF GALVANIZING SHALL PROVIDE A MINIMUM 20 YEAR PROTECTION. PROPER VENTING PRACTICES SHALL BE USED AND DETAILED ON THE SHOP DRAWINGS. DAMAGE TO GALVANIZED SURFACES THAT ARE NOT TO BE ENCASED IN CONCRETE SHALL BE REPAIRED IN ACCORDANCE WITH LA. STANDARD SPECIFICATIONS SUBSECTION 811.08. ALL BOLTS, NUTS, WASHERS, AND MISC. HARDWARE SHALL BE GALVANIZED IN ACCORDANCE WITH A.S.T.M. DESIGNATION A-153. ALL FIELD HOLES IN GALVANIZED MATERIAL SHALL BE TREATED WITH A COLD GALVANIZING COMPOUND FROM THE A.M.L.

BOLTS: UNLESS NOTED, ALL THREADED CONNECTIONS SHALL INCORPORATE A LOCKING DEVICE AND HAVE A MINIMUM OF 3 THREADS BEYOND THE NUTS. ALL BOLTS SHALL BE HIGH STRENGTH BOLTS, A.S.T.M. A-325, UNLESS OTHERWISE NOTED. STAINLESS STEEL FOR BOLTS SHALL CONFORM TO A.S.T.M. DESIGNATION A-320 B8, CLASS 2 TYPE 304, OR A-193 B8, CLASS 2 TYPE 304, UNLESS OTHERWISE NOTED. STAINLESS STEEL NUTS SHALL CONFORM TO A.S.T.M. DESIGNATION A-194, GRADE 8, TYPE 304. ALUMINUM BOLTS SHALL CONFORM TO A.S.T.M. F-468 ALLOY 2024-T4 AND NUTS ARE A.S.T.M. F-467 ALLOY 6061-T6 OR 6262-T9. WHERE BOLTS ARE USED ON BEVELED SURFACES, BEVELED WASHERS SHALL BE PROVIDED TO GIVE FULL BEARING TO THE HEAD AND/OR THE NUT.

D.T.I. WASHERS: DIRECT TENSION INDICATING (D.T.I.) WASHERS SHALL BE USED ON ALL BOLTS WHERE TENSION VERIFICATION IS REQUIRED.

ANCHOR BOLTS: ANCHOR BOLTS SHALL CONFORM TO AASHTO M314, GRADE 55 (OR APPROVED EQUAL) AND BE HOT DIP GALVANIZED TO A.S.T.M. A-123. ANCHOR BOLT NUTS TO BE TIGHTENED A MINIMUM ROTATION OF 240°(2/3 TURNS) FROM THE SNUG TIGHT CONDITION. UNLESS OTHERWISE NOTED, ALL THREADED CONNECTIONS SHALL INCORPORATE A LOCKING DEVICE AND HAVE A MINIMUM OF 3 THREADS BEYOND THE NUTS.

RIVETS: ALL RIVETS SHALL BE ¼" DIAMETER BLIND RIVETS WITH POSITIVE MANDREL RETENTION. THE RIVET BODY AND MANDREL SHALL BE ALUMINUM WITH A ½" MAXIMUM DIAMETER DOME HEAD. THE RIVETS SHALL HAVE A MINIMUM ULTIMATE TENSILE STRENGTH = 875 LBS., AND CONFORM TO ASTM B-316 5056-H32.

SIGN SHEETING: UNLESS OTHERWISE NOTED, ALL SIGN MATERIAL SHALL BE IN ACCORDANCE WITH SECTION 1015 IN THE STANDARD SPECIFICATIONS. IN ORDER TO OBTAIN AN ACCEPTABLE COLOR MATCH BETWEEN MULTIPLE PANELS ON A GUIDE SIGN, ALL OF THE BACKGROUND SHEETING FOR ANY GUIDE SIGN SHALL BE THE MINIMUM WIDTH OF THE LARGEST PANEL AND SHALL COME FROM THE SAME LOT OR RUN NUMBER FROM THE SHEETING MANUFACTURER UNLESS OTHERWISE APPROVED IN WRITING, RETRO-REFLECTIVE SHEETING SHALL BE APPLIED TO PANELS IN SUCH A MANNER THAT THERE ARE NO HORIZONTAL SPLICES.

MISCELLANEOUS: THE CONTRACTOR SHALL MARK THE DATE OF FABRICATION, SHEETING MANUFACTURER CODE, AND SIZE OF SIGN ON THE BACK OF EACH SIGN WITH AN APPROVED WEATHER RESISTANT PAINT STICK. SEE DETAIL "A", SHEET NO. 3 OF 15.

ALL DIMENSIONS REQUIRED FOR SATISFACTORY INSTALLATION SHALL BE VERIFIED IN THE FIELD BY THE CONTRACTOR PRIOR TO THE FABRICATION. ADJUSTMENTS SHALL BE MADE AS DIRECTED BY THE ENGINEER.

ALL ALUMINUM SURFACES PLACED IN CONTACT WITH, OR FASTENED TO UNGALVANIZED STEEL MEMBERS SHALL BE THROUGHLY COATED WITH AN APPROVED ALUMINUM IMPREGNATED CAULKING COMPOUND.

BEFORE SHIPPING A TRUSS, IT SHALL BE ASSEMBLED IN THE SHOP WITH ALL BOLTS IN PLACE. THE DISTANCE BETWEEN CENTER LINES OF BASE PLATES SHALL BE MEASURED AND CHECKED AGAINST FIELD MEASUREMENTS OF THE COLUMN SUPPORT SYSTEM PRIOR TO SHIPMENT.

IN GENERAL, A STRUCTURE MOUNTED OVERHEAD SIGN SUPPORT SHOULD BE PLACED IN A LOW MOMENT AREA OF THE STRUCTURAL SPAN. THE IDEAL LOCATION IS WITHIN THE END 1/3 OF THE SPAN LENGTH FOR A SIMPLE SPAN STRUCTURE AND NEAR THE POINT OF CONTRAFLEXURE FOR A CONTINUOUS SPAN STRUCTURE. FOR OVERHEAD MOUNTED TYPE SIGNS, THE VERTICAL SUPPORT MEMBERS SHALL BE REPLACED WITH ONE PIECE FULL HEIGHT VERTICAL SUPPORT MEMBERS.

USE OF SECTIONS PROVIDING EQUAL OR GREATER STRENGTH THAN THE MEMBERS DESIGNATED BY THE PLANS SHALL BE SUBMITTED TO THE BRIDGE ENGINEER FOR APPROVAL.

TREE TRIMMING: THE CONTRACTOR SHALL BE RESPONSIBLE FOR MISCELLANEOUS BRUSH AND TREE TRIMMING TO ALLOW FOR FULL SIGN PRESENTATION AS DIRECTED BY THE PROJECT ENGINEER.

GUARD RAIL REQUIREMENTS: A SITE SPECIFIC GUARD RAIL LAYOUT DETAIL SHALL BE PROVIDED FOR EACH GROUND MOUNTED SIGN TRUSS AND CANTILEVER. SEE GUARD RAIL STANDARD PLANS FOR ALL DESIGN CRITERIA AND DETAILS.

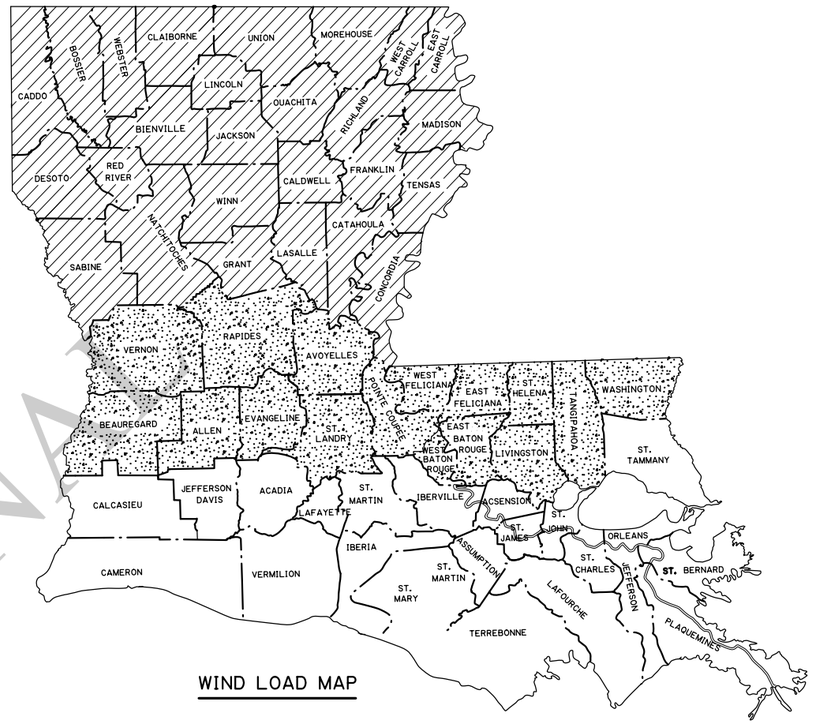

WIND LOAD MAP

WIND LOAD MAP LEGEND		
SYMBOL	ZONE	DESIGN WIND VELOCITY (MPH)
	1	90
	2	110
	3	130

FOR INFORMATIONAL USE

SHEET NUMBER

PARISH	CONTROL SECTION	STATE PROJECT

DESIGN K. BRAUNER | DETAIL K. BRAUNER | REVIEW C. GAUDRY | SERIES # 1 OF 15
CHECK P. FOSSIER | CHECK B. ALLEN

APPROVED BY CHIEF ENGINEER: DATE: 8/25/2025

REVISION OR CHANGE ORDER DESCRIPTION	DATE	NO.	BY

OVERHEAD TRAFFIC SIGNS
WIND LOAD MAP & GENERAL NOTES
TS-OH

DOTD LOUISIANA DEPARTMENT OF TRANSPORTATION & DEVELOPMENT

STANDARD PLAN

8/21/2025 14:0

IP_PWP:d1226841\BD.8.1.0.01 - Overhead Traffic Signs 01.dgn

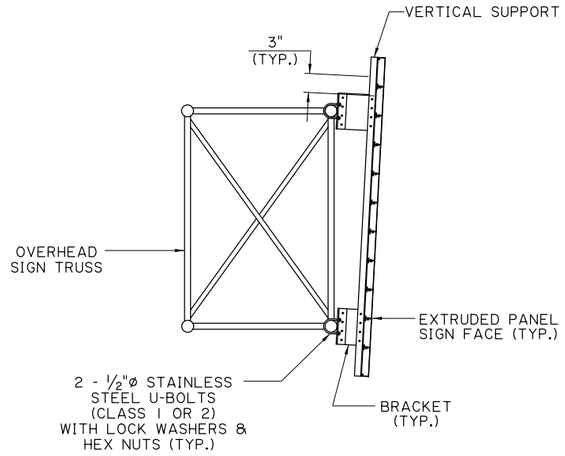

SIGN SUPPORT DETAIL

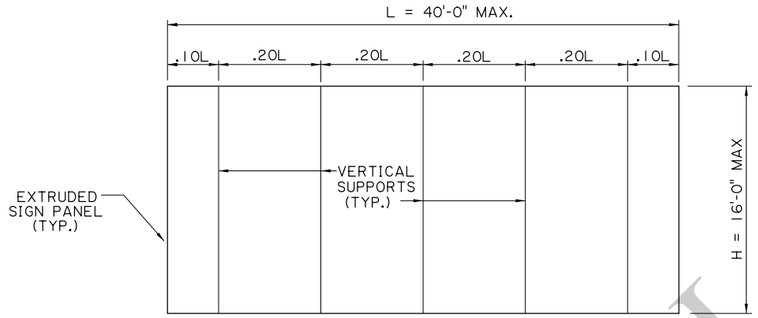

5 SUPPORTS

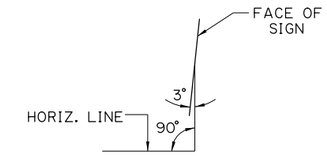

FINAL SIGN PANEL ORIENTATION

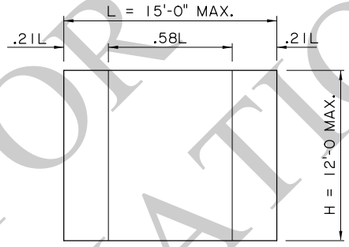

2 SUPPORTS

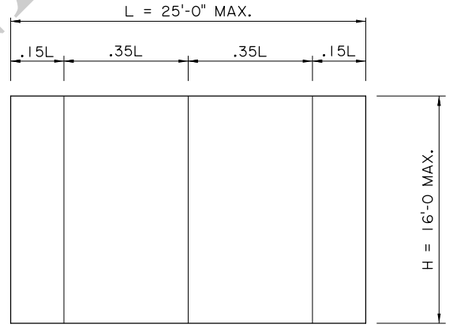

3 SUPPORTS

SPACING OF VERTICAL SUPPORTS FOR
OVERHEAD SIGN AND FASCIA SIGN INSTALLATIONS

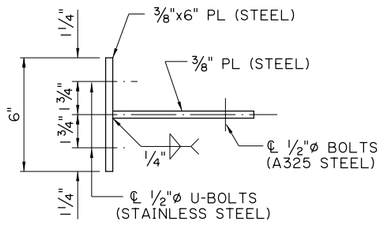

ALT. SECTION A-A

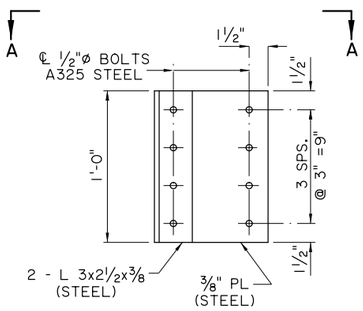

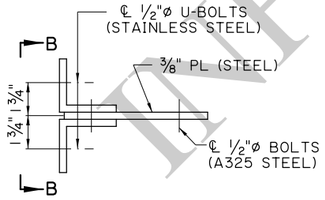

SECTION A-A

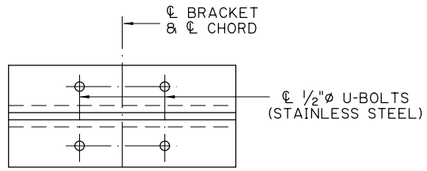

SECTION B-B

BRACKET DETAILS

NOTE: ALL STRUCTURAL STEEL SHALL BE GALVANIZED

NOTES:

VERTICAL SUPPORTS FOR OVERHEAD SIGNS SHALL BE 4x3x⅜ ALUMINUM ANGLE. TWO (2) ANGLES ARE REQUIRED FOR EACH VERTICAL SUPPORT.

FOR NEW OVERHEAD SIGN PANELS (INCLUDING FASCIA MOUNTED) INCORPORATING EXISTING STRUCTURE SUPPORTS (SIGN TRUSS, SIGN CANTILEVER, AND FASCIA), THE CONTRACTOR WILL PLACE NEW VERTICAL SUPPORT ANGLES WITHOUT SPLICES THAT EXTEND THE FULL HEIGHT OF THE PRIMARY SIGN PANEL. THESE SUPPORTS AND ALL OTHER MATERIALS REQUIRED TO CONNECT TO AN EXISTING MOUNT SHALL BE INCLUDED IN THE COST OF THE SIGN PANEL.

FOR INFORMATIONAL USE

SHEET NUMBER

PARISH | CONTROL SECTION | STATE PROJECT

DESIGN K. BRAUNER | DETAIL I.KOURILOVA | REVIEW C. GAUDRY
CHECK P. FOSSIER | CHECK K. BRAUNER | SERIES # 2 OF 15

APPROVED BY CHIEF ENGINEER: DATE: 8/25/2025

REVISION OR CHANGE ORDER DESCRIPTION | BY | DATE | NO.

STATE OF LOUISIANA DEPARTMENT OF TRANSPORTATION AND DEVELOPMENT

OVERHEAD TRAFFIC SIGNS

SIGN PANEL DETAILS

TS-OH

DOTD LOUISIANA DEPARTMENT OF TRANSPORTATION & DEVELOPMENT

STANDARD PLAN

8/21/2025 14:0

IP_PWP:d1226841\BD.8.1.0.02 - Overhead Traffic Signs 02.dgn

8/21/2025 14:0

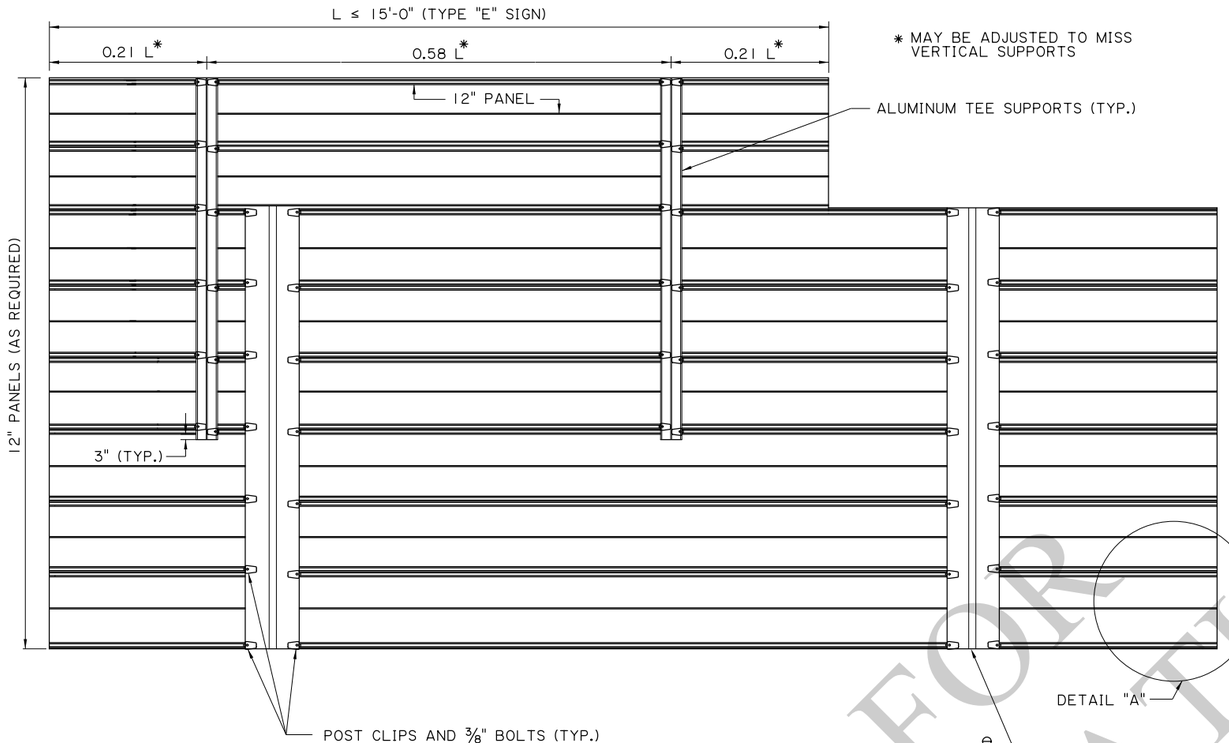

BACK ELEVATION

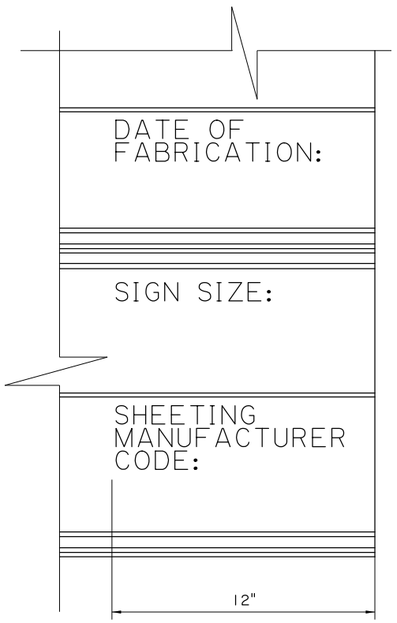

DETAIL "A"

2" LETTERING IN LAST 12" OF SIGN, SEE MISCELLANEOUS NOTE ON GENERAL NOTE SHEET.

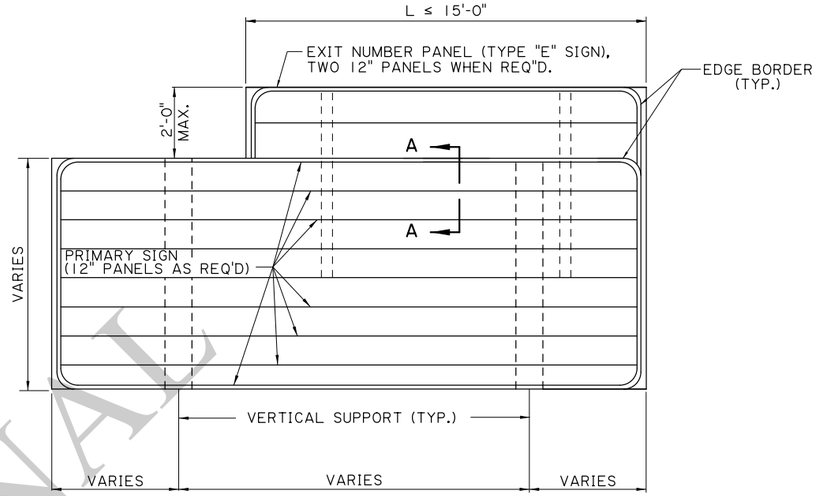

FRONT ELEVATION ⊠

(SEE SHEET NO. 4 OF 15 FOR SECTION VIEW)

NOTES:

ALL 12" EXTRUDED ALUMINUM PANELS SHALL BE ALUMINUM ALLOY 6063-T6.
ALL POST CLIPS SHALL BE ALUMINUM ALLOY 356-T6.
ALL EXTRUDED PANEL BOLTS AND POST CLIP BOLTS SHALL BE ALUMINUM.
ALL HEX LOCK NUTS SHALL BE ALUMINUM ALLOY 2017-T4.
ALL POST CLIP BOLTS SHALL BE TORQUED TO A MINIMUM OF 175 IN.-LBS.
ALL POST CLIP BOLTS, SHALL HAVE HEADS DESIGNED TO FIT THE BOLT SLOTS IN THE PANELS.

TYPE "E" SIGNS SHALL BE ATTACHED TO PRIMARY SIGNS WITH ALUMINUM TEE SUPPORTS, [DOUBLE THE HEIGHT OF THE TYPE "E" SIGN PLUS ONE (1) FOOT, ONE (1) INCH FOR LENGTH OF TEE], POST CLIPS, POST CLIP BOLTS, AND HEX LOCK NUTS.

FOR NEW OVERHEAD SIGNS (INCLUDING FASCIA MOUNTED) INCORPORATING EXISTING MOUNTS, THE CONTRACTOR WILL PLACE VERTICAL SUPPORT ANGLES WITHOUT SPLICES THAT EXTEND THE FULL HEIGHT OF THE EXTRUDED PRIMARY SIGN PANEL.

FOR NEW TYPE "D" SIGNS INCORPORATING EXISTING MOUNTS, THE EXISTING POST MAY BE REUSED IF THE NEW SIGN PANEL DOES NOT EXTEND OVER 2'-0" ABOVE THE EXISTING POST. SUCH NEW SIGNS WILL BE MOUNTED TO ALUMINUM TEE SUPPORTS BEGINNING AT THE TOP OF THE SIGN AND EXTENDING DOWNWARD FROM THE TOP OF THE POST THE DISTANCE THE NEW SIGN IS ABOVE THE EXISTING POST PLUS 1'-0". ONE TEE IS REQUIRED ADJACENT TO EACH EXISTING POST AND ATTACHED WITH POST CLIPS AS SHOWN FOR NEW TYPE "E" SIGNS. IF THE NEW SIGN EXTENDS OVER 2'-0" ABOVE THE EXISTING POST, THE CONTRACTOR IS TO REPLACE THE EXISTING POST AND MEET DETAILS FOR NEW CONSTRUCTION.

REFLECTIVE SHEETING FOR EXTRUDED PANELS: ONLY SPLICES THAT OCCUR AS PART OF THE MANUFACTURING PROCESS SHALL BE PERMITTED. A MAXIMUM OF TWO VERTICAL SPLICES ON ANY ONE SIGN FABRICATED USING EXTRUDED PANELS, WITH ONE SPLICE PER EXTRUDED PANELS SHALL BE ALLOWED. ALL "EXIT ONLY" PANELS THAT ARE DETAILED WITH THE TOP AND/OR BOTTOM EDGE NOT AT AN EXTRUDED PANEL EDGE SHALL BE FABRICATED FROM .080" ALUMINUM AND ATTACHED AS AN OVERLAY. ALL OTHER "EXIT ONLY" PANELS SHALL BE FABRICATED BY APPLYING THE YELLOW REFLECTIVE SHEETING ON THE EXTRUDED PANELS. THE REFLECTIVE SHEETING APPLIED TO EXTRUDED PANELS SHALL EXTEND APPROXIMATELY 1/4" OVER EACH SIDE AND SHALL BE ADHERED TO THE SIDE OF THE PANEL.

THIS SHEET TO BE USED WITH WIND LOAD MAP AND GENERAL NOTES SHEET.

⊠ POSSIBLE LOWER MOUNTED TYPE "E" SIGN NOT SHOWN. WHEN LOWER MOUNT IS REQUIRED, IT SHALL BE CENTERED BETWEEN THE EDGES OF THE MAIN SIGN.

⊖ SPACING AND NUMBER OF SUPPORTS VARIES. (SEE SHT. NO. 2 OF 15)

FOR INFORMATIONAL USE

SHEET NUMBER

PARISH	CONTROL SECTION	STATE PROJECT

DESIGN	K. BRAUNER	DETAIL	I. KOURILOVA	REVIEW
CHECK	P. FOSSIER	CHECK	K. BRAUNER	SERIES # 3 OF 15

APPROVED BY CHIEF ENGINEER: DATE: 8/25/2025

NO.	DATE	REVISION OR CHANGE ORDER DESCRIPTION	BY

STATE OF LOUISIANA — DEPARTMENT OF TRANSPORTATION AND DEVELOPMENT

OVERHEAD TRAFFIC SIGNS

EXTRUDED ALUMINUM PANELS

TS-OH

DOTD — LOUISIANA DEPARTMENT OF TRANSPORTATION & DEVELOPMENT

STANDARD PLAN

IP_PWP:d1226841\BD.8.1.0.03 - Overhead Traffic Signs 03.dgn

8/21/2025 14:0

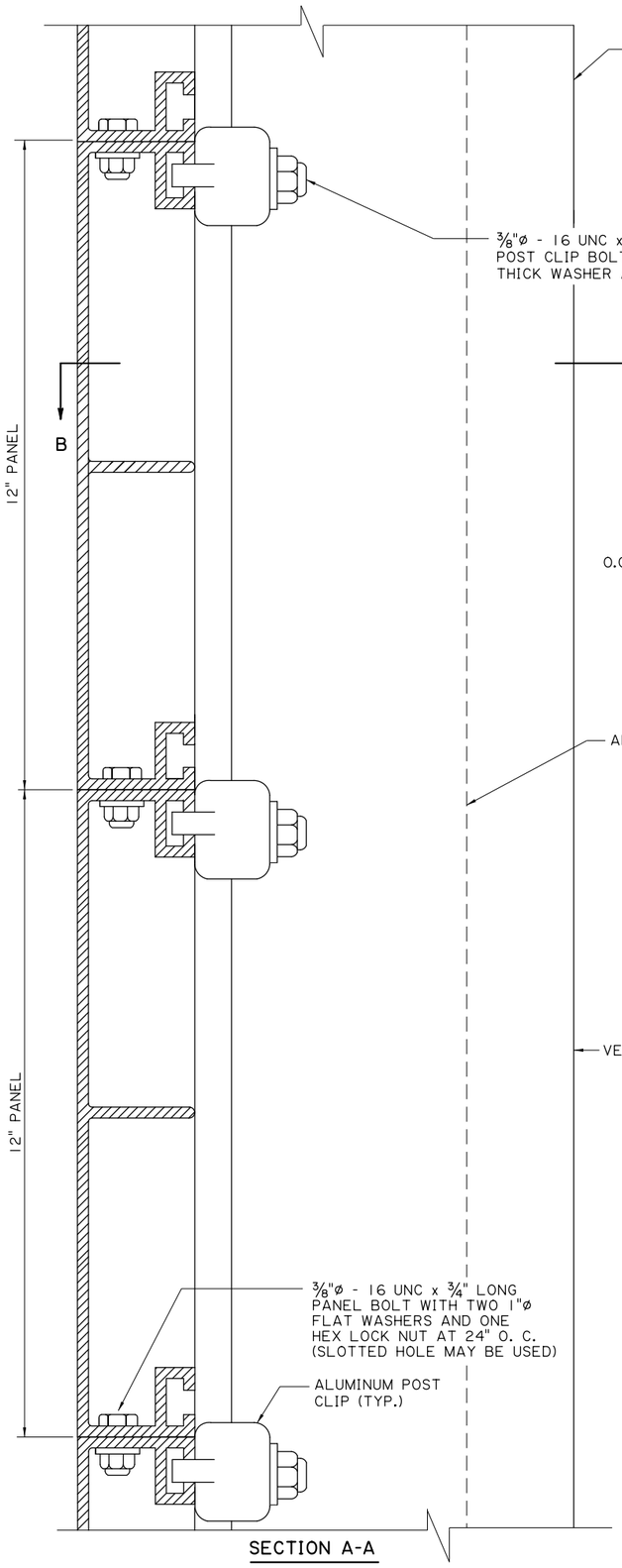

SECTION A-A

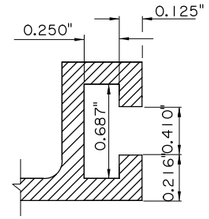

DETAIL "A"

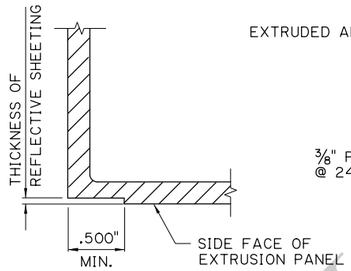

DETAIL "B"

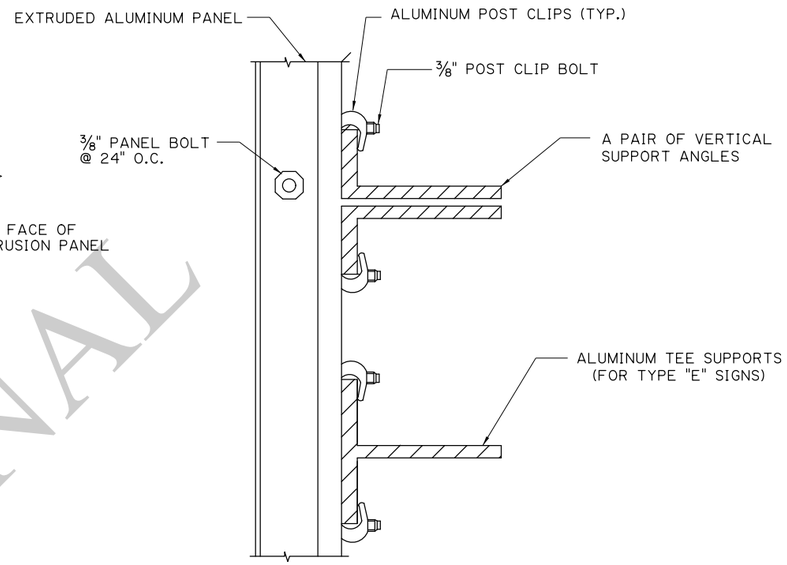

SECTION B-B

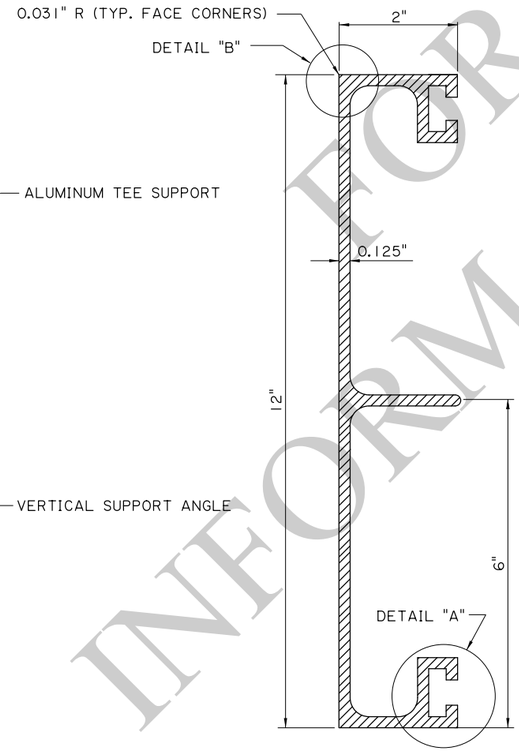

12" PANEL

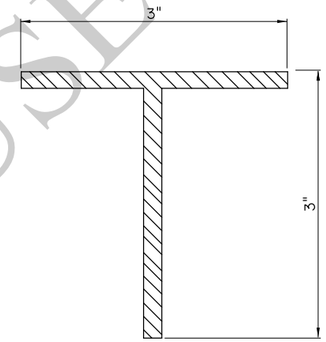

3"x3"x3/8"

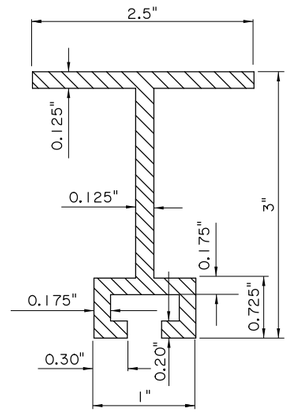

3"x2.5"

ALUMINUM TEE SUPPORTS
(FOR TYPE "E" SIGNS)

MINIMUM WALL THICKNESS IS 0.080"
UNLESS OTHERWISE SPECIFIED

FOR INFORMATIONAL USE

SHEET NUMBER

PARISH	CONTROL SECTION	STATE PROJECT

DESIGN	K. BRAUNER
CHECK	P. FOSSIER
DETAIL	I.KORILOVA
CHECK	K. BRAUNER
REVIEW	C. GAUDRY
SERIES #	4 OF 15

APPROVED BY CHIEF ENGINEER: DATE: 8/25/2025

NO.	DATE	REVISION OR CHANGE ORDER DESCRIPTION	BY

STATE OF LOUISIANA DEPARTMENT OF TRANSPORTATION AND DEVELOPMENT

OVERHEAD TRAFFIC SIGNS

EXTRUDED ALUMINUM PANELS

TS-OH

DOTD LOUISIANA DEPARTMENT OF TRANSPORTATION & DEVELOPMENT

STANDARD PLAN

IP_PWP:d1226841\BD.8.1.0.04 - Overhead Traffic Signs 04.dgn

8/21/2025 14:0
IP_PWP:d1226841\BD.8.1.0.05 - Overhead Traffic Signs 05.dgn

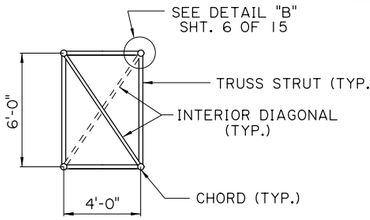

SECTION A-A

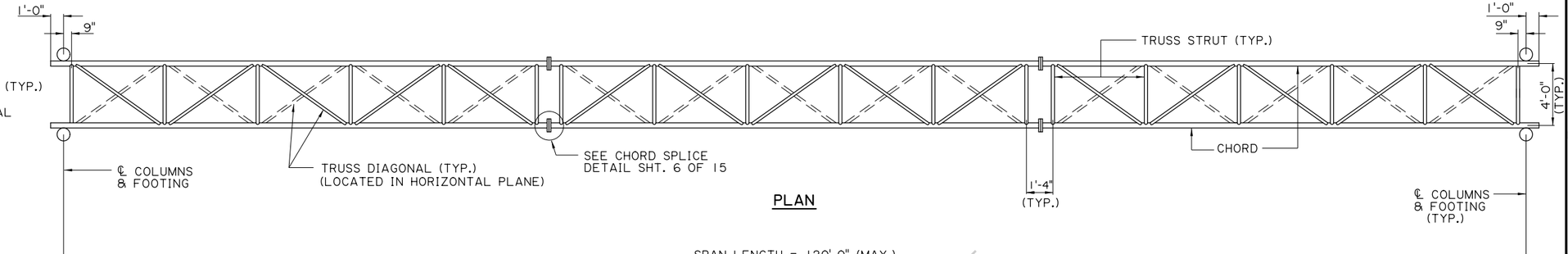

PLAN

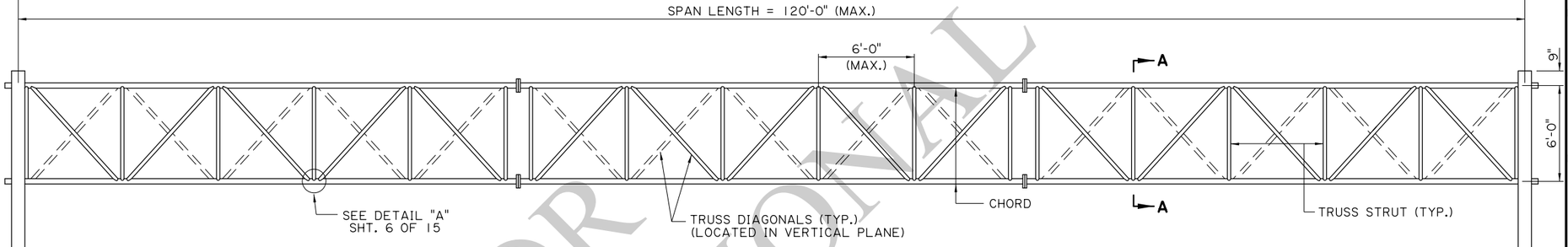

ELEVATION

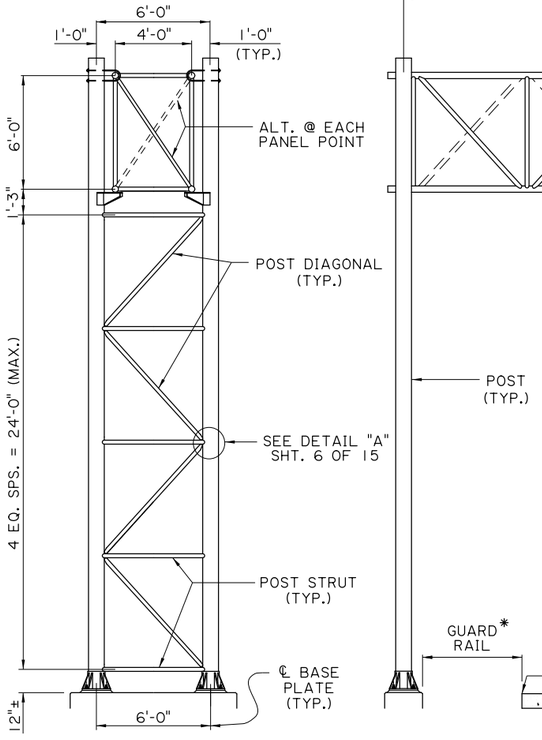

SIDE ELEVATION

ARRANGEMENT OF TRUSS SECTIONS		
SPAN LENGTH UP TO	TRUSS SECTIONS & NO. OF PANELS	ALTERNATE METHOD
60'-0"	2 @ 5	1 @ 10
66'-0"	1 @ 4 & 1 @ 7	1 @ 5 & 1 @ 6
72'-0"	3 @ 4	
78'-0"	2 @ 4 & 1 @ 5	
84'-0"	2 @ 5 & 1 @ 4	2 @ 4 & 1 @ 6
90'-0"	3 @ 5	2 @ 4 & 1 @ 7
96'-0"	2 @ 5 & 1 @ 6	
102'-0"	2 @ 5 & 1 @ 7	
108'-0"	3 @ 6	2 @ 7 & 1 @ 4
114'-0"	2 @ 6 & 1 @ 7	2 @ 7 & 1 @ 5
120'-0"	2 @ 7 & 1 @ 6	2 @ 6 & 1 @ 8

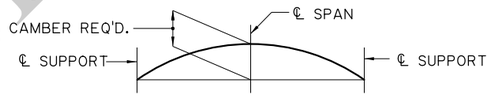

CAMBER DETAIL

(SEE SHT. NO. 7 OF 15 FOR VALUES)

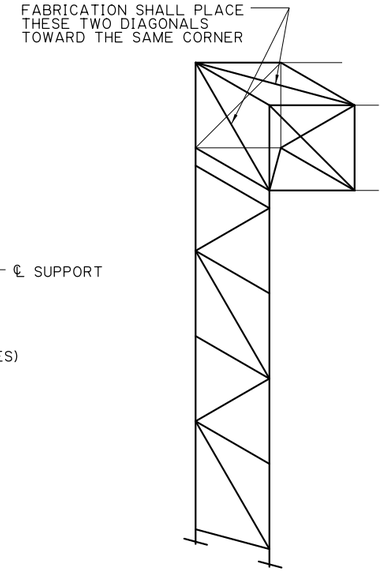

ISOMETRIC OF COLUMN

NOTES:

ALL TRUSS AND POST MEMBERS SHALL BE STEEL AND SHALL BE GALVANIZED IN ACCORDANCE WITH ASTM A-123. STEEL FOR ANCHOR BOLTS SHALL HAVE MIN. Fy = 55 ksi AND SHALL BE GALVANIZED. ALL MISCELLANEOUS STEEL SHALL BE A- 36 AND GALVANIZED AS PER ASTM A- 123. ALL EXPOSED ENDS OF PIPE SHALL BE SEALED WITH EITHER A 1/4" PLATE, (MINIMUM THICKNESS WELDED AND GROUND SMOOTH) OR A FRICTION CAP. (SEE SHT. NO. 6 OF 15 FOR DETAILS).

GRINDING OF WELD ON SEAMED PIPE WILL NOT BE REQUIRED, HOWEVER, GOOD SHOP PRACTICES WILL BE FOLLOWED IN THE APPEARANCE OF THE WELD. FOR TRUSS MEMBER SIZES NOT SHOWN, SEE TRUSS DESIGN AND FOOTING DETAIL SHEET.

METHOD OF TRANSPORTATION OF TRUSS FROM POINT OF FABRICATION TO ERECTION LOCATION SHALL SUPPORT THE TRUSS AND NOT UTILIZE THE TRUSS TO CARRY LOAD.

THIS SHEET TO BE USED WITH THE OVERHEAD TRUSS DESIGN TABLES AND THE WIND LOAD MAP AND GENERAL NOTES SHEET.

* SIGN POSTS TO BE PROTECTED WITH GUARD RAIL OR BARRIER SYSTEM AS PER LADOTD GUARD RAIL STANDARD PLANS. GUARD RAIL LAYOUT DETAILS ARE TO BE INCLUDED IN THE PLANS.

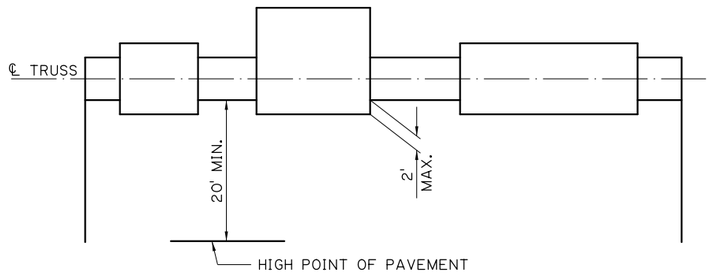

LOCATION OF TRUSS AND SIGNS

FOR INFORMATIONAL USE

SHEET NUMBER

PARISH | CONTROL SECTION | STATE PROJECT

DESIGN C. PORTER | DETAIL I.KOURILOVA | REVIEW C. GAUDRY | SERIES # 5 OF 15
CHECK K. BRAUNER | CHECK K. BRAUNER

APPROVED BY CHIEF ENGINEER: DATE: 8/25/2025

NO.	DATE	REVISION OR CHANGE ORDER DESCRIPTION	BY

OVERHEAD TRAFFIC SIGNS

OVERHEAD SIGN TRUSS (STEEL) TS-OH

LOUISIANA DEPARTMENT OF TRANSPORTATION & DEVELOPMENT

STANDARD PLAN

8/21/2025 14:0

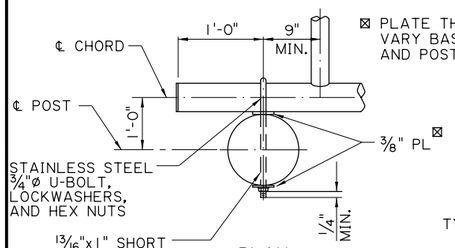

PLAN

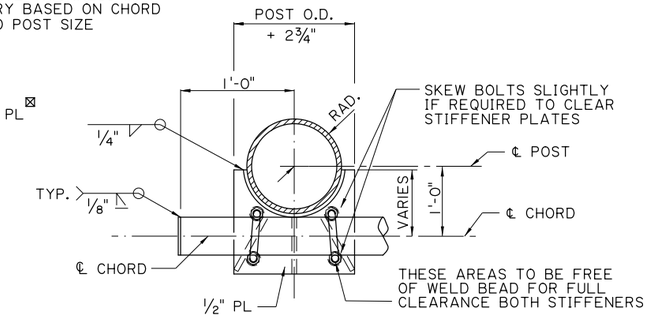

PLAN

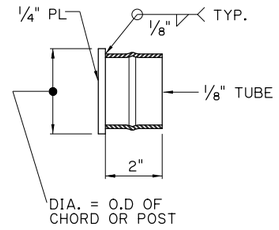

FRICTION CAP DETAIL

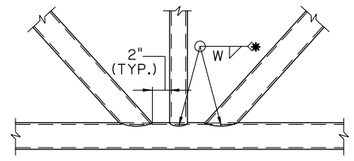

DETAIL "A"

* "W" WILL EQUAL THE WALL THICKNESS OF THE TRUSS STRUT OR TRUSS DIAGONAL WELDED TO THE CHORD. WELD SIZE NEED NOT EXCEED THE THICKNESS OF THE THINNER PART JOINED.

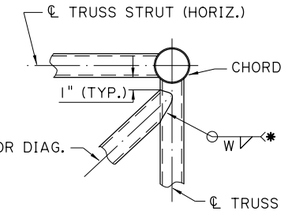

DETAIL "B"

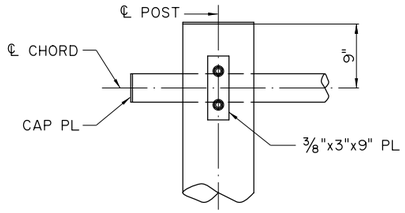

ELEVATION

UPPER CLAMP DETAIL

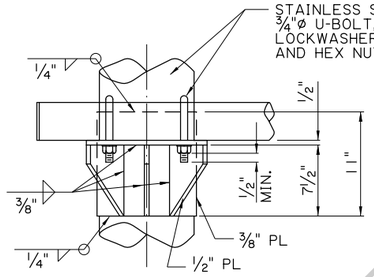

ELEVATION

LOWER CLAMP DETAIL

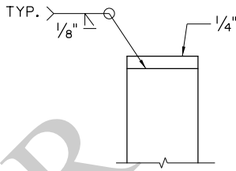

CAP PL DETAIL

FRICTION WATER TIGHT CAP MAY BE USED ON EXPOSED ENDS OF ALL PIPES, SEE DETAIL.

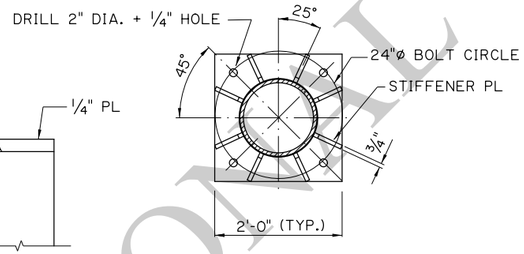

PLAN

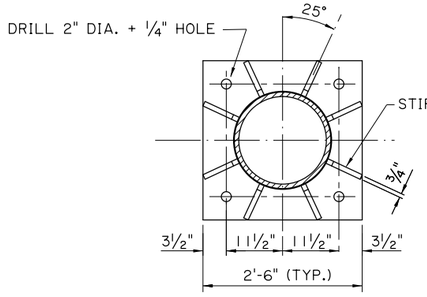

PLAN

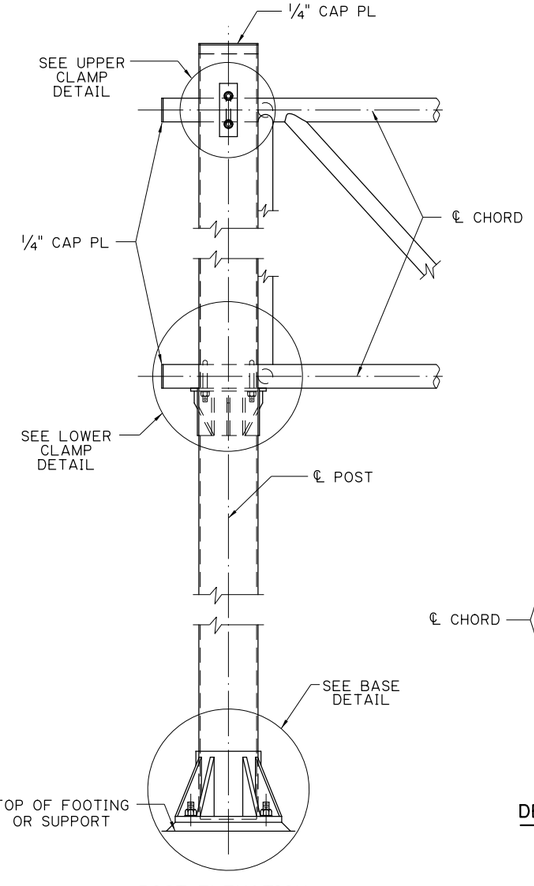

POST ELEVATION

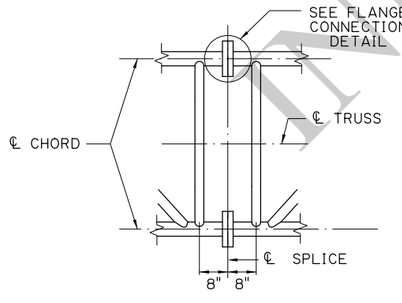

DETAIL OF CHORD SPLICE

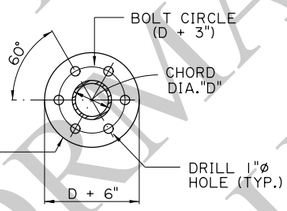

STEEL A36 PERMANENT MOLD OR SAND CASTING. AT THE CONTRACTOR'S OPTION A 1 1/2" PLATE MAY BE USED IN LIEU OF THE FLANGE CASTING.

SECTION A-A

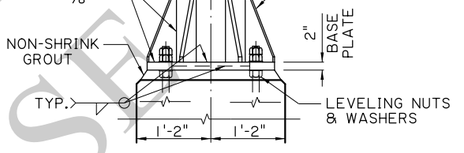

BASE DETAIL - ELEVATION ⊙

(PLATE "A")

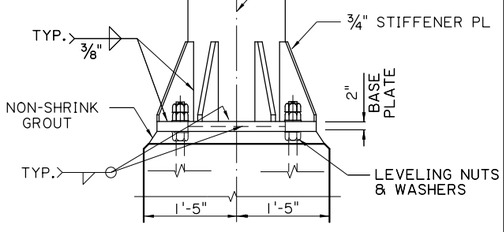

BASE DETAIL - ELEVATION △

(PLATE "B")

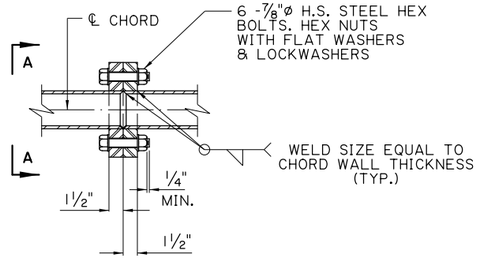

FLANGE CONNECTION DETAIL

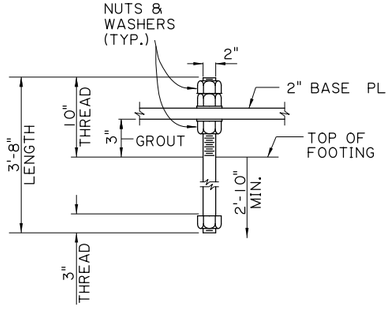

2"ø ANCHOR BOLT DETAIL

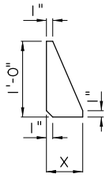

"X" = $\frac{(2'\text{-}1\frac{3}{4}" - D)}{2}$ (PLATE "A")

"X" = $\frac{(2'\text{-}8\frac{1}{2}" - D)}{2}$ (PLATE "B")

3/4" STIFFENER PL

⊙ TO BE USED WITH FOOTING "A" ONLY. (SEE SHT. NO. 8 OF 15)

△ TO BE USED WITH FOOTING "B" ONLY. (SEE SHT. NO. 8 OF 15)

FOR INFORMATIONAL USE

SHEET NUMBER

PARISH	CONTROL SECTION	STATE PROJECT

DESIGN	K. BRAUNER
CHECK	C. PORTER
DETAIL	I.KOURILOVA
CHECK	K. BRAUNER
REVIEW	C. GAUDRY
SERIES #	6 OF 15

APPROVED BY CHIEF ENGINEER: DATE: 8/25/2025

NO.	DATE	REVISION OR CHANGE ORDER DESCRIPTION	BY

STATE OF LOUISIANA

OVERHEAD TRAFFIC SIGNS

MISCELLANEOUS DETAILS (STEEL)

TS-OH

DOTD LOUISIANA DEPARTMENT OF TRANSPORTATION & DEVELOPMENT

STANDARD PLAN

IP_PWP:d1226841\BD.8.1.0.06 - Overhead Traffic Signs 06.dgn

8/21/2025 14:11
IP_PWP:d1226841\BD.8.1.0.07 - Overhead Traffic Signs 07.dgn

GROUND MOUNTED ☒ OVERHEAD SIGN TRUSS DESIGN TABLE

90 MPH WIND VELOCITY

SIGN PANEL AREA / SPAN	< 600 SQ.FT.		600-900 SQ.FT.		900-1100 SQ.FT.	
	GROUP NO.	REQ. CAMBER	GROUP NO.	REQ. CAMBER	GROUP NO.	REQ. CAMBER
< 60 FT	1	15/16"	N/A	N/A	N/A	N/A
60 - 84 FT	1	1 7/16"	2	1 9/16"	3	1 1/2"
84 - 96 FT	1	1 7/8"	3	1 15/16"	4	1 13/16"
96 - 120 FT	2	2 13/16"	4	2 3/4"	5	2 11/16"

110 MPH WIND VELOCITY

SIGN PANEL AREA / SPAN	< 600 SQ.FT.		600-900 SQ.FT.		900-1100 SQ.FT.	
	GROUP NO.	REQ. CAMBER	GROUP NO.	REQ. CAMBER	GROUP NO.	REQ. CAMBER
< 60 FT	1	15/16"	N/A	N/A	N/A	N/A
60 - 84 FT	3	1 7/16"	5	1 7/16"	6	1 7/16"
84 - 96 FT	3	1 13/16"	5	1 13/16"	6	1 3/4"
96 - 120 FT	5	2 1/2"	6	2 1/2"	8 *	2 1/2"

130 MPH WIND VELOCITY

SIGN PANEL AREA / SPAN	< 600 SQ.FT.		600-900 SQ.FT.		900-1100 SQ.FT.	
	GROUP NO.	REQ. CAMBER	GROUP NO.	REQ. CAMBER	GROUP NO.	REQ. CAMBER
< 60 FT	5	7/8"	N/A	N/A	N/A	N/A
60 - 84 FT	5	1 3/8"	8 *	1 3/8"	9 *	1 3/8"
84 - 96 FT	6	1 11/16"	8 *	1 11/16"	9 *	1 5/8"
96 - 120 FT	7	2 3/8"	10 *	2 3/8"	11 *	2 3/8"

STRUCTURE MOUNTED ⊗ OVERHEAD SIGN TRUSS DESIGN TABLE

90 MPH WIND VELOCITY

SIGN PANEL AREA / SPAN	< 600 SQ.FT.		600-900 SQ.FT.		900-1100 SQ.FT.	
	GROUP NO.	REQ. CAMBER	GROUP NO.	REQ. CAMBER	GROUP NO.	REQ. CAMBER
< 60 FT	1	15/16"	N/A	N/A	N/A	N/A
60 - 84 FT	2	1 7/16"	4	1 7/16"	4	1 7/16"
84 - 96 FT	2	1 13/16"	4	1 13/16"	5	1 3/4"
96 - 120 FT	4	2 9/16"	5	2 11/16"	7	2 1/2"

110 MPH WIND VELOCITY

SIGN PANEL AREA / SPAN	< 600 SQ.FT.		600-900 SQ.FT.		900-1100 SQ.FT.	
	GROUP NO.	REQ. CAMBER	GROUP NO.	REQ. CAMBER	GROUP NO.	REQ. CAMBER
< 60 FT	3	7/8"	N/A	N/A	N/A	N/A
60 - 84 FT	4	1 3/8"	7	1 3/8"	8	1 3/8"
84 - 96 FT	5	1 11/16"	7	1 11/16"	8	1 11/16"
96 - 120 FT	7	2 3/8"	8	2 1/2"	10	2 3/8"

130 MPH WIND VELOCITY

SIGN PANEL AREA / SPAN	< 600 SQ.FT.		600-900 SQ.FT.		900-1100 SQ.FT.	
	GROUP NO.	REQ. CAMBER	GROUP NO.	REQ. CAMBER	GROUP NO.	REQ. CAMBER
< 60 FT	6	7/8"	N/A	N/A	N/A	N/A
60 - 84 FT	7	1 5/16"	9	1 3/8"	10	1 5/16"
84 - 96 FT	8	1 5/8"	10	1 5/8"	11	1 5/8"
96 - 120 FT	10	2 1/4"	11	2 3/8"	N/A	N/A

OVERHEAD TRUSS MEMBER SIZES

MEMBER DIAMETER (IN.) x MEMBER THICKNESS (IN.)

GROUP NO.	POSTS	CHORDS	TRUSS STRUTS	TRUSS DIAGONALS	INTERIOR DIAGONALS	POST STRUTS	POST DIAGONALS
1	12.75 X 0.25	4.0 X 0.226	2.875 X 0.203	2.875 X 0.203	2.375 X 0.154	3.5 X 0.216	3.5 X 0.216
2	12.75 X 0.25	4.5 X 0.237	2.875 X 0.203	2.875 X 0.203	2.375 X 0.154	3.5 X 0.216	3.5 X 0.216
3	14.00 X 0.25	4.5 X 0.237	2.875 X 0.203	2.875 X 0.203	2.375 X 0.154	3.5 X 0.216	3.5 X 0.216
4	14.00 X 0.25	5.563 X 0.258	2.875 X 0.203	2.875 X 0.203	2.375 X 0.154	3.5 X 0.216	3.5 X 0.216
5	16.00 X 0.25	5.563 X 0.258	2.875 X 0.203	2.875 X 0.203	2.375 X 0.154	3.5 X 0.216	3.5 X 0.216
6	18.00 X 0.25	5.563 X 0.258	2.875 X 0.203	2.875 X 0.203	2.875 X 0.203	3.5 X 0.216	4.0 X 0.226
7	18.00 X 0.25	5.563 X 0.375	2.875 X 0.203	2.875 X 0.203	2.875 X 0.203	3.5 X 0.216	4.0 X 0.226
8	18.00 X 0.312	5.563 X 0.375	2.875 X 0.203	3.5 X 0.216	2.875 X 0.203	3.5 X 0.216	4.5 X 0.237
9	18.00 X 0.375	5.563 X 0.375	2.875 X 0.203	3.5 X 0.216	2.875 X 0.203	3.5 X 0.216	5.563 X 0.258
10	18.00 X 0.375	5.563 X 0.50	2.875 X 0.203	3.5 X 0.216	2.875 X 0.203	3.5 X 0.216	5.563 X 0.258
11	18.00 X 0.438	5.563 X 0.50	2.875 X 0.203	4.0 X 0.226	2.875 X 0.203	3.5 X 0.216	6.625 X 0.432

HOW TO USE TABLES:

1. DETERMINE IF TRUSS IS GROUND MOUNTED OR STRUCTURE MOUNTED.
2. FIND WIND VELOCITY USING WIND MAP ON GENERAL NOTES SHEET (SHT. NO. 1 OF 15) AND CHOOSE APPROPRIATE SECTION IN TABLE.
3. DETERMINE DESIGN SIGN AREA AND SELECT THE APPROPRIATE COLUMN. (DESIGN SIGN AREA = SUM OF ACTUAL SIGN PANEL AREAS X 1.3)
4. DETERMINE SPAN LENGTH AND CHOOSE APPROPRIATE ROW.
5. FIND CORRESPONDING GROUP NUMBER IN THE "OVERHEAD TRUSS MEMBER SIZES" TABLE AND APPLY MEMBER SIZES ACCORDINGLY. SEE PROJECT PLAN SHEET FOR "OVERHEAD TRUSS DATA TABLE".

NOTES:

ALL MEMBERS LISTED IN THE OVERHEAD TRUSS MEMBER SIZES TABLE SHALL BE STEEL PIPE OR TUBE AND SHALL HAVE A MINIMUM YIELD STRENGTH (Fy) OF 42 KSI.

TUBE OR A.N.S.I. PIPE SECTIONS PROVIDING EQUAL OR GREATER STRENGTH THAN ANY MEMBER DESIGNATED IN THE TABLE MAY BE SUBMITTED TO THE ENGINEER FOR APPROVAL.

ALL DESIGNS MUST BE CONFIRMED ON THE FABRICATION DRAWINGS AND APPROVED BY LA DOTD BEFORE FABRICATION IS INITIATED.

ALL STRUCTURE MOUNTED TRUSSES SHALL USE PLATE "B". (SEE SHT. NO. 6 OF 15.)

* FOR GROUND MOUNTED TRUSSES, GROUP NOS. 8 THROUGH 11 SHALL USE PLATE "B" AND FOOTING "B" ONLY. (SEE SHT. NO. 8 OF 15)

☒ GROUND MOUNTED TRUSSES USED ON EMBANKMENTS ≥ 10 FT. HIGH SHALL BE DESIGNED USING THE STRUCTURE MOUNTED DESIGN TABLES.

⊗ A DESIGN REQUEST MUST BE SUBMITTED FOR ALL TRUSSES WHOSE SIGN CENTERS ARE MORE THAN 50 FT. ABOVE THE SURROUNDING GROUNDLINE.

FOR INFORMATIONAL USE

SHEET NUMBER

PARISH	CONTROL SECTION	STATE PROJECT

DESIGN	C. PORTER
CHECK	K. BRAUNER
DETAIL	I.KOURILOVA
CHECK	K. BRAUNER
REVIEW	C. GAUDRY
SERIES #	7 OF 15

APPROVED BY CHIEF ENGINEER: DATE: 8/25/2025

NO.	DATE	REVISION OR CHANGE ORDER DESCRIPTION	BY

STATE OF LOUISIANA — DEPARTMENT OF TRANSPORTATION AND DEVELOPMENT

OVERHEAD TRAFFIC SIGNS

OVERHEAD TRUSS DESIGN TABLES (STEEL)

TS-OH

DOTD — LOUISIANA DEPARTMENT OF TRANSPORTATION & DEVELOPMENT

STANDARD PLAN

8/21/2025 14:11
IP_PWP:d1226841\BD.8.1.0.08 - Overhead Traffic Signs 08.dgn

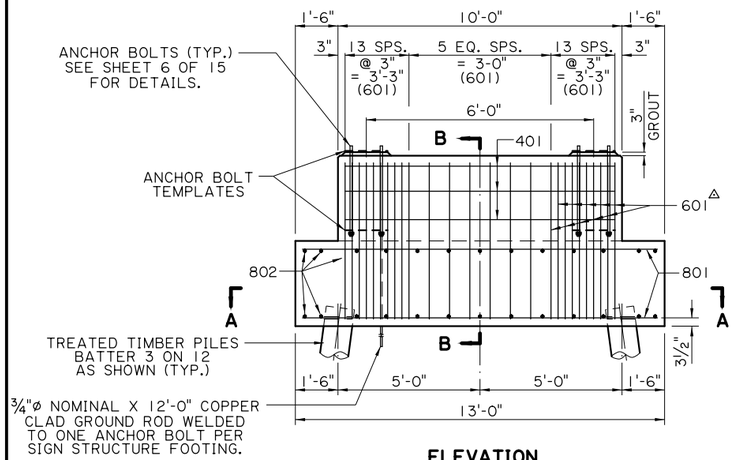

ELEVATION

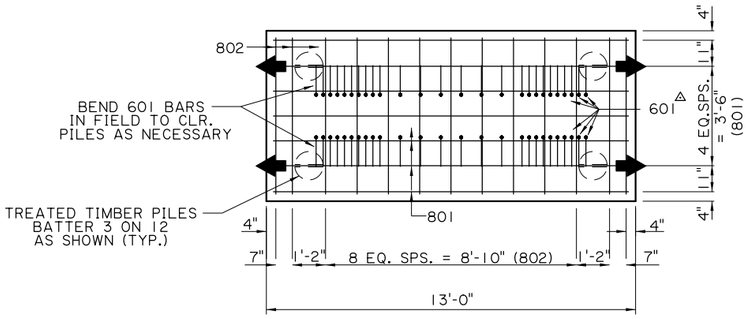

SECTION A-A

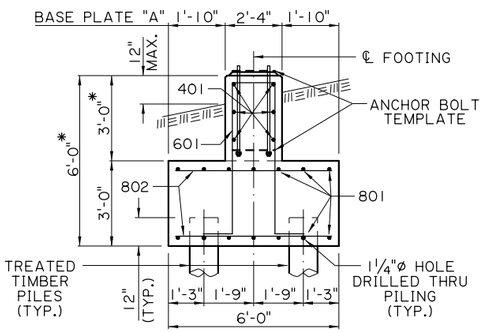

SECTION B-B

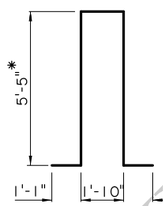

601
(4½"ø PIN)

FOOTING "A" ⊠

FOOTING PILE DATA TABLE ⊠				
WIND ZONE	FOOTING TYPE	PILE SIZE (IN.) BUTT	PILE SIZE (IN.) TIP	PILE LENGTH (FT.)
1	A	12.4	8	55
2	A	12.7	8	60
	B	11.9	8	50
3	A	13.9	8	75
	B	13.9	8	75

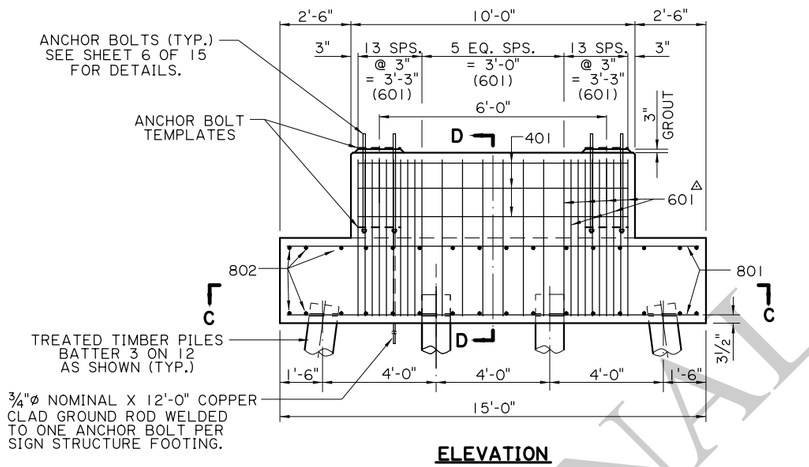

ELEVATION

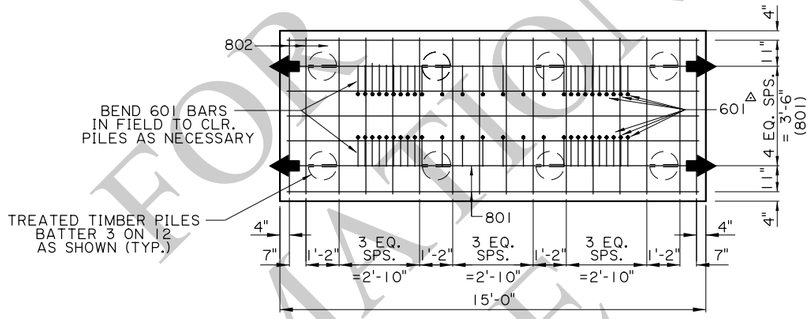

SECTION C-C

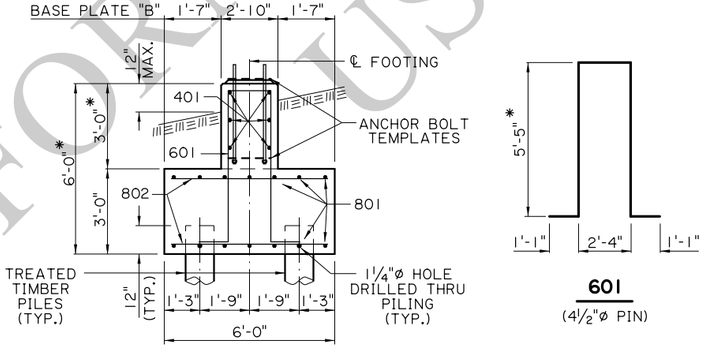

SECTION D-D

601
(4½"ø PIN)

FOOTING "B" ⊠

ESTIMATED QUANTITIES (FOOTING "A")				
BAR	NO.	UNIT LENGTH	TOTAL LENGTH	LOCATION
801	14	12'-6"	175'-0"	FOOTING
802	26	5'-6"	143'-0"	FOOTING
TOTAL NO. 8 BARS = 318'-0"			=	849 LBS.
601	32	14'-10"	474'-8"	STIRRUPS IN FOOTING & PED
TOTAL NO. 6 BARS = 474'-8"			=	713 LBS.
401	6	9'-6"	57'-0"	PEDESTAL
TOTAL NO. 4 BARS = 57'-0"			=	38 LBS.
TOTAL DEFORMED REINFORCING STEEL			=	1600 LBS.
TOTAL CLASS A1 CONCRETE			=	11.14 CU.YDS.
STRUCTURAL EXCAVATION			=	40.0 CU.YDS.
STRUCTURAL STEEL			=	(SEE A.B. DETAILS)
⊠⊖ TREATED TIMBER PILES			=	240 LIN. FT.

⊖ WIND ZONE 2 ASSUMED FOR PILE QUANTITIES. FOR OTHER WIND ZONES, ADJUST QUANTITIES ACCORDINGLY. SEE FOOTING PILE DATA TABLE.

ESTIMATED QUANTITIES (FOOTING "B")				
BAR	NO.	UNIT LENGTH	TOTAL LENGTH	LOCATION
801	14	14'-6"	203'-0"	FOOTING
802	32	5'-6"	176'-0"	FOOTING
TOTAL NO. 8 BARS = 379'-0"			=	1012 LBS.
601	32	15'-4"	490'-8"	STIRRUPS IN FOOTING & PED
TOTAL NO. 6 BARS = 490'-8"			=	737 LBS.
401	6	9'-6"	57'-0"	PEDESTAL
TOTAL NO. 4 BARS = 57'-0"			=	38 LBS.
TOTAL DEFORMED REINFORCING STEEL			=	1787 LBS.
TOTAL CLASS A1 CONCRETE			=	12.92 CU.YDS.
STRUCTURAL EXCAVATION			=	45.0 CU.YDS.
STRUCTURAL STEEL			=	(SEE A.B. DETAILS)
⊠⊖ TREATED TIMBER PILES			=	400 LIN. FT.

⊖ WIND ZONE 2 ASSUMED FOR PILE QUANTITIES. FOR OTHER WIND ZONES, ADJUST QUANTITIES ACCORDINGLY. SEE FOOTING PILE DATA TABLE.

NOTES:

THIS SHEET TO BE USED WITH WIND LOAD MAP AND GENERAL NOTES SHEET.

MAXIMUM PILE DESIGN LOAD IS 30 TONS PER PILE.

ANCHOR BOLTS SHALL BE FURNISHED IN A PREPOSITIONED ANCHOR BOLT ASSEMBLY. (TWO TEMPLATES REQUIRED)

FOR BASE PLATE DETAILS, SEE SHT. NO. 6 OF 15.

* THESE DIMENSIONS MAY BE VARIED ± ONE FOOT TO ADJUST ELEVATION FOR SITE CONDITIONS. ADJUST BARS 401 & 601 ACCORDINGLY.

△ NO. 601 BARS MAY BE MOVED TO CLEAR TRUSS ANCHOR BOLTS.

⊠ DRILLED SHAFT ALTERNATE ALLOWED. SEE SHT. NOS. 12 & 13 OF 15.

FOR INFORMATIONAL USE

SHEET NUMBER

PARISH | CONTROL SECTION | STATE PROJECT

DESIGN C. PORTER | CHECK K. BRAUNER | DETAIL I.KOURILOVA | CHECK K. BRAUNER | REVIEW C. GAUDRY | SERIES # 8 OF 15

APPROVED BY CHIEF ENGINEER: DATE: 8/25/2025

REVISION OR CHANGE ORDER DESCRIPTION | BY | DATE | NO.

OVERHEAD TRAFFIC SIGNS

PILE FOOTING DETAILS

TS-OH

DOTD LOUISIANA DEPARTMENT OF TRANSPORTATION & DEVELOPMENT

STANDARD PLAN

14:10
8/21/2025

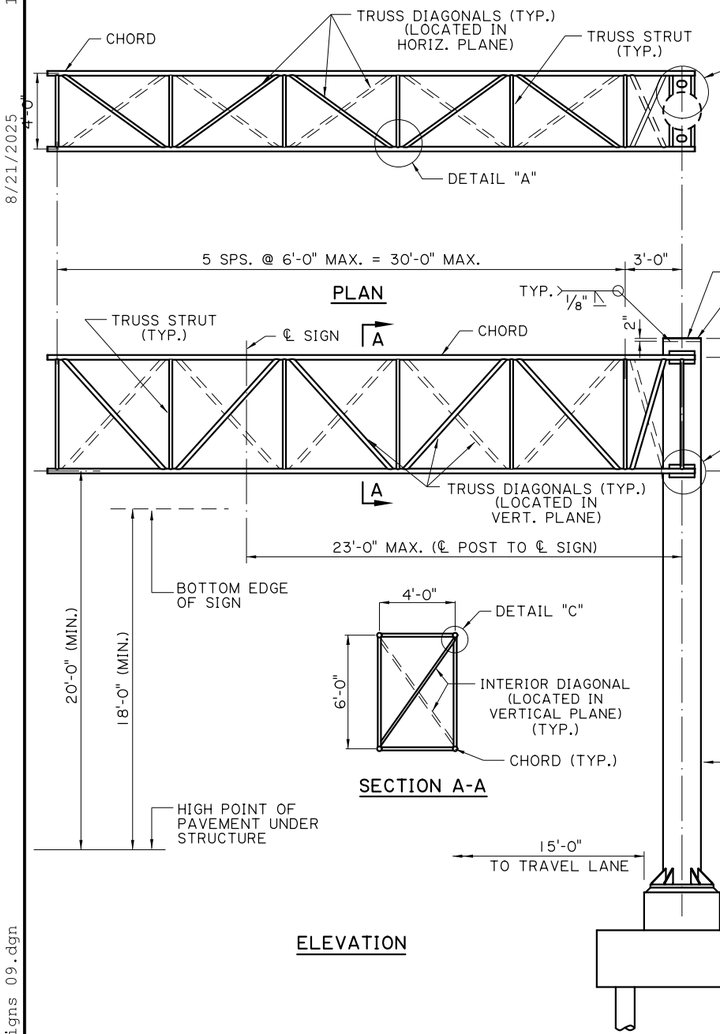

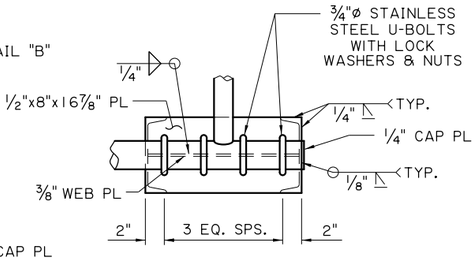

CHORD CONNECTION

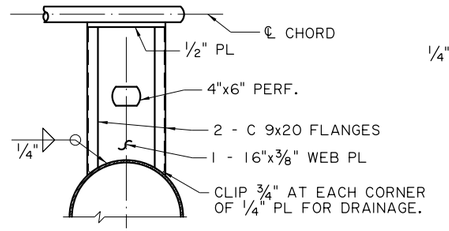

DETAIL B

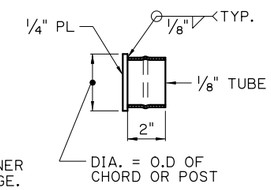

FRICTION CAP DETAIL

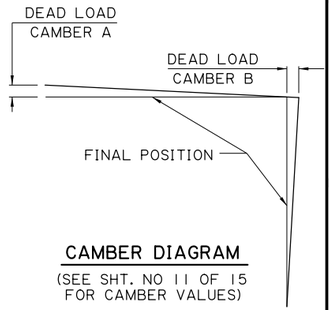

CAMBER DIAGRAM

(SEE SHT. NO 11 OF 15 FOR CAMBER VALUES)

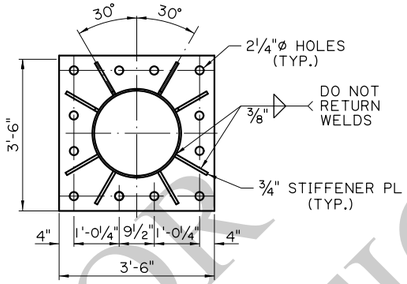

PLAN

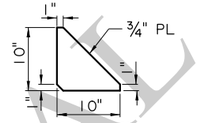

3/4" STIFFENER PLATE

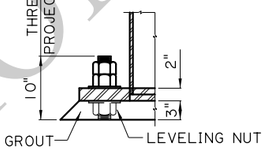

ANCHOR CONNECTION

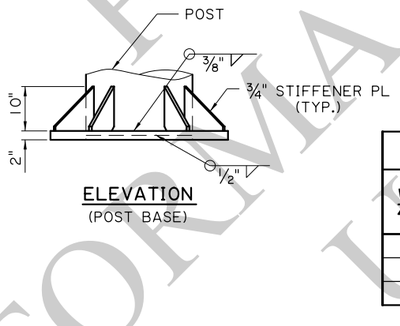

ELEVATION

(POST BASE)

ESTIMATED QUANTITIES (ONE FOOTING)				
BAR	NO.	UNIT LENGTH	TOTAL LENGTH	LOCATION
601	72	7'-8"	552'-0"	FOOTING
602	8	6'-4"	50'-8"	FOOTING
TOTAL NO. 6 BARS = 602'-8"		=		905 LBS.
401	4	15'-6"	62'-0"	STIRRUPS IN FOOTING
402	6	14'-0"	84'-0"	STIRRUPS IN FOOTING
TOTAL NO. 4 BARS = 146'-0"		=		98 LBS.
TOTAL DEFORMED REINFORCING STEEL		=		1003 LBS.
TOTAL CLASS A1 CONCRETE		=		10.17 CU.YDS.
STRUCTURAL EXCAVATION		=		34.7 CU.YDS.
STRUCTURAL STEEL (ANCHOR BOLTS)		=		578 LBS.
⊠ ⊖ TREATED TIMBER PILES		=		200 LIN.FT.

⊖ WIND ZONE 2 ASSUMED FOR PILE QUANTITIES. FOR OTHER WIND ZONES, ADJUST QUANTITIES ACCORDINGLY. SEE FOOTING PILE DATA TABLE.

FOOTING PILE DATA TABLE⊠			
WIND ZONE	PILE SIZE (IN.)		PILE LENGTH (FT.)
	BUTT	TIP	
1	11.6	8	45
2	11.9	8	50
3	13.9	8	75

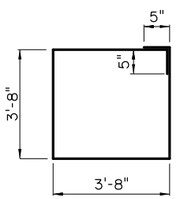

401
(2"ø PIN)

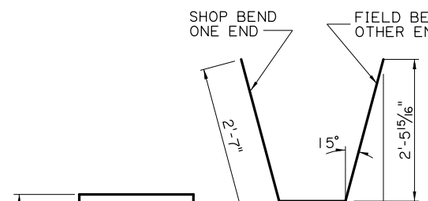

602
(4 1/2"ø PIN)

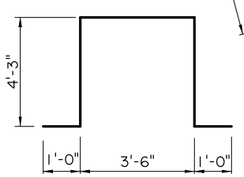

402
(2"ø PIN)

DIRECTION OF TRAFFIC

* IN SPECIAL CASES, WITH PRIOR APPROVAL FROM THE D.O.T.D. BRIDGE DESIGN ENGINEER, THIS DIMENSION MAY BE EXCEEDED.

△ ANCHOR BOLTS TO BE TIGHTENED ACCORDING TO SPECIAL PROVISIONS. ANCHOR BOLTS SHALL BE FURNISHED IN A PREPOSITIONED ANCHOR BOLT ASSEMBLY. (TWO TEMPLATES REQUIRED)

❶ ALTERNATE CAP: FRICTION WATER TIGHT CAP MAY BE USED ON EXPOSED ENDS OF ALL PIPES. SEE DETAILS.

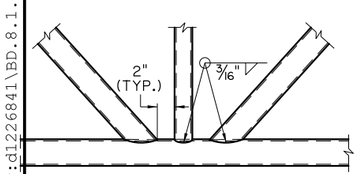

DETAIL A

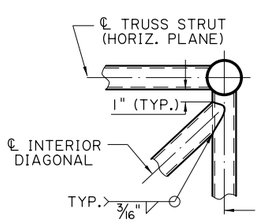

DETAIL C

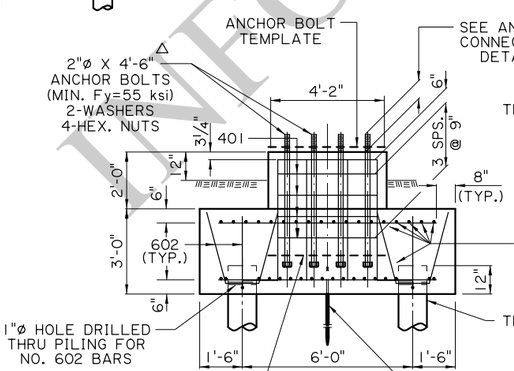

ELEVATION

FOOTING DETAIL⊠

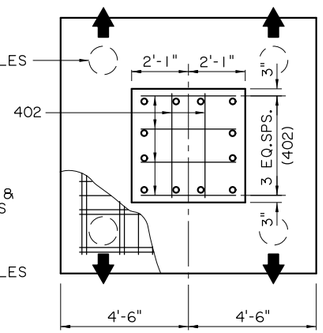

PLAN

NOTES:

ALL TRUSS AND POST MEMBERS SHALL BE STEEL AND SHALL BE GALVANIZED IN ACCORDANCE WITH ASTM A-123.

THIS SHEET TO BE USED WITH THE CANTILEVER DESIGN TABLES AND THE GENERAL NOTES SHEET.

THE MAXIMUM PILE DESIGN LOAD IS 30 TONS PER PILE.

⊠ DRILLED SHAFT ALTERNATE ALLOWED. SEE SHT. NO. 12 OF 15.

FOR INFORMATIONAL USE

SHEET NUMBER

PARISH	CONTROL SECTION	STATE PROJECT

DESIGN	K. BRAUNER
CHECK	C. PORTER
DETAIL	I.KORILOVA
CHECK	K. BRAUNER
REVIEW	C. GAUDRY
SERIES #	9 OF 15

APPROVED BY CHIEF ENGINEER: DATE: 8/25/2025

NO.	DATE	REVISION OR CHANGE ORDER DESCRIPTION	BY

STATE OF LOUISIANA DEPARTMENT OF TRANSPORTATION & DEVELOPMENT

OVERHEAD TRAFFIC SIGNS

GROUND MOUNTED CANTILEVER (STEEL)

TS-OH

STANDARD PLAN

IP_PWP:d1226841\BD.8.1.0.09 - Overhead Traffic Signs 09.dgn

8/21/2025 14:11
IP_PWP:d1226841\BD.8.1.0.10 - Overhead Traffic Signs 10.dgn

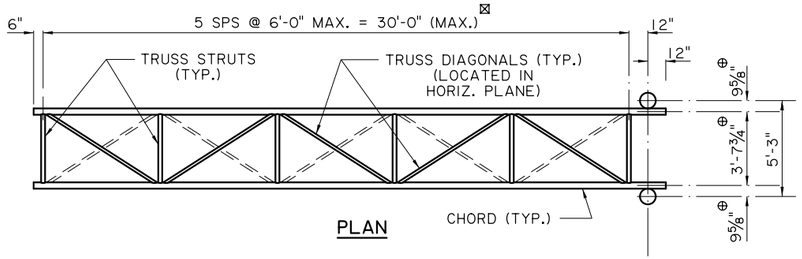

PLAN

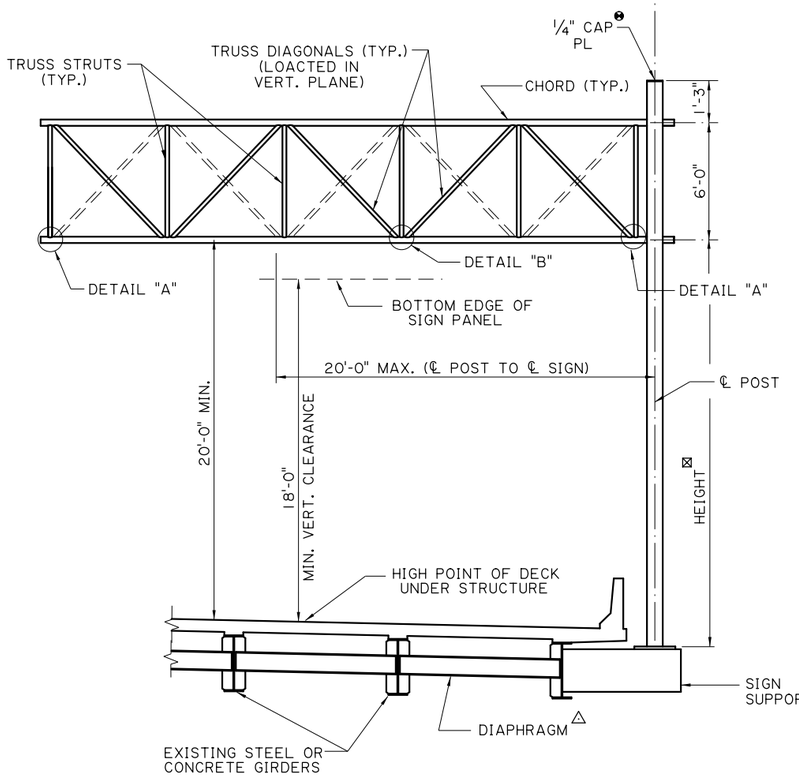

ELEVATION

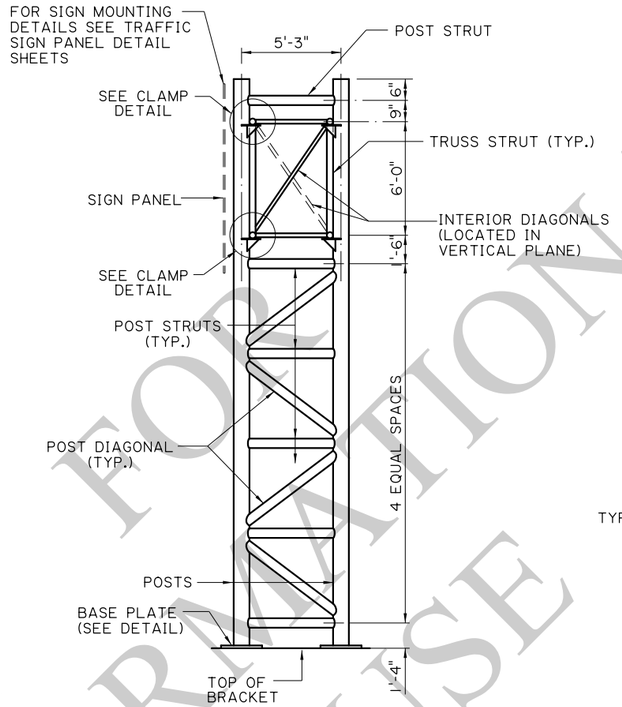

SIDE ELEVATION

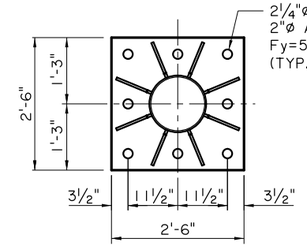

PLAN

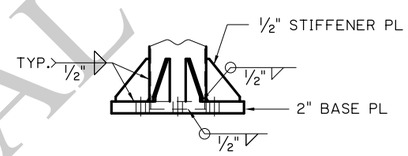

ELEVATION

BASE PLATE DETAILS

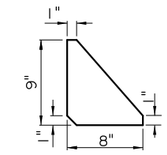

½" STIFFENER PL

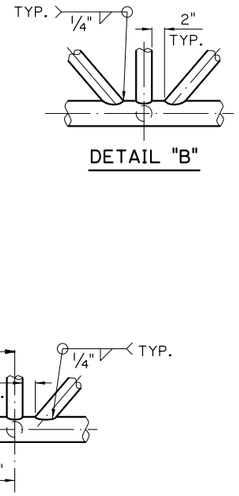

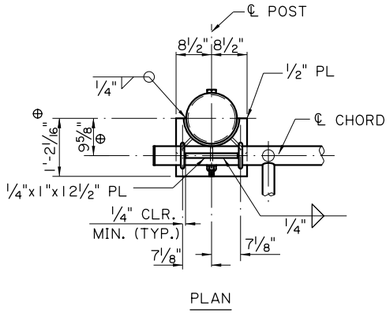

PLAN

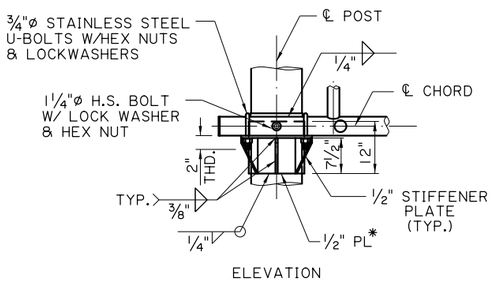

ELEVATION

CLAMP DETAIL

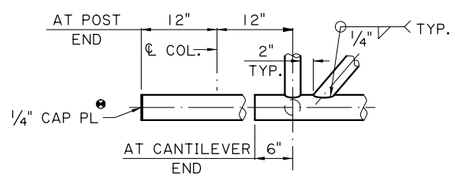

DETAIL "A"

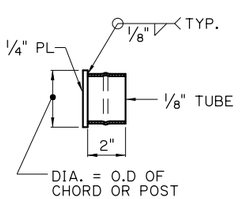

FRICTION CAP DETAIL
(ALTERNATE TO WELDED CAP PLATE)

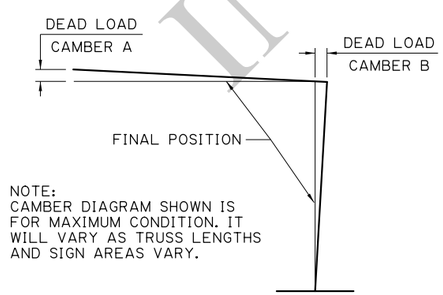

CAMBER DIAGRAM

NOTES:

ALL TRUSS AND POST MEMBERS SHALL BE STEEL AND SHALL BE GALVANIZED IN ACCORDANCE WITH ASTM A-123.

⊕ EXACT DIMENSION TO BE DETERMINED BY FABRICATOR PRIOR TO SUBMITTING SHOP DRAWINGS.

⊠ EXACT LENGTH TO BE DETERMINED IN THE FIELD BEFORE SHOP DRAWINGS ARE SUBMITTED FOR APPROVAL.

* TO PREVENT WALL DAMAGE TO POST DURING GALVANIZING, DRILL A HIGH & A LOW ¼" ø HOLE IN THE ½" THICK PLATE FOR VENTING.

△ SIGN SUPPORT MAY BE STEEL OR CONCRETE. IT MAY BE ATTACHED TO THE STRUCTURE (SHOWN) OR MAY BE ATTACHED TO THE SUBSTRUCTURE OR TO AN ADJACENT RETAINING WALL.

❶ SEE FRICTION CAP DETAIL FOR ALTERNATE TO WELDED CAP PLATE.

FOR INFORMATIONAL USE

SHEET NUMBER

PARISH	CONTROL SECTION	STATE PROJECT

DESIGN	K. BRAUNER	DETAIL	I. KOURILOV	REVIEW	C. GAUDRY	SERIES # 10 OF 15
CHECK	C. PORTER	CHECK	K. BRAUNER			

APPROVED BY CHIEF ENGINEER: DATE: 8/25/2025

NO.	DATE	REVISION OR CHANGE ORDER DESCRIPTION	BY

OVERHEAD TRAFFIC SIGNS

STRUCTURE MOUNTED CANTILEVER (STEEL)

TS-OH

LOUISIANA DEPARTMENT OF TRANSPORTATION & DEVELOPMENT

STANDARD PLAN

8/21/2025 14:11
IP_PWP:d1226841\BD.8.1.0.11 - Overhead Traffic Signs 11.dgn

GROUND MOUNTED ⊕ CANTILEVER DESIGN TABLE

WIND SPEED	GROUP NO.	CAMBER A	CAMBER B	MAX. SIGN AREA
90 MPH	1	2 1/8"	3/4"	300 SQ.FT.
110 MPH	2	1 7/8"	5/8"	300 SQ.FT.
130 MPH	3	1 13/16"	5/8"	300 SQ.FT.

GROUND MOUNTED CANTILEVER MEMBER SIZES

MEMBER DIAMETER (IN.) X MEMBER THICKNESS (IN.)

GROUP NO.	POSTS	CHORDS	TRUSS STRUTS	TRUSS DIAGONALS	INTERIOR DIAGONALS
1	24.0 X 0.375	2.875 X 0.203	2.875 X 0.203	2.875 X 0.203	2.375 X 0.154
2	24.0 X 0.50	3.5 X 0.216	2.875 X 0.203	2.875 X 0.203	2.375 X 0.154
3	24.0 X 0.562	4.5 X 0.237	2.875 X 0.203	2.875 X 0.203	2.375 X 0.154

STRUCTURE MOUNTED ⊡ CANTILEVER DESIGN TABLE

WIND SPEED	GROUP NO.	CAMBER A	CAMBER B	MAX. SIGN AREA
90 MPH	1	6"	3 3/4"	250 SQ.FT.
110 MPH	2	6"	3 3/4"	250 SQ.FT.
130 MPH	3	6"	3 3/4"	200 SQ.FT.

STRUCTURE MOUNTED CANTILEVER MEMBER SIZES

MEMBER DIAMETER (IN.) X MEMBER THICKNESS (IN.)

GROUP NO.	POSTS	CHORDS	TRUSS STRUTS	TRUSS DIAGONALS	INTERIOR DIAGONALS	POST STRUTS	POST DIAGONALS
1	12.75 X 0.375	5.563 X 0.258	2.875 X 0.203	2.875 X 0.203	2.375 X 0.154	6.625 X 0.280	6.625 X 0.280
2	14.00 X 0.50	5.563 X 0.375	2.875 X 0.203	2.875 X 0.203	2.875 X 0.203	6.625 X 0.432	6.625 X 0.432
3	14.00 X 0.50	5.563 X 0.375	2.875 X 0.203	2.875 X 0.203	2.875 X 0.203	6.625 X 0.562	6.625 X 0.562

HOW TO USE TABLES:

1. DETERMINE IF CANTILEVER IS GROUND MOUNTED OR STRUCTURE MOUNTED.
2. FIND WIND VELOCITY USING WIND MAP ON GENERAL NOTES SHEET (SHT. NO. 1 OF 15) AND CHOOSE APPROPRIATE ROW IN TABLE.
3. VERIFY THAT THE PROPOSED SIGN AREA DOES NOT EXCEED THE MAXIMUM ALLOWABLE AREA.
4. FIND CORRESPONDING GROUP NUMBER IN THE APPROPRIATE "CANTILEVER MEMBER SIZES" TABLE AND APPLY MEMBER SIZES ACCORDINGLY. SEE PROJECT PLAN SHEET FOR "CANTILEVER DATA TABLE".

NOTES:

ALL MEMBERS LISTED IN THE CANTILEVER MEMBER SIZES TABLE SHALL BE STEEL PIPE OR TUBE AND SHALL HAVE A MINIMUM YIELD STRENGTH (Fy) OF 42 KSI.

TUBE OR A.N.S.I. PIPE SECTIONS PROVIDING EQUAL OR GREATER STRENGTH THAN ANY MEMBER DESIGNATED IN THE TABLE MAY BE SUBMITTED TO THE ENGINEER FOR APPROVAL.

ALL DESIGNS MUST BE CONFIRMED ON THE FABRICATION DRAWINGS AND APPROVED BY LA DOTD BEFORE FABRICATION IS INITIATED.

THE CAMBER VALUES LISTED IN THE TABLES ARE THEORETICAL VALUES ONLY. THE CONTRACTOR SHALL ENSURE THAT AFTER ERECTION OF THE SIGN TRUSS AND INSTALLATION OF THE SIGN PANELS, THE TRUSS SPAN DOES NOT DEFLECT BELOW HORIZONTAL.

⊕ A DESIGN REQUEST MUST BE SUBMITTED FOR ALL GROUND MOUNTED CANTILEVERS USED ON EMBANKMENTS ≥ 10 FT. HIGH.

⊡ A DESIGN REQUEST MUST BE SUBMITTED FOR ALL STRUCTURE MOUNTED CANTILEVERS WHOSE SIGN CENTERS ARE MORE THAN 50 FT. ABOVE THE SURROUNDING GROUNDLINE.

FOR INFORMATIONAL USE

SHEET NUMBER

PARISH	CONTROL SECTION	STATE PROJECT

DESIGN	K. BRAUNER
CHECK	C. PORTER
DETAIL	I. KOURILOV
CHECK	K. BRAUNER
REVIEW	C. GAUDRY
SERIES #	11 OF 15

APPROVED BY CHIEF ENGINEER: DATE: 8/25/2025

NO.	DATE	REVISION OR CHANGE ORDER DESCRIPTION	BY

STATE OF LOUISIANA

OVERHEAD TRAFFIC SIGNS

CANTILEVER DESIGN TABLES (STEEL)

TS-OH

DOTD LOUISIANA DEPARTMENT OF TRANSPORTATION & DEVELOPMENT

STANDARD PLAN

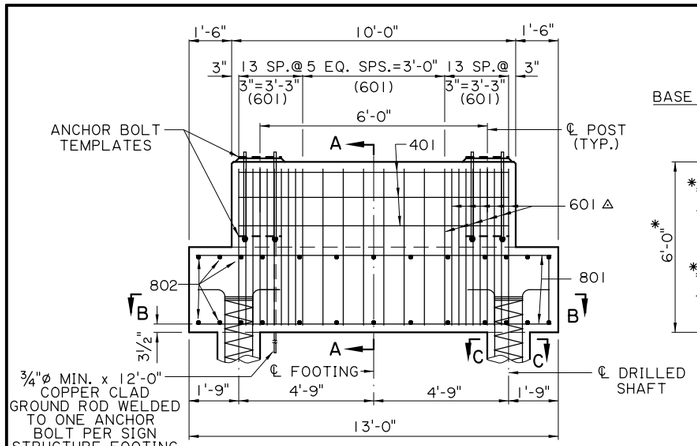

ELEVATION

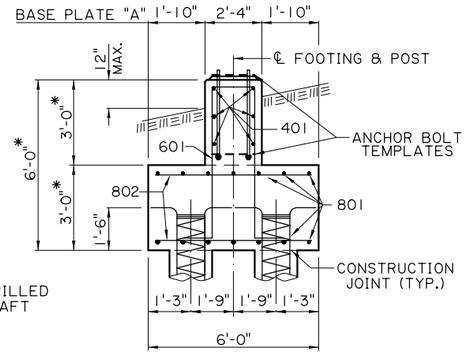

SECTION A-A

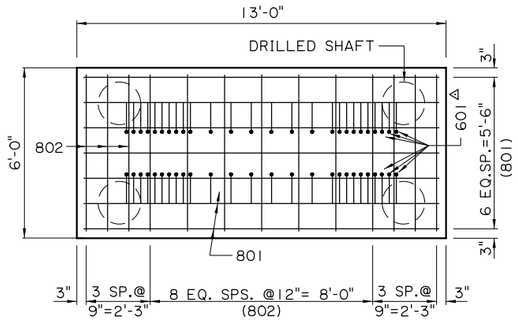

SECTION B-B

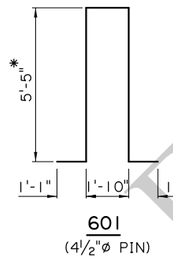

601
(4½"ø PIN)

DRILLED SHAFT FOOTING "A"
(OVERHEAD SIGN TRUSS)

DRILLED SHAFT DATA TABLE (FOOTING "A")				
WIND ZONE	SHAFT SIZE (IN.)	SHAFT LENGTH (FT.)	X	Y (FT.)
1	18	30	62	31
2	18	35	72	36
3	18	60	122	61

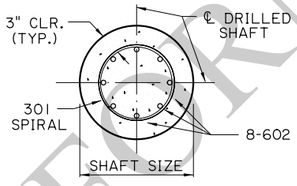

SECTION C-C

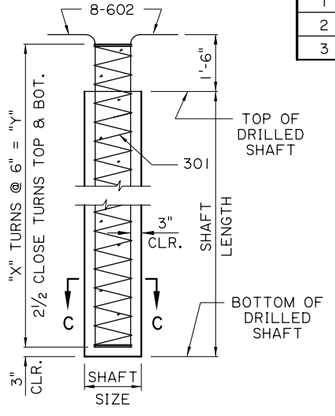

DRILLED SHAFT DETAIL

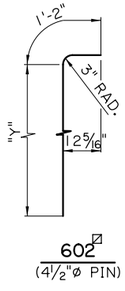

602 ⊠
(4½"ø PIN)

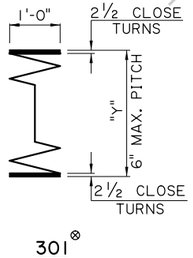

301 ⊗

ESTIMATED QUANTITIES (DRILLED SHAFT FOOTING "A")				
BAR	NO.	UNIT LENGTH	TOTAL LENGTH	LOCATION
801	14	12'-6"	175'-0"	FOOTING
802	26	5'-6"	143'-0"	FOOTING
TOTAL NO. 8 BARS = 318'-0"			=	849 LBS.
601	32	14'-10"	474'-8"	STIRRUPS IN FOOTING & PED.
TOTAL NO. 6 BARS = 474'-8"			=	713 LBS.
401	6	9'-6"	57'-0"	PEDESTAL
TOTAL NO. 4 BARS = 57'-0"			=	38 LBS.
TOTAL DEFORMED REINFORCING STEEL			=	1600 LBS.
TOTAL CLASS A1 CONCRETE			=	11.26 CU.YDS.
STRUCTURAL EXCAVATION			=	40.0 CU.YDS.
STRUCTURAL STEEL			=	(SEE ANCHOR BOLT DETAILS)
⊖ DRILLED SHAFT			=	140 LIN. FT.

ESTIMATED QUANTITIES (CANTILEVER SIGN TRUSS ; ONE FOOTING)				
BAR	NO.	UNIT LENGTH	TOTAL LENGTH	LOCATION
601	72	7'-8"	552'-0"	FOOTING
TOTAL NO. 6 BARS = 552'-0"			=	829 LBS.
401	4	15'-6"	62'-0"	STIRRUPS IN FOOTING & PED.
402	6	14'-0"	84'-0"	STIRRUPS IN FOOTING & PED.
TOTAL NO. 4 BARS = 146'-0"			=	98 LBS.
TOTAL DEFORMED REINFORCING STEEL			=	927 LBS.
TOTAL CLASS A1 CONCRETE			=	10.29 CU.YDS.
STRUCTURAL EXCAVATION			=	34.7 CU.YDS.
STRUCTURAL STEEL			=	(SEE ANCHOR BOLT DETAILS)
⊖ DRILLED SHAFT			=	120 LIN.FT.

ESTIMATED QUANTITIES (ONE DRILLED SHAFT ; L = 35'-0") ⊖				
BAR	NO.	UNIT LENGTH	TOTAL LENGTH	LOCATION
⊠ 602	8	37'-2"	297'-4"	DRILLED SHAFT
TOTAL NO. 6 BARS = 297'-4"			=	447 LBS.
⊗ 301	1	237'-3"	237'-3"	SPIRAL
TOTAL NO. 3 BARS = 237'-3"			=	89 LBS.
TOTAL DEFORMED REINFORCING STEEL			=	536 LBS.
TOTAL CLASS S CONCRETE			=	2.29 CU.YDS.

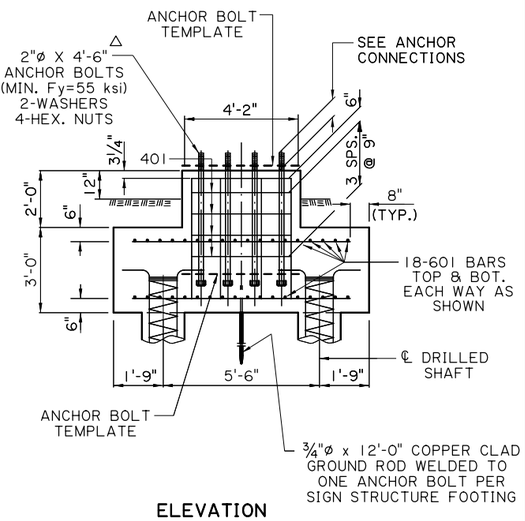

ELEVATION

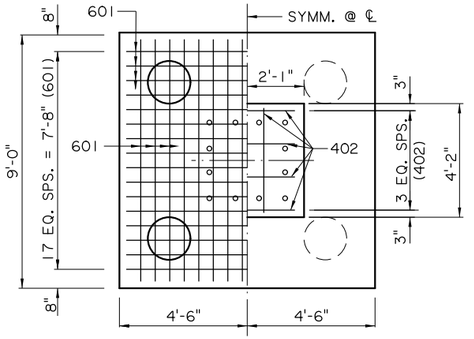

PLAN

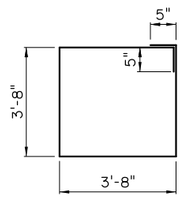

401
(2"ø PIN)

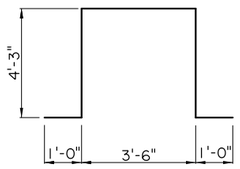

402
(2"ø PIN)

DRILLED SHAFT CANTILEVER FOOTING

DRILLED SHAFT DATA TABLE (CANTILEVER FOOTING)				
WIND ZONE	SHAFT SIZE (IN.)	SHAFT LENGTH (FT.)	X	Y (FT.)
1	18	30	62	31
2	18	30	62	31
3	18	60	122	61

NOTES:

THIS DRILLED SHAFT ALTERNATE IS ALLOWED IN LIEU OF TIMBER PILES AND IS A SUPPLEMENT TO PLAN SHEET NO. 8 OF 15.

FOR ANCHOR BOLT DETAILS, SEE TYPE II TRUSS & CANTILEVER DETAILS AND THE GENERAL NOTES.

ANCHOR BOLTS SHALL BE FURNISHED IN A PREPOSITIONED ANCHOR BOLT ASSEMBLY. (TWO TEMPLATES REQUIRED)

* THESE DIMENSIONS MAY VARY ± ONE FOOT TO ADJUST ELEVATION FOR SITE ADJUST 401 & 601 BARS ACCORDINGLY.

△ NO. 601 BARS MAY BE MOVED TO CLEAR TRUSS ANCHOR BOLTS.

⊖ WIND ZONE 2 ASSUMED FOR SHAFT QUANTITIES. FOR OTHER WIND ZONES, ADJUST QUANTITIES ACCORDINGLY. SEE DRILLED SHAFT DATA TABLES.

⊠ IF A SPLICE IS REQUIRED, THE MINIMUM SPLICE LENGTH SHALL BE 2'-9".

⊗ IF A SPLICE IS REQUIRED, THE MINIMUM SPLICE LENGTH SHALL BE 1½ TURNS.

FOR INFORMATIONAL PURPOSES ONLY

SHEET NUMBER

PARISH | CONTROL SECTION | STATE PROJECT

DESIGN K. BRAUNER | DETAIL I. KOURILOVA | REVIEW C. GAUDRY | SERIES # 12 OF 15
CHECK C. PORTER | CHECK K. BRAUNER

APPROVED BY CHIEF ENGINEER: DATE: 8/25/2025

NO.	DATE	REVISION OR CHANGE ORDER DESCRIPTION	BY

OVERHEAD TRAFFIC SIGNS
DRILLED SHAFT FOOTING ALT. TS-OH

DOTD LOUISIANA DEPARTMENT OF TRANSPORTATION & DEVELOPMENT

STANDARD PLAN

8/21/2025 14:1

IP_PWP:d1226841\BD.8.1.0.12 - Overhead Traffic Signs 12.dgn

8/21/2025 14:1

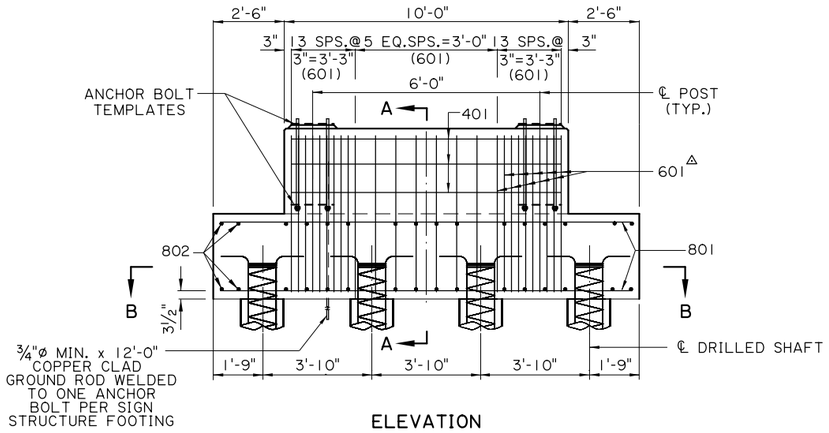

ELEVATION

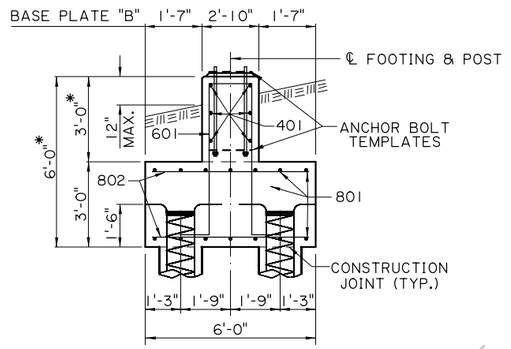

SECTION A-A

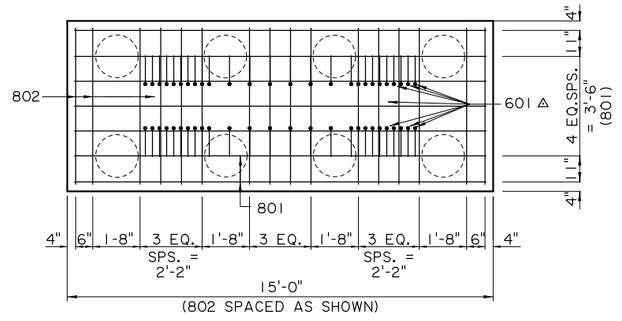

SECTION B-B

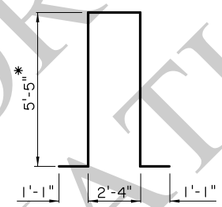

601
(4½"ø PIN)

DRILLED SHAFT FOOTING "B"
(OVERHEAD SIGN TRUSS)

ESTIMATED QUANTITIES (DRILLED SHAFT FOOTING "B")				
BAR	NO.	UNIT LENGTH	TOTAL LENGTH	LOCATION
801	14	14'-6"	203'-0"	FOOTING
802	32	5'-6"	176'-0"	FOOTING
TOTAL NO. 8 BARS = 379'-0"			=	1012 LBS.
601	32	15'-4"	490'-8"	STIRRUPS IN FOOTING & PED.
TOTAL NO. 6 BARS = 490'-8"			=	737 LBS.
401	6	9'-6"	57'-0"	PEDESTAL
TOTAL NO. 4 BARS = 57'-0"			=	38 LBS.
TOTAL DEFORMED REINFORCING STEEL			=	1787 LBS.
TOTAL CLASS A1 CONCRETE			=	13.15 CU.YDS.
STRUCTURAL EXCAVATION			=	45.0 CU.YDS.
STRUCTURAL STEEL			=	(SEE ANCHOR BOLT DETAILS)
⊖ DRILLED SHAFT			=	240 LIN. FT.

ESTIMATED QUANTITIES (ONE DRILLED SHAFT ; L = 30'-0") ⊖					
	BAR	NO.	UNIT LENGTH	TOTAL LENGTH	LOCATION
⊠	602	8	32'-2"	257'-4"	DRILLED SHAFT
	TOTAL NO. 6 BARS = 257'-4"			=	387 LBS.
⊗	301	1	206'-5"	206'-5"	SPIRAL
	TOTAL NO. 3 BARS = 206'-5"			=	78 LBS.
	TOTAL DEFORMED REINFORCING STEEL			=	465 LBS.
	TOTAL CLASS S CONCRETE			=	1.96 CU.YDS.

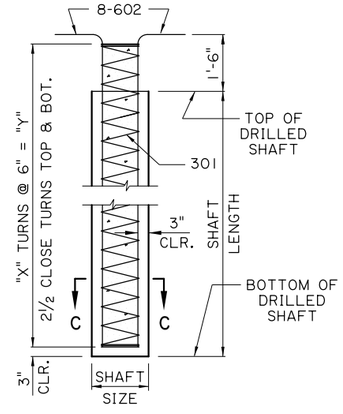

DRILLED SHAFT DETAIL

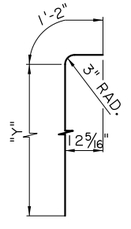

602⊠
(4½"ø PIN)

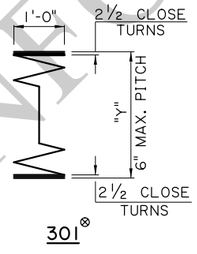

301⊗

DRILLED SHAFT DATA TABLE (FOOTING "B")				
WIND ZONE	SHAFT SIZE (IN.)	SHAFT LENGTH (FT.)	X	Y (FT.)
1	N/A			
2	18	30	62	31
3	18	65	132	66

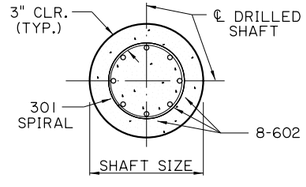

SECTION C-C

NOTES:

THIS DRILLED SHAFT ALTERNATE IS ALLOWED IN LIEU OF TIMBER PILES AND IS A SUPPLEMENT TO PLAN SHEET NO. 8 OF 15.

FOR ANCHOR BOLT DETAILS, SEE TYPE II TRUSS & CANTILEVER DETAILS AND THE GENERAL NOTES.

ANCHOR BOLTS SHALL BE FURNISHED IN A PREPOSITIONED ANCHOR BOLT ASSEMBLY. (TWO TEMPLATES REQUIRED)

* THESE DIMENSIONS MAY VARY ± ONE FOOT TO ADJUST ELEVATION FOR SITE ADJUST 401 & 601 BARS ACCORDINGLY.

△ NO. 601 BARS MAY BE MOVED TO CLEAR TRUSS ANCHOR BOLTS.

⊖ WIND ZONE 2 ASSUMED FOR SHAFT QUANTITIES. FOR OTHER WIND ZONES, ADJUST QUANTITIES ACCORDINGLY. SEE DRILLED SHAFT DATA TABLES.

⊠ IF A SPLICE IS REQUIRED, THE MINIMUM SPLICE LENGTH SHALL BE 2'-9".

⊗ IF A SPLICE IS REQUIRED, THE MINIMUM SPLICE LENGTH SHALL BE 1½ TURNS.

FOR INFORMATIONAL USE

SHEET NUMBER

PARISH | CONTROL SECTION | STATE PROJECT

DESIGN K. BRAUNER | DETAIL I.KOURILOVA | REVIEW C. GAUDRY | SERIES # 13 OF 15

CHECK C. PORTER | CHECK K. BRAUNER

APPROVED BY CHIEF ENGINEER: DATE: 8/25/2025

REVISION OR CHANGE ORDER DESCRIPTION | BY | DATE | NO.

STATE OF LOUISIANA DEPARTMENT OF TRANSPORTATION AND DEVELOPMENT

OVERHEAD TRAFFIC SIGNS

DRILLED SHAFT FOOTING ALT.

TS-OH

DOTD LOUISIANA DEPARTMENT OF TRANSPORTATION & DEVELOPMENT

STANDARD PLAN

IP_PWP:d1226841\BD.8.1.0.13 - Overhead Traffic Signs 13.dgn

14:1
8/21/2025

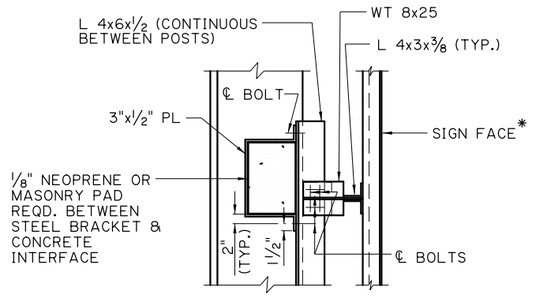

SECTION A-A

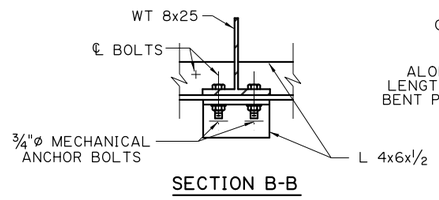

SECTION B-B

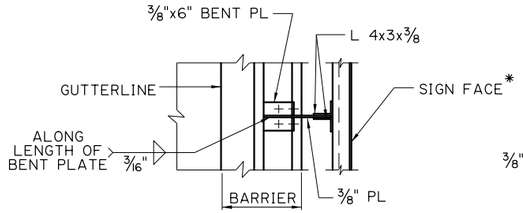

SECTION D-D

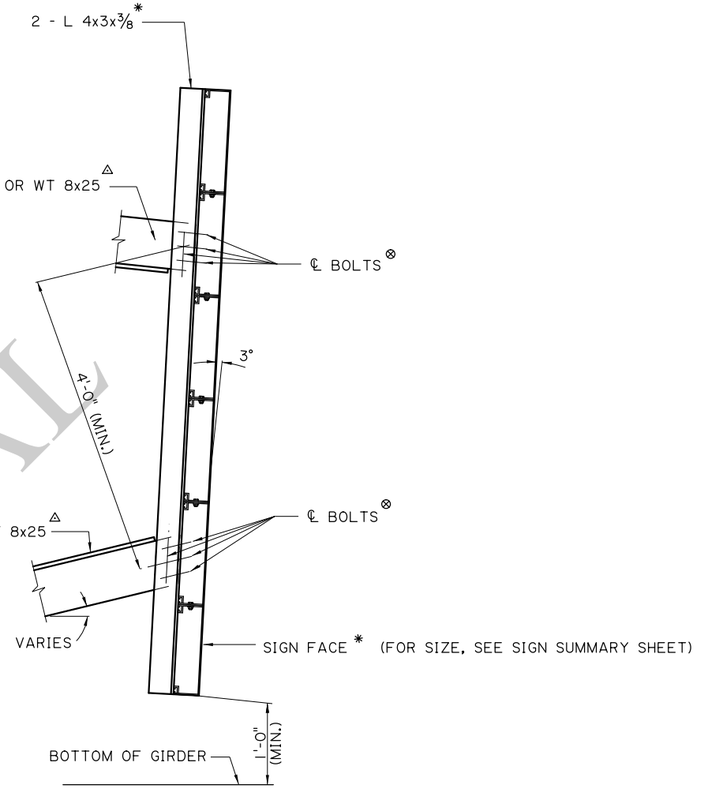

ELEVATION

SIGN CONNECTION DETAIL

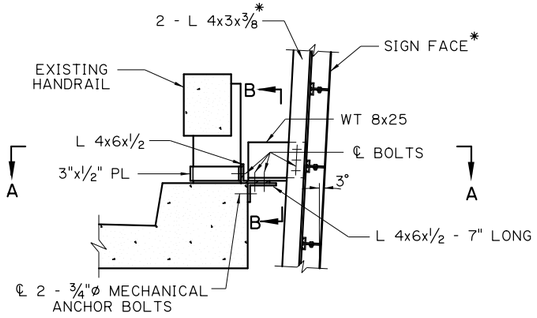

POST BRACKET

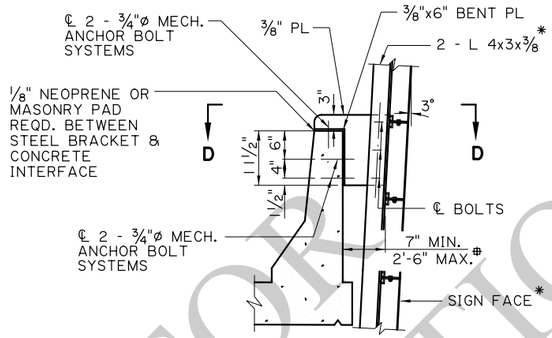

BARRIER RAIL BRACKET

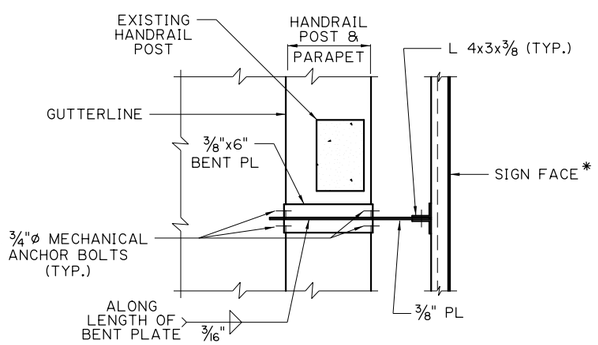

SECTION C-C

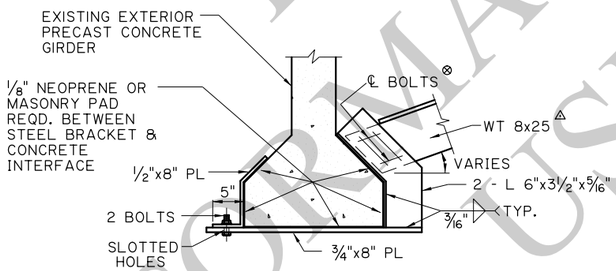

PRESTRESSED CONCRETE GIRDER BRACKET

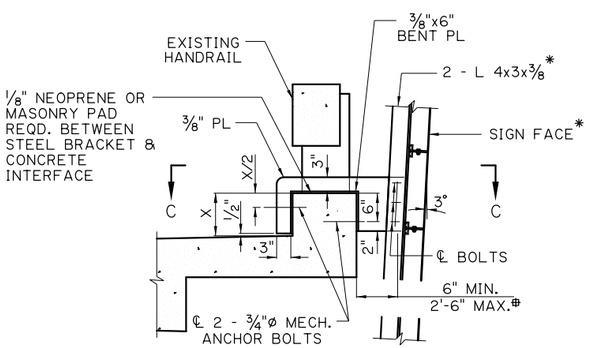

SIDEWALK BRACKET

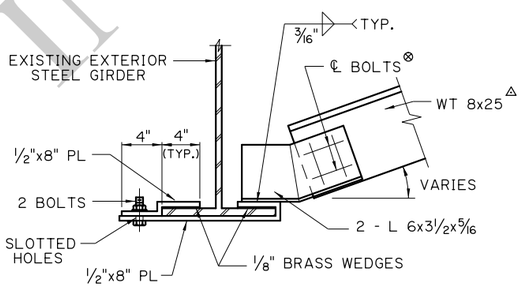

STEEL GIRDER BRACKET

NOTES:

THIS SHEET TO BE USED WITH WIND LOAD MAP AND GENERAL NOTES

ALL BRACKET MEMBERS SHALL BE STEEL (A-36), UNLESS OTHERWISE NOTED, BOLTS TO BE ¾" ASTM A-325 AND BE GALVANIZED. BOLTS SHALL HAVE TWO (2) FLAT WASHERS, ONE (1) LOCK WASHER & ONE (1) HEX NUT, ALL GALVANIZED.

DAMAGED GALVANIZED SURFACES SHALL BE REPAIRED IN ACCORDANCE WITH THE SPECIFICATIONS.

DIMENSIONS OF EXISTING BRIDGE MEMBERS TO BE OBTAINED IN FIELD PRIOR TO FABRICATION OF MOUNTING BRACKET BY THE CONTRACTOR AND ADJUSTED AS DIRECTED BY THE PROJECT ENGINEER.

NUMBER OF POST, CURB OR GIRDER BRACKETS REQUIRED SHALL BE DETERMINED IN THE FIELD (WITH TWO (2) EACH MIN.) FOR EACH SIGN LOCATION, AS DIRECTED BY THE PROJECT ENGINEER.

UNLESS OTHERWISE NOTED, PAYMENT SHALL BE MADE UNDER ITEM 729-13-00100 "SIGN SUPPORT (BRIDGE FASCIA MOUNTED)" PER EACH.

MECHANICAL ANCHOR SYSTEM SHALL BE FROM THE APPROVED MATERIALS LIST AND SHALL BE GALVANIZED.

* PAYMENT TO BE UNDER ITEM 729-06-00100.
⊗ SLOT ONE HOLE AND FIELD DRILL THE OTHERS
△ LENGTH VARIES.
⊕ WHEN DIMENSIONS EXCEED 2'-6", SEE SIDEWALK BARRIER RAIL BRACKET DETAIL, SHEET 15 OF 15.

FOR INFORMATIONAL USE

SHEET NUMBER

PARISH	CONTROL SECTION	STATE PROJECT

DESIGN	K. BRAUNER
CHECK	P. FOSSIER
DETAIL	I.KOURILOVA
CHECK	K. BRAUNER
REVIEW	C. GAUDRY
SERIES #	14 OF 15

APPROVED BY CHIEF ENGINEER: DATE: 8/25/2025

NO.	DATE	REVISION OR CHANGE ORDER DESCRIPTION	BY

STATE OF LOUISIANA

OVERHEAD TRAFFIC SIGNS

FASCIA MOUNTED BRACKETS (STEEL)

TS-OH

DOTD LOUISIANA DEPARTMENT OF TRANSPORTATION & DEVELOPMENT

STANDARD PLAN

IP_PWP:d1226841\BD.8.1.0.14 - Overhead Traffic Signs 14.dgn

14:1
8/21/2025
IP_PWP:d1226841\BD.8.1.0.15 - Overhead Traffic Signs 15.dgn

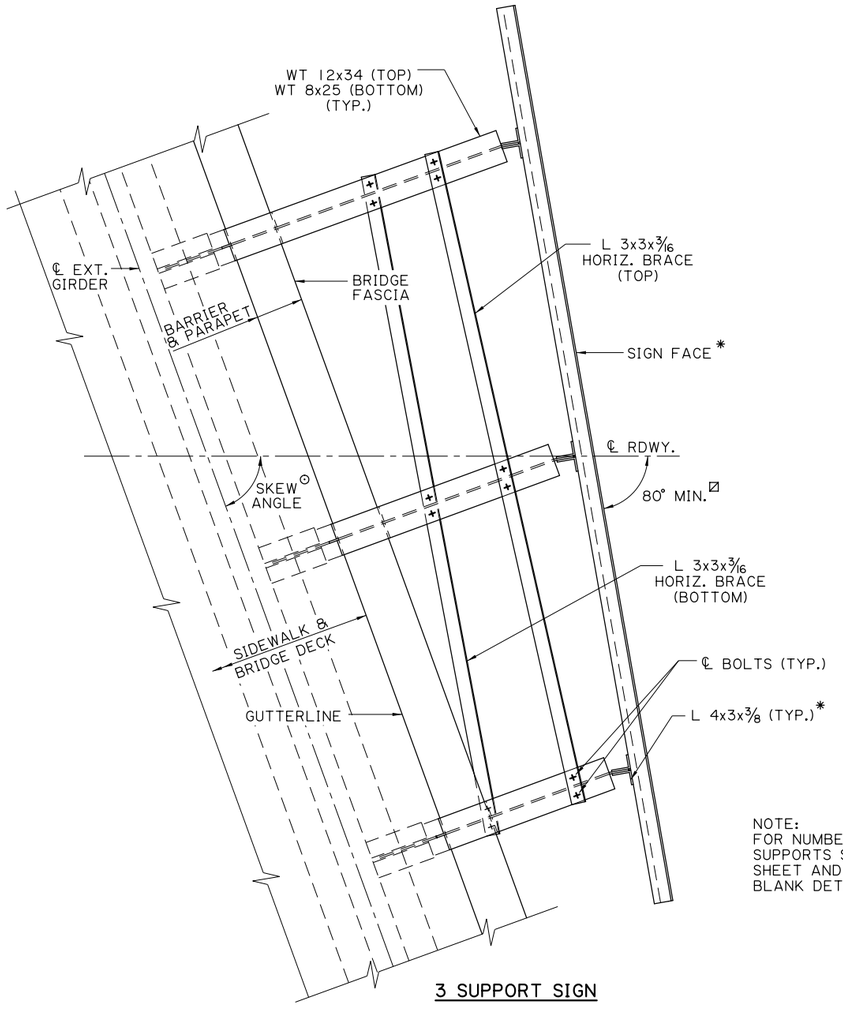

3 SUPPORT SIGN

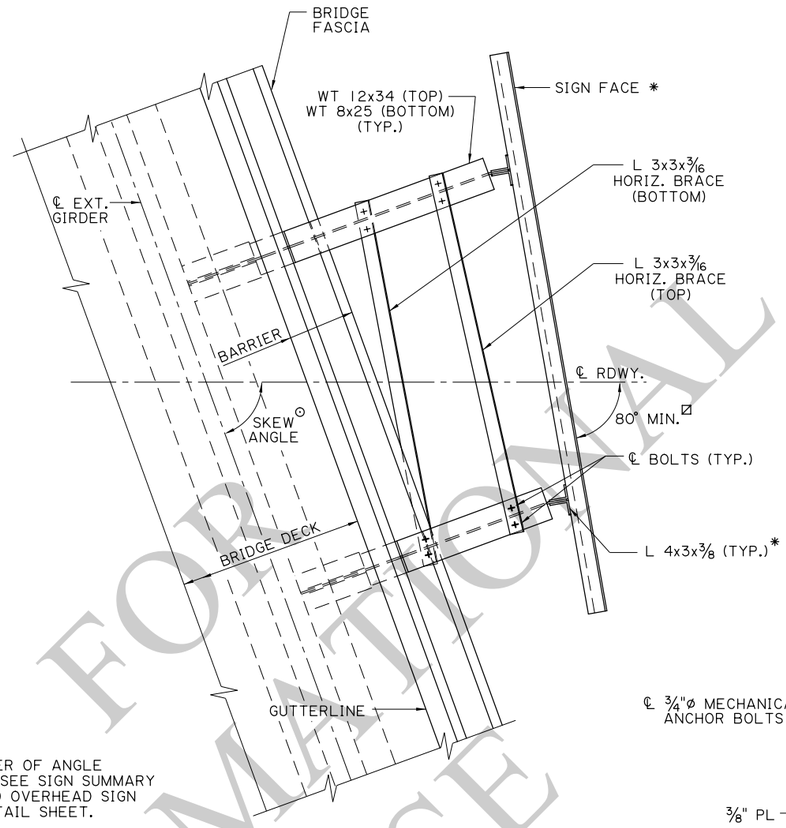

NOTE:
FOR NUMBER OF ANGLE SUPPORTS SEE SIGN SUMMARY SHEET AND OVERHEAD SIGN BLANK DETAIL SHEET.

2 SUPPORT SIGN

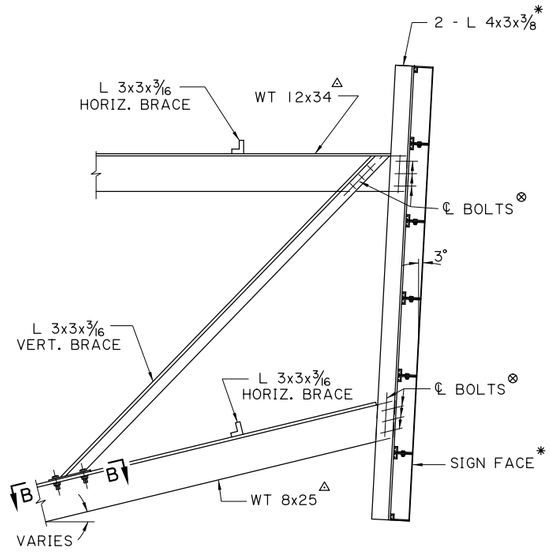

SIGN CONNECTION DETAIL

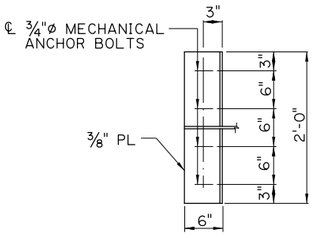

SECTION A-A

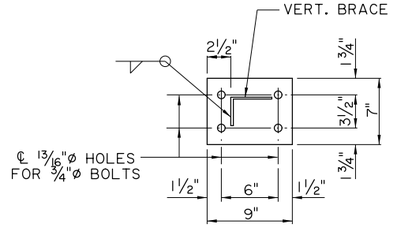

SECTION B-B

PLAN

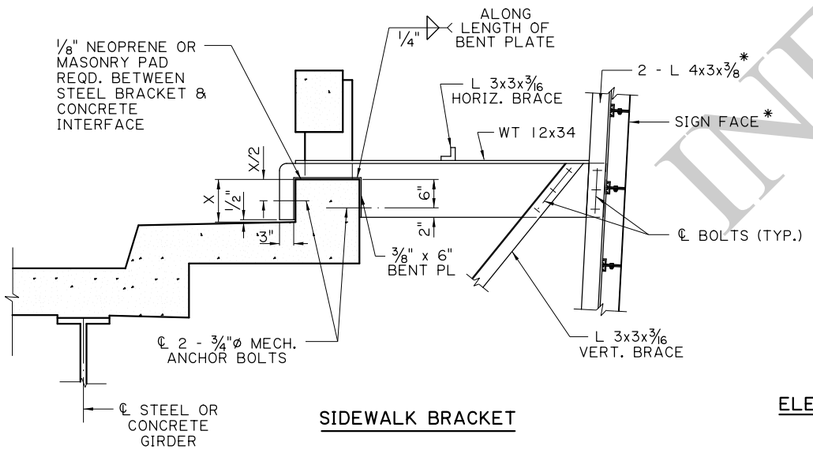

SIDEWALK BRACKET

ELEVATION

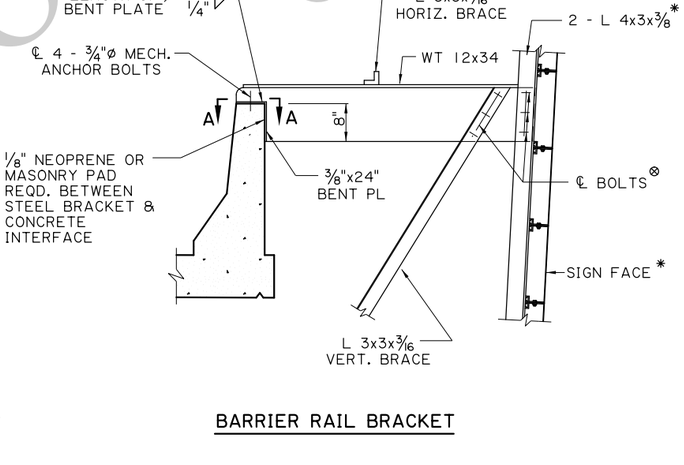

BARRIER RAIL BRACKET

NOTES:

THIS SHEET TO BE USED WITH WIND LOAD MAP AND GENERAL NOTE SHEET. ALL BRACKET MEMBERS SHALL BE STEEL (A36) AND GALVANIZED UNLESS OTHERWISE NOTED.

* PAYMENT TO BE UNDER ITEM 729-06-00100.
⊗ SLOT ONE HOLE AND FIELD DRILL THE OTHERS
△ LENGTH VARIES
⊙ 35° ≤ SKEW ANGLE ≤ 80°
☑ WHEN USED OVER A CURVED SECTION OF ROADWAY, THE ANGLE SHALL BE ADJUSTED TO PLACE SIGN PERPENDICULAR TO THE CURVE OR AS DIRECTED BY THE PROJECT ENGINEER.

LATERAL AND VERTICAL BRACING DETAILS

FOR INFORMATIONAL USE

SHEET NUMBER

PARISH	CONTROL SECTION	STATE PROJECT

DESIGN	K. BRAUNER	DETAIL	I.KOURILOVA	REVIEW	C. GAUDRY
CHECK	P. FOSSIER	CHECK	K. BRAUNER	SERIES #	15 OF 15

APPROVED BY CHIEF ENGINEER: DATE: 8/25/2025

NO.	DATE	REVISION OR CHANGE ORDER DESCRIPTION	BY

STATE OF LOUISIANA DEPARTMENT OF TRANSPORTATION AND DEVELOPMENT

OVERHEAD TRAFFIC SIGNS

FASCIA MOUNTED BRACKETS (STEEL)

TS-OH

DOTD LOUISIANA DEPARTMENT OF TRANSPORTATION & DEVELOPMENT

STANDARD PLAN

9/3/2025 15:17

1) CONDUCTORS/CABLES

A) ALL CONDUCTORS AND CABLES FROM SIGNAL HEADS AND DETECTORS SHALL BE RUN IN UNDERGROUND CONDUIT, RISERS, ON POLES, OR ON MESSENGER CABLE AND SHALL BE RUN IN THE MOST DIRECT ROUTE TO THE CONTROLLER CABINET IN ACCORDANCE WITH THE PLANS.

B) A SPARE LENGTH OF CABLE SHALL BE INSTALLED AS SHOWN ON LADOTD STANDARD DETAIL SHEETS LABELED "SPAN WIRE INSTALLATION DETAILS" AND "JUNCTION BOX AND PULL BOX". SIX FEET OF SPARE SIGNAL CABLE, LOOP LEAD-IN, COMMUNICATION, AND SERVICE CABLE, SHALL BE INSTALLED IN EACH BASE MOUNTED CABINET IN ACCORDANCE WITH LADOTD STANDARD SPECIFICATIONS FOR ROADS AND BRIDGES.

2) CONDUIT

A) ALL UNDERGROUND CONDUIT INCLUDING ELBOW SHALL BE HDPE OR PVC SCHEDULE 80.

B) USE AN E-LOC COUPLING WHEN CONNECTING HDPE TO PVC.

C) ALL ABOVE GROUND CONDUIT AND FITTINGS SHALL BE RIGID STEEL AND HOT DIP GALVANIZED ACCORDING TO ANSI C80.1.

D) SIGNAL CONDUIT SHALL BE INSTALLED AT A MINIMUM DEPTH OF 24".

E) FIBER OPTIC CONDUIT SHALL BE INSTALLED AT A MINIMUM DEPTH OF 36".

F) ALL CONDUIT SHALL BE INSTALLED AT THE DEPTHS LISTED ABOVE FOR DITCH INVERT.

G) ALL CONDUIT CONNECTIONS SHALL BE SEALED WITH A WATERPROOF SEALING COMPOUND.

H) ALL CABLE AND WIRE ENTRANCES SHALL BE DUCT SEALED IN CABINET AFTER INSTALLATION.

I) NO MORE THAN 270 DEGREES OF BENDS IN CONDUIT WITHOUT A JUNCTION BOX.

3) FOUNDATIONS

A) USE CLASS S CONCRETE WITH AN 8" SLUMP IN ACCORDANCE WITH SECTION 901.

4) FOUNDATION DISPOSAL

A) THE CONTRACTOR SHALL DISPOSE OF ALL EXISTING CONTROLLER AND POLE BASE FOUNDATIONS. POLE BASE FOUNDATIONS SHALL BE SHAVED 24" BELOW NATURAL GROUND AND BACK FILLED. REMOVAL OF FOUNDATIONS SHALL BE IN ACCORDANCE WITH SECTION 202 OF THE LADOTD STANDARD SPECIFICATIONS.

5) INTERSECTION SPECIFIC NOTES

A) SEE INDIVIDUAL INTERSECTION PLAN SHEETS.

6) JUNCTION BOXES

A) THE MAXIMUM DISTANCE BETWEEN SIGNAL JUNCTION BOXES SHALL BE 500 FEET.

B) THE MAXIMUM DISTANCE BETWEEN JUNCTION BOXES USED FOR COMMUNICATIONS CABLE SHALL BE 1000 FEET.

7) PROPERTY DAMAGE

A) ANY PROPERTY DAMAGED DURING CONSTRUCTION OPERATIONS SHALL BE THE CONTRACTORS RESPONSIBILITY.

8) POWER SERVICE

A) THE POWER SOURCE SHOWN ON THE DRAWINGS IS APPROXIMATE AND IT SHALL BE THE RESPONSIBILITY OF THE CONTRACTOR TO DETERMINE THE EXACT LOCATION OF THE POWER SOURCE.

B) THE CONTRACTOR SHALL MAKE ARRANGEMENTS WITH AND PAY THE POWER COMPANY FOR TEMPORARY AND PERMANENT ELECTRICAL SERVICE. THE CONTRACTOR SHALL VERIFY THE EXACT LOCATION AND POINTS OF ATTACHMENT BEFORE INSTALLATION IN ACCORDANCE WITH LADOTD STANDARD SPECIFICATIONS FOR ROADS AND BRIDGES.

C) FROM THE POWER DISCONNECT, A 1" CONDUIT WITH THREE #6 AWG-IC STRANDED COPPER, SHALL BE TURNED UP THE POWER COMPANY SERVICE POLE TO A HEIGHT DESIGNATED BY THE POWER COMPANY. THE CONTRACTOR SHALL TERMINATE THE CONDUIT WITH A THREADED SERVICE ENTRANCE FITTING (WEATHER HEAD) AND WIRES SHALL BE A MINIMUM OF 2 FEET BEYOND THE WEATHER HEAD TO ALLOW CONNECTION TO POWER COMPANY WIRING WITH A DRIP LOOP.

D) THE CONTRACTOR SHALL COORDINATE POWER SERVICE CONNECTION WITH UTILITY COMPANY.

9) POWER DISCONNECT

A) FROM THE POWER DISCONNECT TO THE CONTROLLER, A 2" CONDUIT WITH THREE #6 AWG-IC SHALL BE INSTALLED. MEASUREMENT FOR SIGNAL SERVICE PAYMENT WILL BE IN ACCORDANCE WITH SIGNAL SERVICE (PEDESTAL MOUNTED) FOR POWER DISCONNECT.

B) A POWER DISCONNECT MUST BE LOCATED WITHIN THE SAME QUADRANT AS THE SIGNAL CONTROLLER CABINET AND MUST BE ABLE TO BE ACCESSED SAFELY WITHOUT OBSTICLES BETWEEN THE DISCONNECT AND THE CONTROLLER. IF THIS CONDITION CANNOT BE MET, A SEPARATE SIGNAL SERVICE (PEDESTAL MOUNTED) POWER DISCONNECT SHALL BE PROVIDED AT THE CONTROLLER LOCATION FOR EMERGENCY POWER SHUT-OFF.

10) RIGHT-OF-WAY

A) THE CONTRACTOR SHALL BE RESPONSIBLE FOR VERIFYING THE STATE RIGHT-OF-WAY LIMITS AND MAINTAINING ALL CONSTRUCTION WITHIN THESE LIMITS.

11) SIGNAL CONTROLLER CABINET

A) THE CONTROLLER CABINET SHALL BE ORIENTED SUCH THAT SIGNAL PERSONNEL CAN FACE THE INTERSECTION WHEN OPENING THE CABINET. THE BACK OF THE CABINET SHALL PARALLEL THE MAIN ROADWAY.

B) A 3' X 5' X 4" CONCRETE PAD SHALL BE POURED IN FRONT OF CONTROLLER CABINET FOR A TYPICAL BASE MOUNTED CABINET FOUNDATION AND NEXT TO THE CONTROLLER CABINET POLE FOR POLE MOUNTED CABINETS, PAD SHALL BE INSTALLED ABOVE GROUND LEVEL TO PROVIDE AN ALL WEATHER STANDING AREA FOR SERVICE PERSONNEL.

12) SIGNAL DETECTORS – LOOPS

A) THE PROJECT ENGINEER SHALL APPROVE THE DEPTH AND CLEANLINESS OF EACH DETECTOR LOOP SLOT BEFORE THE CONTRACTOR PLACES WIRE IN THE SLOT.

B) SHIELDED CABLE SHALL BE SPLICED TO LOOP WIRE AT A PULL BOX NEAREST THE LOOP (OR LOCATION SPECIFICALLY DESIGNATED ON THE PLANS) AND SHALL BE CONTINUOUS TO THE TERMINATION PANEL IN THE CONTROLLER CABINET. NO SPLICE SHALL BE PERMITTED BETWEEN THE LOOP LEAD-IN AND THE TERMINATION PANEL.

C) LOOPS OPERATING ON THE SAME PHASE SHALL BE WIRED IN SERIES. A SINGLE LOOP LEAD-IN WIRE SHALL BE RAN FROM THE JUNCTION BOX TO THE CONTROLLER.

13) SIGNAL DETECTORS – VIDEO

A) ADJUST CAMERA IMAGE 10 FEET TO 15 FEET BEFORE STOP BAR TO ALLOW COUNT DETECTION TO BE PROGRAMMED AT A LATER DATE.

14) SIGNAL EQUIPMENT LOCATION

A) LOCATIONS OF POLES, SIGNALS, LOOP DETECTORS, SYSTEM SENSORS, CONTROLLERS AND JUNCTION BOXES ARE APPROXIMATE. EXACT LOCATIONS SHALL BE APPROVED BY THE PROJECT ENGINEER.

B) THE CONTRACTOR SHALL STAKE THE RIGHT-OF-WAY, EDGE OF THE PAVEMENT/CURB, LANE LINES, UTILITY MARKUP, AND ELEVATION & LOCATION OF EACH POLE FOUNDATION FOR THE PROJECT ENGINEER'S APPROVAL DURING THE ASSEMBLY PERIOD. ANY EXCEPTION HAS TO BE APPROVED BY THE PROJECT ENGINEER. AFTER APPROVAL THE CONTRACTOR MAY PROCEED WITH THE INSTALLATION OF THE POLE FOUNDATION.

C) ONCE THE POLE FOUNDATION IS INSTALLED, MAST ARM LENGTHS SPECIFIED ON PLANS ARE TO BE VERIFIED TO ORDER THE MATERIALS. IF A TIME EXTENSION IS NEEDED, IT SHALL BE AT THE DISCRETION OF THE PROJECT ENGINEER TO GRANT THE EXTENSION.

15) SIGNAL EQUIPMENT REMOVAL

A) ALL EXISTING TRAFFIC SIGNAL EQUIPMENT, CONTROL DEVICES, AND COMMUNICATIONS AT EACH INTERSECTION SHALL BE REMOVED AS SHOWN ON THE PLANS OR AS DIRECTED BY THE PROJECT ENGINEER.

B) THE CONTRACTOR SHALL DELIVER ALL SALVAGEABLE EQUIPMENT TO THE OWNER.

C) THE REMOVAL AND DELIVERY OF EQUIPMENT TO THE OWNER SHALL BE PAID FOR UNDER ITEM FOR "REMOVAL OF TRAFFIC SIGNAL EQUIPMENT".

16) SIGNAL POLE HEIGHT

A) THE CONTRACTOR SHALL PROVIDE HEIGHTS THAT ARE SUFFICIENT TO ENSURE THAT THE BOTTOM OF THE LOWEST SIGNAL ON AN ASSEMBLY IS NOT LESS THAN 17' ABOVE THE PAVEMENT. FOR MAXIMUM HEIGHT REFER TO THE CURRENT ADOPTED EDITION OF THE MUTCD.

B) SIGNAL HEAD ALIGNMENT AND CLEARANCE SHALL BE IN ACCORDANCE WITH THE LADOTD TRAFFIC SIGNAL DESIGN MANUAL.

17) SIGNAL POLE FINISH REPAIR

A) IF HOT-DIPPED GALVANIZED STEEL POLES ARE DAMAGED, THE DAMAGED GALVANIZED AREA SHALL BE REPAIRED BY THE CONTRACTOR IN ACCORDANCE WITH SUBSECTION 811.5 OF THE LADOTD STANDARD SPECIFICATIONS.

18) SIGNAL POLE ELECTRICAL CLEARANCES

A) THE CONTRACTOR IS RESPONSIBLE FOR MAINTAINING PROPER CLEARANCES FROM EXISTING UTILITY LINES AND LUMINARIES IN ACCORDANCE WITH THE NATIONAL ELECTRICAL SAFETY CODE.

19) TRAFFIC CONTROL – EXISTING SIGNALS

A) THE CONTRACTOR SHALL BE RESPONSIBLE FOR THE CONTINUAL OPERATION OF THE NEW, EXISTING, OR TEMPORARY TRAFFIC SIGNALS DURING THE PERIOD OF CONSTRUCTION. THIS INCLUDES RELOCATING POLES, DETECTORS, SIGNAL HEADS, AND OTHER ITEMS. PROVIDE TEMPORARY POLES OR OTHER MATERIALS AS NECESSARY TO ENSURE THE CONTINUAL OPERATION OF THE SIGNAL AND COMMUNICATION EQUIPMENT AT ALL TIMES. WHERE VEHICLE DETECTORS ARE PRESENT, VEHICLE DETECTION MUST BE MAINTAINED.

B) THE CHANGEOVER SHALL BE SCHEDULED DURING NON PEAK HOUR TRAFFIC CONDITIONS UNLESS DIRECTED OTHERWISE BY THE PROJECT ENGINEER, AS ADVISED BY THE OFFICE OF THE DISTRICT TRAFFIC OPERATIONS ENGINEER.

20) UTILITIES

A) UNDERGROUND UTILITIES MAY EXIST IN THE CONSTRUCTION AREAS. THE LOCATION AND TYPE IF SHOWN IS NOT GUARANTEED TO BE ACCURATE NOR ALL INCLUSIVE. THE INFORMATION IS SHOWN SOLELY FOR USE IN ESTABLISHING DESIGN CONTROLS FOR THE PROJECT. THE ENGINEER DOES NOT GUARANTEE ACCURACY OR GUARANTEE THAT ALL UTILITIES ARE SHOWN.

B) BEFORE ANY EXCAVATIONS, THE CONTRACTOR SHALL CONTACT "LOUISIANA ONE CALL", THE APPROPRIATE UTILITY COMPANY, AND LADOTD TRAFFIC OPERATIONS SECTION AT (225)935-0100 FOR LOCATION OF THE UNDERGROUND SERVICE A MINIMUM OF 48 HOURS PRIOR TO BEGINNING CONSTRUCTION. THE "LOUISIANA ONE CALL" NUMBER IS 1-800-272-3020.

C) THE CONTRACTOR SHALL BE RESPONSIBLE FOR DETERMINING THE EXACT LOCATION, DEPTH, AND SIZE OF ALL UNDERGROUND UTILITIES AND STRUCTURES AND SHALL BE LIABLE FOR ANY DAMAGES CAUSED BY FAILURE TO COMPLY WITH THESE INSTRUCTIONS. THE CONTRACTOR SHALL ALSO BE RESPONSIBLE FOR MAKING INDEPENDENT INVESTIGATIONS, INCLUDING ANY SUBSURFACE INVESTIGATIONS AS NECESSARY.

21) INSPECTION

A) CONTRACTOR SHALL BE REQUIRED TO CALL LADOTD TRAFFIC OPERATIONS SECTION AT (225)935-0100 AT LEAST 7 DAYS BEFORE BEGINNING CONSTRUCTION ACTIVITIES.

B) CONTRACTOR SHALL BE REQUIRED TO CALL LADOTD TRAFFIC OPERATIONS SECTION AT (225)935-0100 AT LEAST 7 DAYS BEFORE SIGNAL TURN ON TO SCHEDULE FOR A FINAL INSPECTION AND TO SCHEDULE FOR AN INSPECTOR TO BE PRESENT AT SIGNAL TURN ON.

22) COMMUNICATIONS – FIBER

A) ANY FIBER OPTIC CABLE INSTALLED SHALL BE REQUIRED TO HAVE A 10 AWG, GREEN, 600V COPPER CONDUCTOR, STRANDED OR OTHER APPLICABLE TRACER WIRE IN THE SAME CONDUIT. PAYMENT WILL BE MADE UNDER THE FIBER OPTIC CABLE PAY ITEM.

23) BRIDGE/RAILROAD PREEMPTION

A) INSTALL ONE 120VAC RELAY IN THE SIGNAL CABINET. THE RELAY IS ENERGIZED IN ABSENCE OF BRIDGE/RAILROAD PREEMPTION CALLS AND IS DE-ENERGIZED WHEN PREEMPTION CALLS ARE PRESENT. THE RELAY IS ACTIVATED BY THE CONTROL DESK SWITCH THAT CONTROLS BRIDGE FLASHERS OR THE RAILROAD CONTROL HOUSE SWITCH.

B) RUN A #14 TWO CONDUCTOR WIRE IN A MIN 1" PVC CONDUIT BETWEEN TRAFFIC SIGNAL CABINET TO THE DESIGNATED TERMINAL BLOCKS INSIDE THE RAILROAD HOUSE, BRIDGE CONTROL HOUSE OR THE MAIN BRIDGE JUNCTION BOX WHERE SPARE TERMINAL BLOCKS ARE AVAILABLE. 6' SPARE WIRE IS REQUIRED WHEN CONNECTION IS MADE AT THE JUNCTION BOX. 15' SPARE WIRE IS REQUIRED WHEN CONNECTION IS MADE INSIDE THE BRIDGE OR RAILROAD CONTROL HOUSE.

C) DESIGNERS SHALL VERIFY BRIDGE CONTROL CONNECTION LOCATIONS WITH LA DOTD BRIDGE ELECTRICAL SECTION.

D) DESIGNERS SHALL VERIFY TRACK CLEARANCE TIME AND BRIDGE PREEMPTION SEQUENCE WITH THE DISTRICT TRAFFIC OPERATIONS ENGINEER.

E) BRIDGE OR RAILROAD CONTROL HOUSE PROVIDES NORMALLY-CLOSED CONTACT CONNECTION.

FOR INFORMATIONAL USE

SHEET NUMBER

PARISH | CONTROL SECTION | STATE PROJECT

DESIGN S. MCCARROLL | DETAIL S. MCCARROLL | REVIEW | SERIES # 1 OF 14
CHECK D. LORIO | CHECK L. WANG

APPROVED BY CHIEF ENGINEER: DATE: Oct. 1, 2025

NO.	DATE	REVISION OR CHANGE ORDER DESCRIPTION	BY

STATE OF LOUISIANA

TRAFFIC SIGNAL DETAILS

SIGN NOTES

TSD-00

DOTD LOUISIANA DEPARTMENT OF TRANSPORTATION & DEVELOPMENT

STANDARD PLAN

9/3/2025 11:51

LEGEND:
ED - ELEVATION DIFFERENCE BETWEEN ROADWAY & GRADE AT POLE BASE
S - SAG AS ILLUSTRATED
SHH - SIGNAL HEAD HEIGHT + SPAN WIRE ATTACHMENT AND DISCONNECT HANGER
C - REQUIRED. CLEARANCE 17' OR AS SPECIFIED
PH - POLE HEIGHT

SPAN WIRE SIGNAL INSTALLATION

STEEL POLE INSTALLATION SHOWN. ALSO APPLIES TO WOOD POLE INSTALLATION.

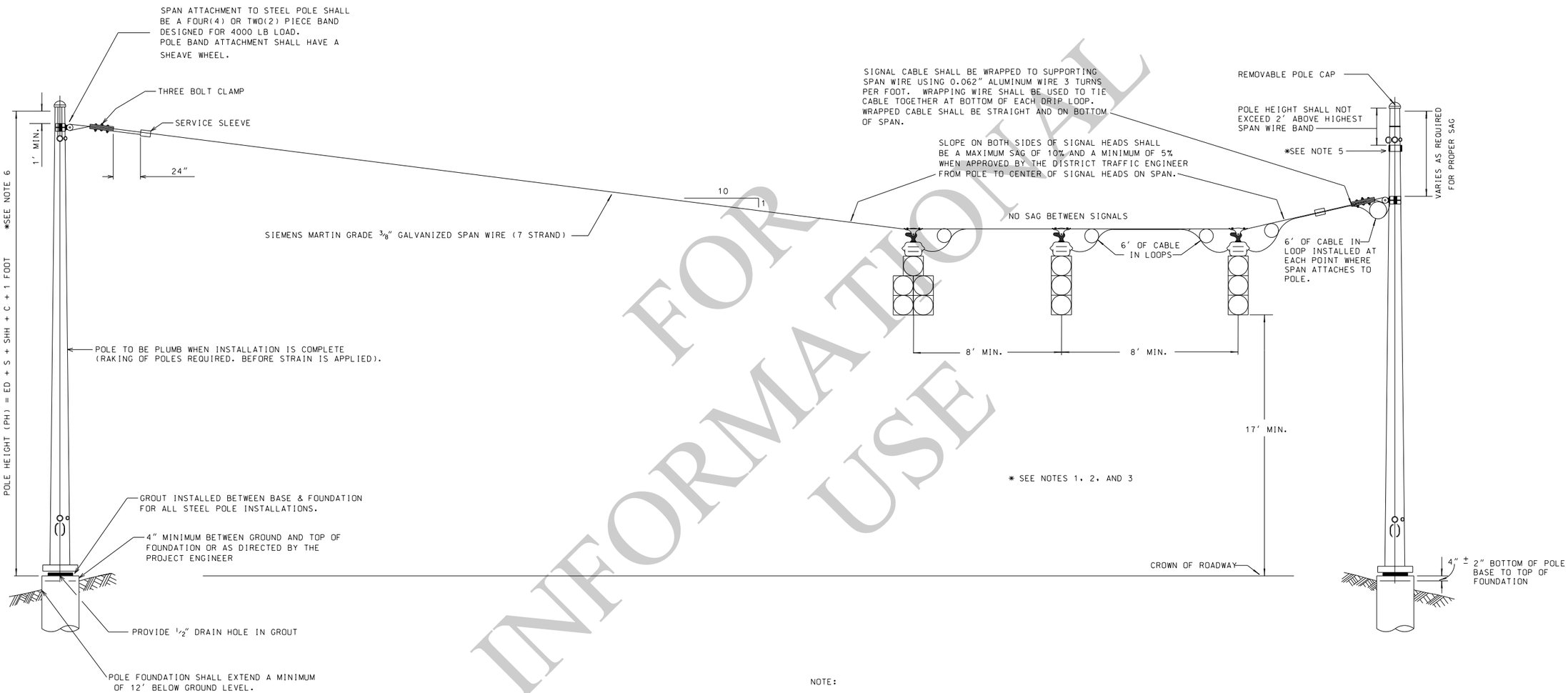

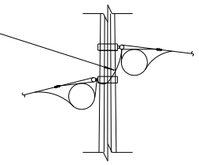

ATTACH SIGNAL CABLE TO SPAN ON BOTH SIDES OF LOOP.

FOR INFORMATIONAL USE

NOTE:

1. REFER TO THE PLANS FOR SIGNAL HEAD TYPE, NUMBER AND PLACEMENT.
2. ALL SIGNAL HEADS SHALL BE 17' MINIMUM HEIGHT. FOR MAXIMUM HEIGHT, REFER TO THE MUTCD CURRENT ADOPTED EDITION.
3. SIGNAL HEADS FOR PRIMARY MOVEMENT ON SPECIFIC APPROACH SHALL BE CENTERED OVER APPROACH. TURN LANE HEADS SHALL BE PLACED WITH ADEQUATE SPACING FROM LEFT MOST PRIMARY HEAD.
4. SIGNAL CABLE SHALL ENTER POLE BY WIRE WAY PROVIDED ON POLE. WEATHER HEAD SHALL BE SIZED ACCORDING TO THE NUMBER OF CABLES IN 3" BOSS PROVIDED WITH NECESSARY REDUCERS.
5. A SEPARATE POLE BAND MAY BE REQUIRED TO ATTACH PERPENDICULAR SPAN TO POLE MEETING THE REQUIREMENTS FOR SIGNAL HEIGHT AND SAG.
6. IN ALL CASES, THE MAXIMUM STRAIN POLE HEIGHT SHALL BE USED TO MEET THE 17' SIGNAL HEIGHT BEFORE ANY FOUNDATION ADJUSTMENTS ARE MADE. ADJUSTMENTS TO THE FOUNDATION MUST BE APPROVED BY THE PROJECT ENGINEER.

SHEET NUMBER

PARISH | CONTROL SECTION | STATE PROJECT

DESIGN S. MCCARROLL | DETAIL S. MCCARROLL | SERIES # 2 OF 14
CHECK D. LORIO | CHECK L. WANG | REVIEW

APPROVED BY CHIEF ENGINEER: DATE: Oct. 1, 2025

NO.	DATE	REVISION OR CHANGE ORDER DESCRIPTION	BY

STATE OF LOUISIANA DEPARTMENT OF TRANSPORTATION AND DEVELOPMENT

TRAFFIC SIGNAL DETAILS

SPAN WIRE INSTALLATION DETAILS

TSD-01

DOTD LOUISIANA DEPARTMENT OF TRANSPORTATION & DEVELOPMENT

STANDARD PLAN

50′ SINGLE, 45′X40′DUAL, AND UNDER MAST ARM, STEEL STRAIN POLE STANDARD

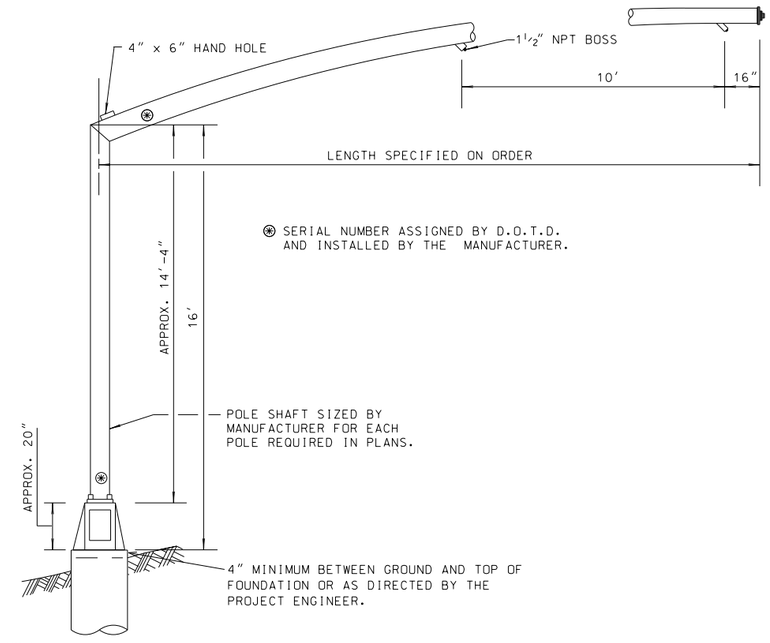

END OF ARM SHALL BE ELEVATED 5′ ABOVE TOP OF SHAFT AND PROVIDE A 21′ MINIMUM ELEVATION DIFFERENCE FROM THE BOTTOM OF TRANSFORMER BASE.

⊛ SERIAL NUMBER ASSIGNED BY D.O.T.D. AND INSTALLED BY THE MANUFACTURER.

NOTE:
1. ALL BOSSES SHALL BE PLUGGED WITH A 1½" GALVANIZED STEEL CONDUIT PLUG WITH A SQUARE HEAD HDG. WHEN CABLE IS ROUTED THROUGH THE BOSS A RUBBER COMPRESSION BUSHING SHALL BE USED TO SEAL AND HOLD CABLE IN BOSS. CABLE SHALL BE SECURED TO MAST ARM FROM BOSS TO SIGNAL HEAD WITH ½" WIDE WEATHER RESISTANT TIE WRAPS.
2. TEN (10) CONDUCTOR SIGNAL CABLE FROM CONTROLLER MAY BE SPLICED IN TRANSFORMER BASE TO TWO (2) - SIX (6) CONDUCTOR SIGNAL CABLES ROUTED TO TWO (2) - THREE (3)SECTION SIGNAL HEADS ON THE MAST ARM. NO OTHER SPLICING SHALL BE ALLOWED.
3. ALL SPLICES SHALL BE MADE WITH AN ALL COPPER OPEN-ENDED COMPRESSION SPLICE CAP INSTALLED TO THE MANUFACTURES RECOMMENDED METHOD AND INSULATED. (WIRE NUTS SHALL NOT BE ALLOWED)

BOSS AND END PLATE DETAIL

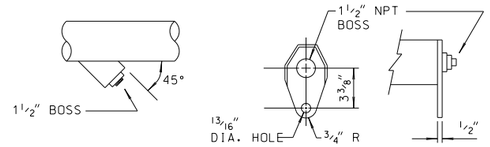

TRANSFORMER BASE DETAIL

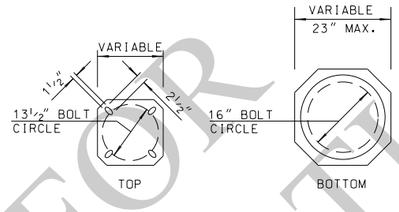

STEEL STRAIN POLE

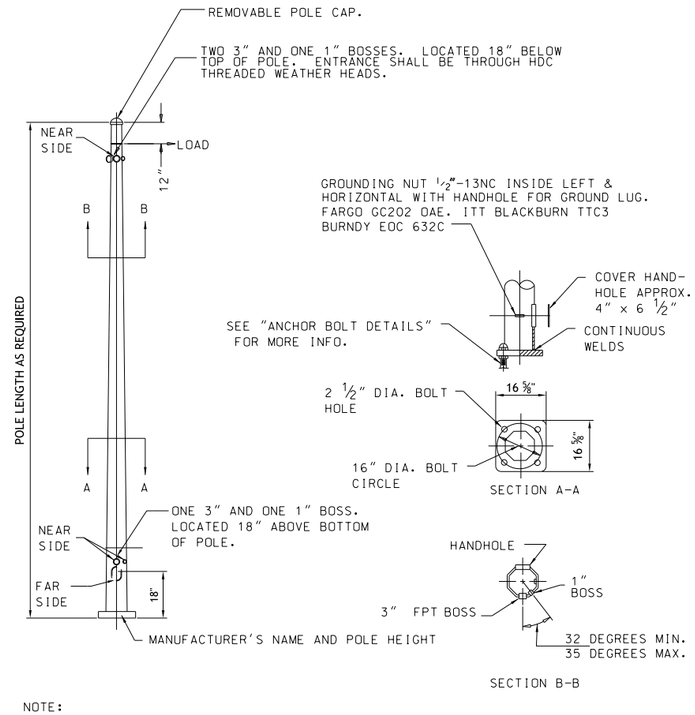

NOTE:
1. STEEL POLE BASEPLATES SHALL HAVE A 16" DIAMETER BOLT CIRCLE.
2. VENDORS SHALL BE AMERICAN INSTITUTE OF STEEL CONSTRUCTORS (AISC) CERTIFIED.

ROTATABLE BASE

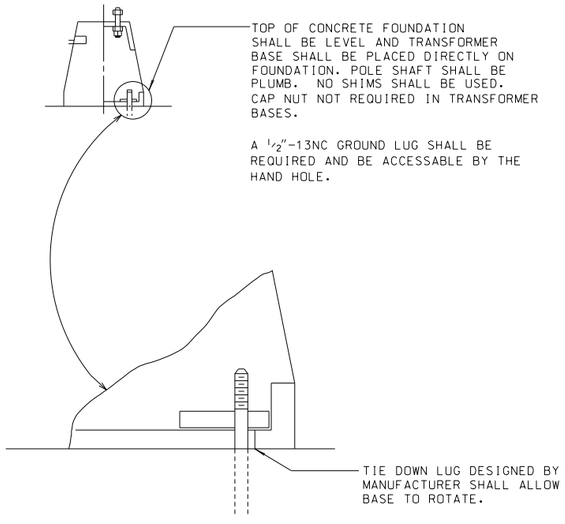

ANCHOR BOLT DETAILS FOR STRAIN POLES AND MAST ARMS

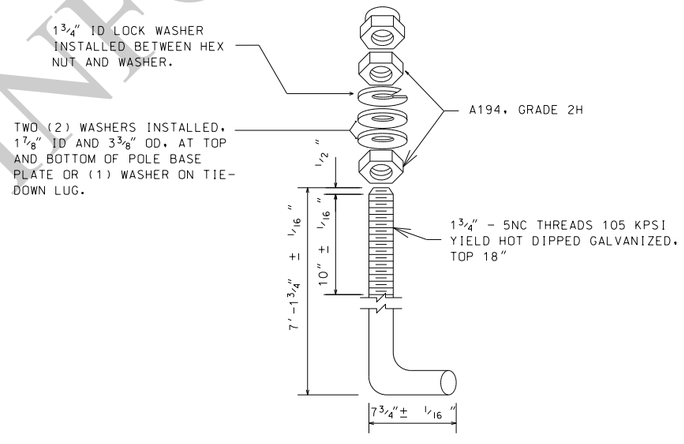

FOR INFORMATIONAL USE

SHEET NUMBER

PARISH | CONTROL SECTION | STATE PROJECT

DESIGN S. MCCARROLL | DETAIL S. MCCARROLL | SERIES # 3 OF 14
CHECK D. LORIO | CHECK L. WANG | REVIEW

APPROVED BY CHIEF ENGINEER: DATE: Oct. 1, 2025

NO.	DATE	REVISION OR CHANGE ORDER DESCRIPTION	BY

STATE OF LOUISIANA

TRAFFIC SIGNAL DETAILS

STRAIN POLE AND MAST ARMS 55' & UNDER

TSD-02

DOTD LOUISIANA DEPARTMENT OF TRANSPORTATION & DEVELOPMENT

STANDARD PLAN

9/3/2025 11:51

9/3/2025 11:5

SIGNAL PEDESTAL FOUNDATION

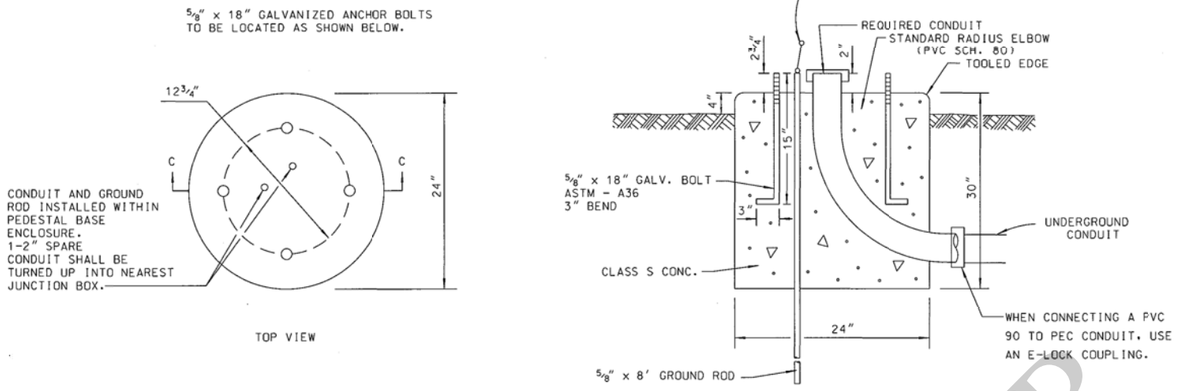

NOTES:

1. TRAFFIC SIGNAL ANCHOR BOLTS SHALL PROTRUDE 2 3/4" MIN. - 3" MAX. ABOVE FINISHED PEDESTAL FOUNDATION. CONDUIT AND GROUND RODS SHALL PROTRUDE 2" ABOVE FINISHED FOUNDATION.
2. BACKFILL OVER CONDUIT RUNS SHALL BE OF SOIL OR SAND AND SHALL NOT CONTAIN ROCKS OR CONCRETE.
3. ALL 90° ELLS TO BE STANDARD RADIUS.

CONDUIT ENTRANCE DETAIL TO EXISTING FOUNDATION

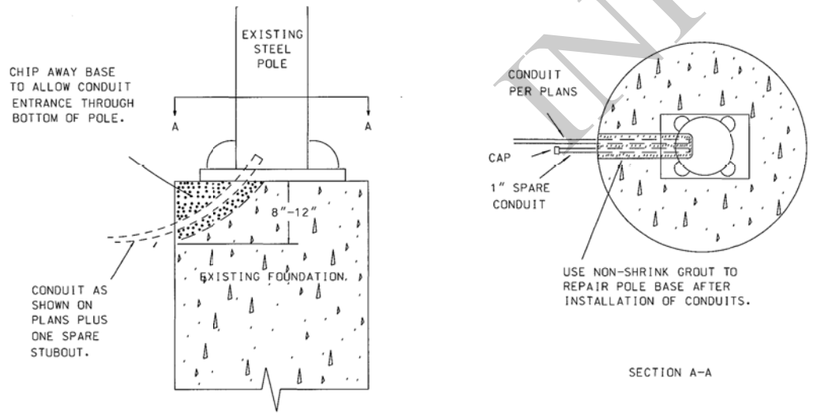

50' SINGLE, 45'X40' DUAL, AND UNDER MAST ARM, STEEL STRAIN POLE STANDARD

CONDUIT (NO. AND SIZE AS REQ'D. ON PLANS). PROVIDE ADDITIONAL 1-3" SPARE CONDUIT ON ALL FOUNDATIONS. TURN UP CONDIUT INTO NEAREST JUNCTION BOX.

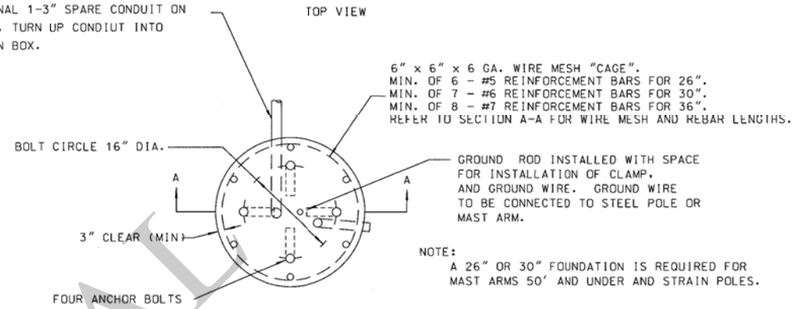

NOTE:
A 26" OR 30" FOUNDATION IS REQUIRED FOR MAST ARMS 50' AND UNDER AND STRAIN POLES.

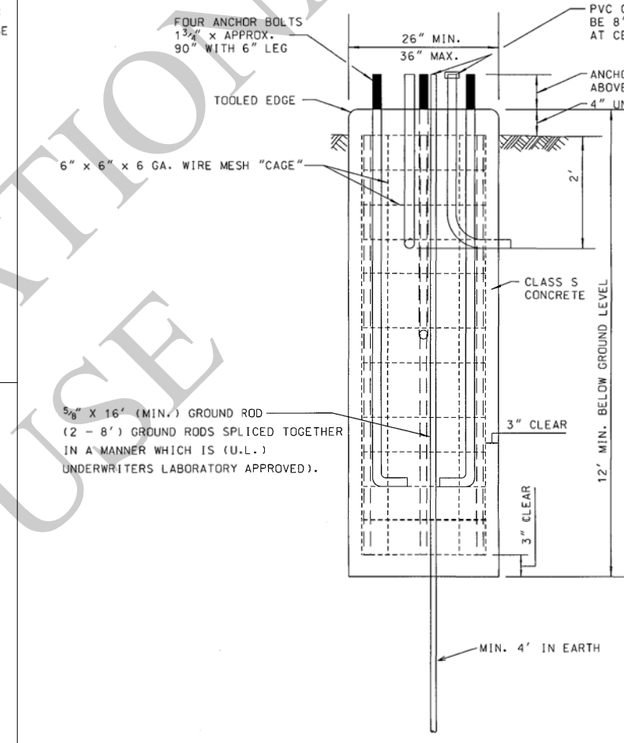

SECTION A-A

NOTES:

1. THE CONTRACTOR SHALL STAKE THE LOCATION OF EACH POLE FOUNDATION AND NOTIFY THE PROJECT ENGINEER FOR CONCURRENCE IN THE LOCATION BEFORE PROCEEDING WITH THE INSTALLATION OF THE POLE FOUNDATION.
2. ONCE THE POLE FOUNDATION IS INSTALLED, MAST ARM LENGTHS SPECIFIED ON PLANS ARE TO BE VERIFIED BEFORE ORDERING. IF A TIME EXTENSION IS NEEDED, IT SHALL BE AT THE DISCRETION OF THE PROJECT ENGINEER TO GRANT THE EXTENSION.
3. CONDUIT SHALL BE INSTALLED ACCORDING TO PLANS. CONDUIT SHALL BE CENTERED IN THE FOUNDATION WITH SPACING.
4. ALL SPARE CONDUIT IN FOUNDATIONS SHALL BE STUBBED OUT 24" BELOW GRADE ANDBROUGHT INTO JUNCTION BOX.
5. TOP OF BASE SHALL BE ROUND WITH CHAMFERED EDGE.
6. SERVICE CONDUIT SHALL BE 2" DIA. SCH. 80 PVC.
7. USE A GROUND ROD CLAMP TO ATTACH THE #6 AWG BARE GROUND WIRE ONTO THE GROUND ROD AND THE OTHER END TO BE CONNECTED TO THE POLE.
8. SEE SHEET TSD-02 FOR ANCHOR BOLT DETAIL.
9. ALL GROUND RODS, REGARDLESS OF FOUNDATION SIZE SHALL PROTRUDE THROUGH THE FOUNDATION AND A MINIMUM OF 4' SHALL BE EMBEDED INTO THE EARTH.

FOR INFORMATIONAL USE

SHEET NUMBER

PARISH	CONTROL SECTION	STATE PROJECT

DESIGN	S. MCCARROLL	DETAIL	S. MCCARROLL
CHECK	D. LORIO	CHECK	L. WANG
		REVIEW	SERIES # 4 OF 14

APPROVED BY CHIEF ENGINEER: DATE: Oct. 1, 2025

NO.	DATE	REVISION OR CHANGE ORDER DESCRIPTION	BY

STATE OF LOUISIANA DEPARTMENT OF TRANSPORTATION AND DEVELOPMENT

TRAFFIC SIGNAL DETAILS

POLE FOUNDATION

TSD-03

DOTD LOUISIANA DEPARTMENT OF TRANSPORTATION & DEVELOPMENT

STANDARD PLAN

9/3/2025 11:5

SIGNAL PEDESTAL FOUNDATION

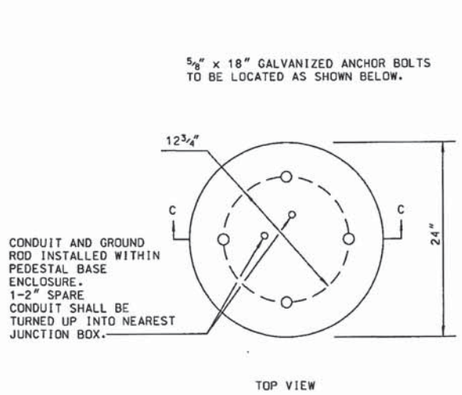

TOP VIEW

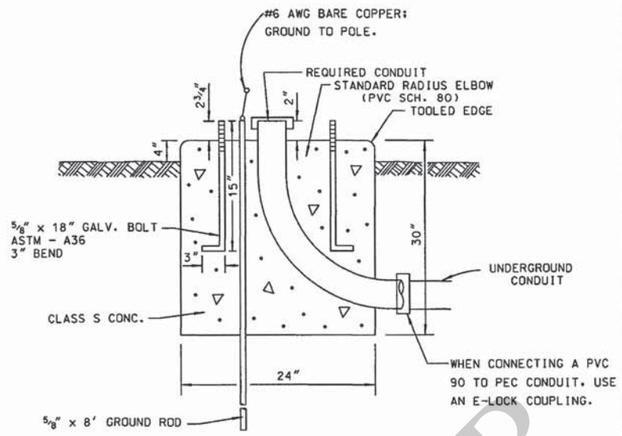

SECTION C-C

NOTES:

1. TRAFFIC SIGNAL ANCHOR BOLTS SHALL PROTRUDE 2 3/4" MIN. - 3" MAX. ABOVE FINISHED PEDESTAL FOUNDATION. CONDUIT AND GROUND RODS SHALL PROTRUDE 2" ABOVE FINISHED FOUNDATION.
2. BACKFILL OVER CONDUIT RUNS SHALL BE OF SOIL OR SAND AND SHALL NOT CONTAIN ROCKS OR CONCRETE.
3. ALL 90° ELLS TO BE STANDARD RADIUS.

CONDUIT ENTRANCE DETAIL TO EXISTING FOUNDATION

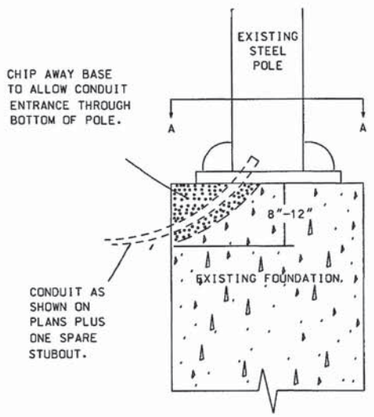

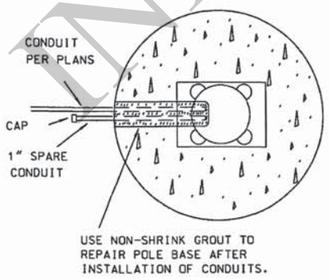

SECTION A-A

50' SINGLE, 45'X40' DUAL, AND UNDER MAST ARM, STEEL STRAIN POLE STANDARD

CONDUIT (NO. AND SIZE AS REQ'D. ON PLANS). PROVIDE ADDITIONAL 1-3" SPARE CONDUIT ON ALL FOUNDATIONS. TURN UP CONDIUT INTO NEAREST JUNCTION BOX.

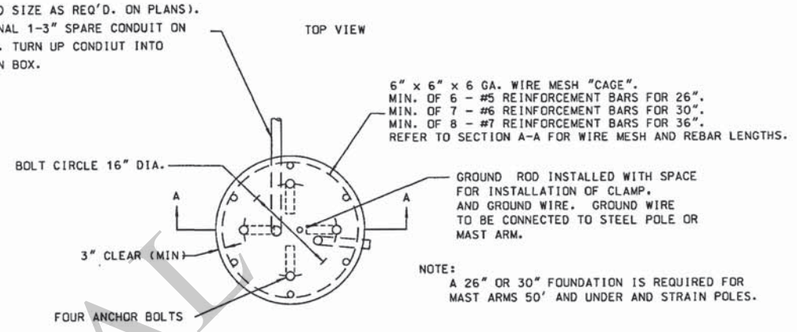

NOTE:
A 26" OR 30" FOUNDATION IS REQUIRED FOR MAST ARMS 50' AND UNDER AND STRAIN POLES.

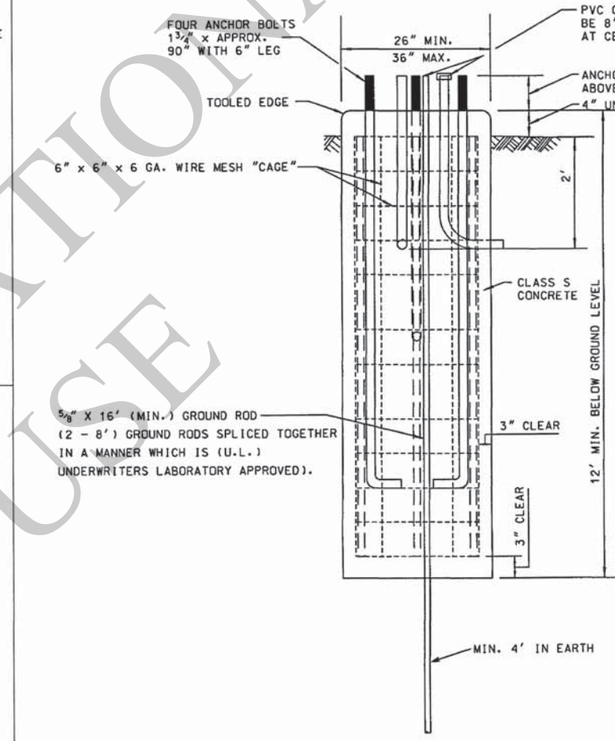

SECTION A-A

NOTES:

1. THE CONTRACTOR SHALL STAKE THE LOCATION OF EACH POLE FOUNDATION AND NOTIFY THE PROJECT ENGINEER FOR CONCURRENCE IN THE LOCATION BEFORE PROCEEDING WITH THE INSTALLATION OF THE POLE FOUNDATION.
2. ONCE THE POLE FOUNDATION IS INSTALLED, MAST ARM LENGTHS SPECIFIED ON PLANS ARE TO BE VERIFIED BEFORE ORDERING. IF A TIME EXTENSION IS NEEDED, IT SHALL BE AT THE DISCRETION OF THE PROJECT ENGINEER TO GRANT THE EXTENSION.
3. CONDUIT SHALL BE INSTALLED ACCORDING TO PLANS. CONDUIT SHALL BE CENTERED IN THE FOUNDATION WITH SPACING.
4. ALL SPARE CONDUIT IN FOUNDATIONS SHALL BE STUBBED OUT 24" BELOW GRADE ANDBROUGHT INTO JUNCTION BOX.
5. TOP OF BASE SHALL BE ROUND WITH CHAMFERED EDGE.
6. SERVICE CONDUIT SHALL BE 2" DIA. SCH. 80 PVC.
7. USE A GROUND ROD CLAMP TO ATTACH THE #6 AWG BARE GROUND WIRE ONTO THE GROUND ROD AND THE OTHER END TO BE CONNECTED TO THE POLE.
8. SEE SHEET TSD-02 FOR ANCHOR BOLT DETAIL.
9. ALL GROUND RODS, REGARDLESS OF FOUNDATION SIZE SHALL PROTRUDE THROUGH THE FOUNDATION AND A MINIMUM OF 4' SHALL BE EMBEDED INTO THE EARTH.

FOR INFORMATIONAL USE

SHEET NUMBER

PARISH	CONTROL SECTION	STATE PROJECT

DESIGN	S. MCCARROLL	DETAIL	S. MCCARROLL	REVIEW	SERIES # 4 OF 14
CHECK	D. LORIO	CHECK	L. WANG		

APPROVED BY CHIEF ENGINEER: DATE: 08/19/2025

NO.	DATE	REVISION OR CHANGE ORDER DESCRIPTION	BY

STATE OF LOUISIANA DEPARTMENT OF TRANSPORTATION AND DEVELOPMENT

TRAFFIC SIGNAL DETAILS

POLE FOUNDATION

TSD-03

DOTD LOUISIANA DEPARTMENT OF TRANSPORTATION & DEVELOPMENT

STANDARD PLAN

55′ SINGLE, 50′X35′ DUAL, AND OVER MAST ARM DETAIL

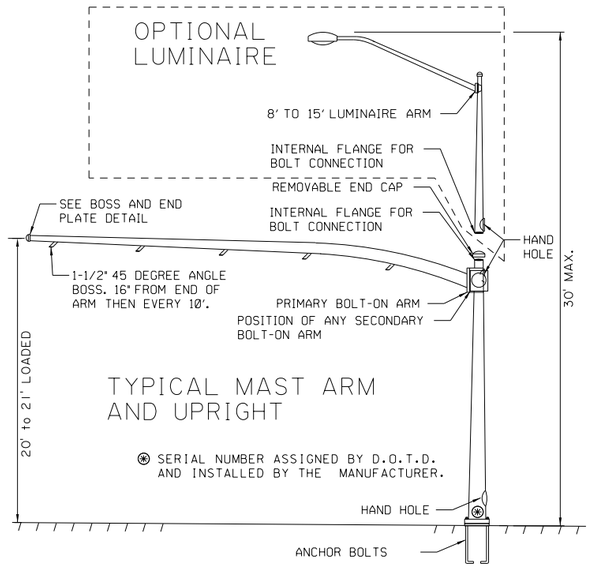

NOTE:

1. ALL BOSSES SHALL BE PLUGGED WITH A $1^{1}/_{2}$" GALVANIZED STEEL CONDUIT PLUG WITH A SQUARE HEAD HDG. WHEN CABLE IS ROUTED THROUGH THE BOSS A RUBBER COMPRESSION BUSHING SHALL BE USED TO SEAL AND HOLD CABLE IN BOSS. CABLE SHALL BE SECURED TO MAST ARM FROM BOSS TO SIGNAL HEAD WITH $^{1}/_{2}$" WIDE WEATHER RESISTANT TIE WRAPS.
2. TEN (10) CONDUCTOR SIGNAL CABLE FROM CONTROLLER MAY BE SPLICED IN POLE BASE TO TWO (2) - SIX (6) CONDUCTOR SIGNAL CABLES ROUTED TO TWO (2) - THREE (3)SECTION SIGNAL HEADS ON THE MAST ARM. NO OTHER SPLICING SHALL BE ALLOWED.
3. ALL SPLICES SHALL BE MADE WITH AN ALL COPPER OPEN-ENDED COMPRESSION SPLICE CAP INSTALLED TO THE MANUFACTURES RECOMMENDED METHOD AND INSULATED. (WIRE NUTS SHALL NOT BE ALLOWED)
4. A 1/2 "-13NC GROUND LUG SHALL BE REQUIRED AND BE ACCESSABLE BY THE HAND HOLE.

DUAL ARM (BOLT-ON)

SECONDARY ARM SHALL BE AT THE SAME MOUNTING HEIGHT AS THE PRIMARY BOLT-ON ARM AT THE OUTER TIP

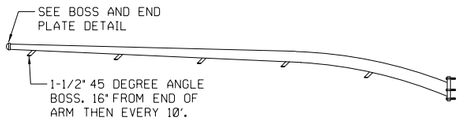

BOSS AND END PLATE DETAIL

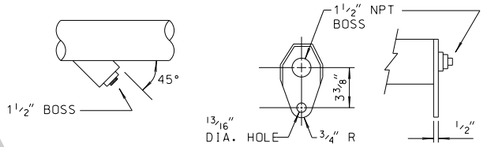

LOADING TREE

55′ AND OVER

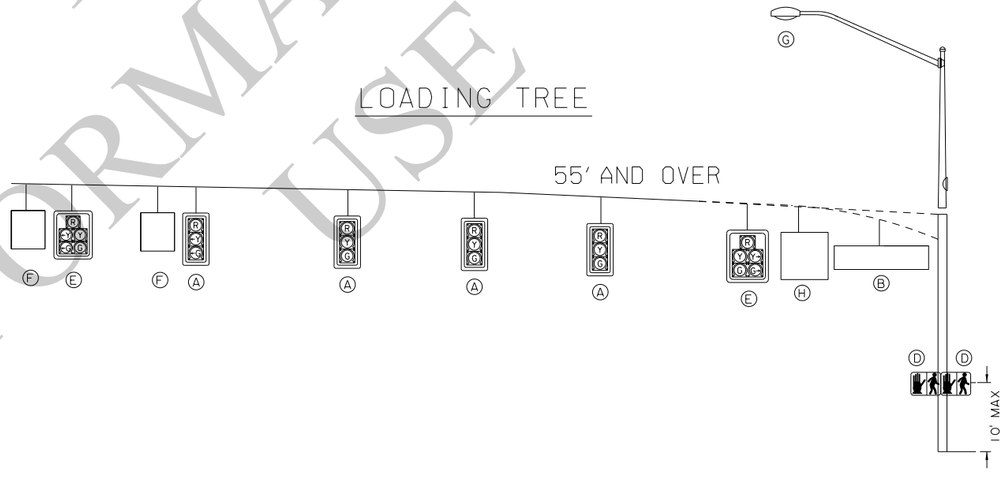

MAST ARM DESIGN CRITERIA:
THESE TRAFFIC SIGNAL SUPPORT STRUCTURES SHALL BE DESIGNED IN ACCORDANCE WITH LOADING AND ALLOWABLE STRESS REQUIREMENTS OF 2009 AASHTO "STANDARDS SPECIFICATION FOR STRUCTURAL SUPPORTS FOR HIGHWAY SIGNS, LUMINAIRES AND TRAFFIC SIGNALS", FOURTH EDITION. WIND LOADS ARE BASED ON A BASIC WIND SPEED OF 130 MPH WITH A RECURRENCE INTERVAL OF 50 YEARS AND A FATIGUE CATAGORY OF 2. FATIGUE LOADS ARE BASED ON THE REQUIREMENTS OF SECTION 11.7 AND THE FOLLOWING DESIGN LOADS.

- ✱ VORTEX SHEDDING: NOT APPLICABLE FOR STRUCTURES WITH A TAPER OF AT LEAST 0.14"/FT. PER AASHTO.
- ✱ NATURAL WIND GUSTS: THE YEARLY MEAN WIND SPEED FOR NATURAL WIND GUSTS WILL BE ASSUMED TO BE 11.2 MPH.
- ✱ GALLOPING: STRUCTURES ARE NOT DESIGNED TO RESIST PERIODIC GALLOPING FORCES.
- ✱ TRUCK-INDUCED GUST: STRUCTURES ARE NOT DESIGNED TO INCLUDE TRUCK-INDUCED GUSTS.
- ✱ ARMS MAY BE CURVED OR STRAIGHT.

NOTE:
(I) EFFECTIVE PROJECTED AREA

DEVICE	DESCRIPTION	PROJ AREA (SQ. FT)	WEIGHT (LBS)
(A) SIGNAL	12"-3 SEC. SIGNAL W/BACKPLATES	10.40 (I)	56
(B) SIGN	72" X 18" STREET NAME SIGN	9.00	36
(C) SIGNAL	12"-3 SEC SIGNAL HEAD NO BACKPLATE	4.90 (I)	50
(D) SIGNAL	DUAL 2 SECTION PEDESTRIAN SIGNAL	8.00 (I)	80
(E) SIGNAL	12"-5 SEC SIGNAL WITH BACKPLATES	16.00 (I)	85
(F) SIGN	24" X 30" REGULATORY SIGN	5.00	20
(G) LUMINAIRE	LUMINAIRE	3.30	75
(H) SIGN	36" X 36" BLANK OUT REGULATORY SIGN (40" X 40" OVERALL)	11.20	94
(I) SIGN	30" X 36" REGULATORY SIGN	7.50	30

FOR INFORMATIONAL USE

SHEET NUMBER

PARISH | CONTROL SECTION | STATE PROJECT

DESIGN S. MCCARROLL | DETAIL S. MCCARROLL | SERIES # 5 OF 14
CHECK D. LORIO | CHECK L. WANG | REVIEW

APPROVED BY CHIEF ENGINEER: DATE: Oct. 1, 2025

NO. | DATE | REVISION OR CHANGE ORDER DESCRIPTION | BY

STATE OF LOUISIANA

TRAFFIC SIGNAL DETAILS
55' SINGLE, 50'X35' DUAL, AND OVER MAST ARM

TSD-04

DOTD LOUISIANA DEPARTMENT OF TRANSPORTATION & DEVELOPMENT

STANDARD PLAN

9/3/2025 11:5:

9/3/2025 11:5

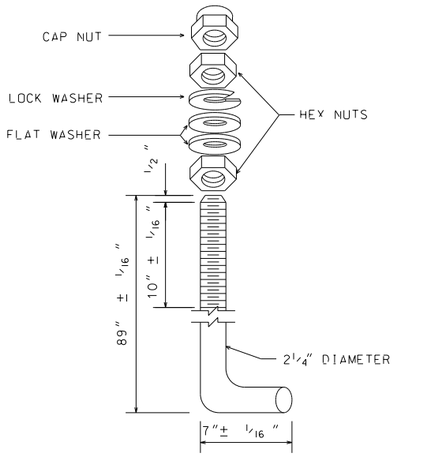

ASTM 1554, 55KSI, 89" WITH 7" BENT HOOK

ANCHOR BOLT ASSEMBLY

NOT TO SCALE

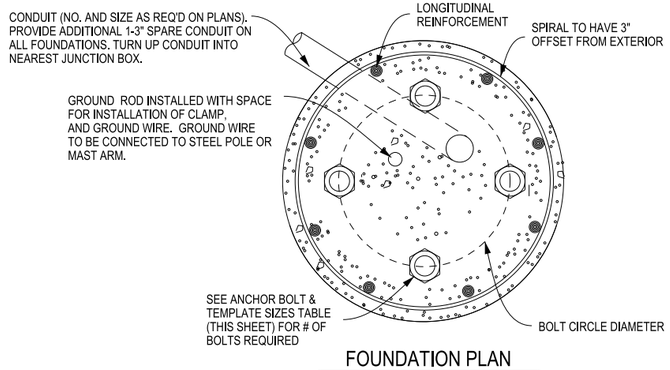

FOUNDATION PLAN

NOT TO SCALE

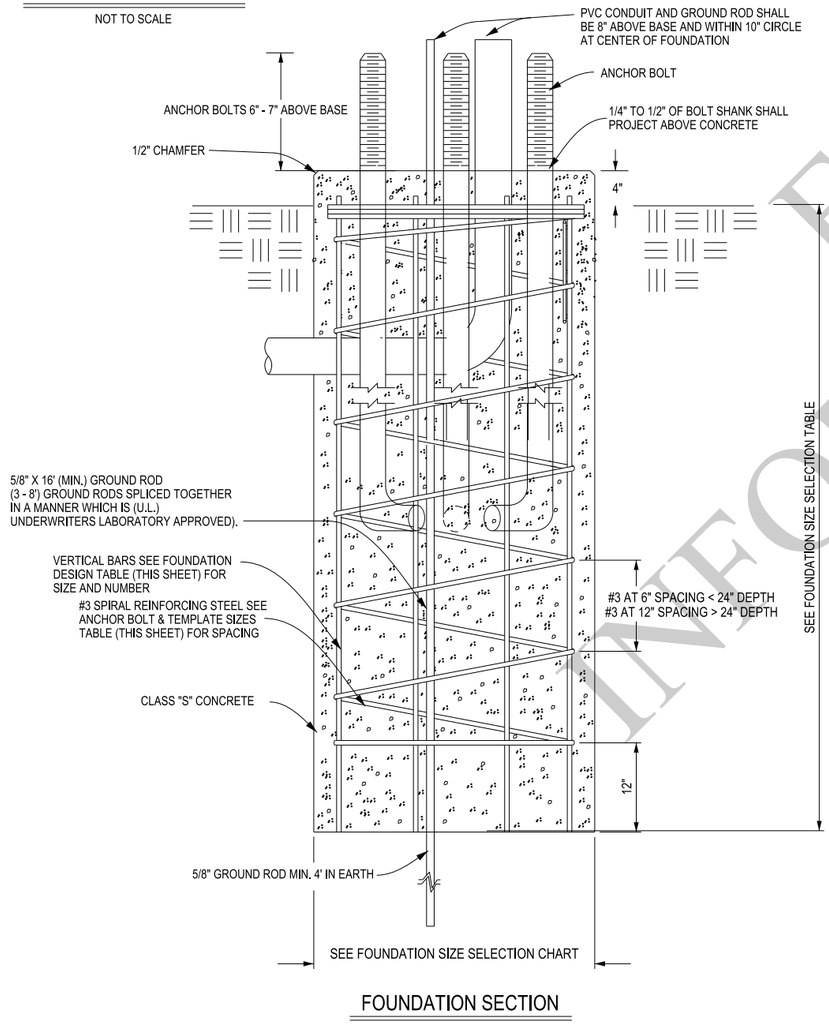

FOUNDATION SECTION

NOT TO SCALE

FOUNDATION SIZE SELECTION TABLE

Mast Arm Length(s) (ft)	Bending Moment (ft-lb)	Torsion (ft-lb)	Shear (lb)	Axial Force (lb)	Foundation Size Selection (diameter in inches, depth in feet)							
					Zone 1 (Diameter/Depth)		Zone 2+ (Diameter/Depth)		Zone 3+ (Diameter/Depth)		Zone 4 (Diameter/Depth)	
55	125,120	121,100	5,500	5,862	*	*	42	18	36	14	*	*
60	141,805	128,940	5,930	6,561	*	*	42	19	36	15	*	*
65	161,259	150,480	6,130	6,965	*	*	48	17	36	16	*	*
70	182,103	169,590	6,620	7,377	*	*	48	19	36	17	*	*
50 & 35	142,210	101,630	5,860	7,572	54	18	36	20	36	13	*	*
50 & 40	147,540	101,610	5,860	7,798	54	18	36	20	36	13	*	*
55 & 40	159,408	119,900	5,910	8,195	*	*	42	18	36	14	*	*
55 & 45	165,981	119,870	5,910	8,425	*	*	42	18	36	14	*	*

*: Special Design Foundation Required

ANCHOR BOLT & TEMPLATE SIZE TABLE

DRILLED SHAFT DIA	REINFORCING STEEL		ANCHOR BOLT DESIGN		
	VERT BARS	SPIRAL SPACING	# OF ANCHOR BOLTS	ANCHOR BOLT DIA	BOLT CIRCLE DIA
36"	12 - #10	#3 AT 6" < 24" DEPTH #3 AT 12" > 24" DEPTH	4	2 1/4"	24"
42"	17 - #10	#3 AT 6" < 24" DEPTH #3 AT 12" > 24" DEPTH	6	2 1/4"	30"
48"	22 - #10	#3 AT 6" < 24" DEPTH #3 AT 12" > 24" DEPTH	6	2 1/4"	30"
54"	28 - #10	#3 AT 6" < 24" DEPTH #3 AT 12" > 24" DEPTH	6	2 1/4"	30"

GENERAL NOTES:

1. THREADS FOR ANCHOR BOLTS AND NUTS SHALL BE ROLLED OR CUT THREADS .
2. THE CONTRACTOR SHALL STAKE THE LOCATION OF EACH POLE FOUNDATION AND NOTIFY THE PROJECT ENGINEER FOR CONCURRENCE IN THE LOCATION BEFORE PROCEEDING WITH THE INSTALLATION OF THE POLE FOUNDATION.
3. ONCE THE POLE FOUNDATION IS INSTALLED, MAST ARM LENGTHS SPECIFIED ON PLANS ARE TO BE VERIFIED BEFORE ORDERING. IF A TIME EXTENSION IS NEEDED, IT SHALL BE AT THE DISCRETION OF THE PROJECT ENGINEER TO GRANT THE EXTENSION.
4. CONDUIT SHALL BE INSTALLED ACCORDING TO PLANS. CONDUIT SHALL BE CENTERED IN THE FOUNDATION WITH EVEN SPACING.
5. ALL SPARE CONDUIT IN FOUNDATIONS SHALL BE STUBBED OUT 24" BELOW GRADE AND BROUGHT INTO JUNCTION BOX.
6. TOP OF BASE SHALL BE ROUND WITH CHAMFERED EDGE.
7. SERVICE CONDUIT SHALL BE 2" DIA. SCH. 80 PVC.
8. USE A GROUND ROD CLAMP TO ATTACH THE #6 AWG BARE GROUND WIRE ONTO THE GROUND ROD AND THE OTHER END TO BE CONNECTED TO THE POLE.
9. ALL GROUND RODS, REGARDLESS OF FOUNDATION SIZE SHALL PROTRUDE THROUGH THE FOUNDATION AND A MINIMUM OF 4' SHALL BE EMBEDED INTO THE EARTH.

SPECIAL DESIGN FOUNDATION NOTES:

SPECIAL DESIGN FOUNDATION NOTES

1. FOUNDATIONS FOR MAST ARM LENGTHS REQUIRING A SPECIAL DESIGN FOUNDATION SHALL BE DESIGNED IN ACCORDANCE WITH THE LATEST EDITION OF THE AASTHO LRFD BRIDGE DESIGN SPECIFICATIONS.
2. FOUNDATION LOADS FOR THE CORRESPONDING MAST ARM LENGTH PROVIDED IN THE FOUNDATION SIZE SELECTION TABLE SHALL BE USED TO DESIGN THE FOUNDATION SIZE AND DEPTH. THE LOADS IN THE TABLE WERE PROVIDED BY THE MAST ARM MANUFACTURERS AND ARE BASED ON A 25-YEAR RECURRENCE INTERVAL AND A WIND SPEED OF 110 MPH. THESE LOADS SHALL ONLY BE USED FOR DESIGN OF THE FOUNDATION.
3. WHEN A SPECIAL DESIGN FOUNDATION IS REQUIRED THE FOUNDATION DESIGN SHALL BE BASED ON SITE SPECIFIC SUBSURFACE INFORMATION. IF SITE SPECIFIC DATA IS NOT MADE AVAILABLE BY DOTD THE DESIGNER SHALL BE RESPONSIBLE FOR OBTAINING SITE SPECIFIC SUBSURFACE INFORMATION.
4. DESIGN CALCULATIONS FOR THE FOUNDATION SHALL BE SUBMITTED TO THE TRAFFIC ENGINEERING SECTION FOR REVIEW.

FOR INFORMATIONAL USE

SHEET NUMBER

PARISH | CONTROL SECTION | STATE PROJECT

DESIGN S. MCCARROLL
CHECK D. LORIO
DETAIL S. MCCARROLL
CHECK L. WANG
REVIEW
SERIES # 6 OF 14

APPROVED BY CHIEF ENGINEER:
DATE: Oct. 1, 2025

NO.	DATE	REVISION OR CHANGE ORDER DESCRIPTION	BY

STATE OF LOUISIANA DEPARTMENT OF TRANSPORTATION AND DEVELOPMENT

TRAFFIC SIGNAL DETAILS

55' SINGLE 50'x35' DUAL AND OVER MAST ARM

TSD-05

DOTD LOUISIANA DEPARTMENT OF TRANSPORTATION & DEVELOPMENT

STANDARD PLAN

9/3/2025 11:5

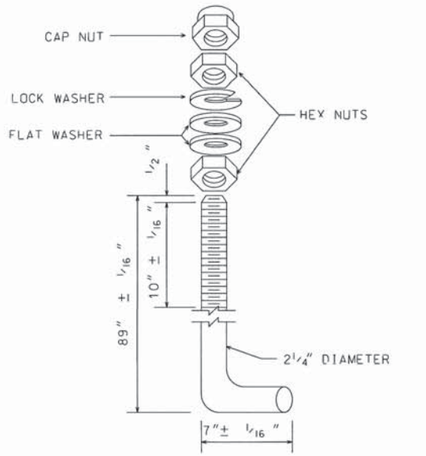

ASTM 1554, 55KSI, 89" WITH 7" BENT HOOK

ANCHOR BOLT ASSEMBLY

NOT TO SCALE

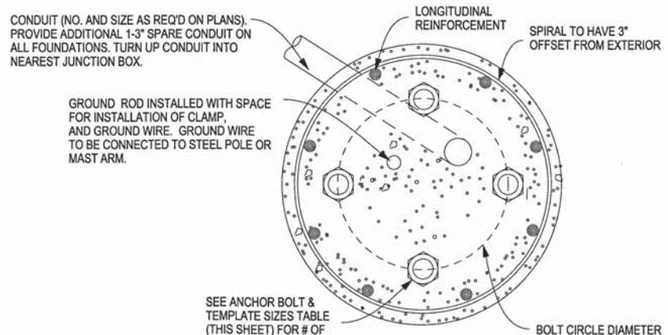

FOUNDATION PLAN

NOT TO SCALE

FOUNDATION SIZE SELECTION TABLE

Mast Arm Length(s) (ft)	Bending Moment (ft-lb)	Torsion (ft-lb)	Shear (lb)	Axial Force (lb)	Foundation Size Selection (diameter in inches, depth in feet)							
					Zone 1 (Diameter/Depth)		Zone 2+ (Diameter/Depth)		Zone 3+ (Diameter/Depth)		Zone 4 (Diameter/Depth)	
55	125,120	121,100	5,500	5,862	*	*	42	18	36	14	*	*
60	141,805	128,940	5,930	6,561	*	*	42	19	36	15	*	*
65	161,259	150,480	6,130	6,965	*	*	48	17	36	16	*	*
70	182,103	169,590	6,620	7,377	*	*	48	19	36	17	*	*
50 & 35	142,210	101,630	5,860	7,572	54	18	36	20	36	13	*	*
50 & 40	147,540	101,610	5,860	7,798	54	18	36	20	36	13	*	*
55 & 40	159,408	119,900	5,910	8,195	*	*	42	18	36	14	*	*
55 & 45	165,981	119,870	5,910	8,425	*	*	42	18	36	14	*	*

**: Special Design Foundation Required*

ANCHOR BOLT & TEMPLATE SIZE TABLE

DRILLED SHAFT DIA	REINFORCING STEEL		ANCHOR BOLT DESIGN		
	VERT BARS	SPIRAL SPACING	# OF ANCHOR BOLTS	ANCHOR BOLT DIA	BOLT CIRCLE DIA
36"	12 - #10	#3 AT 6" < 24" DEPTH #3 AT 12" > 24" DEPTH	4	2 1/4"	24"
42"	17 - #10	#3 AT 6" < 24" DEPTH #3 AT 12" > 24" DEPTH	6	2 1/4"	30"
48"	22 - #10	#3 AT 6" < 24" DEPTH #3 AT 12" > 24" DEPTH	6	2 1/4"	30"
54"	28 - #10	#3 AT 6" < 24" DEPTH #3 AT 12" > 24" DEPTH	6	2 1/4"	30"

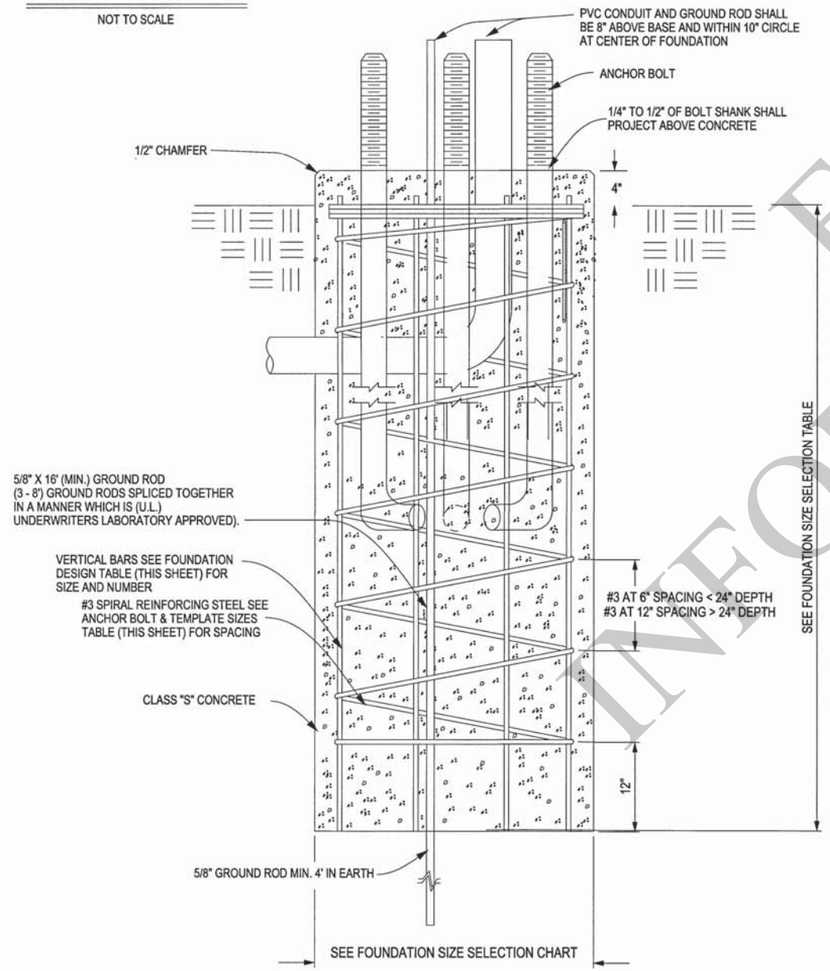

FOUNDATION SECTION

NOT TO SCALE

GENERAL NOTES:

1. THREADS FOR ANCHOR BOLTS AND NUTS SHALL BE ROLLED OR CUT THREADS .
2. THE CONTRACTOR SHALL STAKE THE LOCATION OF EACH POLE FOUNDATION AND NOTIFY THE PROJECT ENGINEER FOR CONCURRENCE IN THE LOCATION BEFORE PROCEEDING WITH THE INSTALLATION OF THE POLE FOUNDATION.
3. ONCE THE POLE FOUNDATION IS INSTALLED, MAST ARM LENGTHS SPECIFIED ON PLANS ARE TO BE VERIFIED BEFORE ORDERING. IF A TIME EXTENSION IS NEEDED, IT SHALL BE AT THE DISCRETION OF THE PROJECT ENGINEER TO GRANT THE EXTENSION.
4. CONDUIT SHALL BE INSTALLED ACCORDING TO PLANS. CONDUIT SHALL BE CENTERED IN THE FOUNDATION WITH EVEN SPACING.
5. ALL SPARE CONDUIT IN FOUNDATIONS SHALL BE STUBBED OUT 24" BELOW GRADE AND BROUGHT INTO JUNCTION BOX.
6. TOP OF BASE SHALL BE ROUND WITH CHAMFERED EDGE.
7. SERVICE CONDUIT SHALL BE 2" DIA. SCH. 80 PVC.
8. USE A GROUND ROD CLAMP TO ATTACH THE #6 AWG BARE GROUND WIRE ONTO THE GROUND ROD AND THE OTHER END TO BE CONNECTED TO THE POLE.
9. ALL GROUND RODS, REGARDLESS OF FOUNDATION SIZE SHALL PROTRUDE THROUGH THE FOUNDATION AND A MINIMUM OF 4' SHALL BE EMBEDED INTO THE EARTH.

SPECIAL DESIGN FOUNDATION NOTES:

SPECIAL DESIGN FOUNDATION NOTES

1. FOUNDATIONS FOR MAST ARM LENGTHS REQUIRING A SPECIAL DESIGN FOUNDATION SHALL BE DESIGNED IN ACCORDANCE WITH THE LATEST EDITION OF THE AASTHO LRFD BRIDGE DESIGN SPECIFICATIONS.
2. FOUNDATION LOADS FOR THE CORRESPONDING MAST ARM LENGTH PROVIDED IN THE FOUNDATION SIZE SELECTION TABLE SHALL BE USED TO DESIGN THE FOUNDATION SIZE AND DEPTH. THE LOADS IN THE TABLE WERE PROVIDED BY THE MAST ARM MANUFACTURERS AND ARE BASED ON A 25-YEAR RECURRENCE INTERVAL AND A WIND SPEED OF 110 MPH. THESE LOADS SHALL ONLY BE USED FOR DESIGN OF THE FOUNDATION.
3. WHEN A SPECIAL DESIGN FOUNDATION IS REQUIRED THE FOUNDATION DESIGN SHALL BE BASED ON SITE SPECIFIC SUBSURFACE INFORMATION. IF SITE SPECIFIC DATA IS NOT MADE AVAILABLE BY DOTD THE DESIGNER SHALL BE RESPONSIBLE FOR OBTAINING SITE SPECIFIC SUBSURFACE INFORMATION.
4. DESIGN CALCULATIONS FOR THE FOUNDATION SHALL BE SUBMITTED TO THE TRAFFIC ENGINEERING SECTION FOR REVIEW.

FOR INFORMATIONAL USE ONLY

SHEET NUMBER

PARISH	CONTROL SECTION	STATE PROJECT

DESIGN S. MCCARROLL
CHECK D. LORIO
DETAIL S. MCCARROLL
CHECK L. WANG
REVIEW
SERIES # 6 OF 14

APPROVED BY CHIEF ENGINEER: DATE: 08/19/2026

NO.	DATE	REVISION OR CHANGE ORDER DESCRIPTION	BY

STATE OF LOUISIANA JOHN BEL EDWARDS GOVERNOR

TRAFFIC SIGNAL DETAILS

55' SINGLE 50'x35' DUAL AND OVER MAST ARM

TSD-05

DOTD LOUISIANA DEPARTMENT OF TRANSPORTATION & DEVELOPMENT

STANDARD PLAN

9/3/2025 11:5:

GENERAL STATIC MAP FOR FOUNDATION REQUIREMENTS SHOWN HERE.
SEE http://goo.gl/QHv2o3 FOR LOCATION SPECIFIC CLASSIFICATION.
ALTERNATIVE: LADOTD WEBSITE/HOME/INSIDE LADOTD/DIVISIONS/OPERATIONS /TRAFFIC SERVICES/TRAFFIC OPERATIONS/APPROVED PRODUCT LIST/TOAPL 165.

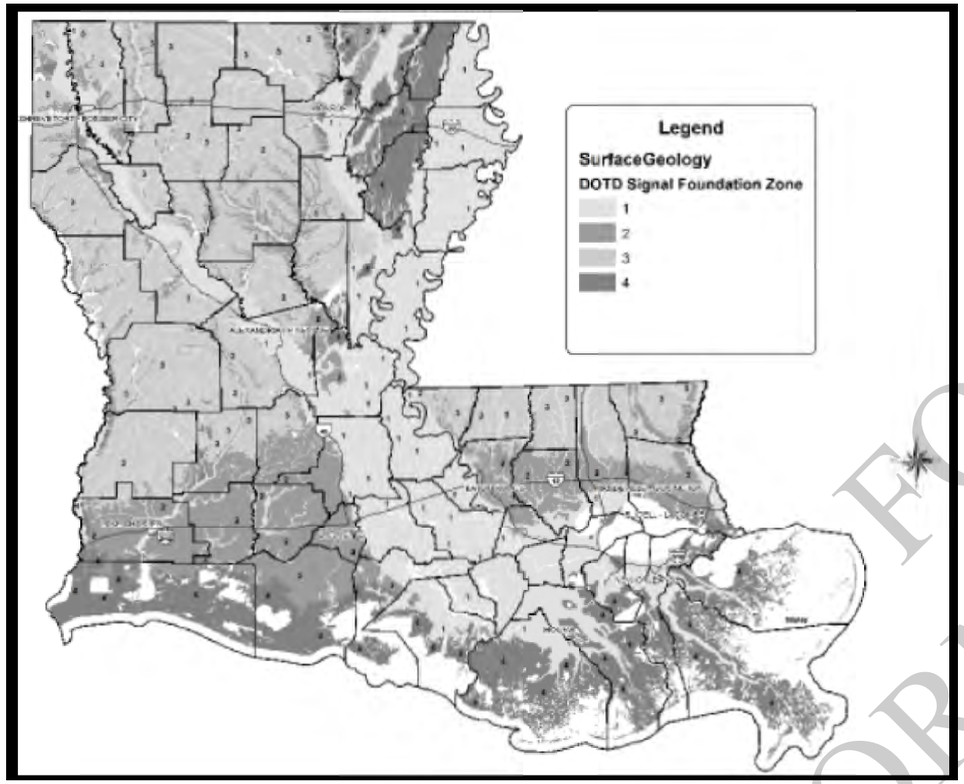

FOUNDATION SIZE ZONING:

1. FOUNDATION ZONES ARE BASED ON THE 1984 GEOLOGICAL MAP OF LOUISIANA PUBLISHED BY THE LOUISIANA GEOLOGICAL SURVEY. LOCAL GEOLOGICAL VARIATIONS ARE LIKELY DUE TO HUMAN ACTIVITIES OR NATURAL EVENTS.
2. THE ZONING MAP IS INTENDED TO ASSIST IN SIZING FOUNDATION FOR SELECTED SIGNAL POLES AND SHOULD NOT BE VIEWED AS A SUBSTITUTE OF ENGINEERING JUDGMENT OR PROPER DESIGN.
3. SOME SOILS SUCH AS GRAVEL OR CEMENTED SOILS MAY NOT BE AMENABLE TO THE CONVENTIONAL DRILLED SHAFT CONSTRUCTION. EXERCISE CAUTION AND SEEK CONFIRMATION OF THE SOIL CONDITIONS DURING DESIGN AND/OR DURING SHAFT EXCAVATION.

ZONE 1 - ALLUVIAL SOILS FORMED BY THE RED RIVER, THE OUACHITA RIVER, THE ATCHAFALAYA RIVER, AND THE MISSISSIPPI RIVER. ASSUMED AVERAGE SOIL SHEAR STRENGTH IS AT LEAST 250 POUNDS PER SQUARE FOOT (PSF).

ZONE 2 - PLEISTOCENE AGE PRAIRIE TERRACES DEPOSITS. ASSUMED AVERAGE SOIL SHEAR STRENGTH IS AT LEAST 500 PSF.

ZONE 3 – PLEISTOCENE AGE OR OLDER DEPOSITS OTHER THAN ZONE 2. ASSUMED AVERAGED SHEAR STRENGTH IS AT LEAST 1,000 PSF.

ZONE 4 - MOSTLY COASTAL MARSH AND SAND/GRAVEL DEPOSITS. SPECIAL DESIGN IS REQUIRED FOR THE SIGNAL POLE WITHIN THIS ZONE.

CONSTRUCTION NOTES:

1. IF GROUNDWATER IS ENCOUNTERED DURING FOUNDATION EXCAVATION AND NO CAVE IN IS OBSERVED, THE GROUNDWATER SHOULD BE PUMPED OUT PRIOR TO STEEL CAGE PLACEMENT. THE WATER REMAINS IN THE EXCAVATION SHOULD BE NO MORE THAN ½ INCH.
2. IF GROUNDWATER IS ENCOUNTERED DURING FOUNDATION EXCAVATION AND CAVE IN IS OBSERVED, THE EXCAVATION SHOULD BE CEASED. CONTACT THE PROJECT ENGINEER IMMEDIATELY. SHOULD THE CAVING IS EXCESSIVE, BACKFILL THE EXCAVATION IMMEDIATELY.
3. FREE FALL CONCRETE IS ALLOWED FOR DRY HOLES ONLY. THE CONCRETE SHALL BE PLACED WITH A HOPPER OR A TREMIE. WHEN FREE FALL METHOD IS USED, CONTROL THE CONCRETE TO FALL VERTICALLY WITHOUT CONTACTING SHAFT WALL OR STEEL CAGE TO PREVENT SEGREGATION.
4. CONCRETE PLACEMENT WITH A TREMIE IS REQUIRED IF EXCESSIVE GROUNDWATER (MORE THAN 6 INCHES ACCUMULATION) IS ENCOUNTERED.
   WHEN THE SOIL CONDITIONS ARE SUSPECTED TO BE DIFFERENT THAN THOSE DESCRIBED IN THE FOUNDATION SIZE ZONING, CONTACT THE PROJECT ENGINEER IMMEDIATELY TO EVALUATE THE SUITABILITY OF THE FOUNDATION DESIGN.

FOR INFORMATIONAL USE

SHEET NUMBER
PARISH | CONTROL SECTION | STATE PROJECT
DESIGN S. MCCARROLL | CHECK D. LORIO | DETAIL S. MCCARROLL | CHECK L. WANG | REVIEW | SERIES # 7 OF 14
APPROVED BY CHIEF ENGINEER: DATE: Oct. 1, 2025
NO. | DATE | REVISION OR CHANGE ORDER DESCRIPTION | BY

TRAFFIC SIGNAL DETAILS
55' SINGLE, 50'X35' DUAL, AND OVER MAST ARM DETAIL
FOUNDATION DETAILS
POLE FOUNDATION DETAILS
TSD-06

DOTD LOUISIANA DEPARTMENT OF TRANSPORTATION & DEVELOPMENT
STANDARD PLAN

9/3/2025 11:5:

TYPICAL CONDUIT RISER ASSEMBLY & INTERCONNECT DETAIL

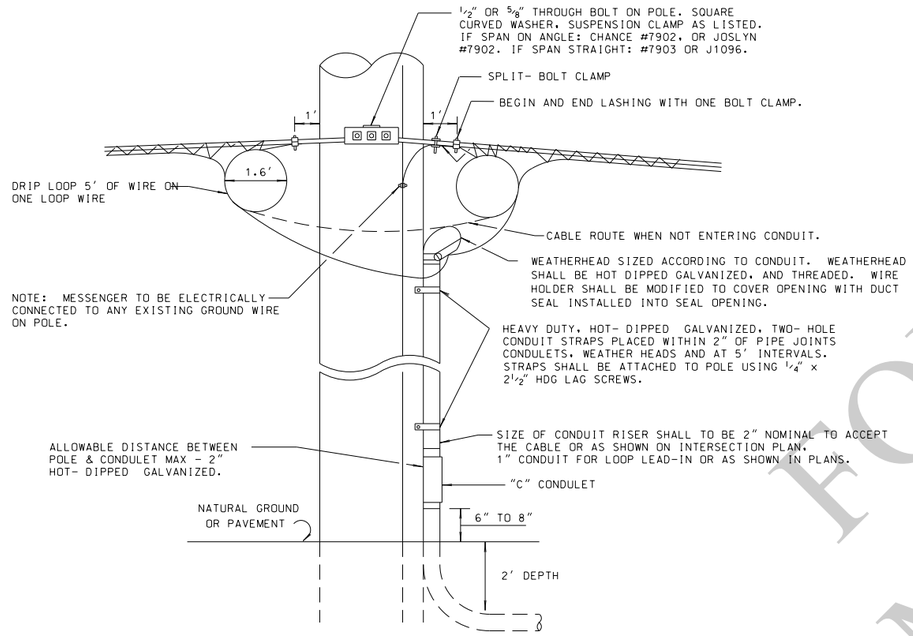

NOTES:

1. PROVIDE DRIP LOOPS ON BOTH SIDES OF SPLICE AND ON BOTH SIDES OF INTERSECTING STREETS.
2. 1/4" SIEMENS MARTIN GRADE GALVANIZED SPAN WIRE, ASTM 475.
3. STAINLESS STEEL LASHING WIRE 0.045" DIAMETER FOR INTERCONNECT TO HOLD CABLE TIGHT AGAINST THE SPAN.
4. MAXIMUM SAG FOR INTERCONNECT MESSENGER CABLE SHALL BE 2% WITH MINIMUM CLEARANCE ABOVE ROADWAY OF 18'.
5. SHOULD UNUSUAL CIRCUMSTANCES BE ENCOUNTERED, SPLICING SHALL BE APPROVED BY THE PROJECT ENGINEER.
6. WHEN INTERCONNECT IS DEAD ENDED AT POLE, HARDWARE AS SHOWN FOR WOOD POLE DETAIL SHALL BE USED.
7. INSTALLATION SHALL BE CLASSIFIED AS 120 VAC SECONDARY LOCATED BELOW POWER COMPANY EQUIPMENT ABOVE OTHER UTILITIES IN ACCORDANCE WITH NATIONAL ELECTRIC SAFETY CODE.

WOOD POLE DETAIL

FOR EXISTING AND NEW

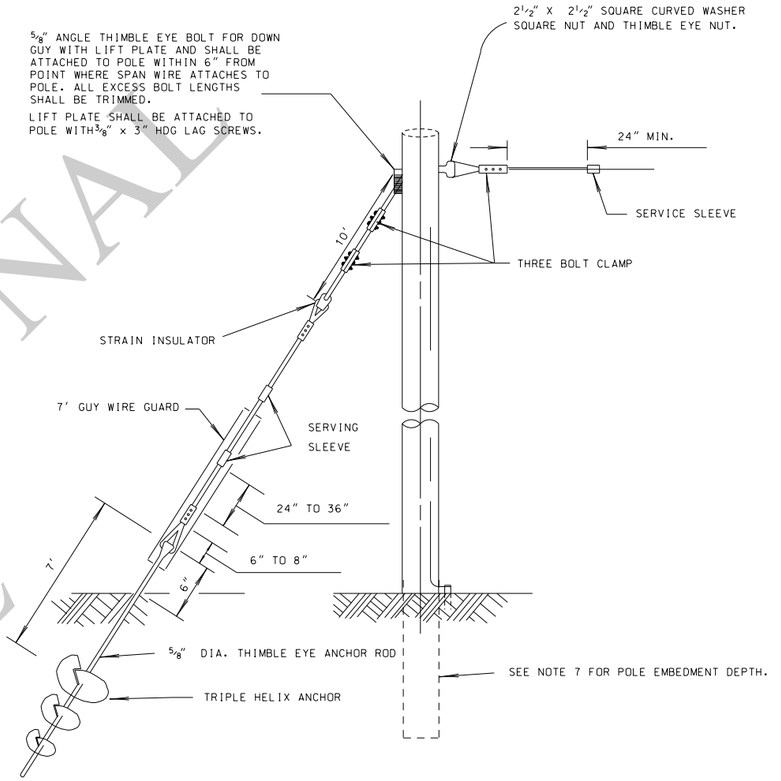

NOTES:

1. TIEBACK ANCHORS MAY BE REQUIRED AS DIRECTED BY THE PROJECT ENGINEER.
2. TOP OF POLE SHALL BE CAPPED WITH MALLEABLE ALUMINUM 0.032" MATERIAL.
3. TOP OF POLE TRIMMED LEAVING A MAXIMUM OF 18" OF POLE ABOVE ATTACHMENT POINT OF SPAN.
4. THE ANCHOR ROD SHALL BE A MINIMUM OF5/8" DIA. 7' LONG. ACCEPTABLE ANCHOR IS: TRIPLE-HELIX ANDHOR, 12"-10"-8", 7,000# CAPACITY, 1 1/2" ROD. ANY EXTENSION NEEDS TO MEET THE REQUIREMENTS IN THE LADOTD SPECIFICATIOND
5. ALL POLES INSTALLED SHALL HAVE A #6 AWG BARE COPPER WIRE INSTALLED THE LENGTH OF POLE WITH BUTT GROUND (APPROVED BY INSPECTOR PRIOR TO INSTALLATION OF POLE) OR CONNECT TO 5/8" X 8' GROUND ROD USING LUG.
6. CLASS 3 POLE SHALL BE USED AND CREOSOTED IN ACCORDANCE WITH LADOTD STANDARD SPECIFICATIONS.
7. GENERALLY, ANCHORS ARE 20' TO 30' BEHIND THE POLE IN LINE WITH THE SPAN. RESTRICTION TO THIS WILL BE PROPERTY LINES OR OBSTRUCTIONS. ALL ATTACHMENT FITTINGS SHALL BE HOT- DIPPED GALVANIZED UNLESS STATED OTHERWISE. POLES EMBEDDED IN GROUND AS FOLLOWS: 35' POLE - 6', 40' POLE - 7', 45' POLE - 8'.

FOR INFORMATIONAL USE

SHEET NUMBER

PARISH | CONTROL SECTION | STATE PROJECT

DESIGN S. MCCARROLL | DETAIL S. MCCARROLL | REVIEW | SERIES # 8 OF 14
CHECK D. LORIO | CHECK L. WANG

APPROVED BY CHIEF ENGINEER: DATE: Oct. 1, 2025

NO.	DATE	REVISION OR CHANGE ORDER DESCRIPTION	BY

STATE OF LOUISIANA

TRAFFIC SIGNAL DETAILS

WOOD POLE AND CONDUIT RISER DETAIL

TSD-07

DOTD LOUISIANA DEPARTMENT OF TRANSPORTATION & DEVELOPMENT

STANDARD PLAN

9/3/2025 11:5:

BRACKET MOUNTED TRAFFIC SIGNALS

WOOD POLE

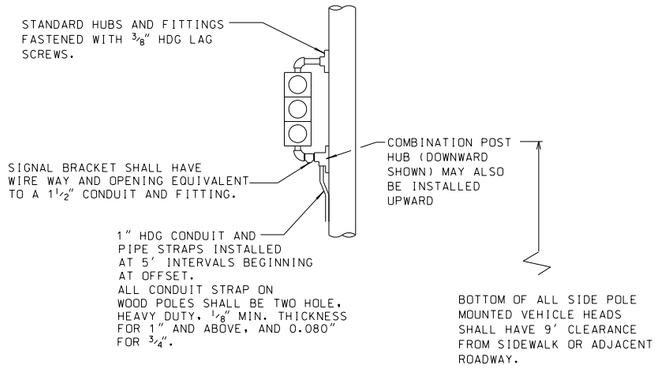

METAL POLE (STRAIN OR MAST ARM)

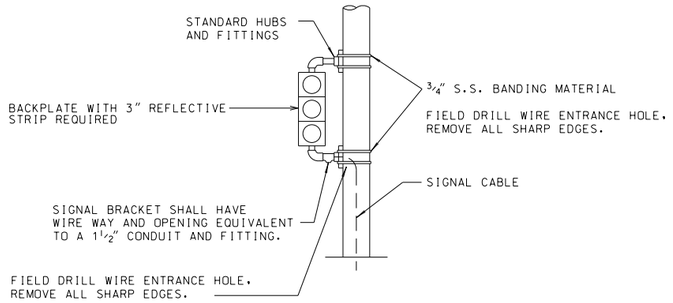

PEDESTRIAN SIGNAL

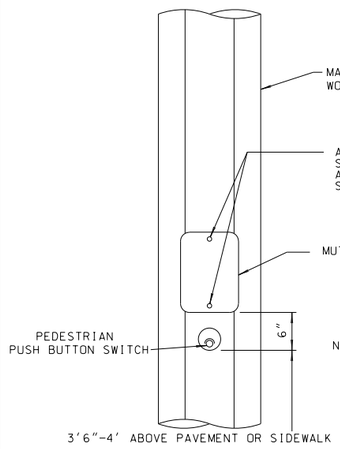

NOTES:

1. PEDESTRIAN PUSH BUTTONS SHALL BE FURNISHED AND INSTALLED WITH COUNTDOWN PEDESTRIAN SIGNALS AS SHOWN IN PLANS. PEDESTRIAN PUSH BUTTONS MAY ALSO BE REQUIRED AT OTHER INTERSECTIONS, AS DESIGNATED ON INTERSECTION LAYOUT SHEETS OF THE PLANS.
2. THE CONTRACTOR SHALL FURNISH AND INSTALL ABOVE EACH PEDESTRIAN PUSH BUTTON A R10-3E(L), R10-3E(R) SIGN AS APPROPRIATE FOR CIRCUMSTANCES. THE DIRECTIONAL ARROW SHALL BE PLACED IN THE DIRECTION OF CROSSWALK.
3. COUNTDOWN PEDESTRIAN SIGNALS MAY BE PLACED EITHER ON TOP OF PEDESTAL OR ON THE SIDE OF A MAST ARM OR STRAIN POLE AS REQUIRED BY PLANS.
4. CLEARANCE FROM THE BOTTOM OF PEDESTRIAN SIGNAL HEADS TO SIDEWALK OR NATURAL GROUND SHALL BE 8' OR SHALL CONFORM TO THE CURRENT ADOPTED EDITION OE THE MUTCD.
5. IF A PEDESTAL IS USED FOR A PUSH BUTTON ONLY, THE TOP OF THE POLE SHALL BE CAPPED.

ONE-SECTION COUNTDOWN PEDESTRIAN SIGNAL (16" X 18" SYMBOL TYPE)

SPAN WIRE SIGNAL MOUNT

SIGNAL HEADS SHALL BE PLUMB. AN ADDITIONAL BALANCE ADJUSTER SHALL BE USED WHERE REQUIRED. TYPICAL SIGNAL SHOWN. ALSO APPLIES TO 2, 3 & 4-WAY ARRANGEMENT.

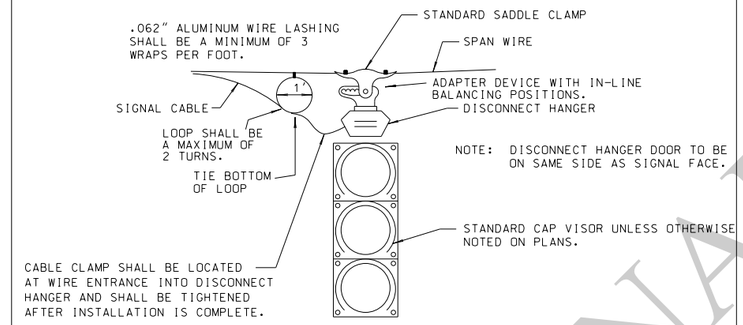

NOTE:
ALL UNUSED OPENINGS SHALL BE PLUGGED AND SEALED.

MAST ARM SIGNAL MOUNT

HEIGHT OF SIGNAL FACES SHALL CONFORM TO THE HEIGHTS SPECIFIED IN THE MANUAL ON UNIFORM TRAFFIC CONTROL DEVICES, CURRENT ADOPTED EDITION.

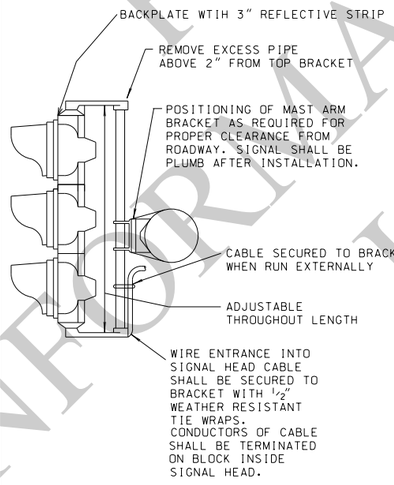

SPAN WIRE FLASHING BEACON MOUNT

ONE 2-WAY HEAD

ALL HEADS SHALL BE HORIZONTALLY ALIGNED

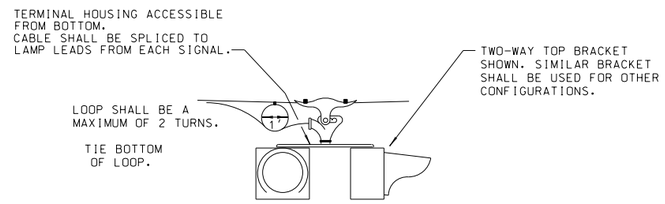

PEDESTAL MOUNTED SIGNAL INSTALLATION

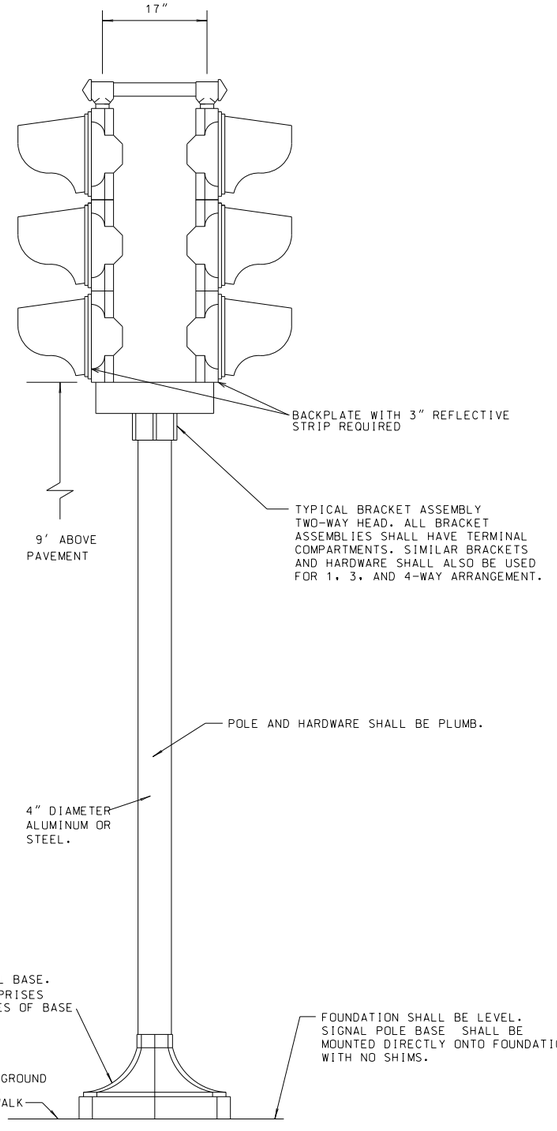

NOTES:

1. FOR FOUNDATION SEE SIGNAL PEDESTAL FOUNDATION LOCATED ON SHEET 3 IN TRAFFIC SIGNAL AND INSTALLATION DETAILS.
2. TWO-WAY AND THREE-WAY SIGNAL HEADS SHALL BE SIMILARLY MOUNTED WITH APPROPRIATE HARDWARE. CLEARANCE FROM THE BOTTOM OF THE SIGNAL HEAD TO SIDEWALK OR NATURAL GROUND SHALL BE 9' OR SHALL CONFORM TO THE CURRENT ADOPTED EDITION OF THE MUTCD.

FOR INFORMATIONAL USE

SHEET NUMBER

PARISH | CONTROL SECTION | STATE PROJECT

DESIGN S. MCCARROLL | DETAIL S. MCCARROLL | SERIES # 9 OF 14
CHECK D. LORIO | CHECK L. WANG | REVIEW

APPROVED BY CHIEF ENGINEER: DATE: Oct. 1, 2025

NO.	DATE	REVISION OR CHANGE ORDER DESCRIPTION	BY

STATE OF LOUISIANA

TRAFFIC SIGNAL DETAILS

SIGNAL MOUNTING DETAILS

TSD-08

DOTD LOUISIANA DEPARTMENT OF TRANSPORTATION & DEVELOPMENT

STANDARD PLAN

9/3/2025 11:5:

TYPICAL CONDUIT INSTALLATION ON BRIDGE STRUCTURE

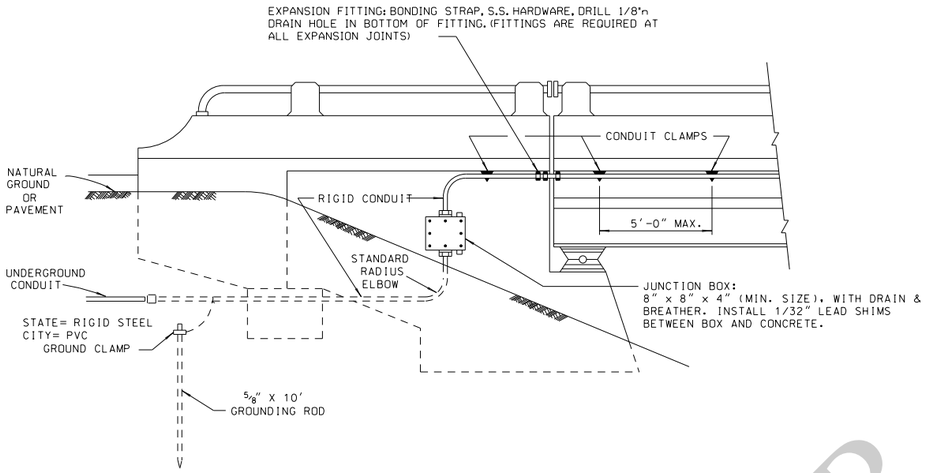

CONDUIT FASTENING DETAIL

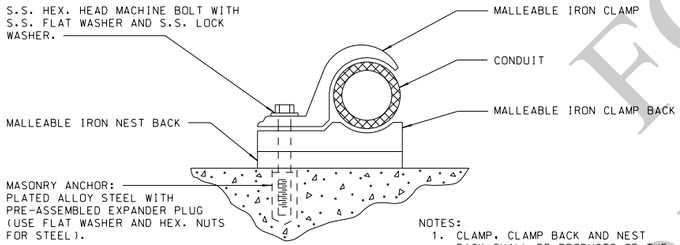

NOTES:
1. CLAMP, CLAMP BACK AND NEST BACK SHALL BE PRODUCTS OF THE SAME MANUFACTURER.
2. FLANGES OF STEEL BEAMS SHALL NOT BE DRILLED.
3. 5'-0" MAX. SPACING.
4. BOLT SCHEDULE:
   - 3/4" & 1" CLAMPS — — 1/4" Ø BOLTS
   - 1-1/4" & 1-1/2" CLAMPS — 3/8" Ø BOLTS
   - 2" & LARGER CLAMPS — — 1/2" Ø BOLTS

SUSPENDED BOX INSTALLATION

ALSO USED ON BRIDLE SPAN INSTALLATION

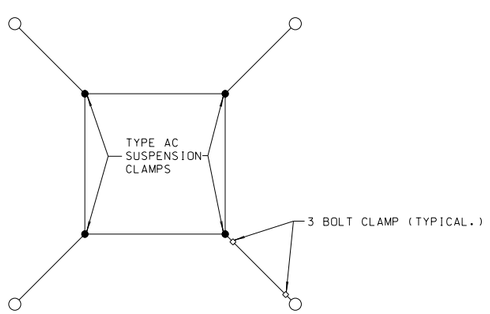

TYPE AC SUSPENSION CLAMP

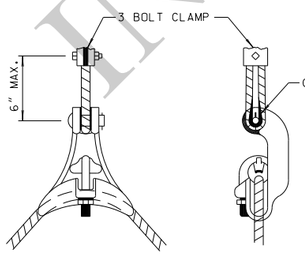

NOTES:
1. TYPE AC SUSPENSION CLAMPS SHALL BE CAPABLE OF WITHSTANDING A TENSILE LOAD OF 25,000 POUNDS AND SHALL BE GROOVED FOR 3/8" CABLE. TYPE AC SUSPENSION CLAMPS SHALL BE USED FOR ALL SUSPENDED BOX INSTALLATIONS.
2. CABLE SHALL HAVE 3' OF SPARE CABLE FORMED AS A LOOP ON EACH SIDE OF CLAMP.

INSTALLATION DETAIL OF MAST ARM ATTACHMENTS FOR SIGN AND SIGNAL BRACKETS

SIGNAL- ISOMETRIC VIEW

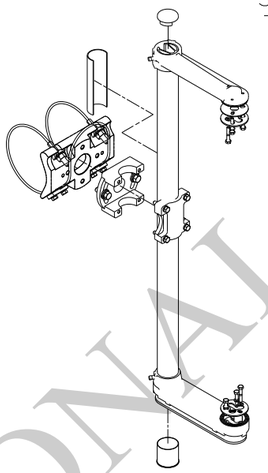

SIGN - SIDE VIEW

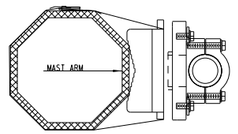

SIGN - FRONT VIEW

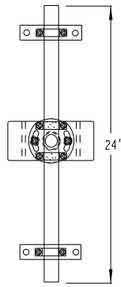

NOTE:
1. BRACKETS SHALL UTILIZE A STRANDED CABLE TO ATTACH BRACKET TO ARM.
2. ATTACHMENTS SHALL BE ADJUSTABLE TO PLUMB.
3. ADDITIONAL SIGN BACKING MAY BE REQUIRED FOR SIGNS LARGER THAN 36". APPROVAL OF PROJECT ENGINEER REQUIRED PRIOR TO INSTALLATION.

SPAN WIRE SIGN BRACKET

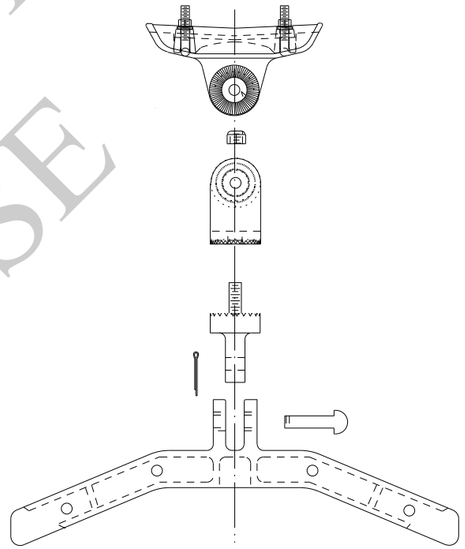

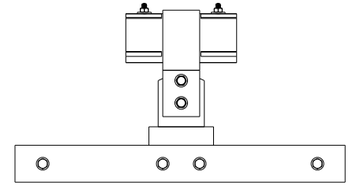

FRONT VIEW

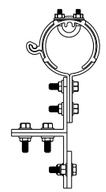

SIDE VIEW

NOTES:

1. ALL MATERIAL FOR DEVICES SHOWN SHALL BE CAST ALUMINUM CONSTRUCTION WITH COATING TO PREVENT OXIDATION.
2. SIGN MOUNTING BRACKET PRE-DRILLED WITH 1/2" HOLES (SEE DRAWING).
3. BOTTOM OF SIGN SHALL BE WEIGHTED WITH STEEL BAR PAINTED TO RESIST CORROSION. BRACKET AND WEIGHT SHALL BE ATTACHED TO SIGN WITH HDG OR STAINLESS STEEL 3/8" BOLTS, WASHERS, AND NUTS.
4. SPAN WIRE SADDLE SHALL BE DESIGNED TO FIT A CABLE RANGE OF 3/8" - 1/2".
5. BRACKET SHALL BE INSTALLED SO THAT THE SIGN IS PLUMB AND PERPENDICULAR TO THE DRIVERS LINE OF VIEW.

FOR INFORMATIONAL USE

SHEET NUMBER

PARISH | CONTROL SECTION | STATE PROJECT

DESIGN S. MCCARROLL | DETAIL S. MCCARROLL | SERIES # 10 OF 14
CHECK D. LORIO | CHECK L. WANG | REVIEW

APPROVED BY CHIEF ENGINEER:
DATE: Oct. 1, 2025

NO.	DATE	REVISION OR CHANGE ORDER DESCRIPTION	BY

STATE OF LOUISIANA

TRAFFIC SIGNAL DETAILS
HARDWARE DETAILS
TSD-09

DOTD LOUISIANA DEPARTMENT OF TRANSPORTATION & DEVELOPMENT

STANDARD PLAN

9/3/2025 11:5:

PEDESTAL-MOUNTED SIGNAL SERVICE POLE INSTALLATION

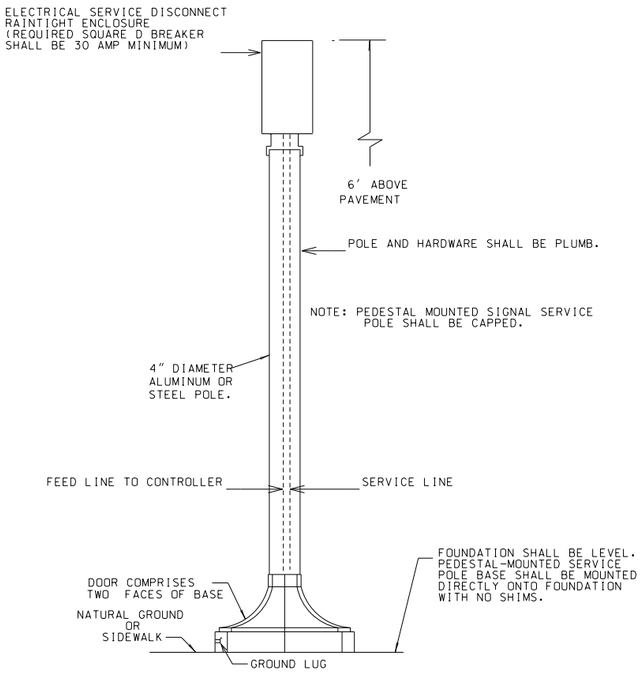

(FOR FOUNDATION USE STANDARD DETAIL FOR SIGNAL PEDESTAL FOUNDATION)

NOTES:

1. UNDERGROUND CONDUIT SHALL BE INSTALLED IN A STRAIGHT LINE FROM START TO FINISH. ANY DEVIATION FROM A STRAIGHT LINE WILL REQUIRE PRIOR APPROVAL BY THE PROJECT ENGINEER.
2. THE CONTRACTOR SHALL NOT RECEIVE DIRECT PAY FOR VERTICAL RUN AT THE START AND FINISH POINTS AS WELL AS ADDITIONAL CONDUIT DUE TO A DEVIATION FROM A STRAIGHT LINE INSTALLATION.
3. ALL CONCRETE SHALL BE "CLASS A" IN ACCORDANCE WITH SECT. 901 OF THE STD. SPEC'S.
4. ALL SERVICE POLES SHALL BE GROUNDED WITH #6 AWG BARE SOLID GROUNDING WIRE.
5. INSTALL NEW GROUND ROD. CONNECT GROUND ROD TO SIGNAL PEDESTAL BY NEW GROUND WIRE.
6. SERVICE SHALL BE120/240 V. AC AND WIRED WITH THHN-THWN OR XHHW #6 AWG. TWO BLACKS, AND ONE WHITE NEUTRAL, 3 CONDUCTOR. CONCENTRIC CABLE SHALL BE INSTALLED WHERE SERVICE WILL ATTACH TO OR ENTER STEEL SIGNAL POLE.
7. SERVICE CONDUCTORS SHALL BE RUN IN A SEPARATE CONDUIT TO CONTROLLER BASE.
8. ALL EXPOSED METAL SHALL BE PAINTED AS PER LADOTD STANDARD SPECIFICATIONS.

ELECTRICAL SERVICE DISCONNECT RAINTIGHT ENCLOSURE FOR PEDESTAL MOUNTED SIGNAL SERVICE POLE

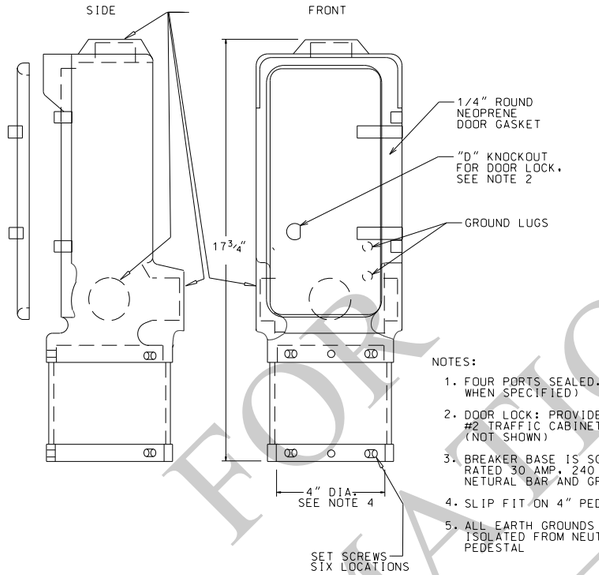

NOTES:

1. FOUR PORTS SEALED. (1 1/2" FPT WHEN SPECIFIED)
2. DOOR LOCK: PROVIDE MATCHED #2 TRAFFIC CABINET KEY. (NOT SHOWN)
3. BREAKER BASE IS SQUARE D RATED 30 AMP, 240 VAC WITH NETURAL BAR AND GROUND LUG.
4. SLIP FIT ON 4" PEDESTAL POLE.
5. ALL EARTH GROUNDS SHALL BE ISOLATED FROM NEUTRAL BUS AT PEDESTAL

WIRING FOR FLASHING BEACON

HEADS SHALL BE WIRED FOR A SIMULTANEOUS FLASH FOR EACH APPROACH.

NO SPARE CONDUCTORS REQUIRED
RED - FLASH CIRCUIT #1
BLACK - FLASH CIRCUIT #2
WHITE- AC COMMON
GREEN - CASE GROUND

WIRING DETAIL FOR TRAFFIC SIGNAL HEADS & HANGERS

	INDICATIONS	TERMINAL BLOCK	2-6 CONDUCTOR CABLES		1-10 CONDUCTOR CABLE
HEAD 1	GREEN	1	GREEN	CABLE 1	GREEN
	AMBER	2	YELLOW	CABLE 1	YELLOW
	RED	3	RED	CABLE 1	RED
HEAD 2	GREEN	4	GREEN	CABLE 2	G/BLACK
	AMBER	5	YELLOW	CABLE 2	Y/BLACK
	RED	6	RED	CABLE 2	R/BLACK
	COMMON	7	WHITE	CABLE 1 & 2	WHITE
	GREEN ARROW	8	BLACK	CABLE 1	BLACK
	AMBER ARROW	9	BLACK	CABLE 2	W/ BLACK
		10			
		11			
	CASE GROUND	12	BLUE	CABLE 1 & 2	BLUE

NOTE: EIGHTEEN CIRCUIT DISCONNECT HANGERS SHALL BE SIMILARLY WIRED WITH SOLID INDICATIONS WIRED FIRST FOLLOWED BY ARROW INDICATIONS. ON SPAN MOUNTED SIGNAL INSTALLATIONS, ALL BULBS SHALL BE INDIVIDUALLY WIRED FROM CONTROLLER. ALL CABLES SHALL BE CONTINUOS RUN WITHOUT SPLICES EXCEPT AS SHOWN FOR MAST ARM INSTALLATIONS AT DISCONNECT HANGERS SHOWN ON PLANS OR WHERE JUNCTIONS ARE SHOWN ON THE PLANS. ALL WIRES SHALL BE TERMINATED IN HANGER. CONDUCTORS THAT ARE UNUSED IN SIGNAL THAT DO NOT HAVE INDICATIONS SHOWN ABOVE SHALL BE SPARE CONDUCTORS AND SHALL NOT BE USED. THE HARNESS FROM THE SIGNAL TERMINAL BLOCK SHALL BE WIRED IN ACCORDANCE TO THE ABOVE TABLE, UNUSED CONDUCTORS SHALL BE BONELESS IN HEAD WITH ENDS TAPED TO PREVENT GROUNDING TO CASES.

OVERHEAD SERVICE TO CONTROLLER

(AS CALLED FOR IN THE PLANS OR APPROVED BY PROJECT ENGINEER)

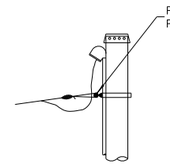

NOTE: SERVICE CLAMPS FOR CONCENTRIC CABLE. NO MESSENGER CABLE REQUIRED.

TYPICAL ELECTRICAL SERVICE

(BREAKER SIZED ACCORDING TO THE LOAD WITH MINIMUM BREAKER SIZE OF 60 AMP)

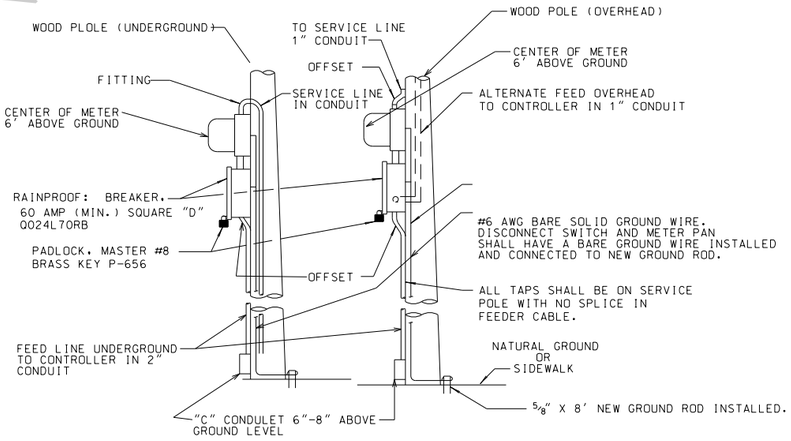

NOTES:

1. UNDERGROUND CONDUIT SHALL BE INSTALLED IN A STRAIGHT LINE FROM START TO FINISH. ANY DEVIATION FROM A STRAIGHT LINE WILL REQUIRE PRIOR APPROVAL BY THE PROJECT ENGINEER.
2. ALL SERVICE POLES SHALL BE GROUNDED WITH #6 AWG BARE SOLID GROUNDING WIRE.
3. INSTALL NEW GROUND ROD AND WIRE.
4. SERVICE SHALL BE 120/240 V. AC AND WIRED WITH THHN-THWN OR XHHW #6 AWG. TWO BLACKS, AND ONE WHITE NEUTRAL, 3 CONDUCTOR, CONCENTRIC CABLE SHALL BE INSTALLED WHERE SERVICE WILL ATTACH TO OR ENTER STEEL SIGNAL POLE.
5. SERVICE CONDUCTORS SHALL BE RUN IN A SEPARATE CONDUIT TO CONTROLLER BASE.
6. CONDUIT STRAPS SHALL BE 2 HOLE, HEAVY DUTY AND SHALL BE INSTALLED BEGINNING AT FITTING OFFSET OR COUPLING, SPACED AT 5' INTERVALS MAXIMUM ON EACH SIDE OF CONDULETS AND ADJACENT TO CABINET. 1/4" x 3" HDG LAG SCREWS SHALL BE USED ON STRAPS.
7. ALL EQUIPMENT SHALL BE ATTACHED TO POLE WITH HDG LAG SCREWS.
8. AN ELECTRICAL SERVICE SHALL NEVER BE BUILT ON A MAST ARM OR STRAIN POLE.

FOR NATIONAL INFO ONLY USE

SHEET NUMBER

PARISH	CONTROL SECTION	STATE PROJECT

DESIGN	S. MCCARROLL	DETAIL	S. MCCARROLL
CHECK	D. LORIO	CHECK	L. WANG
		REVIEW	

SERIES # 11 OF 14

APPROVED BY CHIEF ENGINEER: DATE: Oct. 1, 2025

NO.	DATE	REVISION OR CHANGE ORDER DESCRIPTION	BY

STATE OF LOUISIANA

TRAFFIC SIGNAL DETAILS

ELECTRICAL SERVICE AND WIRING DETAILS

TSD-10

DOTD LOUISIANA DEPARTMENT OF TRANSPORTATION & DEVELOPMENT

STANDARD PLAN

TYPICAL SAW CUT LAYOUT

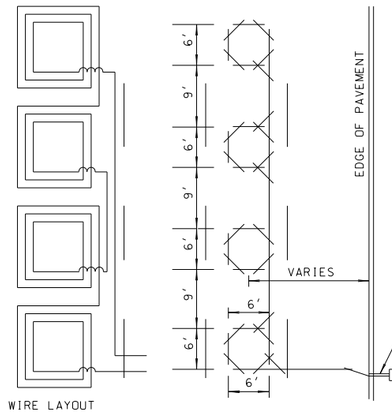

WIRE LAYOUT

NOTES:

1. LOOPS SHALL CONSIST OF A CONTINUOUS LENGTH OF NO. 14 AWG, 19-STRAND WIRE, INSULATED BY A CROSS-LINKED THERMOSETTING BLACK POLYETHYLENE COMPOUND (ASTM D-2655-80).
2. THE CONDUCTOR SHALL BE COPPER AND SHALL, BEFORE INSULATING, CONFORM TO THE REQUIREMENTS OF ASTM B-3.
3. THE STRANDED CONDUCTOR SHALL UTILIZE EITHER CONCENTRIC OR BUNCH STRANDING AND SHALL CONFORM TO THE CIRCULAR MIL AREA AND PHYSICAL REQUIREMENTS SPECIFIED IN ASTM DESIGNATION B-8, OR ASTM DESIGNATION B-174, FOR BUNCH STRANDING.
4. THE INSULATION SHALL BE APPLIED CONCENTRICALLY ABOUT CONDUCTOR. THE THICKNESS OF THE INSULATION SHALL BE NOT LESS THAN 0.030 INCHES AT ANY POINT WITH A MINIMUM AVERAGE THICKNESS OF 0.035 INCHES. THE METHOD OF MEASUREMENT AND THE APPARATUS USED SHALL BE IN ACCORDANCE WITH UNDERWRITERS LABORATORIES, INCORPORATED STANDARD UL62 (ANSI C33.1).
5. THE INSULATION OF THE FINISHED CONDUCTOR SHALL WITHSTAND WITHOUT BREAKDOWN THE APPLICATION OF A 60 OR 3000 HERTZ, 7500 VOLT (RMS) ESSENTIALLY SINUSOIDAL SPARK TEST POTENTIAL IN ACCORDANCE WITH THE METHOD AND USING EQUIPMENT SPECIFIED IN UNDERWRITERS LABORATORIES, INCORPORATED STANDARD UL83 (ANSI C33.8).
6. LOOP WIRE SHALL CONFORM TO IMSA SPECIFICATION 51-7 EXCEPT WHERE MODIFIED BY THESE SPECIFICATIONS.
7. THE INSULATED CONDUCTOR SHALL BE COMPLETELY ENCASED IN A TUBE OF LOW DENSITY POLYETHYLENE CONFORMING TO THE FOLLOWING DIMENSIONS:

NOMINAL OUTSIDE DIAMETER	.24 INCH
MAXIMUM OUTSIDE DIAMETER	.25 INCH
NOMINAL INSIDE DIAMETER	.173 INCH
MAXIMUM INSIDE DIAMETER	.190 INCH
NOMINAL WALL THICKNESS	.030 INCH
MAXIMUM WALL THICKNESS	.035 INCH

THE NAME OF THE MANUFACTURER, THE YEAR OF MANUFACTURE, AND ANY APPLICABLE PART NUMBER SHALL BE PRINTED ON THE ENCASING TUBE AT INTERVALS OF 27 INCHES OR LESS

8. SLOTS SHALL BE CLEANED OF LOOSE MATERIAL. THE WIRE SHALL BE CAREFULLY INSTALLED TO ENSURE THE INSULATION IS NOT DAMAGED.
9. LOOPS POSITIONED PART IN ASPHALT AND PART IN CONCRETE SHALL BE SEPARATED. SEPARATE LOOPS SHALL TERMINATE AT THE JUNCTION BOX AND SHALL BE WIRED IN SERIES.

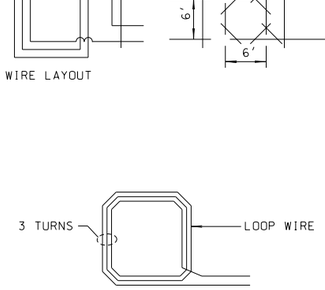

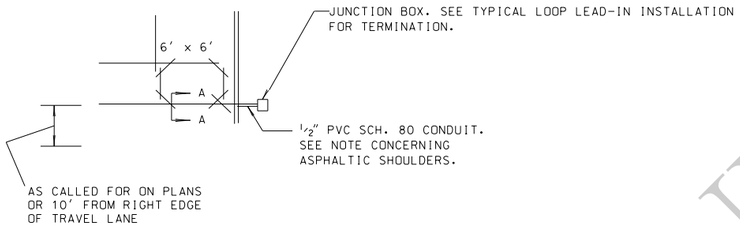

$^1/_2$" PVC SCH. 80 CONDUIT. SEE NOTE CONCERNING ASPHALTIC SHOULDERS.

JUNCTION BOX. SEE TYPICAL LOOP LEAD-IN INSTALLATION FOR TERMINATION.

JUNCTION BOX. SEE TYPICAL LOOP LEAD-IN INSTALLATION FOR TERMINATION.

$^1/_2$" PVC SCH. 80 CONDUIT. SEE NOTE CONCERNING ASPHALTIC SHOULDERS.

LOOP SAW-CUT CONFIGURATION

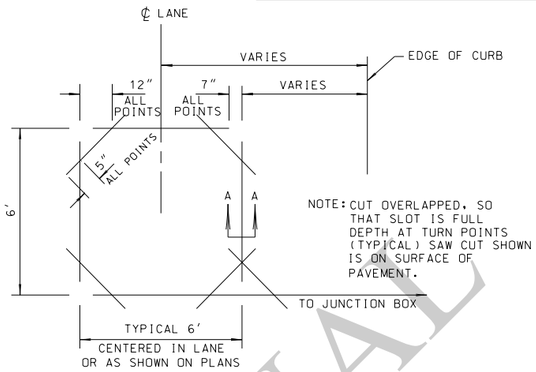

NOTE: CUT OVERLAPPED, SO THAT SLOT IS FULL DEPTH AT TURN POINTS (TYPICAL) SAW CUT SHOWN IS ON SURFACE OF PAVEMENT.

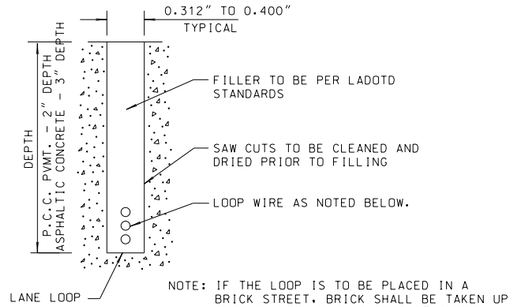

SECTION A-A

NOTE: IF THE LOOP IS TO BE PLACED IN A BRICK STREET, BRICK SHALL BE TAKEN UP AND THE LOOP WIRE PLACED 1" BELOW THE BRICK BEDDING SURFACE TO PREVENT ABRASION BETWEEN BRICK AND WIRE. BRICK SHALL BE REPLACED TO ORIGINAL GRADE UPON COMPLETION OF LOOP WIRE PLACEMENT.

NOTE: SAW CUTS DO NOT MEET AT CORNER OF RECTANGLE. DIMENSIONS SHOWN ARE REQUIRED FOR USING 12"SAW BLADE. LARGE BLADES REQUIRE LONGER DISTANCES THAN SHOWN AT CORNERS. CONTRACTOR IS RESPONSIBLE FOR MAINTAINING CORRECT DEPTH REGARDLESS OF BLADE SIZE, UNLESS OTHERWISE NOTED IN PLANS.

TYPICAL LOOP LEAD-IN INSTALLATION

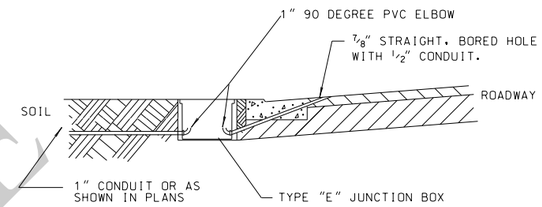

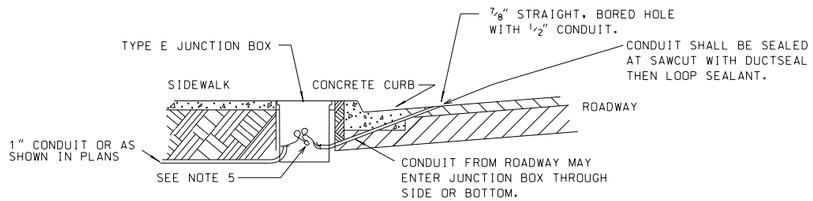

NOTES:

1. CONTRACTOR SHALL PROVIDE $^1/_2$" CONDUIT FROM JUNCTION BOX AND TERMINATE BELOW GROUND SO THAT IT DIRECTLY RECEIVES LOOP LEAD-IN WIRE.
2. FOR A LOOP INSTALLATION IN PAVEMENT WITH OVERLAYS LESS THAN 3" OVER CONCRETE, A DEEPER DEPTH SAWCUT SHALL BE REQUIRED. THE DEPTH REQUIRED SHALL PRODUCE A 1" SAW CUT INTO THE CONCRETE AND SHALL BE DETERMINED AT THE JOB SITE. THE SAW CUT SHALL BE APPROVED BY THE PROJECT ENGINEER PRIOR TO THE WIRE INSTALLATION.
3. FOR LOOP INSTALLATIONS IN ROADWAY THAT HAS ASPHALT SHOULDERS, THE $^1/_2$" CONDUIT SHOWN ABOVE SHALL BE EXTENDED THROUGH A TRENCH IN THE SHOULDER TO A JUNCTION BOX INSTALLED OUTSIDE THE SHOULDER.
4. IDENTIFY LOOP WIRES WITH PERMANENT LABEL MARKED WITH CONTROLLER PHASE.
5. LOOP SPLICE SHALL BE MADE INSIDE THE JUNCTION BOX WITH A COPPER OPEN ENDED COMPRESSION SPLICE CAP AND CRIMPED. THE LOOP SPLICE SHALL THEN BE SEALED WITH A SCOTCHCAST ELECTRICAL INSULATING RESIN SYSTEM OR A APPROVED EQUAL.

PAVEMENT JOINT & CRACK SECTION

LEAVE WIRE SLACK

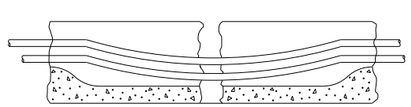

NOTE: DROP SAW BLADE DOWN TO ALLOW SLACK IN CABLE FOR A JOINT LESS THAN $^1/_2$". ALL OTHER JOINTS SHALL NOT BE CROSSED EXCEPT AS DIRECTED BY ENGINEER.

FOR INFORMATIONAL USE

SHEET NUMBER

PARISH | CONTROL SECTION | STATE PROJECT

DESIGN S. MCCARROLL | DETAIL S. MCCARROLL | SERIES # 12 OF 14
CHECK D. LORIO | CHECK L. WANG | REVIEW

APPROVED BY CHIEF ENGINEER: DATE: Oct. 1, 2025

NO.	DATE	REVISION OR CHANGE ORDER DESCRIPTION	BY

STATE OF LOUISIANA DEPARTMENT OF TRANSPORTATION AND DEVELOPMENT

TRAFFIC SIGNAL DETAILS

SAW CUTTING PAVEMENT AND LOOP WIRE DETAILS

TSD-11

DOTD LOUISIANA DEPARTMENT OF TRANSPORTATION & DEVELOPMENT

STANDARD PLAN

9/3/2025 11:5:

9/3/2025 11:5:

JUNCTION BOX INSTALLATION

H-10 RATED

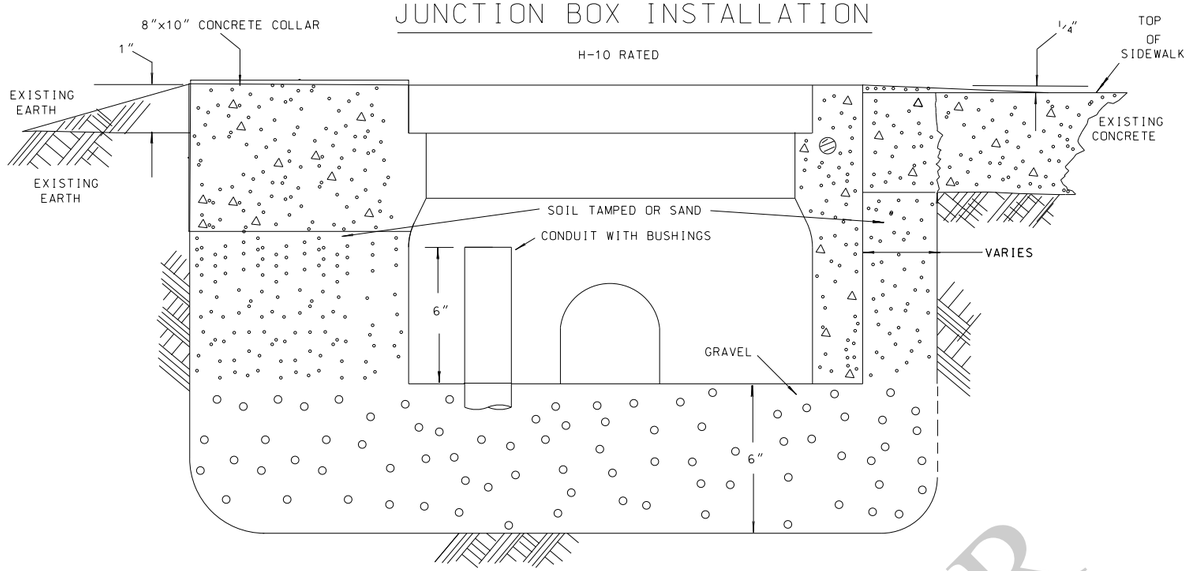

NOTE FOR ALL JUNCTION BOXES:

1. TOP OF BOX TO EXTEND 1/4" ABOVE EXISTING SIDEWALK WITH NEW SIDEWALK SLOPED UP TO TOP OF BOX.
2. DO NOT PLACE JUNCTION BOXES IN THE TRAVELED WAY OR ON SHOULDERS.
3. PROVIDE 8" X 10" CONCRETE COLLARS EXCEPT WITHIN CONCRETE PAVED AREAS. CONCRETE COLLARS SHALL BE PROVIDED AROUND THE TOP PERIMETER OF JUNCTION BOX. CONCRETE COLLAR SHALL BE PAID FOR UNDER THE JUNCTION BOX PAY ITEM.

JUNCTION BOX

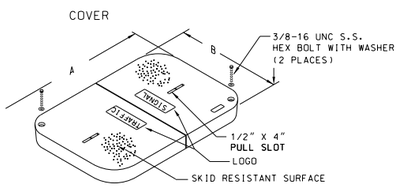

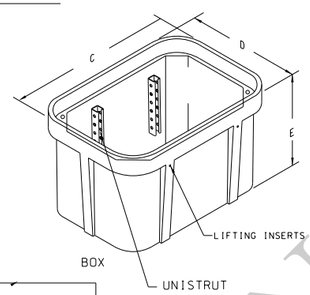

TYPE DIMENSION (IN.) (APPROX.)					
BOX	A	B	C	D	E
E	23 3/4	13 3/4	25	15 1/2	12
F	30 1/2	17 1/2	32 1/4	19 1/4	12
G	35 5/8	24	37 5/8	26	18
H	35 5/8	24	37 5/8	26	36
I	47 5/8	30 1/8	49 5/8	32 1/8	18
J	47 5/8	30 1/8	49 5/8	32 1/8	36

NOTE FOR ALL JUNCTION BOXES:
1. JUNCTION BOX SHALL BE AN APPROVED PRODUCT LISTED ON THE TRAFFIC OPERATIONS APPROVED PRODUCT LIST (TOAPL)USE THE TYPE JUNCTION BOX SHOWN IN PLANS.
2. A MINIMUM OF 6' OF SPARE SIGNAL, LOOP LEAD-IN, 6PR, AND SERVICE CABLE SHALL BE INSTALLED IN EACH JUNCTION BOX.
3. "TRAFFIC SIGNAL" SHALL BE IMPRINTED ON THE JUNCTION BOX BY THE MANUFACTURER.

* NOTE FOR TYPE G, H, I AND J JUNCTION BOXES:
1. TWO PIECE COVER.
2. TWO PIECES OF UNISTRUT MOUNTED ON INSIDE WALL.
3. LIFTING INSERTS ON OUTSIDE OF BOX.
4. PROJECTS WITH FIBER OPTIC COMMUNICATION: INSTALL A MINIMUM OF 50' SPARE FIBER IN TYPE "GG" AND 100' SPARE FIBER IN LARGER JUNCTION BOXES.

BRIDGE/RAILROAD PREEMPTION

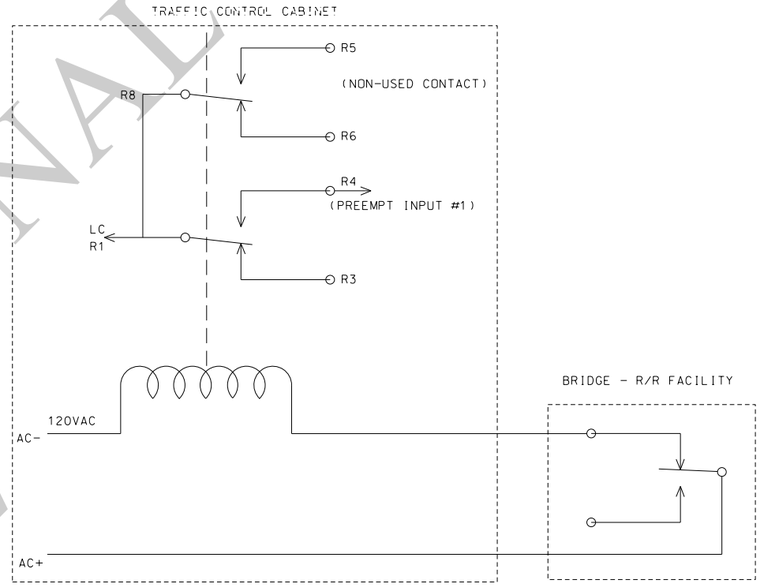

NOTE:
1. RELAYS SHOWN IN NORMAL (NON-PREEMPT) CONDITION
2. PREEMPT RELAY - 2 POLE DOUBLE THROW
3. LC = LOGIC GROUND

FOR INFORMATIONAL USE

SHEET NUMBER

PARISH | CONTROL SECTION | STATE PROJECT

DESIGN S. MCCARROLL | DETAIL S. MCCARROLL
CHECK D. LORIO | CHECK L. WANG
REVIEW | SERIES # 13 OF 14

APPROVED BY CHIEF ENGINEER:
DATE: Oct. 1, 2025

NO.	DATE	REVISION OR CHANGE ORDER DESCRIPTION	BY

TRAFFIC SIGNAL DETAILS
JUNCTION BOX AND PULL BOX
TSD-12

DOTD LOUISIANA DEPARTMENT OF TRANSPORTATION & DEVELOPMENT

STANDARD PLAN

9/3/2025 11:5:

STEEL POLE MOUNTING FOR: SIGNAL CABINET OR FLASHER CABINET

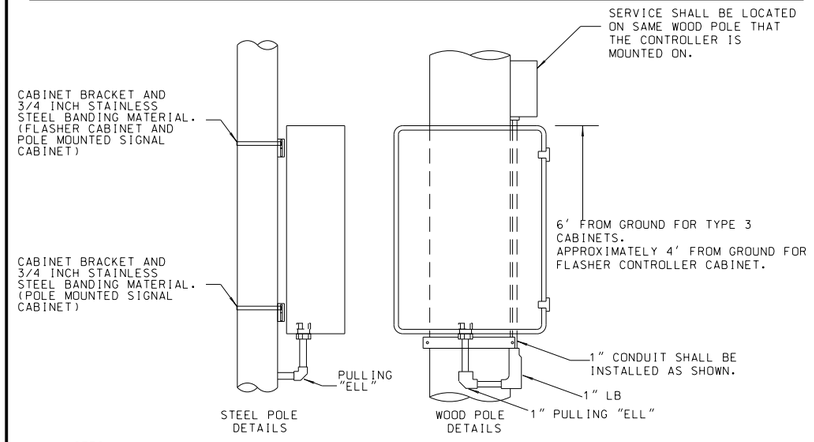

NOTES:

1. WIRE ENTRY INTO CABINET FROM STEEL POLE SHALL BE THROUGH BOSSES PROVIDED ON POLE. PULLING ELLS SHALL BE USED FOR SIGNAL CIRCUIT AND SERVICE CONDUIT. A MYERS HUB ATTACHMENT ON BOTTOM OF CABINET SHALL BE USED FOR SIGNAL CIRCUIT CONDUIT. A MYERS HUB SHALL BE INSTALLED ON CABINET FOR SERVICE ENTRANCE.
2. ALL SERVICE DISCONNECTS SHALL BE LOCATED ON THE CLOSEST WOOD PLOE AVAILABLE FOR SERVICE.
3. TOP AND BOTTOM OF CABINET SHALL BE ATTACHED TO WOOD POLES USING BRACKETS MOUNTED WITH CONDUIT HUBS, STANDARD BRACKET, AND ATTACHED TO POLE WITH $^{1}/_{2}$" X 4" HDG LAG SCREWS.
4. CONDUIT FOR SIGNAL CIRCUIT SHALL BE 3".
5. POLE MOUNTED SIGNAL CABINET: A 3' X 5' X 4" CONCRETE PAD SHALL BE POURED NEXT TO THE CONTROLLER CABINET POLE AND SHALL BE ABOVE GROUND LEVEL.
6. USE A #6 AWG BARE GROUND WIRE TO ATTACH CABINET TO GROUND ROD.
7. ALL GROUND RODS, REGARDLESS OF FOUNDATION SIZE SHALL PROTRUDE THROUGH THE FOUNDATION AND A MINIMUM OF 4' SHALL BE EMBEDED INTO THE EARTH

TYPICAL CONTROLLER FOUNDATION

FOR TYPE 5, 6, AND 7 CABINETS (SEE LADOTD TCS# 18)

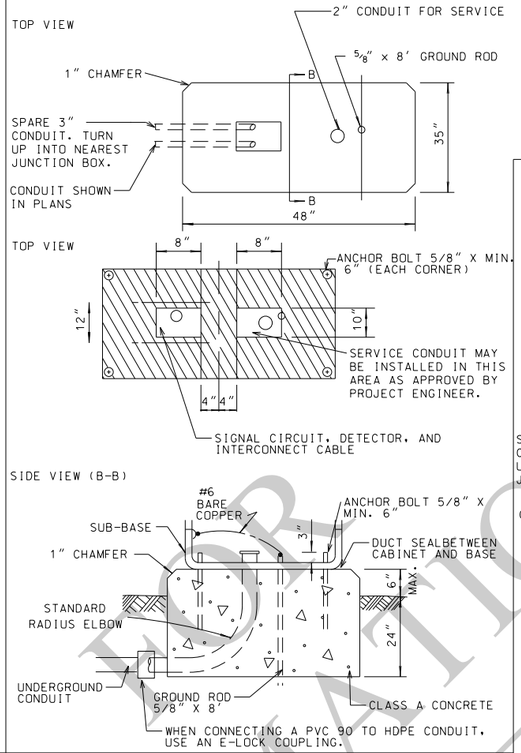

NOTES:

1. ALL GROUND MOUNTED CONTROLLERS SHALL HAVE A SPARE 3" CONDUIT RAN 24" BELOW GRADE TO JUNCTION BOX.
2. ALL EXPOSED CONCRETE EDGES SHALL HAVE A 1" CHAMFER.
3. ALL CONDUIT, GROUND ROD AND ANCHOR BOLTS SHALL PROTRUDE 2 3/4 " MIN. - 3" MAX. ABOVE FINISHED FOUNDATION.
4. FOUNDATION SHALL BE ORIENTED SO THAT THE DOOR IS FACING AWAY FROM TRAFFIC.
5. A #6 BARE SOLID COPPER WIRE SHALL BE REQUIRED TO CONNECT BETWEEN GROUND ROD AND GROUND LUG ON PANEL.

ALTERNATE STEP CONTROLLER FOUNDATION

FOR TYPE 6E CABINETS (SEE LADOTD TCS# 18)

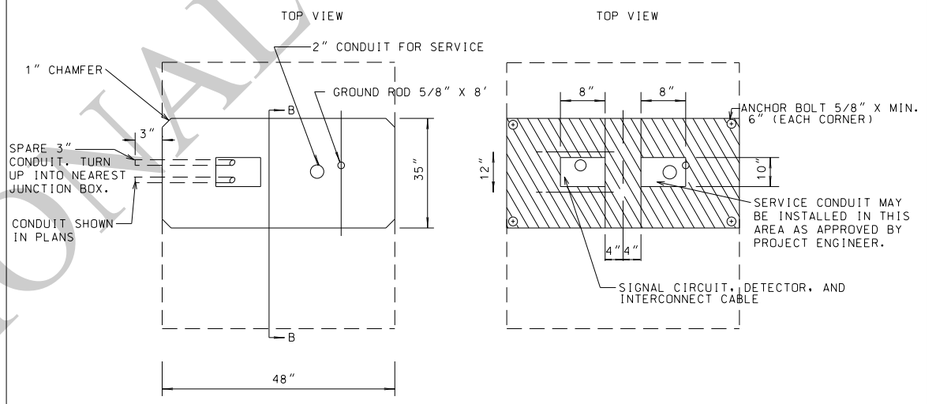

SIDE VIEW (B-B)

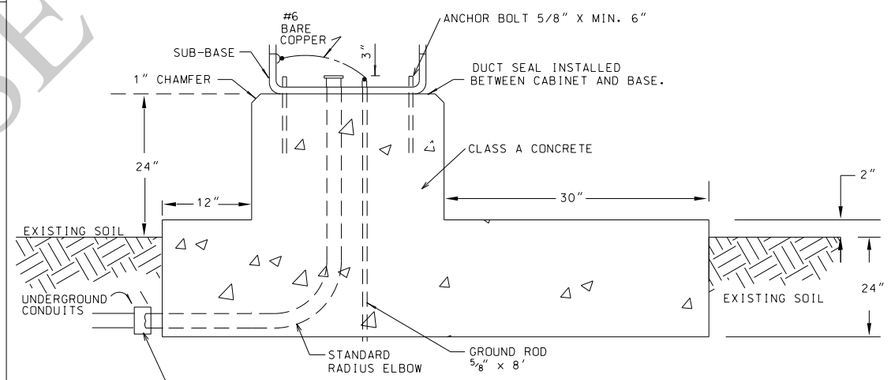

(NOTES FROM CONTROLLER FOUNDATION APPLY)

WOOD POLE MOUNTED FLASHER CONTROLLER SWITCH

(6$^{1}/_{2}$" x 12" x 16")

NOTE: USED FOR FLASHING HAZARD BEACONS AND CONTINUOUS FLASHING SIGNS. THIS ITEM SHALL BE INCLUSIVE WITH ELECTRICAL SERVICE.

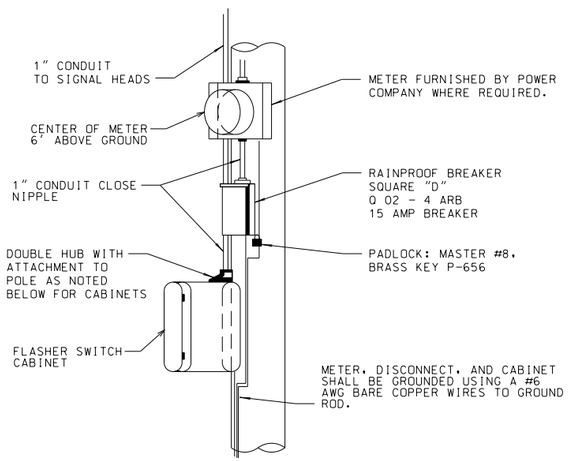

NOTE: ALL EQUIPMENT SHALL BE ATTACHED TO POLE WITH HDG LAG SCREWS.

INFORMATIONAL USE

SHEET NUMBER

PARISH | CONTROL SECTION | STATE PROJECT

DESIGN S. MCCARROLL | DETAIL S. MCCARROLL | REVIEW | SERIES # 14 OF 14
CHECK D. LORIO | CHECK L. WANG

APPROVED BY CHIEF ENGINEER: DATE: Oct. 1, 2025

REVISION OR CHANGE ORDER DESCRIPTION | DATE | NO. | BY

TRAFFIC SIGNAL DETAILS

CONTROLLER MOUNTING AND FOUNDATION DETAILS

TSD-13

DOTD LOUISIANA DEPARTMENT OF TRANSPORTATION & DEVELOPMENT

STANDARD PLAN

GENERAL PROVISIONS

- All temporary traffic control (TTC) devices used shall be in accordance with the Louisiana Standard Specifications for Roads and Bridges, the MUTCD, and shall meet the NCHRP Report 350 or MASH requirements for Test Level 3 devices where applicable.
- Materials used for TTC shall be in accordance with the Louisiana Standard Specifications for Roads and Bridges and, when applicable, the LADOTD AML.
- Placement of TTC devices shall not commence without the approval of the Engineer and until work is about to begin, unless they are covered.
- No lane closures, lane shifts, diversions or detours shall occur without the approval of the Engineer.
- Responsibility is hereby placed upon the contractor for the installation, maintenance and operation of all TTC devices called for in these plans or required by the Engineer for the protection of the traveling public as well as all LADOTD and construction personnel.
- The contractor shall also be responsible for the maintenance of all permanent signs, pavement markings, and traffic signals left in place as essential to the safe movement and guidance of traffic within the project limits unless noted in the plans.
- The DTOE shall serve as a technical advisor to the Engineer for all traffic control matters.
- The Chief Construction Engineer or his appointed designee shall approve all signs and situations not addressed in the plans based on the recommendations of the Project Engineer and the DTOE. All changes shall be noted in all project traffic control diaries.
- The Chief Construction Engineer or his appointed designee shall approve all design speeds of diversions or shifts, if it differs from design plans, based on the recommendations of the Project Engineer and the DTOE.
- All temporary traffic control plans shall comply with the Transportation Management Plan.
- Any additional signs shown in the MUTCD and required by the Engineer shall be installed under Item 713-01-00100.
- Neither work activity nor storage of equipment, vehicles, TMAs, or materials shall occur within the buffer space.
- When a work area has been established on one side of the roadway only, there shall be no conflicting operations or parking on the opposite shoulder within 500 feet of the work area.
- A lighting plan shall be submitted to the Engineer 30 days prior to night work for approval. (See section 713.10 of the Louisiana Standard Specifications for Roads and Bridges.)
- Parking of vehicles or unattended equipment or storage of materials, within the work zone clear zone shall not be permitted unless protected by guardrail or barriers. If the work zone clear zone is not defined on the plan sheets, the Engineer shall verify.
- Immediately upon removal of existing guardrail, the contractor shall install and maintain an NCHRP Report 350 or MASH approved device to protect the blunt end of the bridge or column until new guardrail is installed. After removal of the existing guardrail, new guardrail should be installed within seven (7) days. On non-NHS routes with shoulders less than 8 feet wide: If an NCHRP 350 Report Test Level 3 or MASH device is required but the field conditions of the roadway cannot support a Test Level 3 device, then a Test Level 2 device can be substituted in its place upon approval by the Engineer. If utilized, a TMA is allowed for a maximum of 72 hours.
- All costs associated with temporary crash devices are to be included under the appropriate NS-700 pay item.
- Sight distance should be considered when placing traffic control devices.
- On all mainline Interstates, a minimum of 1.5 feet of paved shoulder on the left and right side shall be maintained at all times.
- On Interstates, a minimum of 11 foot lanes shall be maintained. On all other roadways, a 10 foot minimum travel lane should be maintained where practical.
- TTC Standards are not drawn to scale.
- The contractor shall develop an internal traffic control plan approved by the Engineer prior to each phase.
- Truck restrictions such as (but not limited to) restricting lanes, oversize loads or times of travel, may be required for narrow lanes or other field conditions.
- Temporary concrete barrier shall be placed on a paved surface. This paved surface should follow current design criteria used for paved embankment widening for guardrails.
- Flare rates for temporary concrete barriers should follow the most current guidance in the AASHTO Roadside Design Guide.

PAVEMENT MARKINGS (see AML)

- All pavement markings within the limits of the project or adjacent to the project limits that are in conflict with the project signing or the required traffic movements shall be removed from the pavement by blast cleaning or grinding. (Existing striping shall not be painted over with black paint or covered with tape.)
- If special pavement markings are needed, they shall be reflectorized, removable and accompanied by the proper signage.
- Temporary Raised Pavement Markers may be added to supplement temporary striping in areas of transition, in tapers, in diversions and in other areas of need as shown in the plans or as directed by the Engineer.
- Temporary markings installed in the permanent configuration shall comply with LADOTD pavement marking standard plans, MUTCD and/or the permanent striping plans.

PORTABLE CHANGEABLE MESSAGE SIGNS (PCMS)

- PCMS shall be used on all Interstate Highways. PCMS shall be used on all other roadways (where space is available) with an ADT greater than 20,000.
- When used in advance of a lane closure or a lane shift, the PCMS should be placed on the right hand side of the road a minimum distance of 2 miles in advance of the taper for interstates and to be determined by the Engineer on other highways.
- For interstates and multi-lane highways, if vehicles are queuing beyond the 2 mile PCMS, an additional PCMS should be placed on the right hand side of the road approximately 5 miles in advance of the taper or at the end of the queue, whichever is greater.
- PCMS messages shall be approved by the Engineer. Messages shall be no more than 3 lines and 2 screens.
- Messages shall display only traffic operational, regulatory, warning, and guidance information. PCMS messages shall not display advertising or safety messages. Messages should only convey information concerning the problem/situation, location, and recommended driver action.
- PCMS should be placed as far from the traveled lane as possible. They shall be shielded by guardrail or barriers. If this is not possible they shall be delineated with a min. 3 drum taper spaced at 20ft with a 4th drum alongside the PCMS.
- If the PCMS encroaches on the improved shoulder then the contractor shall install a shoulder closure.
- When the PCMS is not displaying a work zone appropriate message pertaining to the ongoing construction project it shall be shielded by guard rail or barriers, or removed from the work zone clear zone.

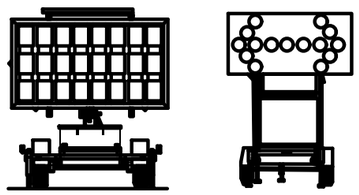

ALL TTC STANDARDS SHOW MINIMUM CONSTRUCTION SIGNING.
ALL SITUATIONS SHALL BE REVIEWED AND/OR DESIGNED BY THE ENGINEER.
CONTRACTORS ARE RESPONSIBLE FOR COMPLYING WITH ALL TTC STANDARDS.

SPEED LIMITS

- The Engineer may approve a 10 mph drop in the speed limit for posted speeds of 45 mph or greater and for any construction, maintenance or utility operation that requires one or more of the following:
  - (A) The condition of the traveled way is degraded due to milled surfaces or uneven travel lane lines greater than 1.5 inches.
  - (B) Work is in progress in the immediate vicinity of the travel way requiring lane closures or lane width reductions less than 11 feet.
  - (C) Workers present on the shoulder within 2 feet of the edge of the traveled way without barrier protection.
- The reduced speed zone shall only apply to those portions of the project limits affected. The Engineer may allow SPEED LIMIT WHEN FLASHING signs to supplement reduced speed zones.
- If the speed limit is reduced, speed limit signs shall be placed:
  - (A) beyond major intersections;
  - (B) at one mile intervals in rural areas;
  - (C) at half mile intervals in urban areas.
- At the end of the reduced speed zone, a speed limit sign displaying the original speed limit prior to construction shall be installed.
- For all other speed limit reductions not listed above, the Project Engineer and the DTOE shall recommend the speed reduction to the Chief Construction Engineer or his appointed designee for approval.
- If the speed limit is reduced more than 10 mph, placement of the signs shall be re-evaluated according to the MUTCD.

FLASHING ARROW BOARDS

- All Flashing Arrow Boards shall be 4 feet by 8 feet and Type C.
- Flashing Arrow Boards should be placed on the shoulder. When there is no shoulder or median area, the arrow board shall be placed within the closed lane behind the channelizing devices and as close to the beginning of the taper as practical.
- Flashing arrow boards shall be delineated with retroreflective TTC devices.
- At no time shall the arrow board encroach in the traveled way. When Flashing Arrow Board signs are not being used, they shall be shielded by guard rail or barriers, or removed.
- Arrow boards shall only be used for lane reduction tapers and shall not be used for lane shifts.

ABBREVIATIONS

AASHTO	American Association of State Highway and Transportation Officials
ADT	Average Daily Traffic
AGC	Associated General Contractors of America
AML	Approved Materials List
ANSI	American National Standards Institute
ATSSA	American Traffic Safety Services Association
B.O.P.	Beginning of Project
DTOE	District Traffic Operations Engineer
E.O.P.	End of Project
LADOTD	Louisiana Department of Transportation and Development
MASH	AASHTO Manual for Assessing Safety Hardware
MUTCD	Manual on Uniform Traffic Control Devices
NCHRP	National Cooperative Highway Research Program
NHS	National Highway System
PCMS	Portable Changeable Message Sign
TMA	Truck Mounted Attenuator
TMC	Traffic Management Center
TTC	Temporary Traffic Control
TTC Standards	Temporary Traffic Control Standard Plans

FOR INFORMATIONAL PURPOSES ONLY

SHEET NUMBER

PARISH | CONTROL SECTION | STATE PROJECT

DESIGN B. BOUCHER | DETAIL | REVIEW | SERIES *
CHECK M. RILOVICH | CHECK

APPROVED BY CHIEF ENGINEER: DATE: Feb. 7, 2025

NO.	DATE	BY
1	4-3-24	BRB

BARRIER INFORMATION AND MINOR CORRECTIONS
REVISION OR CHANGE ORDER DESCRIPTION

STATE OF LOUISIANA

TEMPORARY TRAFFIC CONTROL
GENERAL NOTES SHEET

TTC-00 (A)

DOTD
LOUISIANA DEPARTMENT OF TRANSPORTATION & DEVELOPMENT
TRAFFIC ENGINEERING

SIGNS

- All signs used for temporary traffic control shall follow the plans, the LADOTD TTC Standards and the MUTCD.
- Signs shown in the TTC illustrations are typical and may vary with each specific condition.
- One Type B High Intensity light shall be used to supplement the first sign (or pair of signs) that gives warning about a lane closure during nighttime operations (See AML).
- Mesh rollup signs shall not be allowed on any project.
- Contractor shall use caution not to damage existing signs which remain in place. Any LADOTD signs damaged by work operations shall be replaced by the contractor under item 713-01-00100.
- All signs (permanent and temporary) shall be removed or completely covered with a strong, lightweight, opaque material when no longer applicable. (Burlap is not an acceptable material to cover signs).
- At no time shall signs warning against a particular operation be left in place once the operation has been completed or where the condition has been removed.
- Warning signs used for temporary traffic controls shall meet the following guidelines unless otherwise noted in the plans:
  - (A) size shall be 48 inches by 48 inches.
  - (B) see the Louisiana Standard Specifications for Roads and Bridges and the AML for sheeting information.
  - (C) lateral distance of signs shall be a minimum of 6 feet from the edge of shoulder or edge of pavement if no shoulder exists and 2 feet from the back of curb in urban areas (see diagram).
- When portable sign frames are not in use, they shall be moved to an area inaccessible to traffic and not visible to the driver.
- Left side mounted signs will not be required for roadways with a center left turn lane and for undivided roadways.
- Vinyl roll up signs and 1 foot portable sign stands may be used if work zone is in place for 3 days or less. Signs or stands may not be used if there are more than 2 lanes in each direction and if signs do not meet all size, color, retroreflectivity and NCHRP 350 Report or MASH requirements.
- All signs shall be visible to the drivers (i.e. no obstructions such as on street parking or other traffic control devices shall block the sign).
- On divided highways, signs shall be placed on the right and the left as shown on the TTC standards.
- Sign posts:
  - -Signs measuring 10 square feet or less shall be mounted on 1 rigid post
  - -Signs over 10 square feet shall be mounted on 2 rigid posts
  - -Signs over 20 square feet shall be mounted on at least 3 rigid posts
- Rigid sign supports shall be driven to a minimum depth of 3 feet. (If splicing is required, see Allowable Lap Splice U-channel Post.)
- For sign height, see the Rural and Urban diagrams:

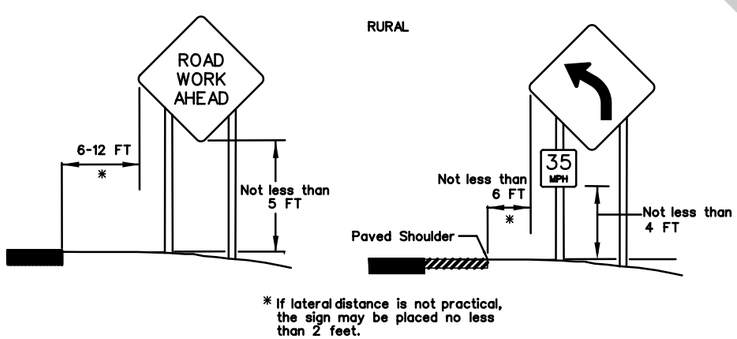

* If lateral distance is not practical, the sign may be placed no less than 2 feet.

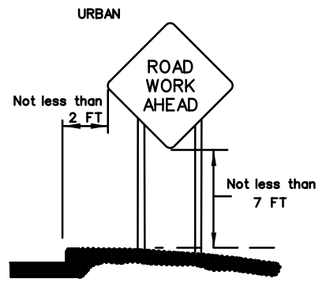

LANE CLOSURES

- All proposed lane, road or shoulder closures shall be reviewed by the DTOE and approved by the Engineer.
- Two lane, two-way highways shall have a maximum work area of two miles; all other roadways shall have a four mile maximum work area.
- A queue analysis shall be performed prior to approval of lane closures on all Interstates according to Section 6A.1 of the Traffic Engineering Manual.
- Closure plans and times shall be turned in to the Engineer for review according to the following:
  - (A) 5 working days minimum if traffic control plan has been approved or is contained in the plans.
  - (B) 10 working days minimum and a traffic control plan must be submitted for lane closures not addressed in the plans.
- Weekly updates to the DTOE, Project Engineer, the LADOTD TMC operator and the regional TMC operator (if applicable) will be required for all ongoing lane closures to update the closure status.
- Daily updates to the DTOE, Project Engineer and TMC operator (if applicable) will be required for all projects where active closures are in place.

FLAGGERS

- All flaggers shall be qualified.
- The contractor shall be responsible for training or assuring that all flaggers are qualified to perform flagging duties.
- A Qualified Flagger is one that has completed courses such as those offered by ATSSA or other courses approved by the LADOTD Work Zone Task Force. The contractor shall be responsible for getting the flagger course approved.
- When utilized, a flagger shall use a minimum 18 inch octagonal shape sign on a minimum 6 foot stop/slow paddle and wear ANSI Class 2 Lime Green vest during day time operations and ANSI Class 3 Lime Green ensemble during night operations.
- In all flagging operations, the flagger must be visible from the flagger advance warning sign.
- Flaggers shall not be used on the Interstate.

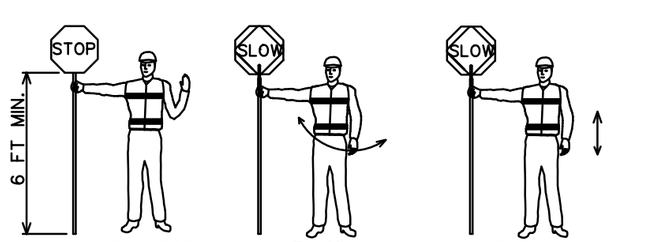

To STOP Traffic

Traffic Proceed

To Alert & SLOW Traffic

Use of Hand Sign

Use of Hand Sign

PEDESTRIAN CONSIDERATIONS

- If the TTC zone affects the movement of pedestrians, adequate pedestrian access and walkways shall be provided either through the TTC zone or a designated alternate route.
- Pedestrians should be provided with a convenient and accessible path that replicates as nearly as practical the most desirable characteristics of the existing sidewalk(s) or footpath(s).
- Advance notification of sidewalk closures shall be provided by the maintaining agency.
- No storage of construction materials, equipment, and/or vehicles will be permitted on permanent or temporary bicycle, pedestrian, or transit facilities for any duration of time.

REFERENCES

- The contractor shall be responsible for understanding all rules and requirements in the current edition of the following documents:

1) Louisiana Standard Specifications for Roads and Bridges. http://www.dotd.la.gov/Inside_LaDOTD/Divisions/Engineering/Standard_Specifications
2) Manual on Uniform Traffic Control Devices for Streets and Highways (MUTCD). http://mutcd.fhwa.dot.gov/
3) LADOTD Approved Materials List (AML) Manual. http://wwwsp.dotd.la.gov/Inside_LaDOTD/Divisions/Engineering/Materials_Lab/Pages/Menu_QPL.aspx
4) LADOTD Traffic Engineering Manual http://wwwsp.dotd.la.gov/Inside_LaDOTD/Divisions/Engineering/Traffic_Engineering/Misc%20Documents/Traffic%20Engineering%20Manual.pdf
5) National Cooperative Highway Research Program (NCHRP) Report 350: "Guidelines for Work Zones Traffic Control Devices". http://onlinepubs.trb.org/Onlinepubs/nchrp/nchrp_rpt_350-a.pdf
6) NCHRP Report 475: "A Procedure for Assessing and Planning Nighttime Highway Construction and Maintenance". http://onlinepubs.trb.org/Onlinepubs/nchrp/nchrp_rpt_475.pdf
7) NCHRP Report 476: "Guidelines for Design and Operation of Nighttime Traffic Control for Highway Maintenance". http://onlinepubs.trb.org/Onlinepubs/nchrp/nchrp_rpt_476.pdf
8) NCHRP Report 498: "Illumination Guidelines for Nighttime Highway Work". http://onlinepubs.trb.org/Onlinepubs/nchrp/nchrp_rpt_498.pdf
9) American Association of State Highway and Transportation Officials (AASHTO) Roadside Design Guide.
10) American Traffic Safety Services Association (ATSSA) Quality Guidelines for Work Zone Traffic Control Devices and Features.
11) U.S. Department of Transportation Federal Highway Administration Traffic Control Handbook for Mobile Operations at Night. http://www.dot.state.il.us/blr/1023.pdf

ALL TTC STANDARDS SHOW MINIMUM CONSTRUCTION SIGNING.
ALL SITUATIONS SHALL BE REVIEWED AND/OR DESIGNED BY THE ENGINEER.
CONTRACTORS ARE RESPONSIBLE FOR COMPLYING WITH ALL TTC STANDARDS.

FOR INFORMATIONAL USE

SHEET NUMBER

PARISH | CONTROL SECTION | STATE PROJECT

DESIGN B. BOUCHER | DETAIL | REVIEW | SERIES #
CHECK M. RILOVICH | CHECK

APPROVED BY CHIEF ENGINEER: DATE: Feb. 7, 2025

NO.	DATE	REVISION OR CHANGE ORDER DESCRIPTION	BY
1	4-3-24	STORAGE NEAR SIDEWALKS AND MINOR CORRECTIONS	BRB

STATE OF LOUISIANA DEPARTMENT OF TRANSPORTATION AND DEVELOPMENT

TEMPORARY TRAFFIC CONTROL
GENERAL NOTES SHEET

TTC-00 (B)

DOTD LOUISIANA DEPARTMENT OF TRANSPORTATION & DEVELOPMENT

TRAFFIC ENGINEERING

CHANNELIZING DEVICES

- The following devices may be used as channelizing devices: Tubular Markers, Vertical Panels, Cones, Drums and Super Cones.
- 28 inch traffic cones are not allowed on:
  1) Interstates
  2) Highways with speeds greater than 40 mph.
- During nighttime operations, 28 inch and 36 inch cones are not allowed.
- Retroreflective material pattern used on super cones shall match that used on drums.

- Tangent Areas:
  - A) Standard Spacing: See Standard Device Spacing and Buffer Space table.
  - B) Daylight Operations: Drums and super cones are spaced at standard spacing. All other devices are at ½ standard spacing.
  - C) Nighttime Operations: Drums and supercones at standard spacing are the only devices allowed.

- Taper Areas:
  - A) Standard Spacing: See Standard Device Spacing and Buffer Space table.
  - B) Daylight Operations: Drums are spaced at standard spacing. All other devices are ½ standard spacing.
  - C) Nighttime Operations: Drums (at standard spacing) are the only devices allowed.
  - Q D) Downstream Locations & Flaggers: Drums or supercones at 20' max spacing. The length of taper shall be between 50' - 100' with a minimum of 6 devices.
- Type C steady burn lights shall be used on all channelizing devices in the taper as well as the first two devices in the tangent at night, (see the AML).
- Typical channelizing device lateral placement (do not include when it is used as a divider for opposing directions of traffic) shall be 2 feet off the lane line in the closed lane or shoulder.
- Devices may be adjusted laterally to accomodate ongoing work in the immediate vicinity but must be returned to the closed lane after the work activity has moved.
- Channelizing devices on the lane line shall be of the same type.
- Channelizing devices in each taper shall be of the same type.

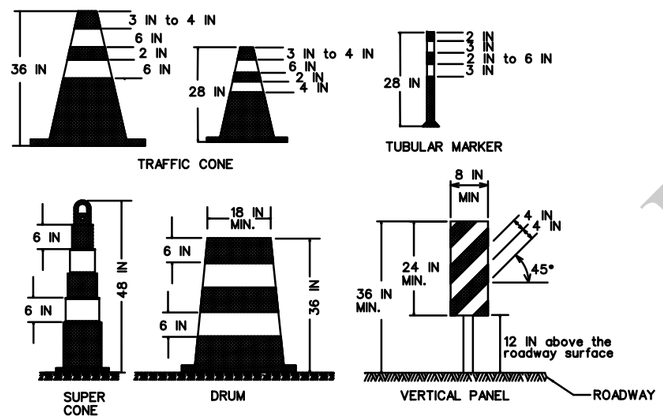

ALL TTC STANDARDS SHOW MINIMUM CONSTRUCTION SIGNING.
ALL SITUATIONS SHALL BE REVIEWED AND/OR DESIGNED BY THE ENGINEER.
CONTRACTORS ARE RESPONSIBLE FOR COMPLYING WITH ALL TTC STANDARDS.

TYPE III BARRICADES

- Q Only Type III Barricades shall be used in the roadway or shoulder. All barricades shall use Type 3 High Intensity Sheeting on both sides of the barricade.
- All barricades shall be a minimum of 8 feet in length and must meet NCHRP Report 350 or MASH requirements.
- When used for overnight closures, two Type B High Intensity Lights shall supplement all barricades that are placed in a closed lane or that extend across a highway. Two Type A Low Intensity Lights may be used in urban areas if approved by the Engineer (See AML).
- When signs and lights are to be mounted to a barricade, they must meet NCHRP Report 350 or MASH requirements.
- A truck with a TMA may be substituted for a barricade when workers are present.
- Barricades shall be placed:
  - (A) at the beginning of a closed lane or shoulder and at 1,000 foot intervals where no active work is ongoing and the lane must remain closed. A minimum of 2 barricades shall be placed if the lane or shoulder closure is less than 2,000 feet. (One barricade shall be placed at the beginning of the lane closure after the buffer space and one shall be placed in the middle of the lane closure.)
  - (B) before each or group of unfilled holes or holes filled with temporary material.
  - (C) before uncured concrete.
  - (D) in the closed lane on each side of every intersection and crossover. (Do not block sight distance.)
  - (E) in front of piles of material (dirt, aggregate, broken concrete), culverts and equipment which is near the work zone.

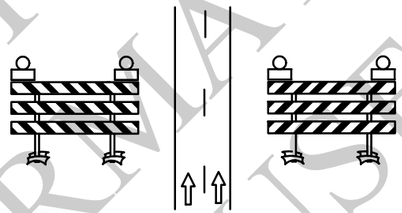

TTC for DROP-OFFS

NON-INTERSTATE

Average Drop-off	Current Posted Speed (Prior to Construction)	
	> 45 MPH	≤ 45 MPH
≤ 3 IN	Low Shoulder Sign (Optional)	Low Shoulder Sign (Optional)
> 3 IN ≤ 6 IN	Shoulder Drop Off Sign & Edge Lines or Shoulder Drop Off Sign & Channelizing Device	Shoulder Drop Off Sign
> 6 IN ≤ 10 IN	No Shoulder Sign, Edge Lines & Vertical Panel	No Shoulder Sign & Channelizing Device
> 10 IN	Concrete Barrier (if drop off is < 12 FT from edge of travel lane) & Edge Lines	No Shoulder Sign & Vertical Panel

INTERSTATE

Average Drop-off	
≤ 2 IN	Low Shoulder Sign (Optional)
> 2 IN ≤ 6 IN	Shoulder Drop Off Sign & Edge Lines or Shoulder Drop Off Sign & Channelizing Device
> 6 IN	Concrete Barrier (if drop off is < 12 FT from edge of travel lane), Shoulder Drop Off Sign, & Edge Lines

- If a portable concrete barrier will be required then the deflection shall be considered in the design.
- For Interstate ramps, refer to non-Interstate drop offs.

STANDARD DEVICE SPACING AND BUFFER SPACE

SPEED LIMIT (prior to construction)	MERGING TAPER LENGTH (L) Lane Width (FT)				STANDARD DEVICE SPACING IN FEET		BUFFER SPACE
MPH	9	10	11	12	Along Taper	Along Tangent	FT
25	94	105	115	125	20	40	155
30	135	150	165	180	30	60	200
35	184	205	225	245	35	70	250
40	240	267	294	320	40	80	305
45	405	450	495	540	40	80	360
50	450	500	550	600	40	80	425
55	495	550	605	660	40	80	495
60	540	600	660	720	40	80	570
65	585	650	715	780	40	80	645
70	630	700	770	840	40	80	730
75	675	750	825	900	40	80	820

SPEED LIMIT (prior to construction)	SHIFTING TAPER LENGTH (1/2)(L) Lane Shift (FT)						STANDARD DEVICE SPACING IN FEET		BUFFER SPACE
MPH	2	4	6	8	10	12	Along Taper	Along Tangent	FT
25	11	21	32	42	52	63	20	40	155
30	15	30	45	60	75	90	30	60	200
35	21	41	62	82	102	123	35	70	250
40	27	54	80	107	134	160	40	80	305
45	45	90	135	180	225	270	40	80	360
50	50	100	150	200	250	300	40	80	425
55	55	110	165	220	275	330	40	80	495
60	60	120	180	240	300	360	40	80	570
65	65	130	195	260	325	390	40	80	645
70	70	140	210	280	350	420	40	80	730
75	75	150	225	300	375	450	40	80	820

SPEED LIMIT (prior to construction)	SHOULDER TAPER LENGTH (1/3)(L) Shoulder Width (FT)						STANDARD DEVICE SPACING IN FEET		BUFFER SPACE
MPH	2	4	6	8	10	12	Along Taper	Along Tangent	FT
25	7	14	21	28	35	42	20	40	155
30	10	20	30	40	50	60	30	60	200
35	14	28	41	55	68	82	35	70	250
40	18	36	54	72	89	107	40	80	305
45	30	60	90	120	150	180	40	80	360
50	34	67	100	134	167	200	40	80	425
55	37	74	110	147	184	220	40	80	495
60	40	80	120	160	200	240	40	80	570
65	44	87	130	174	217	260	40	80	645
70	47	94	140	187	234	280	40	80	730
75	50	100	150	200	250	300	40	80	820

- See MUTCD for taper formulas.
- ALLOWABLE LAP SPLICE FOR U-CHANNEL POST

U-Channel posts may be spliced where long lengths are required. The upper section shall overlap the lower section by at least 24 inches. The bottom edge of the upper section of the splice shall be a minimum of 24 inches above the ground. The spliced sections shall be secured with at least four 5/16 inch diameter hex bolts spaced equally along the splice.

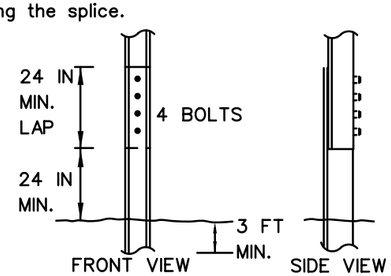

PRELIMINARY INFORMATIONAL USE

SHEET NUMBER
PARISH | CONTROL SECTION | STATE PROJECT
DESIGN B. BOUCHER | CHECK M. RILOVICH | DETAIL | CHECK | REVIEW | SERIES #
APPROVED BY CHIEF ENGINEER: DATE: Feb. 7, 2025
BY | BRB
NO. | DATE | REVISION OR CHANGE ORDER DESCRIPTION
1 | 4-3-24 | DOWNSTREAM TAPERS AND MINOR CORRECTIONS

TEMPORARY TRAFFIC CONTROL
GENERAL NOTES SHEET
TTC-00 (C)

DOTD LOUISIANA DEPARTMENT OF TRANSPORTATION & DEVELOPMENT
TRAFFIC ENGINEERING

SEE TTC-00(A), TTC-00(B), AND TTC-00(C)

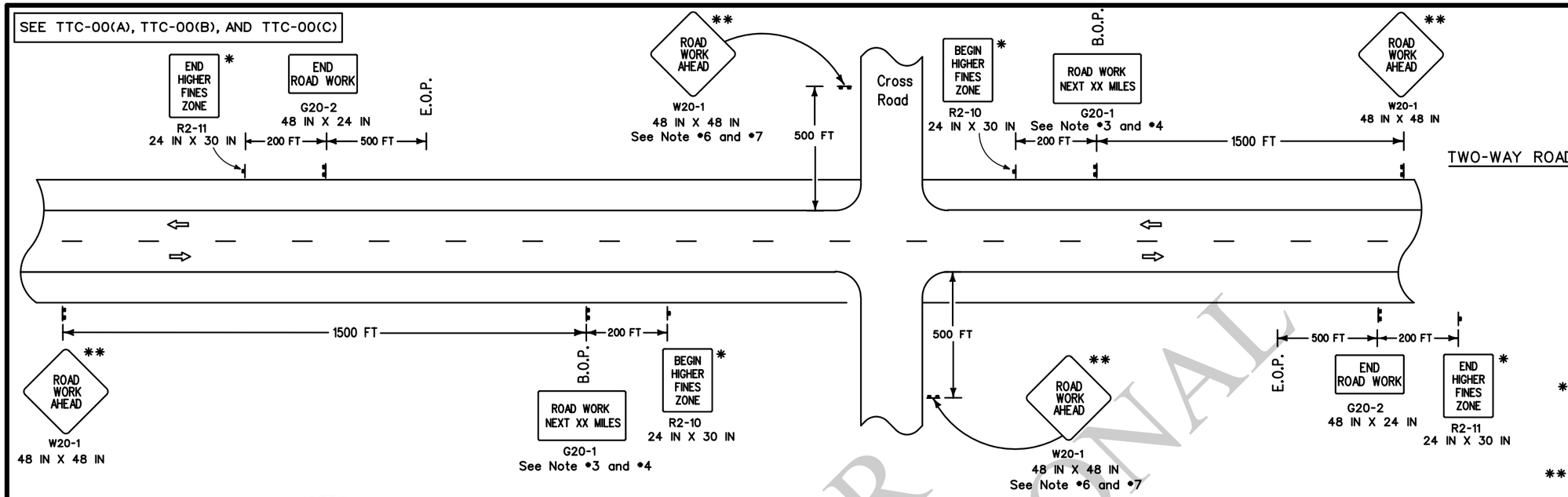

* For divided roadways with speeds ≥ 50 mph use larger sign, 36 IN X 48 IN.

** Any sign of the W20-1 series may be used.

NOTES

This sheet shall be used with the Temporary Traffic Control General Notes Sheets TTC-00(A), TTC-00(B), TTC-00(C), and other Temporary Traffic Control Sheets as appropriate.

1. This layout represents the minimum traffic controls required for placement of "Road Work Next XX Miles" and "End Road Work" signs.
2. This layout does not replace other TTC Standard Sheets, but is intended as a supplement to the required signing.
3. The distance on the "Road Work Next XX Miles" sign shall be rounded up to the nearest whole mile. This sign shall be placed at the Beginning of Project (B.O.P.) limits. This sign may be omitted if work zone is less than 0.5 miles.
4. The "Road Work Next XX Miles" sign shall be a minimum of 60 inches by 36 inches for all multi-lane roadways and a minimum of 48 inches by 24 inches for two-lane roadways unless otherwise noted.
5. The "End Road Work" sign shall be placed 500 feet past the End of Project (E.O.P.) limits.
6. If "Road Work Ahead" sign is used on a cross road to warn of road work on another route, then "End Road Work" sign is not required.
7. When projects are separated by less than 1 mile, they shall be signed as one project; this may require coordination.

LEGEND

- Traffic Sign
- ⇨ Direction of Travel

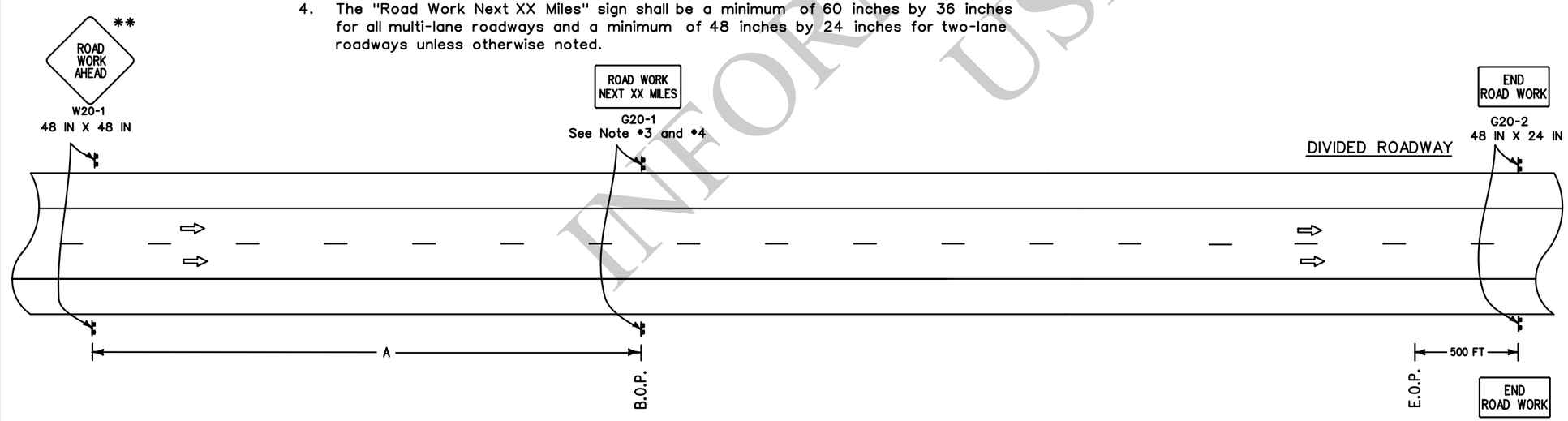

SPEED LIMIT (prior to construction)	SPACING 'A'
≤ 40 mph	1500 FT
45 mph	2640 FT
> 45 mph	5280 FT

- Sign spacing to be adjusted for Horizontal and Vertical curves.
- For work outside of the traveled way, see TTC-01 and TTC-02.

ALL TTC STANDARDS SHOW MINIMUM CONSTRUCTION SIGNING.
ALL SITUATIONS SHALL BE REVIEWED AND/OR DESIGNED BY THE ENGINEER.
CONTRACTORS ARE RESPONSIBLE FOR COMPLYING WITH ALL TTC STANDARDS.

FOR INFORMATIONAL USE

SHEET NUMBER | PARISH | CONTROL SECTION | STATE PROJECT

DESIGN B. BOUCHER | CHECK M. RILOVICH | DETAIL | CHECK | REVIEW | SERIES *

APPROVED BY CHIEF ENGINEER: Feb. 7, 2025 DATE:

BY BRB

NO. | DATE 4-3-24 | REVISION OR CHANGE ORDER DESCRIPTION
MINOR CORRECTIONS

STATE OF LOUISIANA

TEMPORARY TRAFFIC CONTROL
LAYOUT FOR PLACEMENT OF ROAD WORK NEXT XX MILES AND END ROAD WORK SIGNS

TTC-00 (D)

DOTD LOUISIANA DEPARTMENT OF TRANSPORTATION & DEVELOPMENT

TRAFFIC ENGINEERING

SEE TTC-00(A), TTC-00(B) AND TTC-00(C)

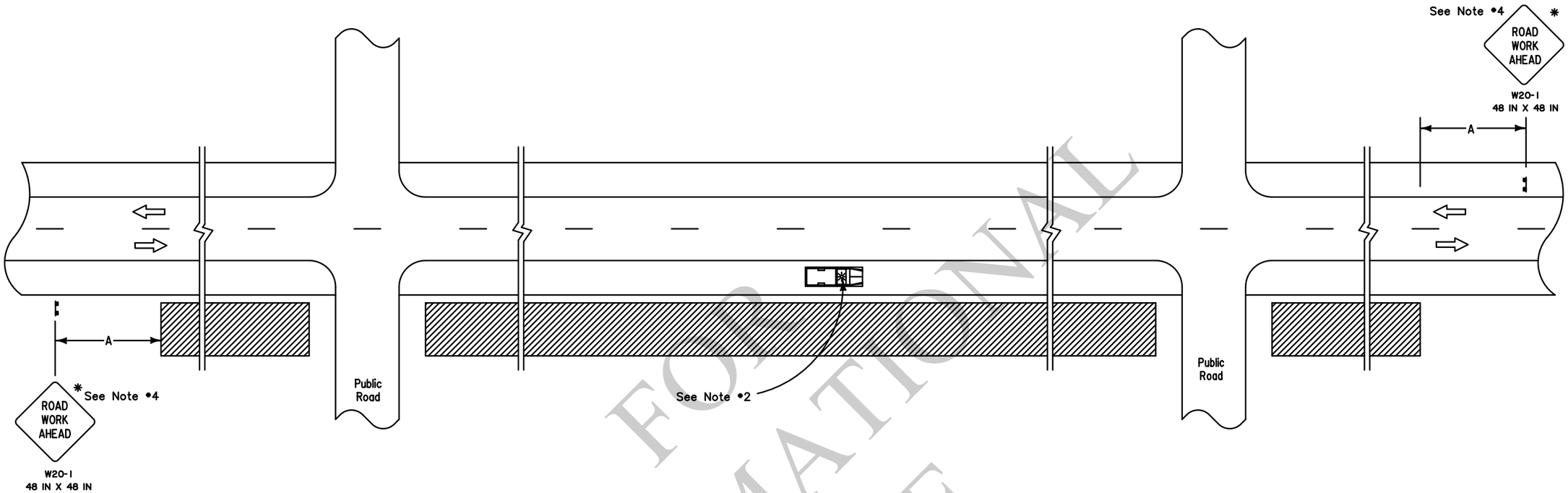

LEGEND

- Traffic Sign
- Work Area
- Direction of Travel
- ⊙ Truck with Green/Amber Light

SPEED LIMIT (prior to construction)	SPACING
	'A'
≤ 40 mph	500 FT
45-50 mph	1000 FT
≥ 55 mph	1500 FT

NOTES

This sheet shall be used with the Temporary Traffic Control General Notes Sheets TTC-00(A), TTC-00(B) and TTC-00(C).

1. This layout represents the minimum traffic controls required for workers and equipment operating more than 15 feet from the travel way.

⊙ 2. If the operation results in equipment or other vehicles being parked closer than 15 feet to the travel way, but not within the roadway, each vehicle shall have an green/amber light.

3. When a work area has been established on one side of the roadway only, there shall be no parking on the opposite shoulder within 500 feet of the work area.

4. Other signs may be used in place of the "Road Work Ahead" sign, such as W21-8 (Mowing), W21-7 (Utility), or W21-6 (Survey) when applicable.

* Any sign of the W20-1 series may be used.

ALL TTC STANDARDS SHOW MINIMUM CONSTRUCTION SIGNING.
ALL SITUATIONS SHALL BE REVIEWED AND/OR DESIGNED BY THE ENGINEER.
CONTRACTORS ARE RESPONSIBLE FOR COMPLYING WITH ALL TTC STANDARDS.

FOR INFORMATIONAL USE

SHEET NUMBER

PARISH | CONTROL SECTION | STATE PROJECT

DESIGN B. BOUCHER | CHECK M. RILOVICH | DETAIL | CHECK | REVIEW | SERIES *

APPROVED BY CHIEF ENGINEER: DATE: Feb. 7, 2025

BY BRB

NO. DATE REVISION OR CHANGE ORDER DESCRIPTION
0 4-3-24 MINOR CORRECTIONS

STATE OF LOUISIANA DEPARTMENT OF TRANSPORTATION AND DEVELOPMENT

TEMPORARY TRAFFIC CONTROL
FOR WORK GREATER THAN 15 FEET FROM THE TRAVELED WAY

TTC-01

DOTD LOUISIANA DEPARTMENT OF TRANSPORTATION & DEVELOPMENT

TRAFFIC ENGINEERING

SEE TTC-00(A), TTC-00(B) AND TTC-00(C)

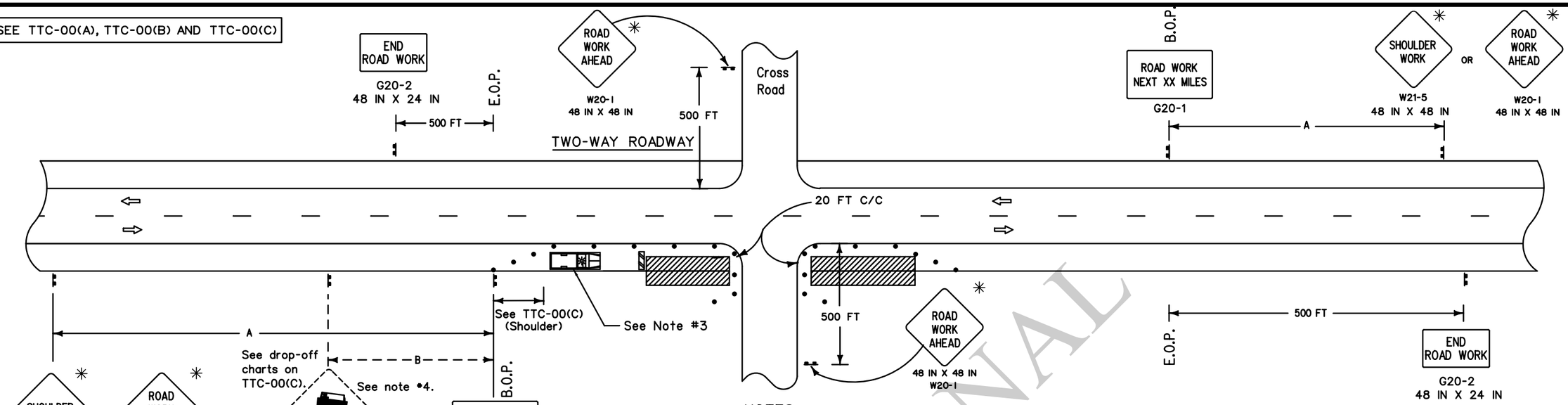

SPEED LIMIT (prior to construction)	SPACING 'A'	SPACING 'B'
≤ 40 mph	500 FT	250 FT
45-50 mph	1000 FT	350 FT
≥ 55 mph	1500 FT	500 FT
Expressway/Interstate	2500 FT	1000 FT

- See TTC-00(C) for minimum taper length and maximum device spacing for shoulder closure tapers.
- If horizontal curve radius is less than 300 feet, device spacing shall be 25 feet.

DIVIDED ROADWAY

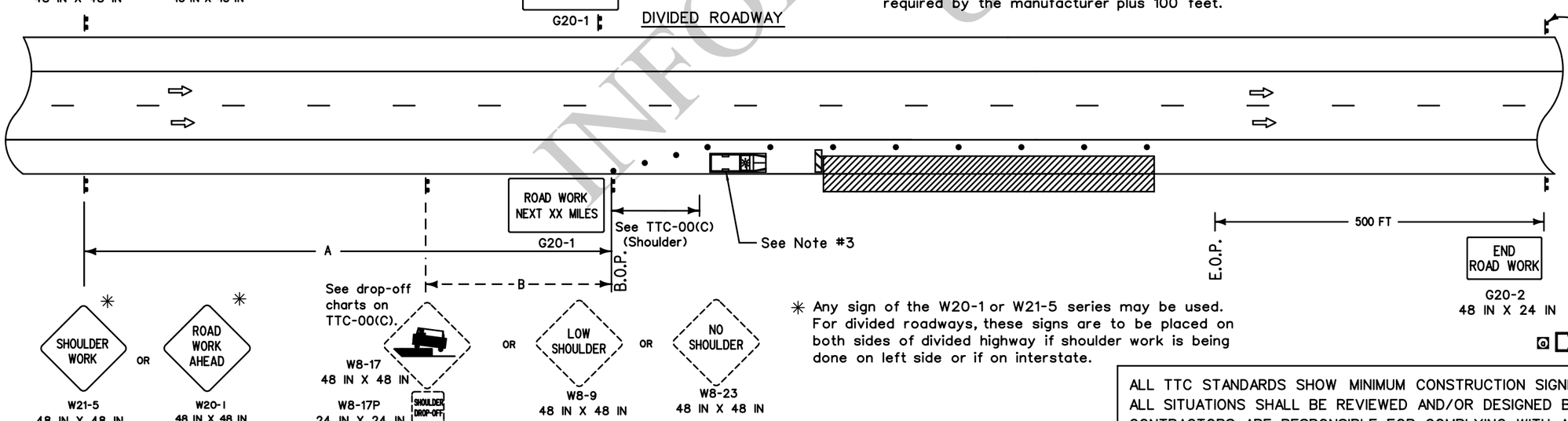

NOTES

This sheet shall be used with the Temporary Traffic Control General Notes Sheets TTC-00(A), TTC-00(B), TTC-00(C)

1. This layout represents the minimum traffic controls required for workers and equipment operating less than 15 feet from the traveled way for more than one hour. Less than one hour, see figure TA-4 of the MUTCD.
2. No signs or barricades are required for equipment operating or work in progress greater than 15 feet from the traveled way. (See TTC-01).
3. Work or equipment confined to a spot location (less than 200 feet) shall be marked by channelizing devices spaced at 25 feet or by a vehicle with a green/amber light visible to traffic. Work extending more than 200 feet of roadway length shall be marked with appropriate devices spaced as noted on TTC-00(C).
4. Applicable drop-off sign options are defined on TTC-00(C).
5. The distance on the "Road Work Next XX Miles" sign shall be rounded up to the nearest whole mile. This sign shall be placed at the Beginning of Project (B.O.P.) limits. This sign may be omitted if work zone is less than 0.5 miles.
6. A vehicle with a flashing green/amber light and a truck mounted attenuator shall be used on all shoulders of all interstates, as well as all roadways with an ADT greater than 20,000 and a pre-construction speed greater than or equal to 40 mph. This vehicle shall move with work operations not to exceed the roll-ahead distance required by the manufacturer plus 100 feet.

✳ Any sign of the W20-1 or W21-5 series may be used. For divided roadways, these signs are to be placed on both sides of divided highway if shoulder work is being done on left side or if on interstate.

LEGEND

- Traffic Sign
- Channelizing Devices
- Type III Barricades
- Work Area
- Direction of Travel
- Truck with Green/Amber Light

ALL TTC STANDARDS SHOW MINIMUM CONSTRUCTION SIGNING.
ALL SITUATIONS SHALL BE REVIEWED AND/OR DESIGNED BY THE ENGINEER.
CONTRACTORS ARE RESPONSIBLE FOR COMPLYING WITH ALL TTC STANDARDS.

INFORMATIONAL USE

SHEET NUMBER | PARISH | CONTROL SECTION | STATE PROJECT

DESIGN B. BOUCHER | CHECK M. RILOVICH | DETAIL | CHECK | REVIEW | SERIES #

APPROVED BY CHIEF ENGINEER: DATE: Feb. 7, 2025

BY BRB

REVISION OR CHANGE ORDER DESCRIPTION
MINOR CORRECTIONS

NO. DATE
4-3-24

TEMPORARY TRAFFIC CONTROL
LAYOUT FOR WORK LESS THAN 15 FEET FROM THE TRAVELED WAY

TTC-02

DOTD LOUISIANA DEPARTMENT OF TRANSPORTATION & DEVELOPMENT
TRAFFIC ENGINEERING

SEE TTC-00(A), TTC-00(B), TTC-00(C), AND TTC-00(D)

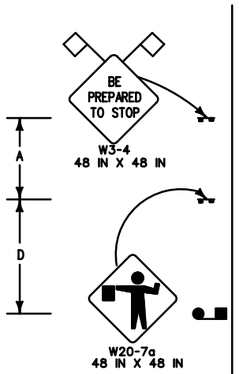

For use when work area is less than or equal to 500 feet from nearest crossroad travel lane, but work area does not encroach crossroad travel lanes.

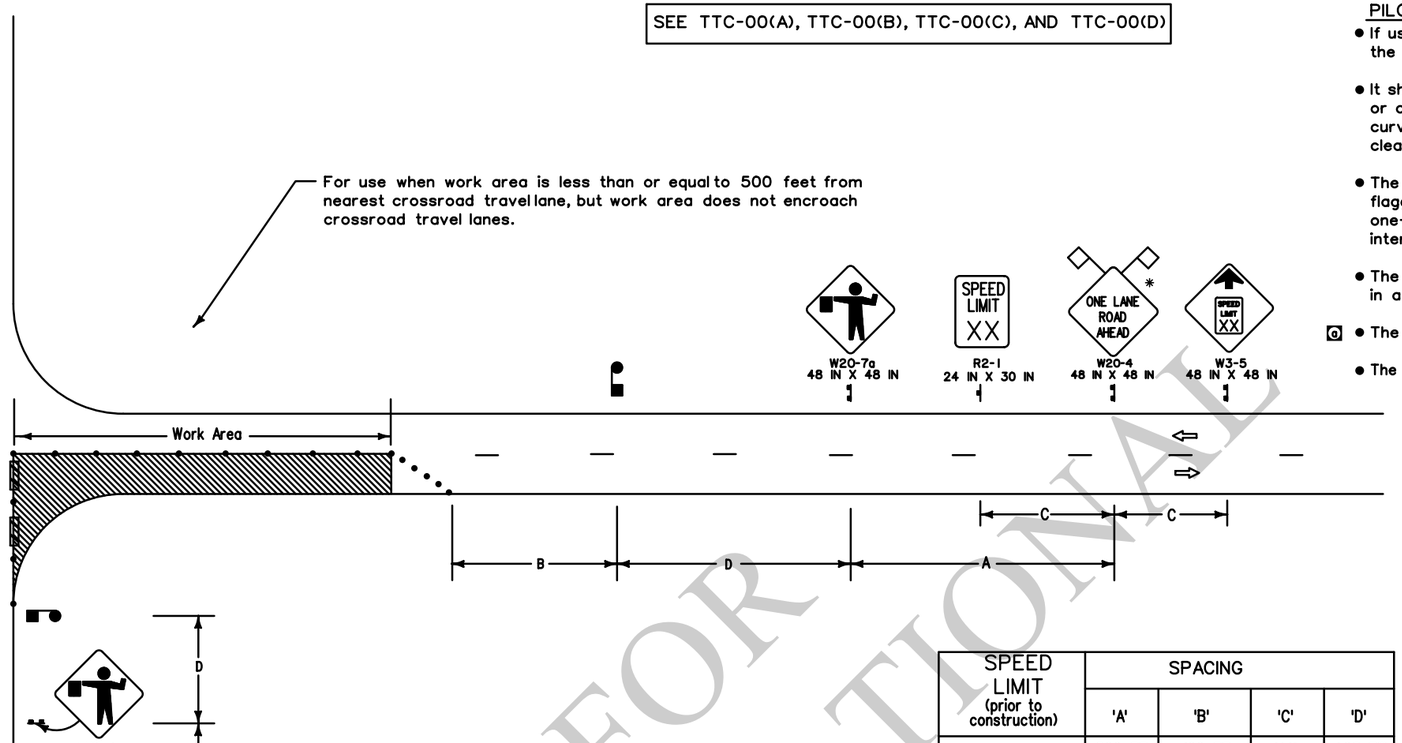

SPEED LIMIT (prior to construction)	SPACING			
	'A'	'B'	'C'	'D'
≤ 40 mph	500 FT	100 FT	N/A	125 FT
45-50 mph	1000 FT	350 FT	500 FT	350 FT
> 50 mph	1500 FT	500 FT	800 FT	500 FT

PILOT CAR

- If used, a pilot car shall guide a queue of vehicles through the work zone or diversion.
- It shall be used in restricted visibility operations such as lime or cement stabilization, chip seals, or operations in hilly or curvy terrains, where flaggers cannot see each other (no clear line-of-sight).
- The operation of the pilot vehicle shall be coordinated with flagging operations or other controls at each end of the one-lane section and all major driveways and street intersections.
- The pilot car sign should be mounted 7 feet above roadway in a position visible to oncoming and following traffic.
- Q The pilot car shall have a green/amber beacon light.
- The sign mounted on the vehicle shall be two-sided.

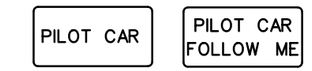

LEGEND

- Traffic Sign
- Channelizing Devices
- Type III Barricades
- Work Area
- Flagger
- Type B Light
- Direction of Travel
- Q Truck with Green/Amber Light and TMA

NOTES

This sheet shall be used with the Temporary Traffic Control General Notes Sheets TTC-00(A), TTC-00(B), TTC-00(C), and TTC-00(D).

1. This layout represents the minimum traffic controls required for lane closures on two-lane roads with two-way traffic less than 1600 feet from an intersection. For advance signing see TTC-00(D).
2. Visual or radio contact shall be required between flaggers at all times. The flagger shall be visible from flagger sign.
3. Only law officers shall direct traffic against a traffic signal indication.
4. If work area is greater than 1600 feet see TTC-04.
5. If a pilot car is required then the contractor is not required to have channelizing devices in the tangent section.
6. Q A vehicle with a flashing green/amber light and a truck mounted attenuator shall be used on all roadways with an ADT greater than 20,000 and a pre-construction speed greater than or equal to 40 mph. This vehicle shall move with work operations not to exceed the roll-ahead distance required by the manufacturer plus 100 feet.

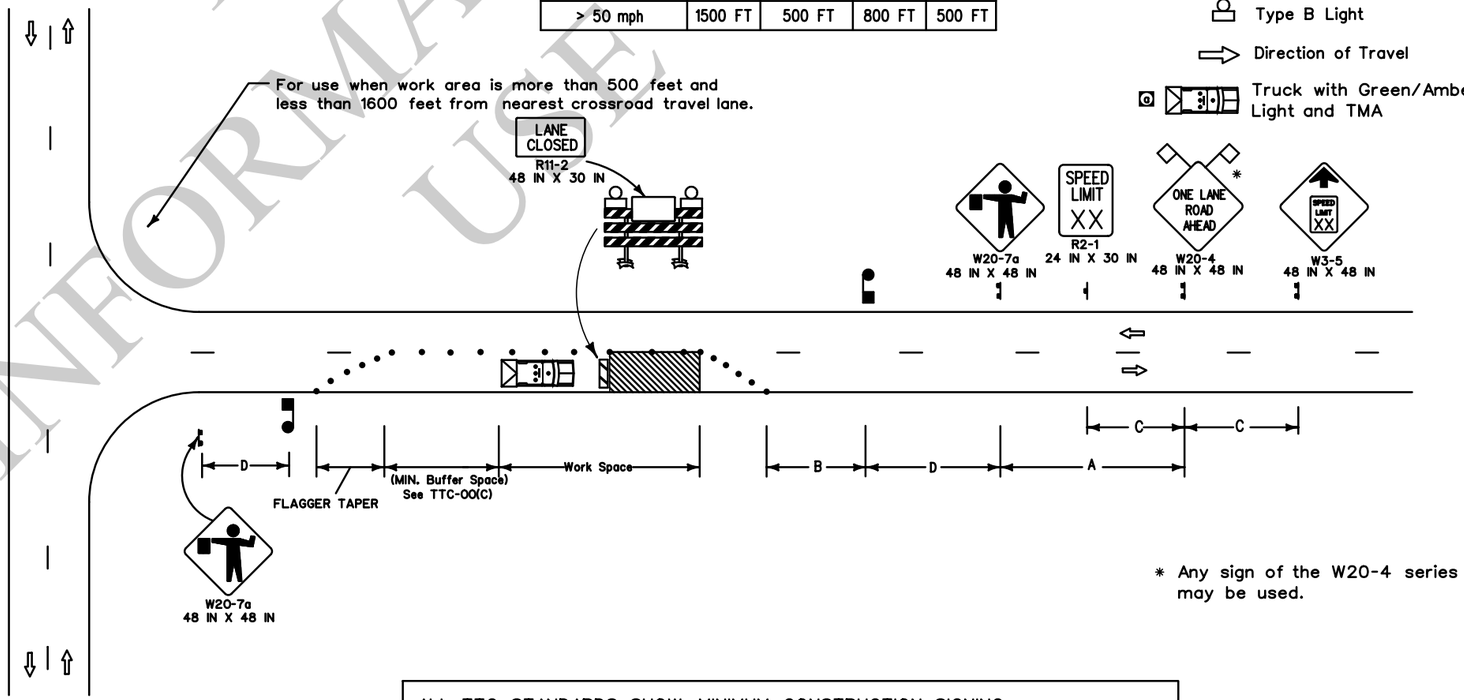

* Any sign of the W20-4 series may be used.

ALL TTC STANDARDS SHOW MINIMUM CONSTRUCTION SIGNING.
ALL SITUATIONS SHALL BE REVIEWED AND/OR DESIGNED BY THE ENGINEER.
CONTRACTORS ARE RESPONSIBLE FOR COMPLYING WITH ALL TTC STANDARDS.

FOR INFORMATIONAL USE

SHEET NUMBER

PARISH | CONTROL SECTION | STATE PROJECT

DESIGN B. BOUCHER | CHECK M. RILOVICH | DETAIL | CHECK | REVIEW | SERIES *

APPROVED BY CHIEF ENGINEER: DATE: Feb. 7, 2025

NO.	DATE	REVISION OR CHANGE ORDER DESCRIPTION	BY
	4-3-24	MINOR CORRECTIONS	BRB

STATE OF LOUISIANA

TEMPORARY TRAFFIC CONTROL

LAYOUT FOR LANE CLOSURES ON TWO LANE ROADS WITH TWO-WAY TRAFFIC NEAR INTERSECTIONS (FLAGGING OPERATIONS)

TTC-03

DOTD LOUISIANA DEPARTMENT OF TRANSPORTATION & DEVELOPMENT

TRAFFIC ENGINEERING

SEE TTC-00(A), TTC-00(B), TTC-00(C), AND TTC-00(D)

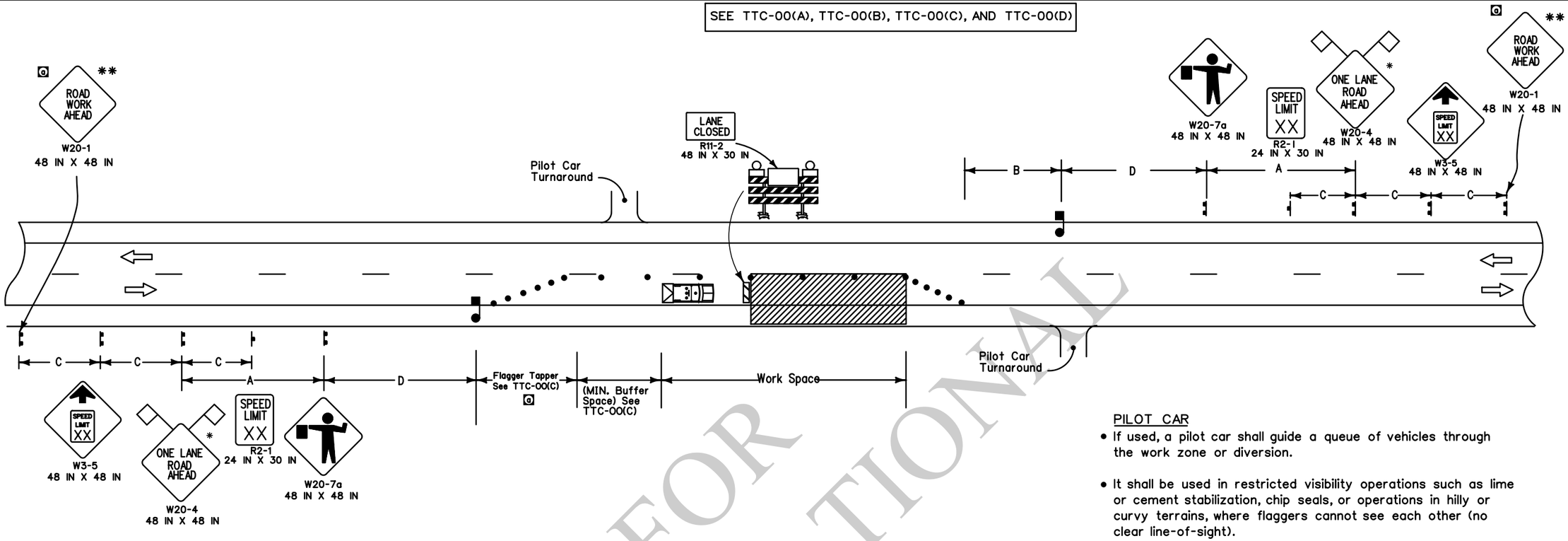

NOTES

This sheet shall be used with the Temporary Traffic Control General Notes Sheets TTC-00(A), TTC-00(B), TTC-00(C) and TTC-00(D).

1. This layout represents the minimum traffic controls required for lane closures on two-lane roads with two-way traffic greater than 1600 feet from an intersection. For this type of closure either a flagger or a pilot car will be required. For advance signing see TTC-00(D).

2. To prevent vehicles from entering the work area against the flow of traffic, an additional flagger shall be stationed at each intersection, major driveway, railroad crossing, or crossing within the work area.

3. For projects in rural areas the distance between flaggers shall not exceed:
   (A) 2.5 miles for ADT<2,500
   (B) 2.0 miles for 2,500<ADT<5,000
   (C) 1.5 miles for ADT>5,000

4. The flagger station shall be near the beginning of the taper and shall have adequate sight distance to be visible to oncoming traffic. If sight distance cannot be achieved, the distance between flaggers may be extended for a short duration.

5. Visual or radio contact shall be required between flaggers at all times. The flagger shall be visible from the flagger sign.

Q 6. A vehicle with a flashing green/amber light and a truck mounted attenuator shall be used on all roadways with an ADT greater than 20,000 and a pre-construction speed greater than or equal to 40 mph. This vehicle shall move with work operations not to exceed the roll-ahead distance required by the manufacturer plus 100 feet.

7. If a pilot car is required then the contractor is not required to have channelizing devices in the tangent section.

8. If work zone is less than 1600 feet from an intersection see TTC-03.

SPEED LIMIT (prior to construction)	SPACING			
	'A'	'B'	'C'	'D'
≤ 40 mph	500 FT	100 FT	N/A	125 FT
45-50 mph	1000 FT	350 FT	500 FT	350 FT
≥ 55 mph	1500 FT	500 FT	800 FT	500 FT

* Any sign of the W20-4 series may be used.

Q ** For extended length projects, if the distance between the current working area and beginning of the project exceeds 2500', an additional W20-1 should be added before the W3-5 sign to remind traffic of the work area.

ALL TTC STANDARDS SHOW MINIMUM CONSTRUCTION SIGNING.
ALL SITUATIONS SHALL BE REVIEWED AND/OR DESIGNED BY THE ENGINEER.
CONTRACTORS ARE RESPONSIBLE FOR COMPLYING WITH ALL TTC STANDARDS.

PILOT CAR

- If used, a pilot car shall guide a queue of vehicles through the work zone or diversion.
- It shall be used in restricted visibility operations such as lime or cement stabilization, chip seals, or operations in hilly or curvy terrains, where flaggers cannot see each other (no clear line-of-sight).
- The operation of the pilot vehicle shall be coordinated with flagging operations or other controls at each end of the one-lane section and all major driveways and street intersections.
- The pilot car sign should be mounted 7 feet above roadway in a position visible to oncoming and following traffic.
- Q The pilot car shall have an green/amber beacon light.
- The sign mounted on the vehicle shall be two-sided.

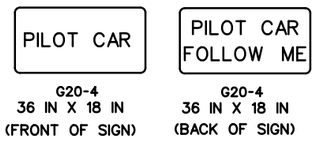

LEGEND

- Traffic Sign
- Flagger
- Channelizing Devices
- Type III Barricades
- Work Area
- Type B Light
- Direction of Travel
- Q Truck with Green/Amber Light and TMA

FOR INFORMATIONAL USE

SHEET NUMBER

PARISH | CONTROL SECTION | STATE PROJECT

DESIGN B. BOUCHER | DETAIL | REVIEW | SERIES *
CHECK M. RILOVICH | CHECK |

APPROVED BY CHIEF ENGINEER: DATE: Feb. 7, 2025

NO.	DATE	REVISION OR CHANGE ORDER DESCRIPTION	BY
Q	4-3-24	ADD W20-1 SIGN, PROJECT LENGTH, MINOR CORRECTIONS	BRB

TEMPORARY TRAFFIC CONTROL
LAYOUT FOR LANE CLOSURES ON TWO LANE ROADS WITH TWO-WAY TRAFFIC (FLAGGING OPERATIONS)

TTC-04

DOTD LOUISIANA DEPARTMENT OF TRANSPORTATION & DEVELOPMENT
TRAFFIC ENGINEERING

SPEED LIMIT (prior to construction)	SPACING				
	'A'	'B'	'C'	'D'	'E'
≤ 40 mph	60 FT	60 FT	80 FT	100 FT	N/A
45-50 mph	425 FT	150 FT	425 FT	500 FT	100 FT
≥ 55 mph	1950 FT	200 FT	1950 FT	1000 FT	150 FT

For tangent distances along the diversion greater than 600 FT

SEE TTC-00(A), TTC-00(B), TTC-00(C), AND TTC-00(D)

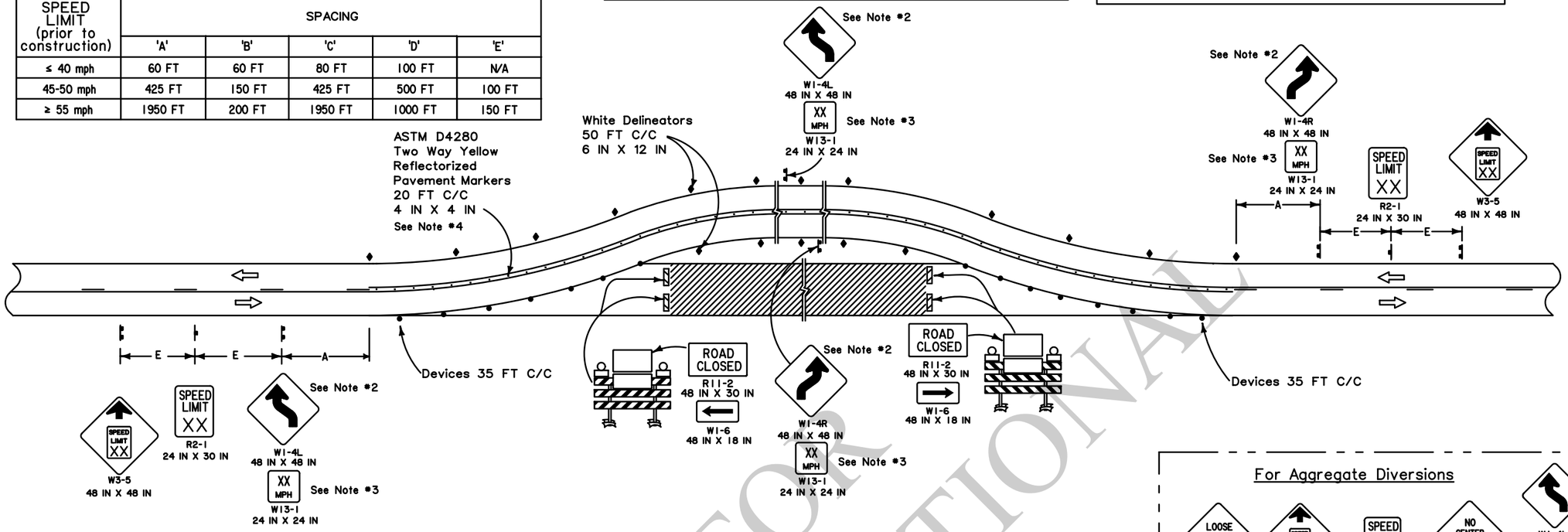

NOTES

This sheet shall be used with the Temporary Traffic Control General Notes Sheets TTC-00(A), TTC-00(B), TTC-00(C), and TTC-00(D).

1. This layout represents the minimum traffic controls required for a paved or aggregate diversion. For advance signing see TTC-00(D).
2. If advisory speed is less than 35 mph, the reverse curve signs (W1-4L or W1-4R) will be changed to reverse turn sign (W1-3L or W1-3R).
3. Advisory speed plaques (W13-1) shall be required if the difference between the speed limit prior to construction and the advisory speed (determined by an engineering study performed by the DTOE) is 10 mph or greater.
4. Paved Diversions shall be striped with double yellow solid lines and raised pavement markings as per LADOTD Pavement Marking Standards.
5. Aggregate Diversions shall include "Do Not Pass" (R4-1) signs, "Loose Gravel" (W8-7) signs, and "No Center Stripe" (W8-12) signs and either supercones or flex posts to delineate the centerline.

For Aggregate Diversions

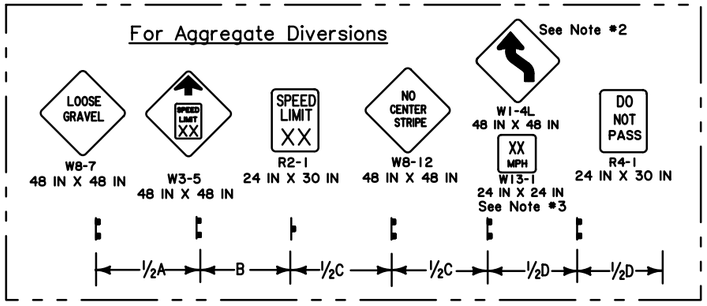

For tangent distances along the diversion less than or equal to 600 FT

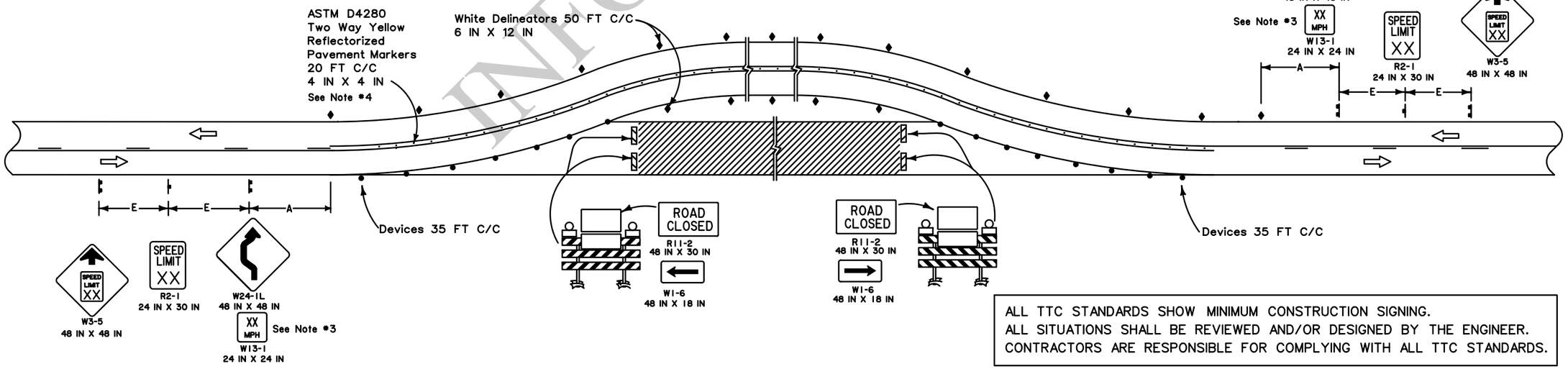

ALL TTC STANDARDS SHOW MINIMUM CONSTRUCTION SIGNING.
ALL SITUATIONS SHALL BE REVIEWED AND/OR DESIGNED BY THE ENGINEER.
CONTRACTORS ARE RESPONSIBLE FOR COMPLYING WITH ALL TTC STANDARDS.

LEGEND

- Traffic Sign
- Channelizing Devices
- Type III Barricades
- Single White Delineators (6IN X 12 IN)
- Reflectorized Pavement Markers
- Type B Light
- Direction of Travel

FOR INFORMATIONAL USE

SHEET NUMBER | PARISH | CONTROL SECTION | STATE PROJECT

DESIGN B. BOUCHER | CHECK M. RILOVICH | DETAIL | CHECK | REVIEW | SERIES #

APPROVED BY CHIEF ENGINEER: DATE: Feb. 7, 2025

NO. | DATE | BY | REVISION OR CHANGE ORDER DESCRIPTION

TEMPORARY TRAFFIC CONTROL
FOR ON SITE DIVERSION
WITH TWO-WAY TRAFFIC

TTC-05

DOTD LOUISIANA DEPARTMENT OF TRANSPORTATION & DEVELOPMENT
TRAFFIC ENGINEERING

SEE TTC-00(A), TTC-00(B), TTC-00(C), AND TTC-00(D)

RIGHT LANE CLOSURE

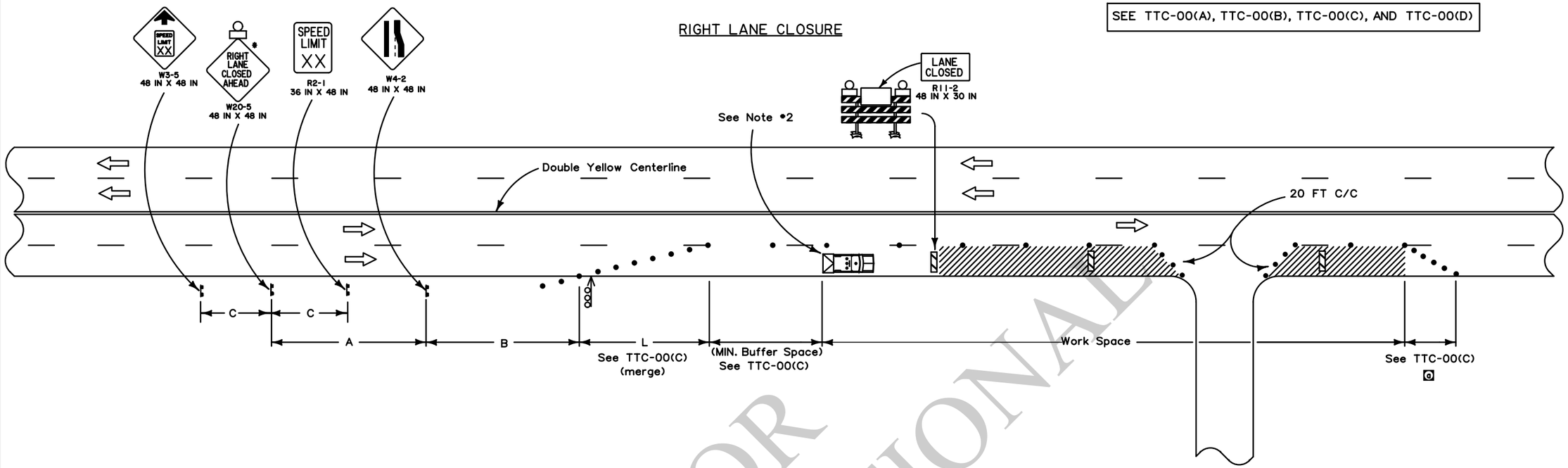

LEFT LANE CLOSURE

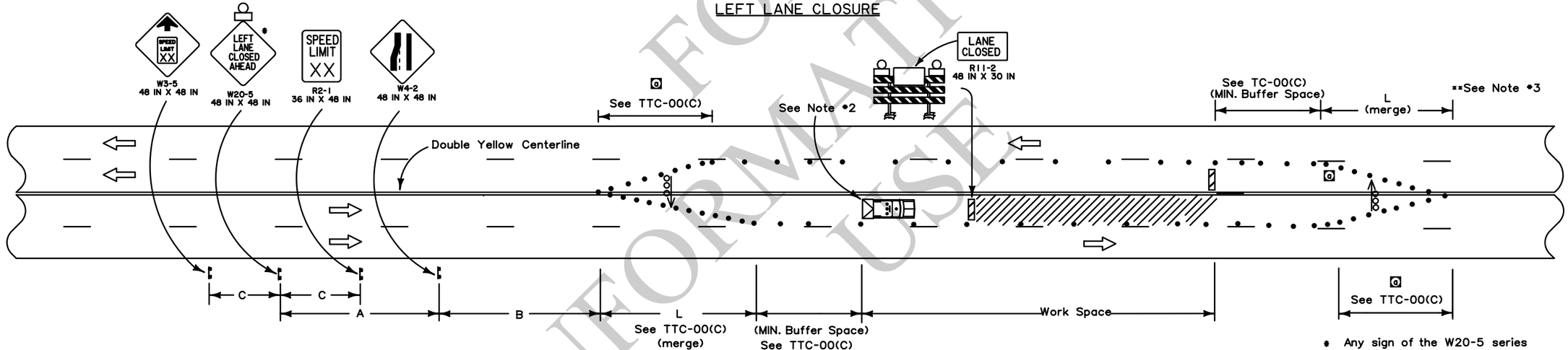

* Any sign of the W20-5 series may be used.

LEGEND

- Traffic Sign
- Channelizing Devices
- Type III Barricades
- Flashing Arrow Board (Type 'C')
- Work Area
- Type B Light
- Direction of Travel
- Truck with Green/Amber Light and TMA

NOTES

This sheet shall be used with the Temporary Traffic Control General Notes Sheets TTC-00(A), TTC-00(B), TTC-00(C), and TTC-00(D).

1. This layout represents the minimum traffic controls required for lane closures on a four-lane undivided highway or a roadway with two-way left turn lanes. This is not for roadways with a speed limit of 55 mph or greater prior to construction. For advance signing see TTC-00(D).
2. A vehicle with a flashing green/amber light and a truck mounted attenuator shall be used on all roadways with an ADT greater than 20,000 and a pre-construction speed greater than or equal to 40 mph. This vehicle shall move with work operations not to exceed the rollahead distance required by the manufacturer plus 100 feet.
3. Advance signing shall match that shown for opposite direction.
4. A flagger shall be used to alert motorists when equipment or workers encroach within 2 feet of an open lane. The flagger shall be posted inside the work zone, adjacent to the open travel lane, and immediately upstream of each operation to facilitate ingress/egress of construction equipment and vehicles. Encroachment shall be held to a minimum.

SPEED LIMIT (prior to construction)	SPACING		
	'A'	'B'	'C'
≤ 40 mph	500 FT	250 FT	N/A
45-50 mph	1000 FT	360 FT	500 FT

ALL TTC STANDARDS SHOW MINIMUM CONSTRUCTION SIGNING.
ALL SITUATIONS SHALL BE REVIEWED AND/OR DESIGNED BY THE ENGINEER.
CONTRACTORS ARE RESPONSIBLE FOR COMPLYING WITH ALL TTC STANDARDS.

FOR INFORMATIONAL USE

SHEET NUMBER

PARISH	CONTROL SECTION	STATE PROJECT

DESIGN B. BOUCHER | DETAIL | REVIEW | SERIES •
CHECK M. RILOVICH | CHECK

APPROVED BY CHIEF ENGINEER: DATE: Feb. 7, 2025

NO.	DATE	REVISION OR CHANGE ORDER DESCRIPTION	BY
1	4-3-24	CLARIFY TAPER LENGTHS AND MINOR CORRECTIONS	BRB

STATE OF LOUISIANA DEPARTMENT OF TRANSPORTATION AND DEVELOPMENT

TEMPORARY TRAFFIC CONTROL FOR LANE CLOSURE ON FOUR-LANE UNDIVIDED HIGHWAYS

TTC-06

DOTD LOUISIANA DEPARTMENT OF TRANSPORTATION & DEVELOPMENT

TRAFFIC ENGINEERING

SEE TTC-00(A), TTC-00(B), TTC-00(C), AND TTC-00(D)

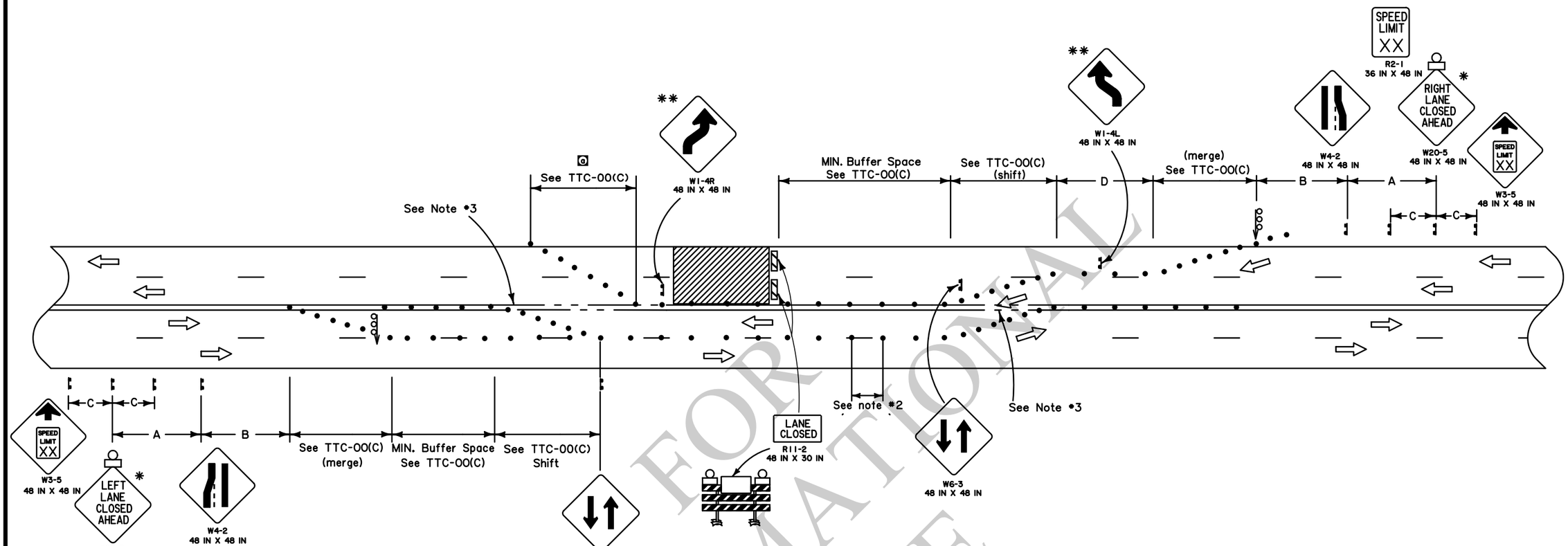

SPEED LIMIT (prior to construction)	SPACING			
	'A'	'B'	'C'	'D'
25 mph	250 FT	250 FT	N/A	65 FT
30 mph	250 FT	250 FT	N/A	90 FT
35 mph	500 FT	350 FT	N/A	125 FT
40 mph	500 FT	350 FT	N/A	160 FT
45 mph	1000 FT	500 FT	500 FT	270 FT
50 mph	1640 FT	1000 FT	800 FT	300 FT
55 mph	1640 FT	1000 FT	800 FT	330 FT

LEGEND

- Traffic Sign
- Channelizing Devices
- Type III Barricades
- Flashing Arrow Board (Type 'C')
- Work Area
- Type B Light
- Direction of Travel

* Any sign of the W20-5 series may be used.

** In order to give road users advance notice of a lane shift, a Reverse Curve (W1-4, W1-4b or W1-4c) sign should be used when a lane (or lanes) is being shifted to the left or right. If a Reverse Curve sign is used and design speed of the curves is 30 mph or less, a Reverse Turn (W1-3) sign shall be used.

NOTES

This sheet shall be used with the Temporary Traffic Control General Notes sheets TTC-00(A), TTC-00(B), TTC-00(C), and TTC-00(D).

1. This layout represents the minimum traffic controls required for closure of two adjacent lanes on a four-lane undivided highway. For advance signing see TTC-00(D).
2. During daytime operations, traffic cones may be used to seperate traffic lanes. When this layout is authorized to be used during nighttime hours or if the width of the traffic lanes are less than 11 feet, the contractor shall be required to use flex posts or super cones to separate head-to-head (two-lane two way traffic) spaced at 20 feet in tangent and 10 feet in taper.
3. When traffic control is planned to be in place for more than 3 days, conflicting pavement markings shall be removed and temporary markings added.
4. A flagger shall be used to alert motorists when equipment or workers encroach within 2 feet of an open lane. The flagger shall be posted inside the work zone, adjacent to the open travel lane, and immediately upstream of each operation to facilitate ingress/egress of construction equipment and vehicles. Encroachment shall be held to a minimum.

ALL TTC STANDARDS SHOW MINIMUM CONSTRUCTION SIGNING.
ALL SITUATIONS SHALL BE REVIEWED AND/OR DESIGNED BY THE ENGINEER.
CONTRACTORS ARE RESPONSIBLE FOR COMPLYING WITH ALL TTC STANDARDS.

FOR INFORMATIONAL USE

SHEET NUMBER

PARISH | CONTROL SECTION | STATE PROJECT

DESIGN B. BOUCHER | CHECK M. RILOVICH | DETAIL | CHECK | REVIEW | SERIES #

APPROVED BY CHIEF ENGINEER: DATE: Feb. 7, 2025

NO.	DATE	BY
0	4-3-24	BRB

CLARIFY TAPER LENGTHS
REVISION OR CHANGE ORDER DESCRIPTION

TEMPORARY TRAFFIC CONTROL
FOR CLOSURE OF TWO ADJACENT LANES ON FOUR-LANE UNDIVIDED HIGHWAYS

TTC-07

DOTD LOUISIANA DEPARTMENT OF TRANSPORTATION & DEVELOPMENT

TRAFFIC ENGINEERING

SEE TTC-00(A), TTC-00(B), TTC-00(C), AND TTC-00(D)

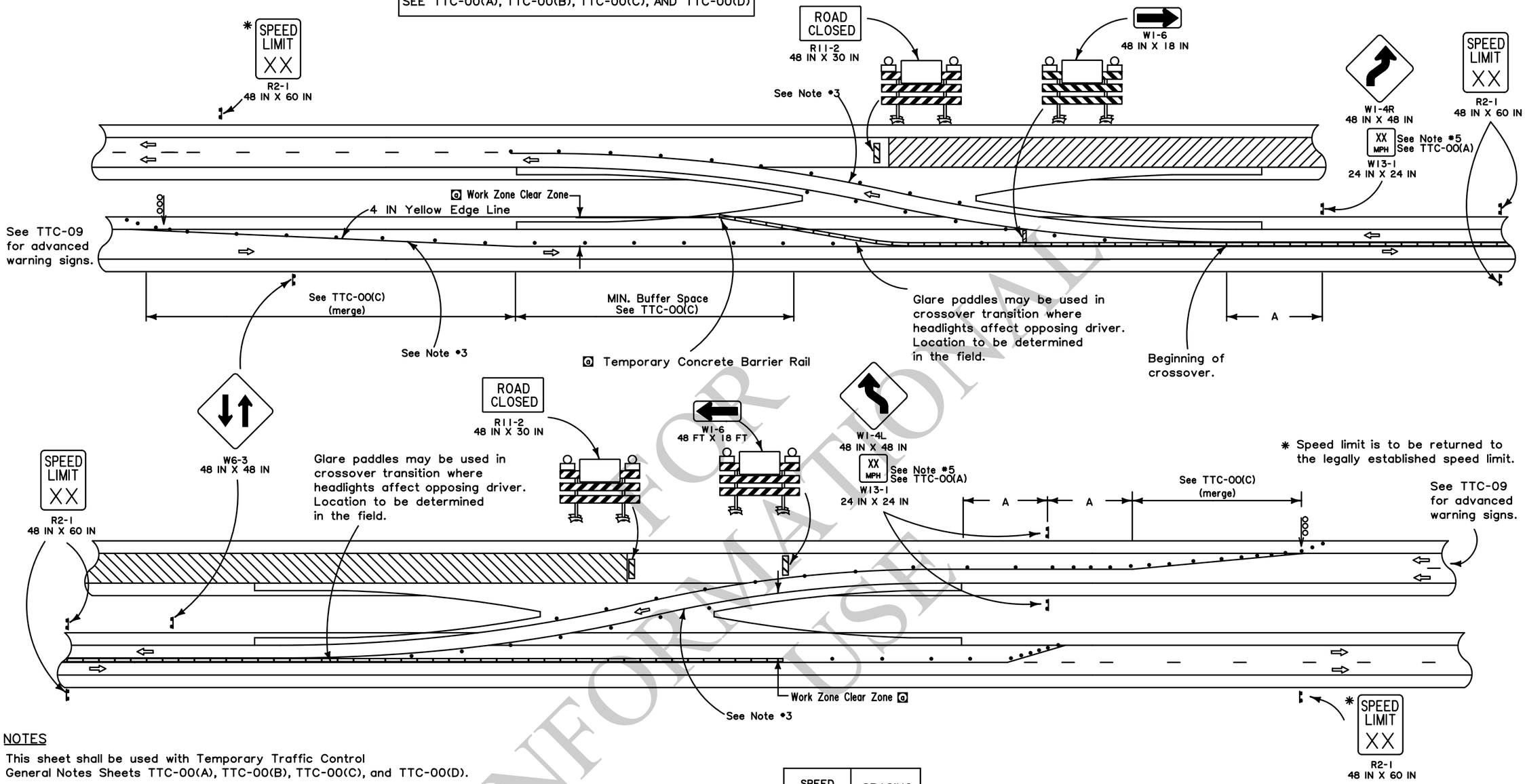

NOTES

This sheet shall be used with Temporary Traffic Control General Notes Sheets TTC-00(A), TTC-00(B), TTC-00(C), and TTC-00(D).

1. This layout represents the minimum traffic controls required for median crossovers on divided highways. For advance signing see TTC-00(D) and TTC-09.
2. For posted speed limits prior to construction that are greater than 45 mph, concrete barriers shall be required to separate the lanes of travel. For posted speed limits prior to construction that are 45 mph or less, concrete barriers may be substituted by tubular markers or flexposts.
3. Temporary raised pavement markers spaced at 15 FT C/C shall be used to supplement the white and yellow temporary edge lines through the reverse curves of the crossover. All temporary edge lines between the barrier rail and the beginning of the lane reduction taper shall have temporary raised pavement markers spaced at 15 FT C/C.
4. When traffic control is planned to be in place for more than 3 days, conflicting pavement markings shall be removed and temporary markings added.
5. Advisory speed plaques (W13-1) shall be required if the difference between the speed limit prior to construction and the advisory speed (determined by an engineering study performed by the DTOE) is 10 mph or greater.

SPEED LIMIT (prior to construction)	SPACING
	'A'
25 mph	63 FT
30 mph	90 FT
35 mph	123 FT
40 mph	160 FT
45 mph	270 FT
50 mph	300 FT
55 mph	330 FT

ALL TTC STANDARDS SHOW MINIMUM CONSTRUCTION SIGNING.
ALL SITUATIONS SHALL BE REVIEWED AND/OR DESIGNED BY THE ENGINEER.
CONTRACTORS ARE RESPONSIBLE FOR COMPLYING WITH ALL TTC STANDARDS.

LEGEND

- Traffic Sign
- Channelizing Devices
- Type III Barricades
- Flashing Arrow Board (Type 'C')
- Work Area
- Temporary Concrete Barrier
- Type B Light
- Direction of Travel

FOR INFORMATIONAL USE

SHEET NUMBER

PARISH | CONTROL SECTION | STATE PROJECT

DESIGN B. BOUCHER | CHECK M. RILOVICH | DETAIL | CHECK | REVIEW | SERIES *

APPROVED BY CHIEF ENGINEER: DATE: Feb. 7, 2025

NO.	DATE	BY
1	4-3-24	BRB

CLARIFY WORK ZONE CLEAR ZONE AND MINOR CORRECTIONS

REVISION OR CHANGE ORDER DESCRIPTION

STATE OF LOUISIANA DEPARTMENT OF TRANSPORTATION AND DEVELOPMENT

TEMPORARY TRAFFIC CONTROL FOR MEDIAN CROSSOVER ON DIVIDED HIGHWAYS

TTC-08

DOTD LOUISIANA DEPARTMENT OF TRANSPORTATION & DEVELOPMENT

TRAFFIC ENGINEERING

RIGHT LANE CLOSURE

SEE TTC-00(A), TTC-00(B), TTC-00(C), AND TTC-00(D)

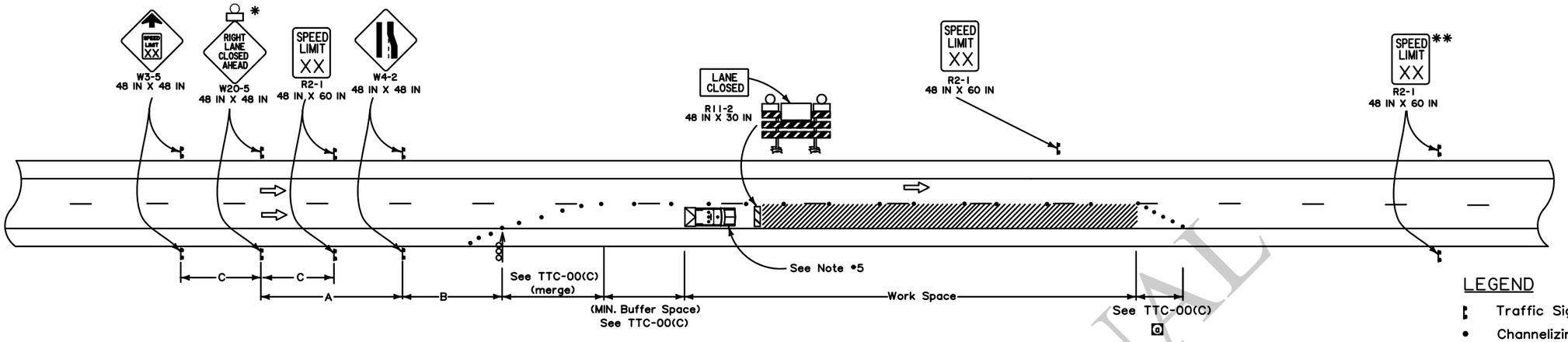

SPEED LIMIT (prior to construction)	SPACING		
	'A'	'B'	'C'
45 mph	1000 FT	500 FT	500 FT
50 mph	1000 FT	500 FT	500 FT
≥ 55 mph	1640 FT	1000 FT	800 FT

* Any sign of the W20-5 series may be used.

** Speed limit is to be returned to legally established speed limit.

LEGEND

- Traffic Sign
- Channelizing Devices
- Type III Barricades
- Flashing Arrow Board (Type 'C')
- Work Area
- Type B Light
- Direction of Travel
- Truck with Green/Amber Light and TMA

LEFT LANE CLOSURE

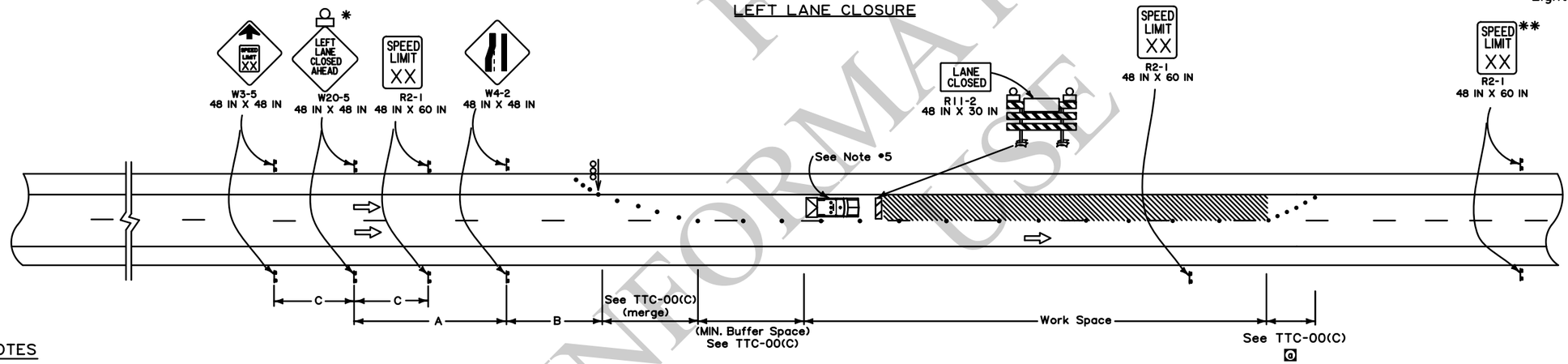

NOTES

This sheet shall be used with the Temporary Traffic Control General Notes Sheets TTC-00(A), TTC-00(B), TTC-00(C), and TTC-00(D).

1. This layout represents the minimum traffic controls required for lane closures on divided highways with speed limits greater than 40 mph. This layout does not cover roadwork where a ramp entrance or an exit taper falls within the work area. For advance signing see TTC-00(D).

2. This layout does not illustrate roadwork near a signal or a major intersection.

3. Sign spacing may be adjusted due to access conditions of the corridor.

4. If speed limit is less than 45 mph, see TTC-10.

5. A vehicle with a flashing green/amber light and a truck mounted attenuator shall be used on all interstate projects or on all roadways with an ADT greater than 20,000 and a pre-construction speed greater than or equal to 40 mph. This vehicle shall move with work operations not to exceed the roll-ahead distance required by the manufacturer plus 100 feet.

6. A flagger shall be used to alert motorists when equipment or workers encroach within 2 feet of an open lane. The flagger shall be posted inside the work zone, adjacent to the open travel lane, and immediately upstream of each operation to facilitate ingress/egress of construction equipment and vehicles. Encroachment shall be held to a minimum.

7. A "Road Work Ahead" sign shall be placed within 1000 feet ahead of the entrance ramp nose for any ramp within the area of traffic control signing.

ALL TTC STANDARDS SHOW MINIMUM CONSTRUCTION SIGNING.
ALL SITUATIONS SHALL BE REVIEWED AND/OR DESIGNED BY THE ENGINEER.
CONTRACTORS ARE RESPONSIBLE FOR COMPLYING WITH ALL TTC STANDARDS.

FOR INFORMATIONAL USE

SHEET NUMBER

PARISH | CONTROL SECTION | STATE PROJECT

DESIGN B. BOUCHER | CHECK M. RILOVICH | DETAIL | CHECK | REVIEW | SERIES •

APPROVED BY CHIEF ENGINEER: DATE: Feb 7, 2025

NO.	DATE	REVISION OR CHANGE ORDER DESCRIPTION	BY
	4-3-24	CLARIFY TAPER LENGTHS AND MINOR CORRECTIONS	BRB

TEMPORARY TRAFFIC CONTROL
FOR LANE CLOSURES ON
DIVIDED HIGHWAYS
(Does not include ramp entrance or exit tapers)

TTC-09

DOTD
LOUISIANA DEPARTMENT OF TRANSPORTATION & DEVELOPMENT
TRAFFIC ENGINEERING

SEE TTC-00(A), TTC-00(B) AND TTC-00(C)

NORMAL LANE CLOSURE

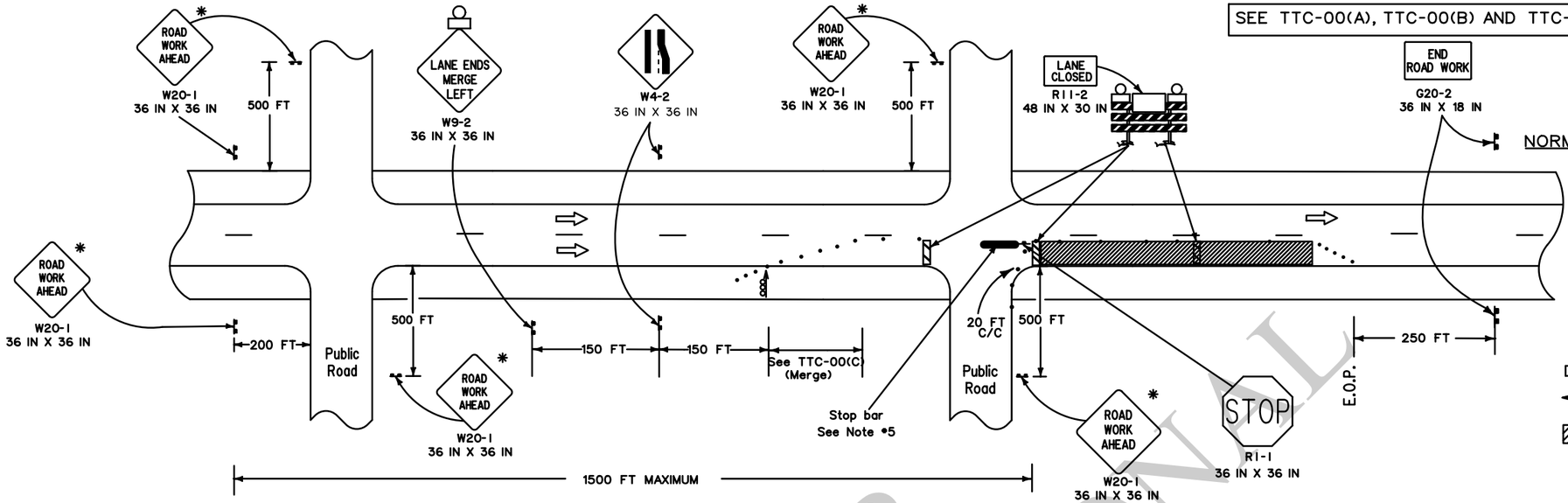

LEGEND

- Traffic Sign
- Channelizing Devices
- Type III Barricades
- Flashing Arrow Board (Type 'C')
- Work Area
- Type B Light
- Direction of Travel

LANE CLOSURE WITH HIGH VOLUME RIGHT TURNS AND/OR SIDEWALK CLOSURE

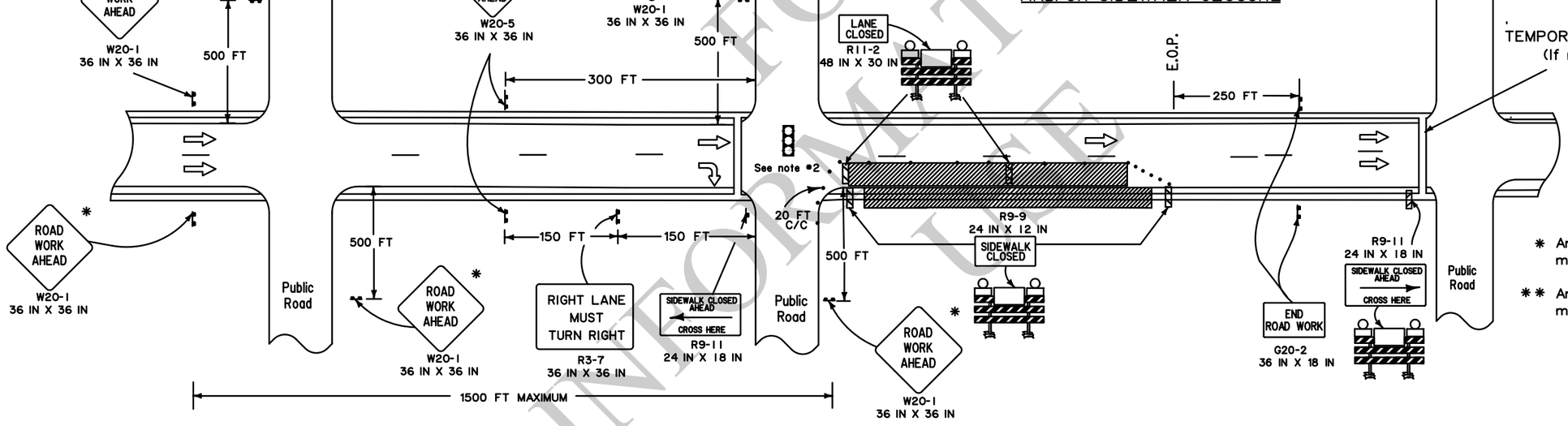

* Any sign of the W20-1 series may be used.

** Any sign of the W20-5 series may be used.

NOTES

This sheet shall be used with the Temporary Traffic Control General Notes Sheets TTC-00(A), TTC-00(B) and TTC-00(C).

1. This layout represents the minimum traffic controls required for lane closures in areas with a grid layout and with speed limits of 40 mph and below. This layout illustrates roadwork near a signal or a major intersection with or without sidewalks.
2. If a signal is involved in the construction zone, a specific temporary traffic signal timing and phasing plan for each phase of construction shall be developed.
3. Bicyclists and pedestrians, including those with disabilities, should be provided with access and reasonably safe passage through the TTC zone.
4. The sign height shall be at least 7 feet in business, commercial, and residential areas and also near parking, pedestrians, bicyclists, or other obstructions.
5. Place stop bars if work duration is greater than 3 days.
6. Place "Road Work Ahead" sign prior to an intersecting alternate route, no more than 1500 feet from the work area.
7. When crosswalks or other pedestrian facilities are closed or relocated, temporary facilities shall be detectable and shall include accessibility features consistent with the features in the existing pedestrian facility as defined in the MUTCD.

ALL TTC STANDARDS SHOW MINIMUM CONSTRUCTION SIGNING.
ALL SITUATIONS SHALL BE REVIEWED AND/OR DESIGNED BY THE ENGINEER.
CONTRACTORS ARE RESPONSIBLE FOR COMPLYING WITH ALL TTC STANDARDS.

FOR INFORMATIONAL USE

SHEET NUMBER

PARISH | CONTROL SECTION | STATE PROJECT

DESIGN B. BOUCHER | DETAIL | REVIEW | SERIES #
CHECK M. RILOVICH | CHECK

APPROVED BY CHIEF ENGINEER: DATE: Feb. 7, 2025

NO. | DATE | REVISION OR CHANGE ORDER DESCRIPTION | BY

STATE OF LOUISIANA DEPARTMENT OF TRANSPORTATION & DEVELOPMENT

TEMPORARY TRAFFIC CONTROL

FOR LANE AND SIDEWALK CLOSURES IN URBAN AREAS WITH SPEED LIMIT LESS THAN OR EQUAL TO 40 MPH

TTC-10

DOTD
LOUISIANA DEPARTMENT OF TRANSPORTATION & DEVELOPMENT
TRAFFIC ENGINEERING

NOTES

This sheet shall be used with the Temporary Traffic Control General Notes Sheets TTC-00(A), TTC-00(B), TTC-00(C), and TTC-00(D).

1. This layout represents the minimum traffic controls required for lane closures and lane shift using temporary barrier rail on divided highways. This includes freeways. For advance signing see TTC-00(D).

2. If a ramp entrance or exit taper falls within the work area, refer to standard road plan TTC-12 for traffic control details.

3. When traffic control is planned to be in place for more than 3 days, conflicting pavement markings shall be removed and temporary markings added. Existing broken line pavement marking shall be removed from the W4-2 sign through the work area.

4. For work lasting more than 3 days, a temporary edgeline shall be installed from the start of the merging taper to the far end of the downstream taper.

5. If the lane shift occurs on new pavement or existing shoulder, then W1-4R or W1-4L is required.

6. If a shoulder which is not at full pavement depth is used as a temporary travel lane, advanced signs should direct trucks to use the existing roadway, not the shoulder.

7. When traffic is diverted onto shoulder, additional shoulder work and/or soil stabilizers may be required. Shoulder and embankment stability should be evaluated beforehand.

8. Extra paved surface may be needed to maintain crashworthiness of concrete barriers. These drawings only intend to show a few scenarios/options for handling concrete barriers/attenuators that could be used. [o]

SPEED LIMIT (prior to construction)	SPACING			
	'A'	'B'	'C'	'D'
45 mph	1000 FT	500 FT	500 FT	300 FT
50 mph	1000 FT	500 FT	500 FT	300 FT
≥ 55 mph	1640 FT	1000 FT	800 FT	450 FT

LEGEND

- Traffic Sign
- Channelizing Devices
- Flashing Arrow Board (Type 'C')
- Work Area
- Type B Light
- Concrete Barrier
- Direction of Travel
- [o] Attenuator

SEE TTC-00(A), TTC-00(B), TTC-00(C), AND TTC-00(D)

LANE SHIFT TOWARD SHOULDER

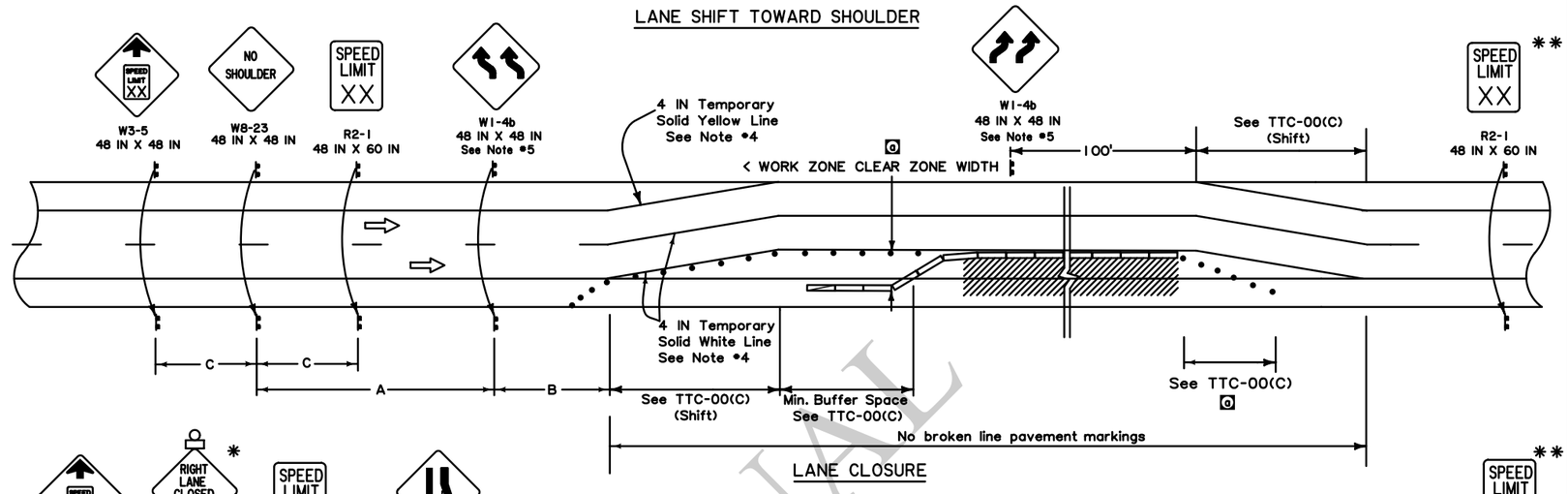

LANE CLOSURE

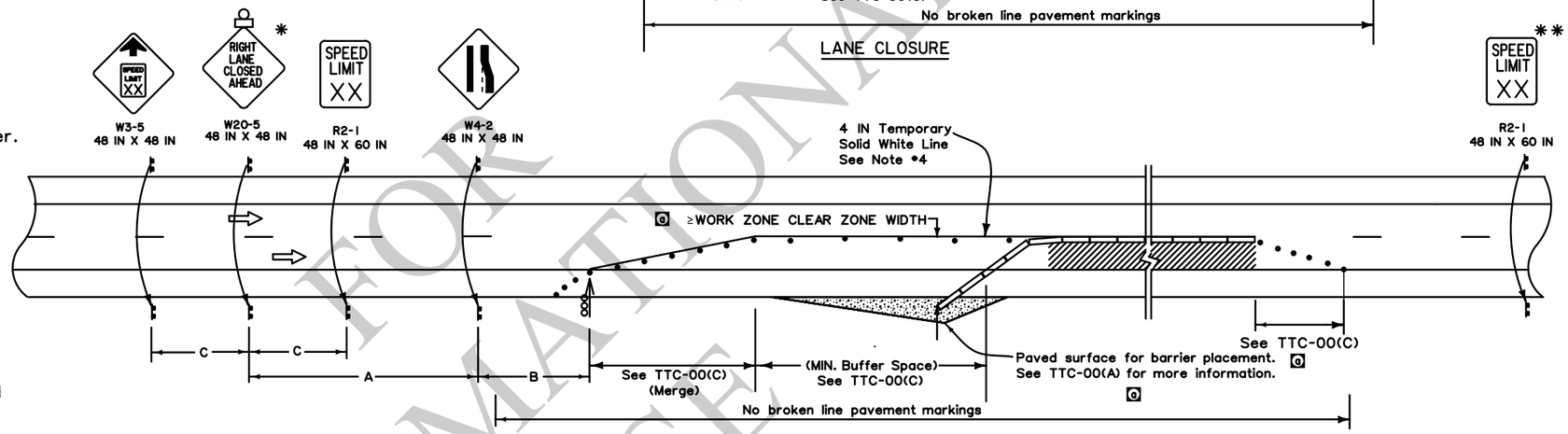

LANE CLOSURE AND SHIFT TOWARD SHOULDER

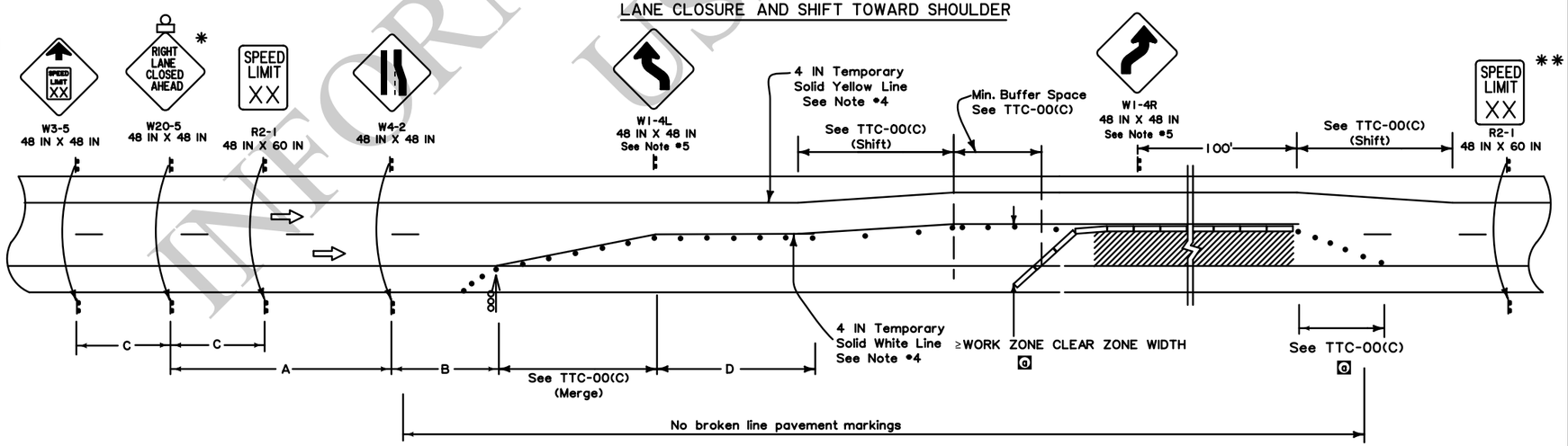

ALL TTC STANDARDS SHOW MINIMUM CONSTRUCTION SIGNING.
ALL SITUATIONS SHALL BE REVIEWED AND/OR DESIGNED BY THE ENGINEER.
CONTRACTORS ARE RESPONSIBLE FOR COMPLYING WITH ALL TTC STANDARDS.

* Any sign of the W20-5 seriesmay be used.

** Speed limit is to be returned to legally established speed limit.

FOR INFORMATIONAL USE

SHEET NUMBER

PARISH | CONTROL SECTION | STATE PROJECT

DESIGN: B. BOUCHER | DETAIL | REVIEW | SERIES *
CHECK: M. RILOVICH | CHECK |

APPROVED BY CHIEF ENGINEER: DATE: Feb. 7, 2025

NO.	DATE	BY
1	4-3-24	BRB

1 CLARIFY BARRIER USE AND MINOR CORRECTIONS
REVISION OR CHANGE ORDER DESCRIPTION

TEMPORARY TRAFFIC CONTROL
FOR LANE CLOSURE USING TEMPORARY BARRIER RAIL ON DIVIDED HIGHWAYS (INCLUDES FREEWAYS)

TTC-11

DOTD
LOUISIANA DEPARTMENT OF TRANSPORTATION & DEVELOPMENT
TRAFFIC ENGINEERING

FREEWAY ENTRANCE WITH RIGHT LANE CLOSED

SEE TTC-00(A), TTC-00(B), TTC-00(C), AND TTC-00(D)

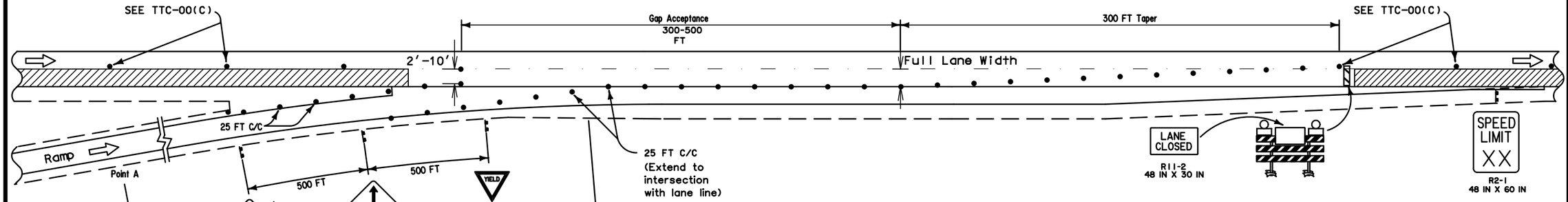

Point A controls the speed of the ramp, which is the PC or PCC of the curve. Assume that 45 mph is achieved at this point on diagonal ramps and 20 mph is achieved for loop ramps.

The Minimum Radius prior to Lg should be a minimum of 1000 feet. Anything less than 1000 feet shall be approved by the Engineer.

FREEWAY ENTRANCE WITH LEFT LANE CLOSED

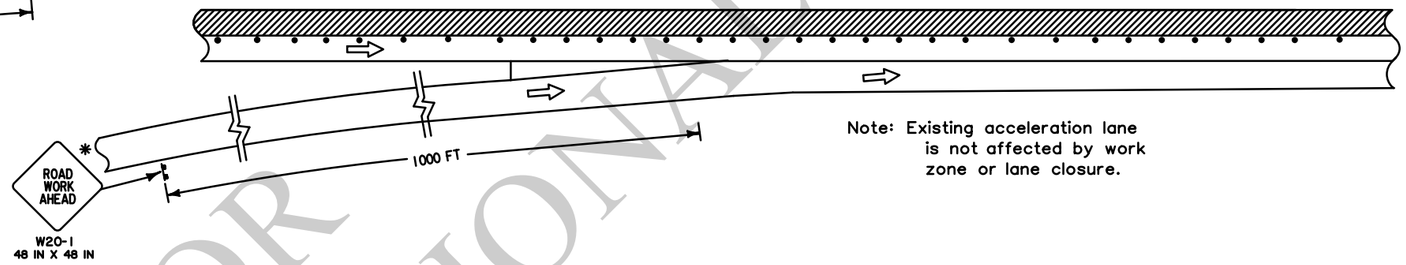

Note: Existing acceleration lane is not affected by work zone or lane closure.

FREEWAY EXIT WITH RIGHT LANE CLOSED

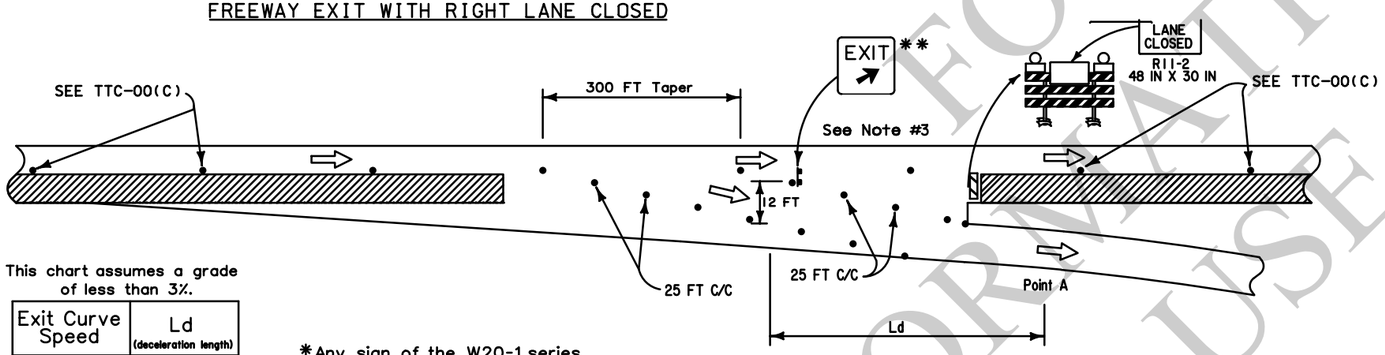

These charts assume a grade of less than 3%.

Diagonal Ramps	Speed Limit (prior to construction)	La (acceleration length)
	70 mph	820 FT
	65 mph	600 FT
	60 mph	600 FT

Loop Ramps	Speed Limit (prior to construction)	La (acceleration length)
	70 mph	1520 FT
	65 mph	1310 FT
	60 mph	1100 FT

For more information, see Chapter 10 of the AASHTO Green Book.

This chart assumes a grade of less than 3%.

Exit Curve Speed	Ld (deceleration length)
20 mph	500 FT
45 mph	300 FT

For more information, see Chapter 10 of the AASHTO Green Book.

*Any sign of the W20-1 series may be used.

**The temporary green and white "Exit" sign (E5-1) shall be 48 IN X 48 IN.

FREEWAY EXIT WITH LEFT LANE CLOSED

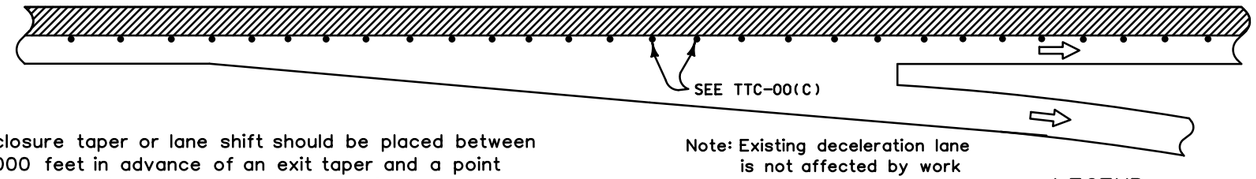

Note: Existing deceleration lane is not affected by work zone or lane closure.

NOTES

This sheet shall be used with the Temporary Traffic Control General Notes Sheets TTC-00(A), TTC-00(B), TTC-00(C), and TTC-00(D).

1. This layout represents the minimum traffic controls required for a temporary work area with lane closures through ramp entrances and exit tapers on a freeway. For advance signing see TTC-00(D).
2. For mainline lane closures see TTC-09, TTC-10 or TTC-11.
3. The mounting height of the temporary "Exit" sign (E5-1) shall be a minimum of 7 feet from the pavement surface to the bottom of the sign. The existing green and white "Exit" sign shall be covered.
4. If acceleration distance (La) and/or gap acceptance (Lg) of 300 feet cannot be achieved, the ramp shall be closed.
5. No lane closure taper or lane shift should be placed between a point 1000 feet in advance of an exit taper and a point 100 feet past the striped gore point of an exit ramp. The Engineer can reduce the 1000 feet distance requirement if field conditions justify the reduction.
6. No lane closure taper or lane shift should be placed between a point 100 feet in advance of the striped gore point of an on ramp and a point that is a distance of 2L from the end of the acceleration lane taper. See TTC-00(C) for taper lengths.

ALL TTC STANDARDS SHOW MINIMUM CONSTRUCTION SIGNING.
ALL SITUATIONS SHALL BE REVIEWED AND/OR DESIGNED BY THE ENGINEER.
CONTRACTORS ARE RESPONSIBLE FOR COMPLYING WITH ALL TTC STANDARDS.

LEGEND

- Traffic Sign
- Channelizing Devices
- Type III Barricades
- Work Area
- Type B Light
- Direction of Travel

FOR INFORMATIONAL USE

SHEET NUMBER

PARISH | CONTROL SECTION | STATE PROJECT

DESIGN B. BOUCHER | CHECK M. RILOVICH | DETAIL | CHECK | REVIEW | SERIES #

APPROVED BY CHIEF ENGINEER: DATE: Feb. 7, 2025

NO. | DATE | REVISION OR CHANGE ORDER DESCRIPTION | BY

STATE OF LOUISIANA DEPARTMENT OF TRANSPORTATION AND DEVELOPMENT

TEMPORARY TRAFFIC CONTROL
FOR LANE CLOSURES THROUGH
RAMP ENTRANCE AND EXIT TAPERS

TTC-12

DOTD
LOUISIANA DEPARTMENT OF TRANSPORTATION & DEVELOPMENT
TRAFFIC ENGINEERING

SEE TTC-00(A), TTC-00(B), TTC-00(C), AND TTC-00(D)

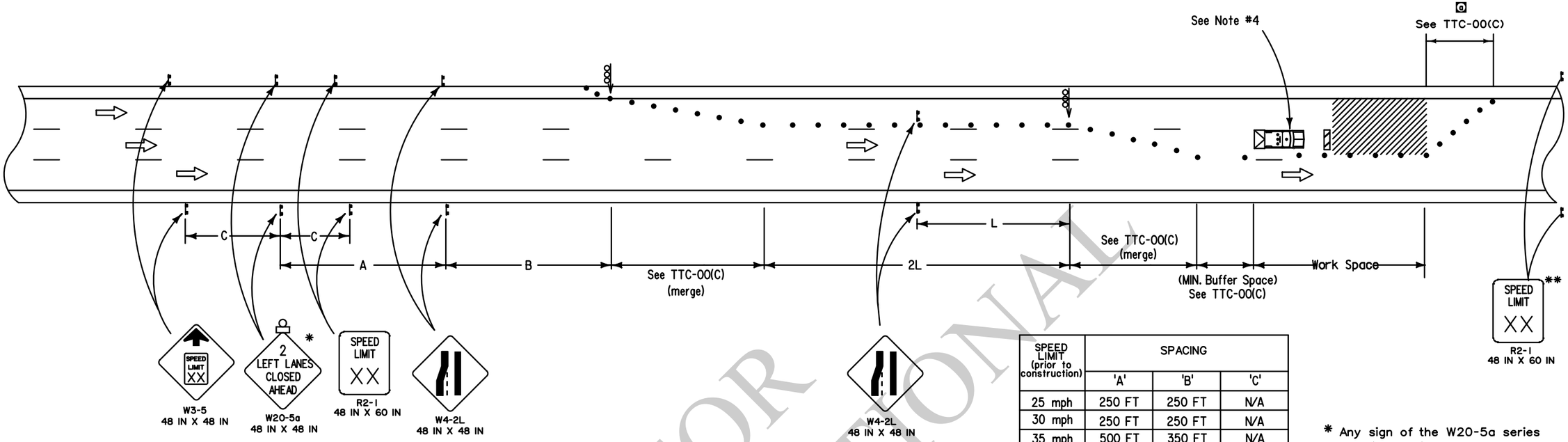

SPEED LIMIT (prior to construction)	SPACING		
	'A'	'B'	'C'
25 mph	250 FT	250 FT	N/A
30 mph	250 FT	250 FT	N/A
35 mph	500 FT	350 FT	N/A
40 mph	500 FT	350 FT	N/A
45 mph	1000 FT	500 FT	500 FT
50 mph	1000 FT	500 FT	500 FT
≥ 55 mph	1640 FT	1000 FT	800 FT

* Any sign of the W20-5a series may be used.

** Speed limit is to be returned to legally established speed limit.

LEGEND

- Traffic Sign
- Channelizing Devices
- Type III Barricades
- Flashing Arrow Board (Type 'C')
- Work Area
- Type B Light
- Truck with Green/Amber Light and TMA ◘

NOTES

This sheet shall be used with the Temporary Traffic Control General Notes Sheets TTC-00(A), TTC-00(B), TTC-00(C), and TTC-00(D).

1. This layout represents the minimum traffic controls required for two lanes closed on a divided 6 lane or more highway. This road work does not cover road work where a ramp entrance or exit taper falls within the work area. For advance signing see TTC-00(D).

2. This layout does not illustrate road work near a signal or a major intersection.

3. A "Road Work Ahead" sign shall be placed 1000 feet ahead of the entrance ramp nose for any ramp within the area of traffic control signing.

◘ 4. A vehicle with a flashing green/amber light and a truck mounted attenuator shall be used on all interstate projects or on all roadways with an ADT greater than 20,000 and a pre-construction speed greater than or equal to 40 mph. This vehicle shall move with work operations not to exceed the rollahead distance required by the manufacturer plus 100 feet.

ALL TTC STANDARDS SHOW MINIMUM CONSTRUCTION SIGNING.
ALL SITUATIONS SHALL BE REVIEWED AND/OR DESIGNED BY THE ENGINEER.
CONTRACTORS ARE RESPONSIBLE FOR COMPLYING WITH ALL TTC STANDARDS.

FOR INFORMATIONAL USE

SHEET NUMBER

PARISH | CONTROL SECTION | STATE PROJECT

DESIGN: B. BOUCHER | CHECK: M. RILOVICH | DETAIL | CHECK | REVIEW | SERIES #

APPROVED BY CHIEF ENGINEER: DATE: Feb. 7, 2025

NO.	DATE	REVISION OR CHANGE ORDER DESCRIPTION	BY
◘	4-5-24	CLARIFY TAPER LENGTH AND MINOR CORRECTIONS	BRB

STATE OF LOUISIANA

TEMPORARY TRAFFIC CONTROL FOR CLOSURE OF TWO LANES ON A MULTI-LANE HIGHWAY

TTC-13

DOTD LOUISIANA DEPARTMENT OF TRANSPORTATION & DEVELOPMENT

TRAFFIC ENGINEERING

SEE TTC-00(A), TTC-00(B), TTC-00(C), AND TTC-00(D)

* Any sign of the W20-5 series may be used.

** Speed limit is to be returned to legally established speed limit.

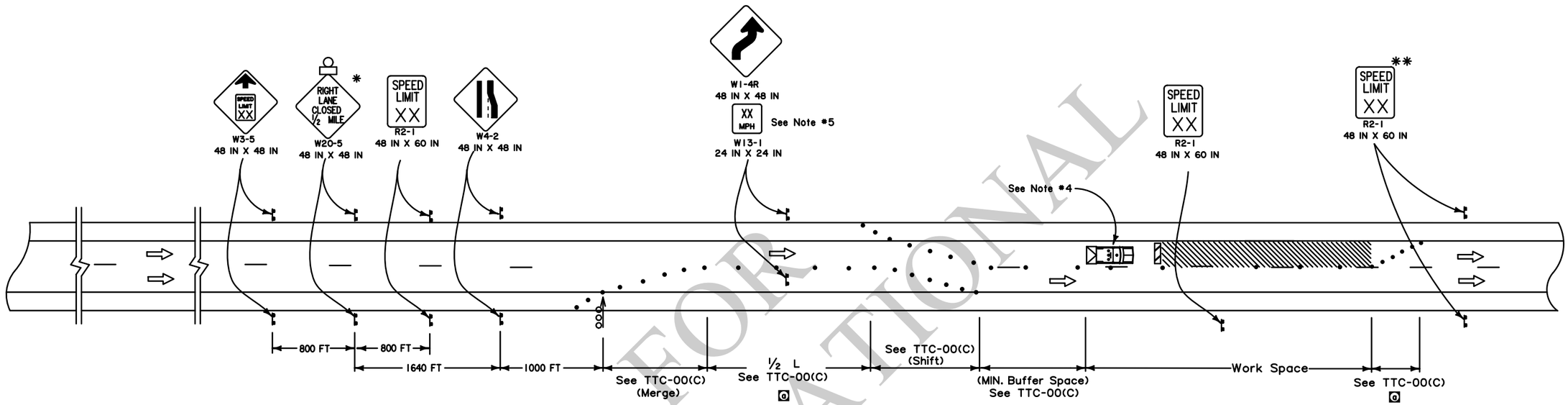

NOTES

This sheet shall be used with the Temporary Traffic Control General Notes Sheets TTC-00(A), TTC-00(B), TTC-00(C) and TTC-00(D).

1. This layout represents the minimum traffic controls required for work in the left lane that would require the left lane to be closed on rural multi-lane divided highways and all interstates where left exit and entrance ramps do not exist. For advance signing see TTC-00(D).

2. This layout does not illustrate road work where a ramp entrance or an exit taper falls within the work area.

3. This layout does not illustrate road work near a signal or a major intersection.

4. A vehicle with a flashing green/amber light and a truck mounted attenuator shall be used on all interstate projects or on all roadways with an ADT greater than 20,000 and a pre-construction speed greater than or equal to 40 mph. This vehicle shall move with work operations not to exceed the roll-ahead distance required by the manufacturer plus 100 feet.

5. Advisory speed plaques (W13-1) shall be required if the difference between the speed limit prior to construction and the advisory speed (determined by an engineering study performed by the DTOE) is 10 mph or greater.

ALL TTC STANDARDS SHOW MINIMUM CONSTRUCTION SIGNING.
ALL SITUATIONS SHALL BE REVIEWED AND/OR DESIGNED BY THE ENGINEER.
CONTRACTORS ARE RESPONSIBLE FOR COMPLYING WITH ALL TTC STANDARDS.

LEGEND

- Traffic Sign
- Channelizing Devices
- Type III Barricades
- Flashing Arrow Board (Type 'C')
- Work Area
- Type B Light
- Direction of Travel
- Truck with Green/Amber Light and TMA

INFORMATIONAL USE

SHEET NUMBER

PARISH | CONTROL SECTION | STATE PROJECT

DESIGN B. BOUCHER | CHECK M. RILOVICH | DETAIL | CHECK | REVIEW | SERIES *

APPROVED BY CHIEF ENGINEER: DATE: Feb. 7, 2025

NO.	DATE	BY	REVISION OR CHANGE ORDER DESCRIPTION
1	4-3-24	BRB	CLARIFY TAPER LENGTHS AND MINOR CORRECTIONS

STATE OF LOUISIANA DEPARTMENT OF TRANSPORTATION AND DEVELOPMENT

TEMPORARY TRAFFIC CONTROL FOR LOUISIANA LEFT ON INTERSTATE HIGHWAYS

TTC-14

DOTD LOUISIANA DEPARTMENT OF TRANSPORTATION & DEVELOPMENT

TRAFFIC ENGINEERING

✳48 hours prior to closure

SEE TTC-00(A), TTC-00(B) AND TTC-00(C)

CLOSURE WHEN NO ALTERNATE ROUTE IS AVAILABLE

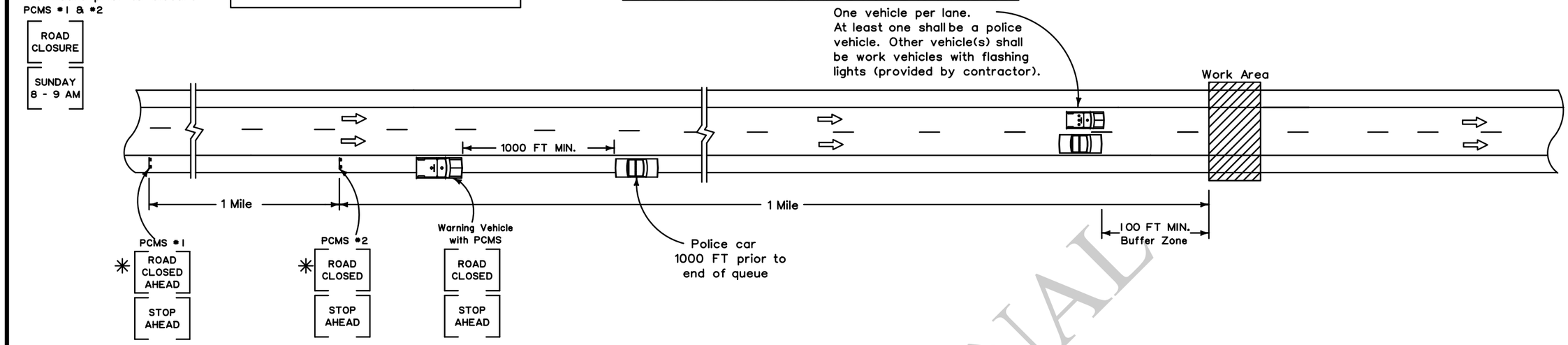

CLOSURE WHEN ALTERNATE ROUTE IS AVAILABLE FROM NEAREST EXIT

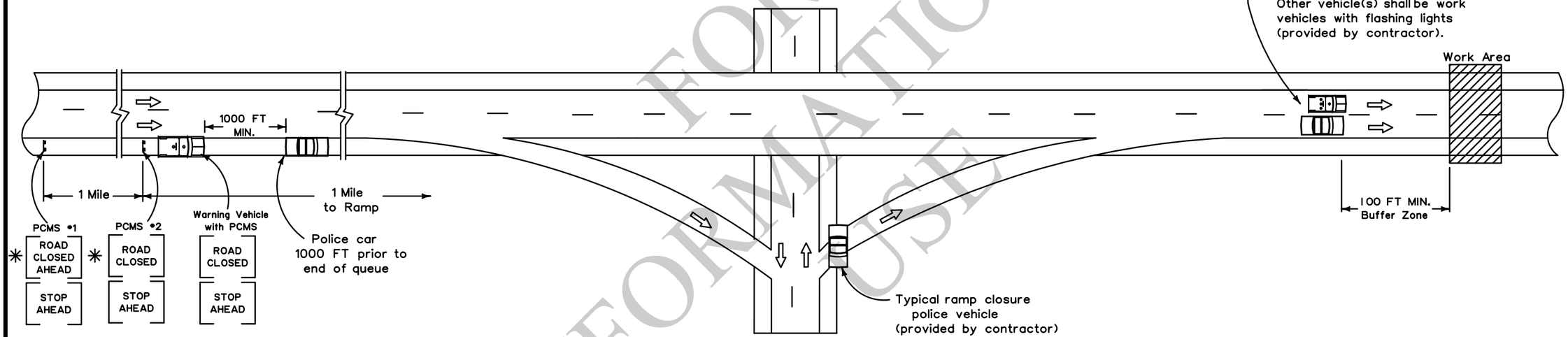

NOTES

This sheet shall be used with the Temporary Traffic Control General Notes Sheets TTC-00(A), TTC-00(B) and TTC-00(C).

1. This layout represents the minimum traffic controls required for short duration closure of divided highways.
2. This type of highway closure shall only be used for emergencies or for construction operations approved by the Engineer and when the duration of closure will not exceed 15 minutes. After the divided highway has been closed and reopened via this procedure a minimum period of 30 minutes or queue dissipation shall elapse before another short duration closure, except with the approval of the Engineer.
3. A minimum of two police officers and two police cars shall be provided on each approach to the closure. Each police car shall have a roof mounted rotation blue light or blue bar.
4. All workers involved in the closure shall maintain radio communications at all times.

ALL TTC STANDARDS SHOW MINIMUM CONSTRUCTION SIGNING.
ALL SITUATIONS SHALL BE REVIEWED AND/OR DESIGNED BY THE ENGINEER.
CONTRACTORS ARE RESPONSIBLE FOR COMPLYING WITH ALL TTC STANDARDS.

LEGEND

- Direction of Travel
- Police Car
- Work Vehicle with Green/Amber Light
- Warning Vehicle with PCMS

FOR INFORMATIONAL USE

SHEET NUMBER

PARISH | CONTROL SECTION | STATE PROJECT

DESIGN B. BOUCHER | DETAIL | REVIEW | SERIES #
CHECK M. RILOVICH | CHECK

APPROVED BY CHIEF ENGINEER: DATE: Feb. 7, 2025

NO.	DATE	REVISION OR CHANGE ORDER DESCRIPTION	BY
0	4-3-24	MINOR CORRECTIONS	BRB

STATE OF LOUISIANA

TEMPORARY TRAFFIC CONTROL
FOR SHORT DURATION CLOSING
OF DIVIDED HIGHWAYS

TTC-15

DOTD
LOUISIANA DEPARTMENT OF TRANSPORTATION & DEVELOPMENT

TRAFFIC ENGINEERING

SEE TTC-00(A), TTC-00(B) AND TTC-00(C)

ADVANCE WARNING SIGN DURING ROAD CLOSURE

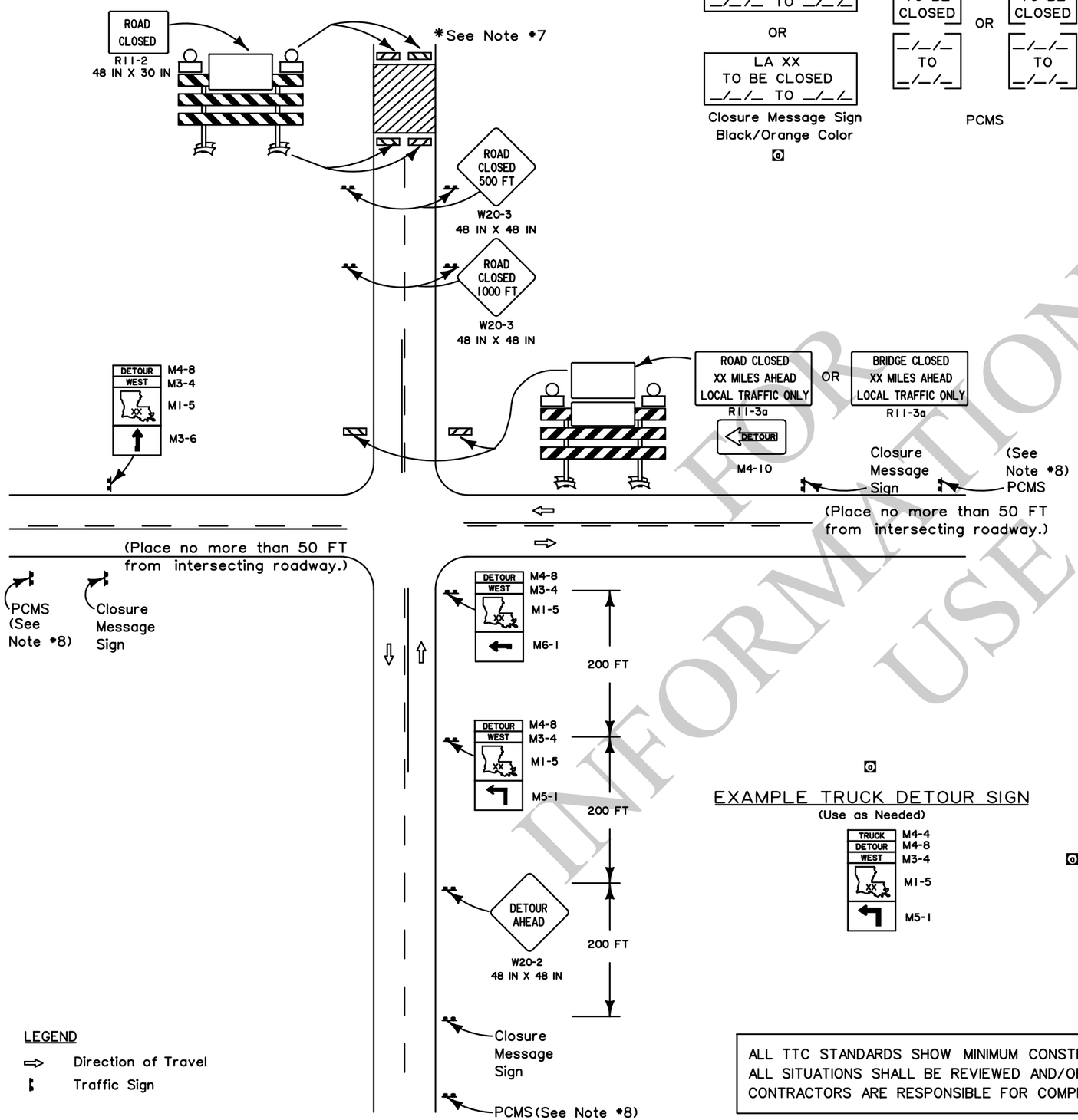

LEGEND

⇨ Direction of Travel

Traffic Sign

7 DAYS PRIOR TO ROAD CLOSURE

See Note *4 and *8

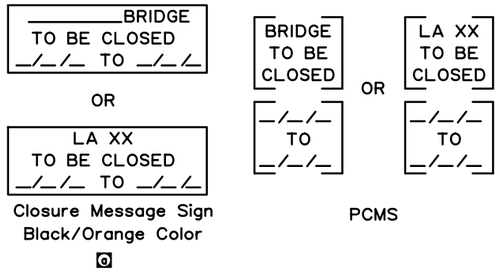

DURATION OF ROAD CLOSURE

See Note *4 and *8

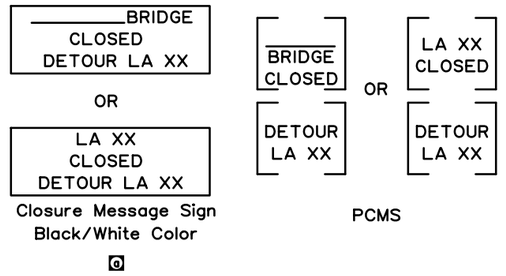

EXAMPLE TRUCK DETOUR SIGN

(Use as Needed)

NOTES

This sheet shall be used with the Temporary Traffic Control General Notes Sheets TTC-00(A), TTC-00(B) and TTC-00(C).

1. This layout represents the generic traffic controls required for road closure on a two-lane roadway. A specific detour plan with all required signs and routes is required for all detours.
2. Any signs in conflict with detour signing shall be removed or covered.
3. Closure Message Sign or PCMS shall be placed 7 days prior to road closure on all approaches to the closure. This sign shall be placed no farther than 50 FT from the work area to be closed.
4. Closure Message Sign or PCMS shall be placed on all approaches to the closure for the duration of the road closure. Minimum letter size on static signs shall be 8 inches.
5. Detour routes shall only be state-maintained routes, unless the project manager has made an agreement with the road owner.
6. Not all detour signs are shown. The DTOE shall approve all detours. The contractor shall be responsible for placing and maintaining all detour signs. There should be a sign at every decision point.
7. The signing is to be mirrored in the opposite direction.
8. PCMS shall be used in addition to the closure message sign on all highways with an ADT greater than 20,000. Place at a location approved by the Engineer.
9. A complete detour map shall be included with the set of plans. If there are changes in the routing, including changes that only affect truck traffic, then the contractor will need to submit them to the Engineer for approval.

ALL TTC STANDARDS SHOW MINIMUM CONSTRUCTION SIGNING.
ALL SITUATIONS SHALL BE REVIEWED AND/OR DESIGNED BY THE ENGINEER.
CONTRACTORS ARE RESPONSIBLE FOR COMPLYING WITH ALL TTC STANDARDS.

INFORMATIONAL USE FOR

SHEET NUMBER

PARISH | CONTROL SECTION | STATE PROJECT

DESIGN B. BOUCHER | CHECK M. RILOVICH | DETAIL | CHECK | REVIEW | SERIES #

APPROVED BY CHIEF ENGINEER: DATE: Feb. 7, 2025

NO.	DATE	DETOUR CLARIFICATIONS AND MINOR CORRECTIONS / REVISION OR CHANGE ORDER DESCRIPTION	BY
0	4-3-24		BRB

TEMPORARY TRAFFIC CONTROL FOR ROAD CLOSURES

TTC-16

DOTD LOUISIANA DEPARTMENT OF TRANSPORTATION & DEVELOPMENT

TRAFFIC ENGINEERING

SEE TTC-00(A), TTC-00(B) AND TTC-00(C)

LEGEND

- Flashing Arrow Board (Type 'C')
- Work Area
- Direction of Travel
- Work Vehicle
- Police Vehicle with Flashing Lights
- Truck with Green/Amber Light and TMA
- Warning Vehicle with PCMS

NOTES

This sheet shall be used with the Temporary Traffic Control General Notes Sheets TTC-00(A), TTC-00(B) and TTC-00(C).

1. This layout represents the minimum traffic controls required for moving operations, such as striping, street sweeping, etc., on interstates and multi-lane roadways. This layout shall not be used for placing signs or pavement legends along the roadway.
2. Distances between vehicles shall vary and should be adjusted due to drying time and sign obstructions such as overpasses and hills.
3. Striping operation is shown for the right lane. Left lane operation is the same, but opposite. If the roadway is greater than 2 lanes, a traffic control plan will be designed.
4. If a queue greater than 30 minutes (about 2 miles) exists, the contractor shall cease operations and pull over to the shoulder until the queue dissipates.
5. The protection vehicles shall be equipped with a flashing green/amber light and a truck mounted attenuator. This vehicle shall move with work operations not to exceed the roll-ahead distance required by the manufacturer plus 100 feet.
6. All construction vehicles with flashing lights shall use green/amber colors.

ALL TTC STANDARDS SHOW MINIMUM CONSTRUCTION SIGNING.
ALL SITUATIONS SHALL BE REVIEWED AND/OR DESIGNED BY THE ENGINEER.
CONTRACTORS ARE RESPONSIBLE FOR COMPLYING WITH ALL TTC STANDARDS.

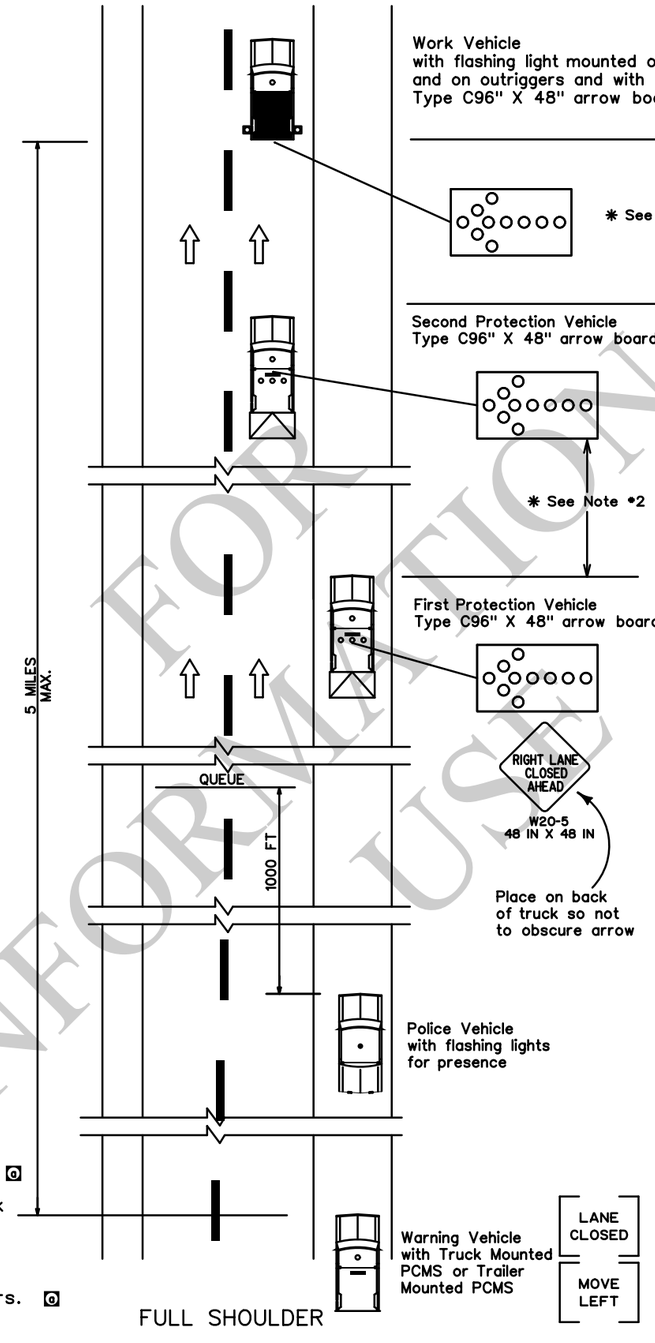

FULL SHOULDER

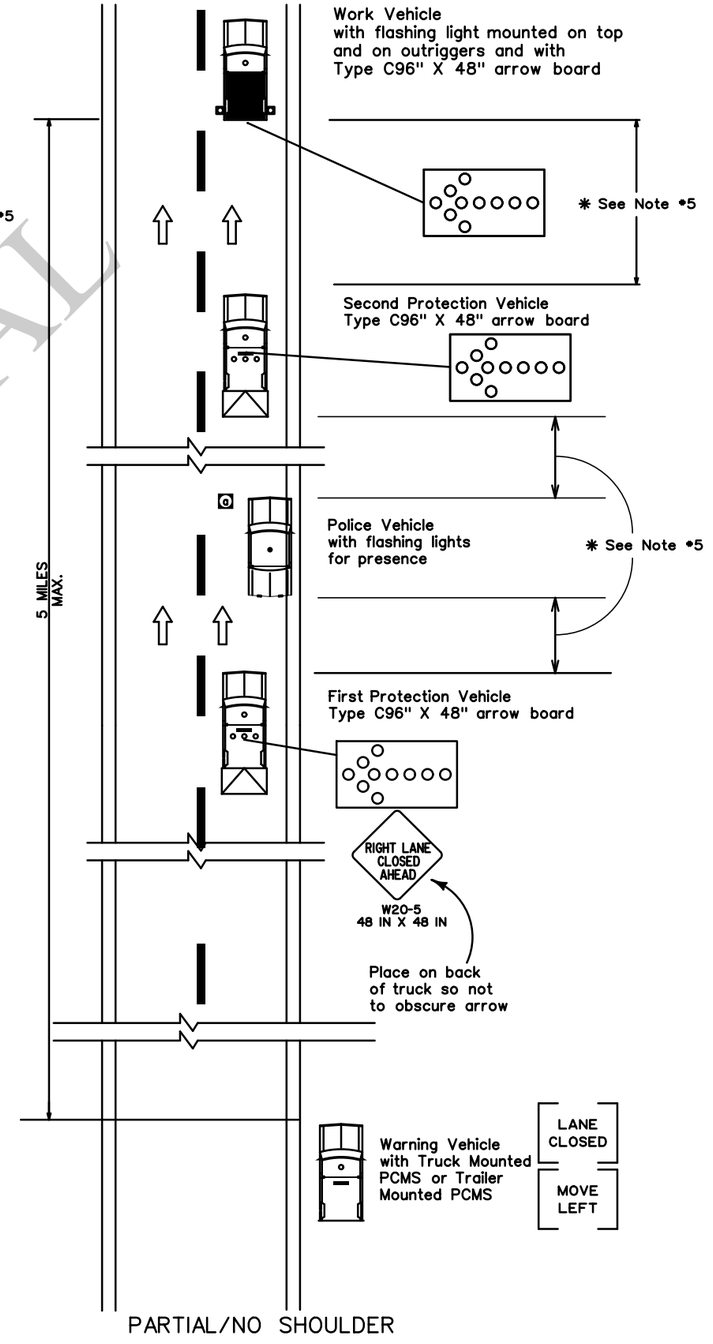

PARTIAL/NO SHOULDER

FOR INFORMATIONAL USE

SHEET NUMBER

PARISH	CONTROL SECTION	STATE PROJECT

DESIGN B. BOUCHER | DETAIL | REVIEW | SERIES *
CHECK M. RILOVICH | CHECK

APPROVED BY CHIEF ENGINEER: DATE: Feb. 7, 2025

NO.	DATE	BY	FIGURE ADJUSTMENTS AND MINOR CORRECTIONS / REVISION OR CHANGE ORDER DESCRIPTION
0	4-3-24	BRB	

STATE OF LOUISIANA DEPARTMENT OF TRANSPORTATION AND DEVELOPMENT

TEMPORARY TRAFFIC CONTROL
MOVING OPERATIONS FOR INTERSTATE AND MULTI-LANE ROADWAYS

TTC-17

DOTD LOUISIANA DEPARTMENT OF TRANSPORTATION & DEVELOPMENT

TRAFFIC ENGINEERING

SEE TTC-00(A), TTC-00(B), AND TTC-00(C)

NOTES

This sheet shall be used with the Temporary Traffic Control General Notes Sheets TTC-00(A), TTC-00(B), and TTC-00(C).

1. This layout represents the minimum traffic controls required for moving operations on two-lane roads with two-way traffic, such as striping, street sweeping, and placement of raised pavement markers.

2. Distances between vehicles may vary and should be adjusted due to drying time and sight obstructions such as overpasses and hills. Vehicles with attenuators shall move with work operations. Buffer space shall not exceed rollahead distance required by the manufacturer plus 100 feet.

3. If a queue greater than 5 minutes (about 1000 feet) exists, the contractor shall cease operations and pull over to the shoulder until the queue dissipates.

4. Flaggers may be used with this layout, if needed. See TTC-00(B).

5. All construction vehicles with flashing lights shall use green/amber colors. ◘

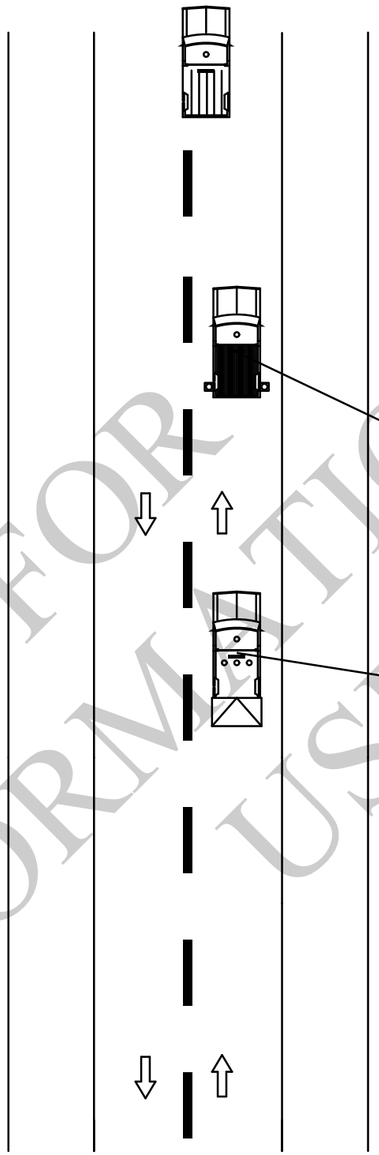

(Optional) Lead Vehicle straddling centerline with flashing lights may be used.

Work Vehicle with flashing light mounted on top and on outriggers and with Type C 96" X 48" arrow board in caution mode

CAUTION
WET PAINT
18 IN X 48 IN

Place this sign on back of work vehicle during striping operations.

First Protection Vehicle with flashing lights and Truck Mounted Attenuator.

ROAD WORK AHEAD *
W20-1
48 IN X 48 IN

OR

CAUTION
STRIPING MACHINE AHEAD
KEEP OFF WET PAINTED LINES
36 IN X 48 IN

Place this sign on back of protection vehicle during striping operations.

LEGEND

- Direction of Travel
- Work Vehicle
- Lead Vehicle
- Protection Vehicle

* Any sign of the W20-1 series may be used.

ALL TTC STANDARDS SHOW MINIMUM CONSTRUCTION SIGNING.
ALL SITUATIONS SHALL BE REVIEWED AND/OR DESIGNED BY THE ENGINEER.
CONTRACTORS ARE RESPONSIBLE FOR COMPLYING WITH ALL TTC STANDARDS.

FOR INFORMATIONAL USE

SHEET NUMBER

PARISH | CONTROL SECTION | STATE PROJECT

DESIGN B. BOUCHER | DETAIL | REVIEW | SERIES *
CHECK M. RILOVICH | CHECK

APPROVED BY CHIEF ENGINEER: DATE: Feb. 7, 2025

NO.	DATE	REVISION OR CHANGE ORDER DESCRIPTION	BY
1	4-3-24	MINOR CORRECTIONS	BRB

TEMPORARY TRAFFIC CONTROL
FOR MOVING OPERATIONS ON
TWO-WAY TWO-LANE ROADWAYS

TTC-18

DOTD
LOUISIANA DEPARTMENT OF TRANSPORTATION & DEVELOPMENT
TRAFFIC ENGINEERING

SEE TTC-00(A), TTC-00(B), AND TTC-00(C)

SIGNAL WORK ON A MULTI-LANE ROADWAY FOR UP TO ONE HOUR

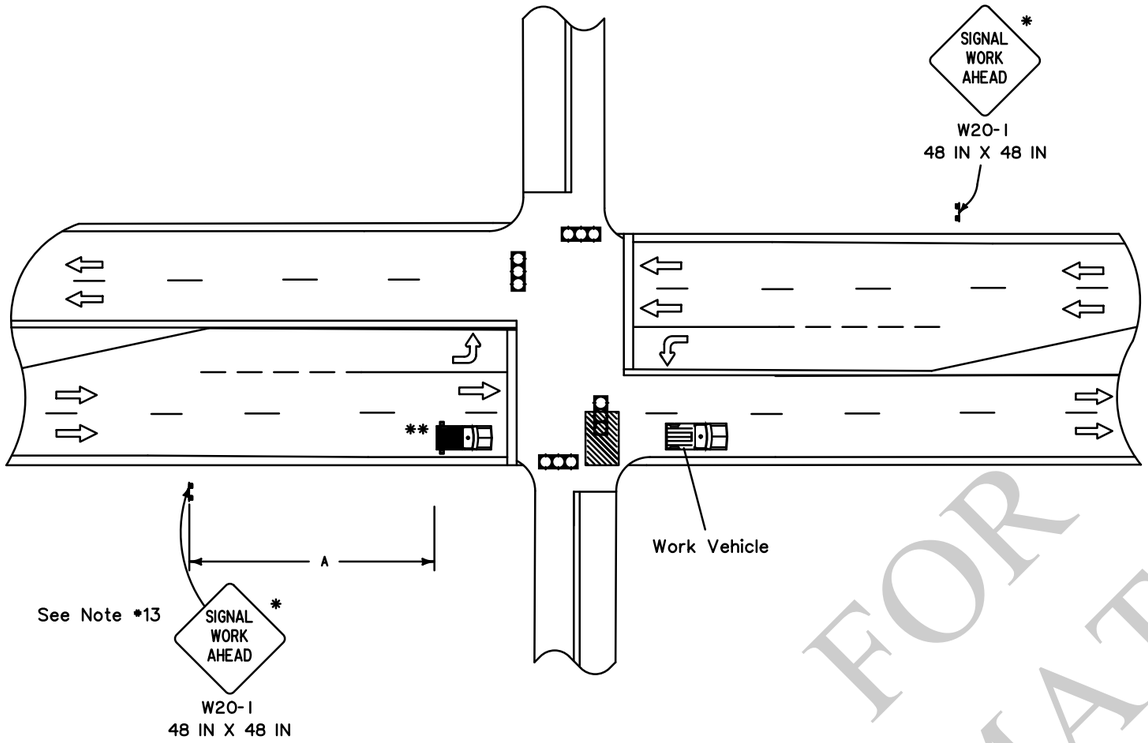

SIGNAL WORK ON A TWO-LANE TWO-WAY ROADWAY

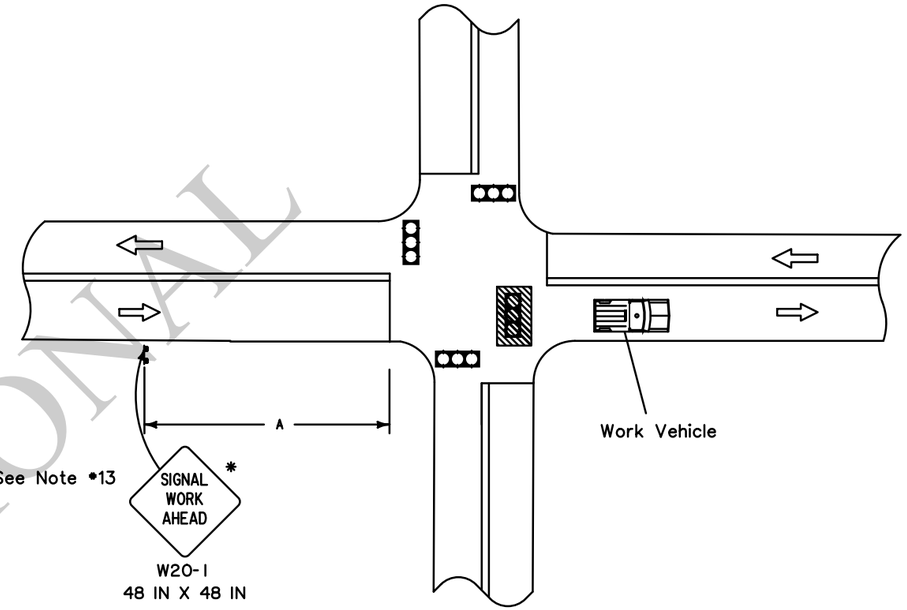

* Any sign of the W20-1 series may be used.

** For posted speed over 45 mph, use TMA.

SPEED LIMIT (prior to construction)	SPACING 'A'
≤ 40 mph	125 FT
45-50 mph	350 FT
> 50 mph	500 FT

LEGEND

- Traffic Sign
- Work Vehicle
- Truck with Flashing Arrow Panel
- Work Area
- Direction of Travel
- Traffic Signal

NOTES

This sheet shall be used with the Temporary Traffic Control General Notes Sheets TTC-00(A), TTC-00(B), and TTC-00(C).

1. This layout represents the minimum traffic controls required during signal construction and maintenance.
2. For projects with multiple signals, the contractor shall construct only one signal at a time.
3. If the signal at an intersection is turned off, the intersection may operate as a 4-way stop with approval by the Engineer and the DTOE. The contractor shall be responsible for installing and removing all stop signs at the intersection.
4. A detour plan is required if the road will be closed to through traffic at all approaches.
5. A uniformed police officer shall direct traffic for short duration lane closures and signal turn-ons.
6. The turn lane may be used as a through lane if a minimum 10-foot lateral clearance can be maintained and opposing traffic is not impeded.
7. A signal timing and phasing plan shall be developed for each phase of construction.
8. Place "Road Work Ahead" sign prior to an intersecting alternate route, no more than 1500 feet from the work area.
9. The sign height shall be at least 7 feet in business, commercial, and residential areas and also near parking, pedestrians, bicyclists, or other obstructions.
10. All work must be done during off-peak hours.
11. The contractor shall not work on both through lanes at the same time.
12. For signal work on a multi-lane roadway greater than 1 hour, see TTC-09 or TTC-10.
13. If the expected or actual queue length exceeds the distance in Table 2C-4 in the MUTCD, place an additional "Signal Work Ahead" sign (W20-1) at the end of the queue.
14. For two-lane two-way roadways, a police car with flashing lights and 2 police officers will be required for intersection traffic control.
15. Left turn lanes shall be closed whenever work is being performed in path of left hand turner.
16. Position of work vehicle may vary according to work required.

ALL TTC STANDARDS SHOW MINIMUM CONSTRUCTION SIGNING.
ALL SITUATIONS SHALL BE REVIEWED AND/OR DESIGNED BY THE ENGINEER.
CONTRACTORS ARE RESPONSIBLE FOR COMPLYING WITH ALL TTC STANDARDS.

FOR INFORMATIONAL USE

SHEET NUMBER

PARISH | CONTROL SECTION | STATE PROJECT

DESIGN B. BOUCHER | CHECK M. RILOVICH | DETAIL | CHECK | REVIEW | SERIES *

APPROVED BY CHIEF ENGINEER: DATE: Feb 7, 2025

NO.	DATE	REVISION OR CHANGE ORDER DESCRIPTION	BY

STATE OF LOUISIANA

TEMPORARY TRAFFIC CONTROL
FOR TRAFFIC SIGNAL INSTALLATION
AND MAINTENANCE AT AN INTERSECTION

TTC-19

DOTD
LOUISIANA DEPARTMENT OF TRANSPORTATION & DEVELOPMENT
TRAFFIC ENGINEERING

GENERAL PROVISIONS

1) Guidance portions of the MUTCD shall be followed unless otherwise noted in an EDSM, The Traffic Engineering Manual, Traffic Signal Manual, Sign Manual, Pavement Marking Manual, or other Traffic Engineering policy requirements.

2) All temporary traffic control (TTC) devices used shall be in accordance with the Louisiana Standard Specifications for Roads and Bridges, the MUTCD, and shall meet MASH requirements for Test Level 3 devices or if not covered by MASH by using the NCHRP Report 350 where applicable.

3) Materials used for TTC shall be in accordance with the Louisiana Standard Specifications for Roads and Bridges and, when applicable, the LADOTD AML.

4) Placement of TTC devices shall not commence without the approval of the Engineer and until work is about to begin, unless they are covered.

5) No lane closures, lane shifts, diversions, or detours shall occur without the approval of the Engineer.

6) Responsibility is hereby placed upon the contractor for the installation, maintenance, and operation of all TTC devices called for in these plans or required by the Engineer for the protection of the traveling public as well as all LADOTD and construction personnel.

7) The contractor shall also be responsible for the maintenance of all permanent signs, pavement markings, and traffic signals left in place as essential to the safe movement and guidance of traffic within the project limits unless noted in the plans.

8) The DTOE shall serve as a technical advisor to the Engineer for all traffic control matters.

9) The Chief Construction Engineer or his appointed designee shall approve all signs and situations not addressed in the plans based on the recommendations of the Project Engineer and the DTOE. All changes shall be noted in all project traffic control diaries.

10) The Chief Construction Engineer or his appointed designee shall approve all design speeds of diversions or shifts, if it differs from design plans, based on the recommendations of the Project Engineer and the DTOE.

11) All temporary traffic control plans shall comply with the Transportation Management Plan.

12) Any additional signs shown in the MUTCD and required by the Engineer shall be installed under Item 713-01-00100.

13) Neither work activity nor storage of equipment, vehicles, TMAs, or materials shall occur within the buffer space.

14) When a work area has been established on one side of the roadway only, there shall be no conflicting operations or parking on the opposite shoulder within 500 feet of the work area.

15) Parking of vehicles or unattended equipment or storage of materials, within the work zone clear zone shall not be permitted unless protected by guardrail or barriers. If the work zone clear zone is not defined on the plan sheets, the Engineer shall verify.

16) Immediately upon removal of existing guardrail, the contractor shall install and maintain a MASH or NCHRP Report 350 approved device to protect the blunt end of the bridge or column until new guardrail is installed. After removal of the existing guardrail, new guardrail should be installed within seven (7) days. If utilized, a TMA is allowed for a maximum of 72 hours.

17) All costs associated with temporary crash devices are to be included under the appropriate pay item.

18) Sight distance should be considered when placing traffic control devices.

19) On all mainline interstates, a minimum of 1.5 feet of paved shoulder on the left and right side shall be maintained at all times.

20) On interstates, NHS routes, truck routes, or roads with more than 5000 ADT and 15% truck traffic, a minimum of 11 foot lanes shall be maintained, unless the existing typical section prevents this. On all other roadways, a 10 foot minimum travel lane should be maintained where practical.

21) TTC Standards are not drawn to scale.

22) The contractor shall develop an internal traffic control plan approved by the Engineer prior to each phase.

23) Truck restrictions such as (but not limited to) restricting lanes, oversize loads, or times of travel may be required for narrow lanes or other field conditions.

24) Temporary concrete barriers shall be placed on a paved surface. This paved surface should follow current design criteria used for paved embankment widening for guardrails.

25) Flare rates for temporary concrete barriers should follow the most current guidance in the AASHTO Roadside Design Guide.

26) Shoulders used for traffic shifts must be capable of supporting freight; otherwise a detour will be required.

PAVEMENT MARKINGS (see AML)

27) All pavement markings within the limits of the project or adjacent to the project limits that are in conflict with the project signing or the required traffic movements shall be removed from the pavement by blast cleaning or grinding. (Existing striping shall not be painted over with black paint or covered with tape.)

28) If special pavement markings are needed they shall be reflectorized, removable, and accompanied by the proper signage.

29) Temporary raised pavement markers may be added to supplement temporary striping in areas of transition, in tapers, in diversions, and in other areas of need as shown in the plans or as directed by the Engineer.

30) Temporary markings installed in the permanent configuration shall comply with LADOTD pavement marking standard plans, MUTCD, and/or the permanent striping plans.

PORTABLE CHANGEABLE MESSAGE SIGNS (PCMS)

31) PCMS shall be used on all Interstate highways. PCMS shall be used on all other roadways (where space is available) with an ADT greater than 20,000.

32) When used in advance of a lane closure or a lane shift, the PCMS should be placed on the right hand side of the road a minimum distance of 2 miles in advance of the taper for interstates and to be determined by the Engineer on other highways.

33) For interstates and multi-lane highways, if vehicles are queuing beyond the 2 mile PCMS, an additional PCMS should be placed on the right hand side of the road approximately 5 miles in advance of the taper or at the end of the queue, whichever is greater.

34) PCMS messages shall be approved by the Engineer. Messages shall be no more than 3 lines and 2 screens.

35) Messages shall display only traffic operational, regulatory, warning, and guidance information. PCMS messages shall not display advertising or safety messages. Messages should only convey information concerning the problem/situation, location, and recommended driver action.

36) PCMS should be placed as far from the traveled lane as possible. They shall be shielded by guardrail or barriers. If this is not possible they shall be delineated with a minimum 3 drum taper spaced at 20ft with a 4th drum alongside the PCMS.

37) If the PCMS encroaches on the improved shoulder then the contractor shall install a shoulder closure.

38) When the PCMS is not displaying a work zone appropriate message pertaining to the ongoing construction project it shall be shielded by guard rail or barriers, or removed from the work zone clear zone.

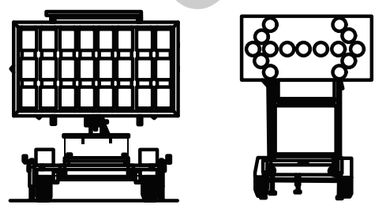

ALL TTC STANDARDS SHOW MINIMUM CONSTRUCTION SIGNING.
ALL SITUATIONS SHALL BE REVIEWED AND/OR DESIGNED BY THE ENGINEER.
CONTRACTORS ARE RESPONSIBLE FOR COMPLYING WITH ALL TTC STANDARDS.

SPEED LIMITS

39) The Engineer may approve a 10 mph drop in the speed limit for posted speeds of 45 mph or greater and for any construction, maintenance, or utility operation that requires one or more of the following:

A) The condition of the traveled way is degraded due to milled surfaces or uneven travel lane lines greater than 1.5 inches.

B) Work is in progress in the immediate vicinity of the travel way requiring lane closures or lane width reductions less than 11 feet.

C) Workers present on the shoulder within 2 feet of the edge of the traveled way without barrier protection.

40) A transition area shall be created to the approved speed that will incrementally step down the speed to what is desired. This reduction will extend only for as long as necessary around the restrictive condition.

41) The reduced speed zone shall only apply to those portions of the project limits affected. The Engineer may allow SPEED LIMIT WHEN FLASHING signs to supplement reduced speed zones.

42) If the speed limit is reduced, speed limit signs shall be placed:

A) Beyond major intersections.

B) At one mile intervals in rural areas.

C) At half mile intervals in urban areas.

43) At the end of the reduced speed zone, a speed limit sign displaying the original speed limit prior to construction shall be installed.

FLASHING ARROW BOARDS

44) All Flashing Arrow Boards shall be 4 feet by 8 feet and Type C.

45) Flashing Arrow Boards should be placed on the shoulder. When there is no shoulder or median area, the arrow board shall be placed within the closed lane behind the channelizing devices and as close to the beginning of the taper as practical.

46) Flashing arrow boards shall be delineated with retroreflective TTC devices.

47) At no time shall the arrow board encroach in the traveled way. When Flashing Arrow Board signs are not being used, they shall be shielded by guard rail or barriers, or removed.

48) Arrow boards shall only be used for lane reduction tapers and shall not be used for lane shifts.

ABBREVIATIONS

AASHTO	——	American Association of State Highway and Transportation Officials
ADT	——	Average Daily Traffic
AGC	——	Associated General Contractors of America
ADA	——	Americans with Disabilities Act
AML	——	Approved Materials List
ANSI	——	American National Standards Institute
ATSSA	——	American Traffic Safety Services Association
B.O.P.	——	Beginning of Project
DTOE	——	District Traffic Operations Engineer
E.O.P.	——	End of Project
LADOTD	——	Louisiana Department of Transportation and Development
MASH	——	AASHTO Manual for Assessing Safety Hardware
MUTCD	——	Manual on Uniform Traffic Control Devices
NCHRP	——	National Cooperative Highway Research Program
NHS	——	National Highway System
PCMS	——	Portable Changeable Message Sign
PROWAG	——	Public Rights-of-Way Accessibility Guidelines
TMA	——	Truck Mounted Attenuator
TMC	——	Traffic Management Center
TTC	——	Temporary Traffic Control
TTC Standards	——	Temporary Traffic Control Standard Plans

INFORMATIONAL USE

SHEET NUMBER

PARISH	CONTROL SECTION	STATE PROJECT

DESIGN	G. Dunn	DETAIL	G. Dunn	REVIEW	SERIES #
CHECK	B. Boucher	CHECK	B. Boucher		

APPROVED BY CHIEF ENGINEER: DATE: 5/21/2024

NO.	DATE	REVISION OR CHANGE ORDER DESCRIPTION	BY
b	5-12-26	General corrections	
a	6-12-25	General changes and text added	

STATE OF LOUISIANA

TEMPORARY TRAFFIC CONTROL

GENERAL NOTES SHEET

TTC-00 (A)

DOTD LOUISIANA DEPARTMENT OF TRANSPORTATION & DEVELOPMENT

STANDARD PLAN

SIGNS

1) All signs used for temporary traffic control shall follow the plans, the LADOTD TTC Standards, and the MUTCD.

2) Signs shown in the TTC illustrations are typical and may vary with each specific condition.

3) One Type B High Intensity light shall be used to supplement the first sign (or pair of signs) that gives warning about a lane closure during nighttime operations.

4) Mesh rollup signs shall not be allowed on any project.

5) Contractor shall use caution not to damage existing signs which remain in place. Any LADOTD signs damaged by work operations shall be replaced by the contractor under item 713-01-00100.

6) All signs (permanent and temporary) shall be removed or completely covered with a strong, lightweight, opaque material when no longer applicable. Burlap is not an acceptable material to cover signs.

7) At no time shall signs warning against a particular operation be left in place once the operation has been completed or where the condition has been removed.

8) Warning signs used for temporary traffic controls shall meet the following guidelines unless otherwise noted in the plans:

A) Size shall be 48 inches by 48 inches.

B) See the Louisiana Standard Specifications for Roads and Bridges and the AML for sheeting information.

C) Lateral distance of signs shall be a minimum of 6 feet from the edge of shoulder or edge of pavement if no shoulder exists and 2 feet from the back of curb in urban areas (see diagram).

9) When portable sign frames are not in use they shall be moved to an area inaccessible to traffic and not visible to the driver.

10) Left side mounted signs will not be required for roadways with a center left turn lane and for undivided roadways.

11) Vinyl roll up signs and 1 foot portable sign stands may be used if the work zone is in place for 3 days or less. Signs or stands may not be used if there are more than 2 lanes in each direction and if signs do not meet all size, color, retroreflectivity, and MASH requirements or NCHRP Report 350. b

12) All signs shall be visible to the drivers (i.e. no obstructions such as on street parking or other traffic control devices shall block the sign).

13) On divided highways, signs shall be placed on the right and the left as shown on the TTC standards.

14) Sign posts:

A) Signs measuring 10 square feet or less shall be mounted on 1 rigid post.

B) Signs over 10 square feet shall be mounted on 2 rigid posts.

C) Signs over 20 square feet shall be mounted on at least 3 rigid posts.

15) Rigid sign supports shall be driven to a minimum depth of 3 feet. If splicing is required, see Allowable Lap Splice U-channel Post.

16) For sign height, see the Rural and Urban diagrams:

Urban:

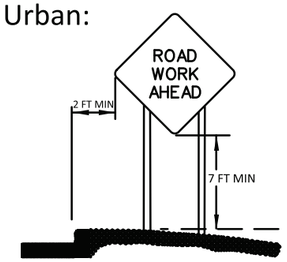

LANE CLOSURES

17) All proposed lane, road, or shoulder closures shall be reviewed by the DTOE and approved by the Engineer.

18) Two lane, two-way highways shall have a maximum work area of two miles; all other roadways shall have a four mile maximum work area.

19) A queue analysis shall be performed prior to approval of lane closures on all freeways and expressways according to Section 6A.1 of the Traffic Engineering Manual. Q

20) Closure plans and times shall be turned in to the Engineer for review according to the following:

A) Five working days minimum if traffic control plan has been approved or is contained in the plans.

B) Ten working days minimum and a traffic control plan must be submitted for lane closures not addressed in the plans.

21) Weekly updates to the DTOE, Project Engineer, the LADOTD TMC operator, and the regional TMC operator (if applicable) will be required for all ongoing lane closures to update the closure status.

22) Daily updates to the DTOE, Project Engineer, and TMC operator (if applicable) will be required for all projects where active closures are in place.

FLAGGERS

23) All flaggers shall be qualified.

24) The contractor shall be responsible for training or assuring that all flaggers are qualified to perform flagging duties.

25) A Qualified Flagger is one that has completed courses such as those offered by ATSSA or other courses approved by the LADOTD Work Zone Task Force. The contractor shall be responsible for getting the flagger course approved.

26) When utilized, a flagger shall use a minimum 18 inch octagonal shape sign on a minimum 6 foot stop/slow paddle and wear ANSI Class 2 Lime Green vest during day time operations and ANSI Class 3 Lime Green ensemble during night operations.

27) In all flagging operations, the flagger must be visible from the flagger advance warning sign. b

28) Flaggers shall not be used on Interstate highways.

ALLOWABLE LAP SPLICE FOR U-CHANNEL POST

29) U-Channel posts may be spliced where long lengths are required. The upper section shall overlap the lower section by at least 24 inches. The bottom edge of the upper section of the splice shall be a minimum of 24 inches above the ground. The spliced sections shall be secured with at least four 5/16 inch diameter hex bolts spaced equally along the splice.

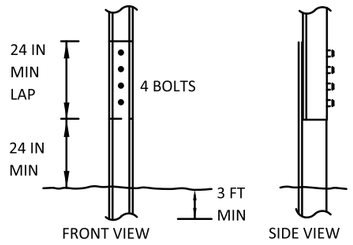

REFERENCES

The contractor shall be responsible for understanding all rules and requirements in the current edition of the following documents:

1) Louisiana Standard Specifications for Roads and Bridges: https://www.dotd.la.gov/about/office-of-engineering/publications-and-downloads/specifications-and-standards/specifications/

2) Manual on Uniform Traffic Control Devices for Streets and Highways (MUTCD): https://mutcd.fhwa.dot.gov/

3) LADOTD Approved Materials List (AML): https://www.dotd.la.gov/about/office-of-engineering/materials-and-testing/approved-materials-list-aml/

4) LADOTD Traffic Engineering Manual: https://www.dotd.la.gov/about/office-of-engineering/traffic-engineering/manuals-and-policies/

5) National Cooperative Highway Research Program (NCHRP) Report 350: "Guidelines for Work Zones Traffic Control Devices": http://onlinepubs.trb.org/Onlinepubs/nchrp/nchrp_rpt_350-a.pdf

6) NCHRP Report 475: "A Procedure for Assessing and Planning Nighttime Highway Construction and Maintenance": https://onlinepubs.trb.org/Onlinepubs/nchrp/nchrp_rpt_475.pdf

7) NCHRP Report 476: "Guidelines for Design and Operation of Nighttime Traffic Control for Highway Maintenance": https://onlinepubs.trb.org/Onlinepubs/nchrp/nchrp_rpt_476.pdf

8) NCHRP Report 498: "Illumination Guidelines for Nighttime Highway Work": https://onlinepubs.trb.org/Onlinepubs/nchrp/nchrp_rpt_498.pdf

9) U.S. Department of Transportation Federal Highway Administration Traffic Control Handbook for Mobile Operations at Night: https://rosap.ntl.bts.gov/view/dot/38634/dot_38634_DS1.pdf

10) American Association of State Highway and Transportation Officials (AASHTO) Roadside Design Guide.

11) American Traffic Safety Services Association (ATSSA) Quality Guidelines for Work Zone Traffic Control Devices and Features.

Rural:

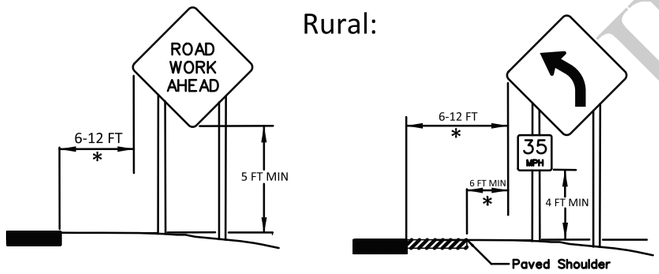

* If lateral distance is not practical, the sign may be placed no less than 2 feet.

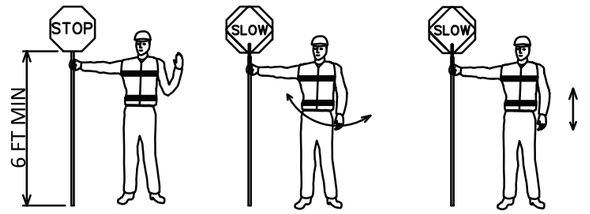

To STOP Traffic

Traffic Proceed Use of Hand Sign

To Alert & SLOW Traffic Use of Hand Sign

ALL TTC STANDARDS SHOW MINIMUM CONSTRUCTION SIGNING.
ALL SITUATIONS SHALL BE REVIEWED AND/OR DESIGNED BY THE ENGINEER.
CONTRACTORS ARE RESPONSIBLE FOR COMPLYING WITH ALL TTC STANDARDS.

FOR INFORMATIONAL PURPOSE

SHEET NUMBER

PARISH | CONTROL SECTION | STATE PROJECT

DESIGN G. Dunn | CHECK B. Boucher | DETAIL G. Dunn | CHECK B. Boucher | REVIEW | SERIES #

APPROVED BY CHIEF ENGINEER: DATE: 5/21/2026

NO.	DATE	REVISION OR CHANGE ORDER DESCRIPTION	BY
2	6-12-25	General corrections	
1	5-12-26	Text Added	

STATE OF LOUISIANA

TEMPORARY TRAFFIC CONTROL

GENERAL NOTES SHEET

TTC-00 (B)

DOTD LOUISIANA DEPARTMENT OF TRANSPORTATION & DEVELOPMENT

STANDARD PLAN

CHANNELIZING DEVICES

1) The following devices may be used as channelizing devices:
tubular markers, vertical panels, cones, drums, and super cones.

2) 28 inch traffic cones are not allowed on:

A) Interstates.

B) Highways with speeds greater than 40 mph.

3) During nighttime operations, 28 inch and 36 inch cones are not allowed.

4) Retroreflective material pattern used on super cones shall match that used on drums.

5) Tangent Areas:

A) Standard Spacing: See Standard Device Spacing and Buffer Space table.

B) Daylight Operations: drums and super cones are spaced at standard spacing. All other devices are at 1/2 standard spacing.

C) Nighttime Operations: drums and supercones at standard spacing are the only devices allowed.

6) Taper Areas:

A) Standard Spacing: See Standard Device Spacing and Buffer Space table.

B) Daylight Operations: drums are spaced at standard spacing. All other devices are 1/2 standard spacing.

C) Nighttime Operations: drums (at standard spacing) are the only devices allowed.

D) Downstream Locations & Flaggers: drums or supercones at 20' max spacing. The length of taper shall be between 50' - 100' with a minimum of 6 devices.

7) Type C steady burn lights shall be used on all channelizing devices in the taper as well as the first two devices in the tangent at night.

8) Typical channelizing device lateral placement (do not include when it is used as a divider for opposing directions of traffic) shall be 2 feet off the lane line in the closed lane or shoulder.

9) Devices may be adjusted laterally to accommodate ongoing work in the immediate vicinity but must be returned to the closed lane after the work activity has moved.

10) Channelizing devices on the lane line shall be of the same type.

11) Channelizing devices in each taper shall be of the same type.

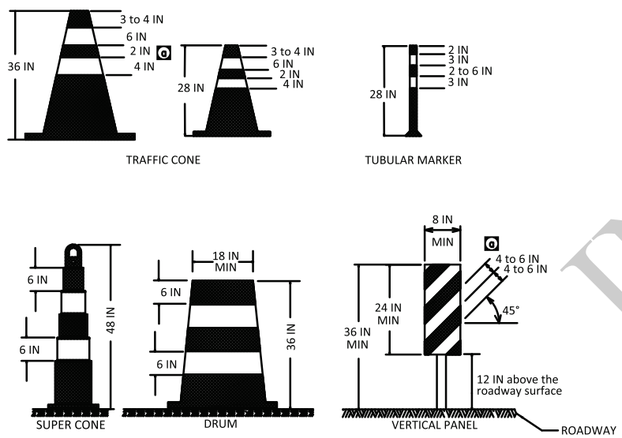

ALL TTC STANDARDS SHOW MINIMUM CONSTRUCTION SIGNING.
ALL SITUATIONS SHALL BE REVIEWED AND/OR DESIGNED BY THE ENGINEER.
CONTRACTORS ARE RESPONSIBLE FOR COMPLYING WITH ALL TTC STANDARDS.

TYPE III BARRICADES

12) Only Type III Barricades shall be used in the roadway or shoulder. All barricades shall use Type 3 High Intensity Sheeting on both sides of the barricade.

13) All barricades shall be a minimum of 8 feet in length and must meet MASH or NCHRP Report 350 requirements.

14) When used for overnight closures, two Type B High Intensity Lights shall supplement all barricades that are placed in a closed lane or that extend across a highway. Two Type A Low Intensity Lights may be used in urban areas if approved by the Engineer.

15) When signs and lights are to be mounted to a barricade, they must meet MASH or NCHRP Report 350 requirements.

16) A truck with a TMA may be substituted for a barricade when workers are present.

17) Barricades shall be placed:

A) At the beginning of a closed lane or shoulder and at 1,000 foot intervals where no active work is ongoing and the lane must remain closed. A minimum of 2 barricades shall be placed if the lane or shoulder closure is less than 2,000 feet. One barricade shall be placed at the beginning of the lane closure after the buffer space and one shall be placed in the middle of the lane closure.

B) Before each or group of unfilled holes or holes filled with temporary material.

C) Before uncured concrete.

D) In the closed lane on each side of every intersection and crossover. Do not block sight distance.

E) In front of piles of material (dirt, aggregate, broken concrete), culverts, and equipment which is near the work zone.

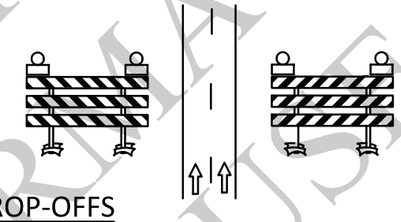

TTC for DROP-OFFS

NON-INTERSTATE:

Average Drop-off	Current Posted Speed (Prior to Construction)	
	> 45 MPH	≤ 45 MPH
≤ 3 Inches	Low Shoulder Sign (Optional)	Low Shoulder Sign (Optional)
> 3 IN ≤ 6 IN	Shoulder Drop-Off Sign & Edge Lines or Shoulder Drop-Off Sign & Channelizing Device	Shoulder Drop-Off Sign
> 6 IN ≤ 10 IN	No Shoulder Sign, Edge Lines, & Vertical Panel	No Shoulder Sign & Channelizing Device
> 10 IN	Concrete Barrier (if drop-off is < 12 FT from edge of travel lane) & Edge Lines	No Shoulder Sign & Vertical Panel

INTERSTATE:

Average Drop-off	
≤ 2 Inches	Low Shoulder Sign (Optional)
> 2 IN ≤ 6 IN	Shoulder Drop-Off Sign & Edge Lines or Shoulder Drop-Off Sign & Channelizing Device
> 6 IN	Concrete Barrier (if drop-off is < 12 FT from edge of travel lane), Shoulder Drop-Off Sign, & Edge Lines

- If a portable concrete barrier will be required, then space shall be provided to ensure the barrier does not deflect into the work area.
- For Interstate ramps, refer to non-Interstate drop-offs.

STANDARD DEVICE SPACING AND BUFFER SPACE

Speed limit (Prior to Construction)	MERGING TAPER LENGTH (L) Lane Width (FT)				STANDARD DEVICE SPACING IN FEET		Buffer Space
MPH	9	10	11	12	Along Taper	Along Tangent	FT
25	94	105	115	125	20	40	155
30	135	150	165	180	30	60	200
35	184	205	225	245	35	70	250
40	240	267	294	320	40	80	305
45	405	450	495	540	40	80	360
50	450	500	550	600	40	80	425
55	495	550	605	660	40	80	495
60	540	600	660	720	40	80	570
65	585	650	715	780	40	80	645
70	630	700	770	840	40	80	730
75	675	750	825	900	40	80	820

Speed limit (Prior to Construction)	SHIFTING TAPER LENGTH (1/2 L) Shoulder Width (FT)						STANDARD DEVICE SPACING IN FEET		Buffer Space
MPH	2	4	6	8	10	12	Along Taper	Along Tangent	FT
25	11	21	32	42	52	63	20	40	155
30	15	30	45	60	75	90	30	60	200
35	21	41	62	82	102	123	35	70	250
40	27	54	80	107	134	160	40	80	305
45	45	90	135	180	225	270	40	80	360
50	50	100	150	200	250	300	40	80	425
55	55	110	165	220	275	330	40	80	495
60	60	120	180	240	300	360	40	80	570
65	65	130	195	260	325	390	40	80	645
70	70	140	210	280	350	420	40	80	730
75	75	150	225	300	375	450	40	80	820

Speed limit (Prior to Construction)	SHOULDER TAPER LENGTH (1/3 L) Shoulder Width (FT)						STANDARD DEVICE SPACING IN FEET		Buffer Space
MPH	2	4	6	8	10	12	Along Taper	Along Tangent	FT
25	7	14	21	28	35	42	20	40	155
30	10	20	30	40	50	60	30	60	200
35	14	28	41	55	68	82	35	70	250
40	18	36	54	72	89	107	40	80	305
45	30	60	90	120	150	180	40	80	360
50	34	67	100	134	167	200	40	80	425
55	37	74	110	147	184	220	40	80	495
60	40	80	120	160	200	240	40	80	570
65	44	87	130	174	217	260	40	80	645
70	47	94	140	187	234	280	40	80	730
75	50	100	150	200	250	300	40	80	820

- See MUTCD for taper formulas.
- If horizontal curve radius is less than 300 feet, device spacing shall be 25 feet.

FOR INFORMATIONAL USE

SHEET NUMBER

PARISH | CONTROL SECTION | STATE PROJECT

DESIGN G. Dunn | CHECK B. Boucher | DETAIL G. Dunn | CHECK B. Boucher | REVIEW | SERIES #

APPROVED BY CHIEF ENGINEER: DATE: 5/21/2026

NO.	DATE	REVISION OR CHANGE ORDER DESCRIPTION	BY
2	5-12-26	General corrections	
1	6-12-25	Text added and numbers adjusted	

STATE OF LOUISIANA DEPARTMENT OF TRANSPORTATION AND DEVELOPMENT

TEMPORARY TRAFFIC CONTROL

GENERAL NOTES SHEET

TTC-00 (C)

DOTD LOUISIANA DEPARTMENT OF TRANSPORTATION & DEVELOPMENT

STANDARD PLAN

CHANNELIZING DEVICES

1) The following devices may be used as channelizing devices:
tubular markers, vertical panels, cones, drums, and super cones.

2) 28 inch traffic cones are not allowed on:

A) Interstates.

B) Highways with speeds greater than 40 mph.

3) During nighttime operations, 28 inch and 36 inch cones are not allowed.

4) Retroreflective material pattern used on super cones shall match that used on drums.

5) Tangent Areas:

A) Standard Spacing: See Standard Device Spacing and Buffer Space table.

B) Daylight Operations: drums and super cones are spaced at standard spacing. All other devices are at 1/2 standard spacing.

C) Nighttime Operations: drums and supercones at standard spacing are the only devices allowed.

6) Taper Areas:

A) Standard Spacing: See Standard Device Spacing and Buffer Space table.

B) Daylight Operations: drums are spaced at standard spacing. All other devices are 1/2 standard spacing.

C) Nighttime Operations: drums (at standard spacing) are the only devices allowed.

D) Downstream Locations & Flaggers: drums or supercones at 20' max spacing. The length of taper shall be between 50' - 100' with a minimum of 6 devices.

7) Type C steady burn lights shall be used on all channelizing devices in the taper as well as the first two devices in the tangent at night.

8) Typical channelizing device lateral placement (do not include when it is used as a divider for opposing directions of traffic) shall be 2 feet off the lane line in the closed lane or shoulder.

9) Devices may be adjusted laterally to accommodate ongoing work in the immediate vicinity but must be returned to the closed lane after the work activity has moved.

10) Channelizing devices on the lane line shall be of the same type.

11) Channelizing devices in each taper shall be of the same type.

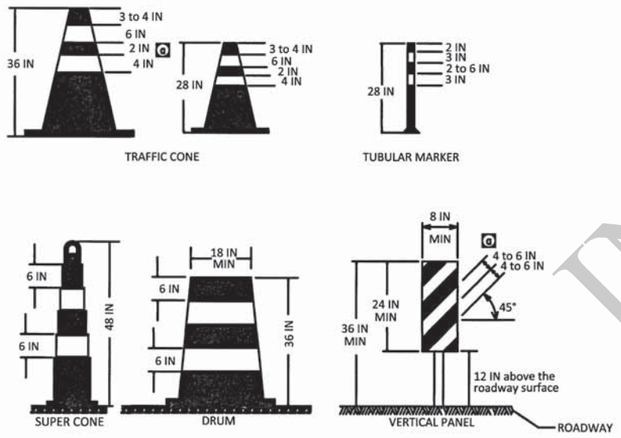

ALL TTC STANDARDS SHOW MINIMUM CONSTRUCTION SIGNING.
ALL SITUATIONS SHALL BE REVIEWED AND/OR DESIGNED BY THE ENGINEER.
CONTRACTORS ARE RESPONSIBLE FOR COMPLYING WITH ALL TTC STANDARDS.

TYPE III BARRICADES

12) Only Type III Barricades shall be used in the roadway or shoulder. All barricades shall use Type 3 High Intensity Sheeting on both sides of the barricade.

13) All barricades shall be a minimum of 8 feet in length and must meet MASH or NCHRP Report 350 requirements.

14) When used for overnight closures, two Type B High Intensity Lights shall supplement all barricades that are placed in a closed lane or that extend across a highway. Two Type A Low Intensity Lights may be used in urban areas if approved by the Engineer.

15) When signs and lights are to be mounted to a barricade, they must meet MASH or NCHRP Report 350 requirements.

16) A truck with a TMA may be substituted for a barricade when workers are present.

17) Barricades shall be placed:

A) At the beginning of a closed lane or shoulder and at 1,000 foot intervals where no active work is ongoing and the lane must remain closed. A minimum of 2 barricades shall be placed if the lane or shoulder closure is less than 2,000 feet. One barricade shall be placed at the beginning of the lane closure after the buffer space and one shall be placed in the middle of the lane closure.

B) Before each or group of unfilled holes or holes filled with temporary material.

C) Before uncured concrete.

D) In the closed lane on each side of every intersection and crossover. Do not block sight distance.

E) In front of piles of material (dirt, aggregate, broken concrete), culverts, and equipment which is near the work zone.

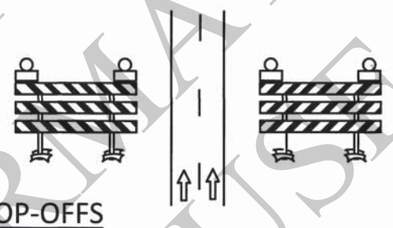

TTC for DROP-OFFS

NON-INTERSTATE:

Average Drop-off	Current Posted Speed (Prior to Construction)	
	> 45 MPH	≤ 45 MPH
≤ 3 Inches	Low Shoulder Sign (Optional)	Low Shoulder Sign (Optional)
> 3 IN ≤ 6 IN	Shoulder Drop-Off Sign & Edge Lines or Shoulder Drop-Off Sign & Channelizing Device	Shoulder Drop-Off Sign
> 6 IN ≤ 10 IN	No Shoulder Sign, Edge Lines, & Vertical Panel	No Shoulder Sign & Channelizing Device
> 10 IN	Concrete Barrier (if drop-off is < 12 FT from edge of travel lane) & Edge Lines	No Shoulder Sign & Vertical Panel

INTERSTATE:

Average Drop-off	
≤ 2 Inches	Low Shoulder Sign (Optional)
> 2 IN ≤ 6 IN	Shoulder Drop-Off Sign & Edge Lines or Shoulder Drop-Off Sign & Channelizing Device
> 6 IN	Concrete Barrier (if drop-off is < 12 FT from edge of travel lane), Shoulder Drop-Off Sign, & Edge Lines

- If a portable concrete barrier will be required, then space shall be provided to ensure the barrier does not deflect into the work area.
- For Interstate ramps, refer to non-Interstate drop-offs.

STANDARD DEVICE SPACING AND BUFFER SPACE

Speed limit (Prior to Construction)	MERGING TAPER LENGTH (L) Lane Width (FT)				STANDARD DEVICE SPACING IN FEET		Buffer Space
MPH	9	10	11	12	Along Taper	Along Tangent	FT
25	94	105	115	125	20	40	155
30	135	150	165	180	30	60	200
35	184	205	225	245	35	70	250
40	240	267	294	320	40	80	305
45	405	450	495	540	40	80	360
50	450	500	550	600	40	80	425
55	495	550	605	660	40	80	495
60	540	600	660	720	40	80	570
65	585	650	715	780	40	80	645
70	630	700	770	840	40	80	730
75	675	750	825	900	40	80	820

Speed limit (Prior to Construction)	SHIFTING TAPER LENGTH (1/2 L) Lane Shift (FT)						STANDARD DEVICE SPACING IN FEET		Buffer Space
MPH	2	4	6	8	10	12	Along Taper	Along Tangent	FT
25	11	21	32	42	52	63	20	40	155
30	15	30	45	60	75	90	30	60	200
35	21	41	62	82	102	123	35	70	250
40	27	54	80	107	134	160	40	80	305
45	45	90	135	180	225	270	40	80	360
50	50	100	150	200	250	300	40	80	425
55	55	110	165	220	275	330	40	80	495
60	60	120	180	240	300	360	40	80	570
65	65	130	195	260	325	390	40	80	645
70	70	140	210	280	350	420	40	80	730
75	75	150	225	300	375	450	40	80	820

Speed limit (Prior to Construction)	SHOULDER TAPER LENGTH (1/3 L) Shoulder Width (FT)						STANDARD DEVICE SPACING IN FEET		Buffer Space
MPH	2	4	6	8	10	12	Along Taper	Along Tangent	FT
25	7	14	21	28	35	42	20	40	155
30	10	20	30	40	50	60	30	60	200
35	14	28	41	55	68	82	35	70	250
40	18	36	54	72	89	107	40	80	305
45	30	60	90	120	150	180	40	80	360
50	34	67	100	134	167	200	40	80	425
55	37	74	110	147	184	220	40	80	495
60	40	80	120	160	200	240	40	80	570
65	44	87	130	174	217	260	40	80	645
70	47	94	140	187	234	280	40	80	730
75	50	100	150	200	250	300	40	80	820

- See MUTCD for taper formulas.
- If horizontal curve radius is less than 300 feet, device spacing shall be 25 feet.

FOR INFORMATIONAL USE

SHEET NUMBER

PARISH | CONTROL SECTION | STATE PROJECT

DESIGN G. Dunn | CHECK B. Boucher | DETAIL G. Dunn | CHECK B. Boucher | REVIEW | SERIES #

APPROVED BY CHIEF ENGINEER: DATE: 08/19/2024

NO.	DATE	REVISION OR CHANGE ORDER DESCRIPTION	BY
3	7-14-26	Updated text	
2	5-12-26	General corrections	
1	6-12-25	Text added and numbers adjusted	

STATE OF LOUISIANA

TEMPORARY TRAFFIC CONTROL
GENERAL NOTES SHEET
TTC-00 (C)

DOTD LOUISIANA DEPARTMENT OF TRANSPORTATION & DEVELOPMENT

STANDARD PLAN

TWO-WAY ROADWAY

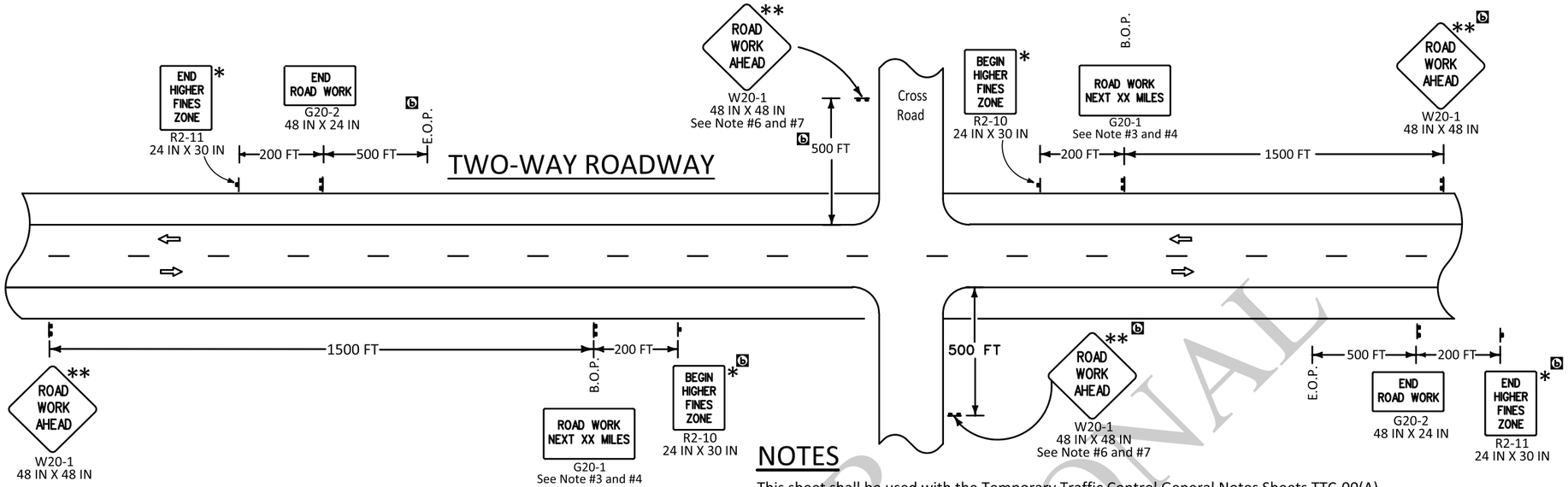

* For divided roadways with speeds ≥ 50 mph use larger sign, 36 IN X 48 IN.

** Any sign of the W20-1 series may be used.

LEGEND

- Traffic Sign
- Direction of Travel

NOTES

This sheet shall be used with the Temporary Traffic Control General Notes Sheets TTC-00(A), TTC-00(B), TTC-00(C), and other Temporary Traffic Control Sheets as appropriate.

1) This layout represents the minimum traffic controls required for placement of "Road Work Next XX Miles" (G20-1) and "End Road Work" (G20-2) signs.

2) This layout does not replace other TTC Standard Sheets, but is intended as a supplement to the required signing.

3) The distance on the "Road Work Next XX Miles" (G20-1) sign shall be rounded up to the nearest whole mile. This sign shall be placed at the Beginning of Project (B.O.P.) limits. This sign may be omitted if work zone is less than 0.5 miles.

4) The "Road Work Next XX Miles" (G20-1) sign shall be a minimum of 60 inches by 36 inches for all multi-lane roadways and a minimum of 48 inches by 24 inches for two-lane roadways unless otherwise noted.

5) The "End Road Work" (G20-2) sign shall be placed 500 feet past the End of Project (E.O.P.) limits.

6) If "Road Work Ahead" (W20-1) sign is used on a cross road to warn of road work on another route, the "End Road Work" sign is not required.

7) When projects are separated by less than 1 mile, they shall be signed as one project; this may require coordination.

8) If the distance between the current working area and beginning of the project exceeds 2500', an additional "Road Work Ahead" (W20-1) sign should be added before the "Reduced Speed Limit Ahead" (W3-5) sign to remind traffic of the work area.

DIVIDED ROADWAY

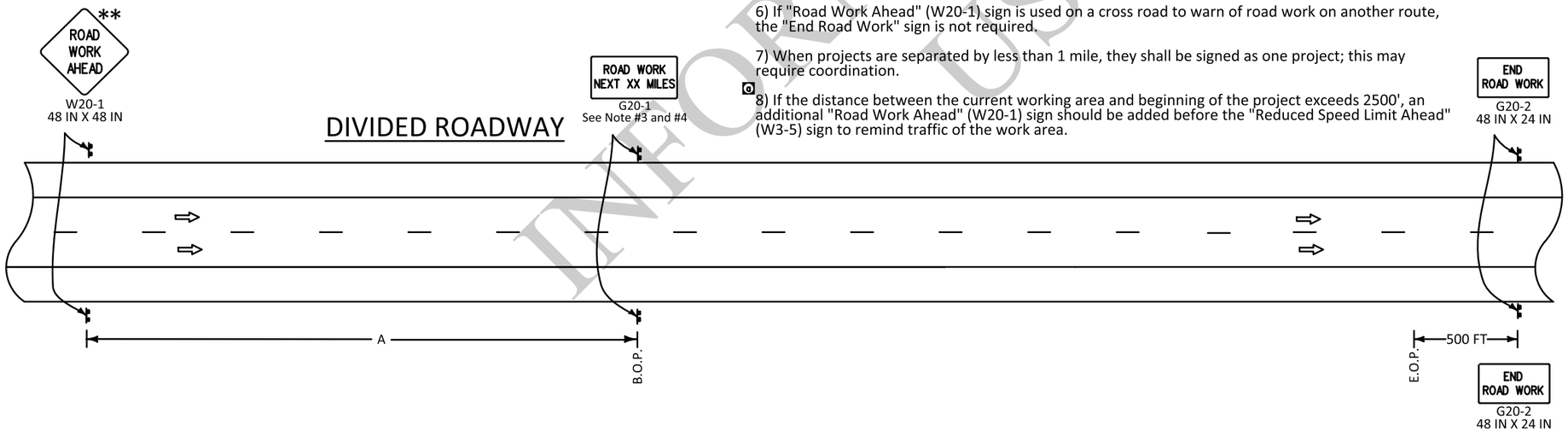

SPEED LIMIT (prior to construction)	SPACING
	A
≤ 40 mph	1500 FT
45 mph	2640 FT
> 45 mph	5280 FT

- Sign spacing to be adjusted for horizontal and vertical curves.
- For work outside of the traveled way, see TTC-01 and TTC-02.

ALL TTC STANDARDS SHOW MINIMUM CONSTRUCTION SIGNING.
ALL SITUATIONS SHALL BE REVIEWED AND/OR DESIGNED BY THE ENGINEER.
CONTRACTORS ARE RESPONSIBLE FOR COMPLYING WITH ALL TTC STANDARDS.

FOR INFORMATIONAL USE

SHEET NUMBER

PARISH	CONTROL SECTION	STATE PROJECT

DESIGN	G. Dunn	DETAIL	G. Dunn	REVIEW	SERIES #
CHECK	B. Boucher	CHECK	B. Boucher		

APPROVED BY CHIEF ENGINEER: DATE: 5/21/2026

NO.	DATE	REVISION OR CHANGE ORDER DESCRIPTION	BY
2	5-12-26	General corrections	
1	6-12-25	Text added	

STATE OF LOUISIANA DEPARTMENT OF TRANSPORTATION AND DEVELOPMENT

TEMPORARY TRAFFIC CONTROL

LAYOUT FOR PLACEMENT OF ROAD WORK NEXT XX MILES AND END ROAD WORK SIGNS

TTC-00 (D)

DOTD LOUISIANA DEPARTMENT OF TRANSPORTATION & DEVELOPMENT

STANDARD PLAN

PEDESTRIANS CONTEXT

1) The detour path shall meet or exceed the ADA compliance of the existing path that is closed. Any temporary paths that are constructed shall be fully ADA compliant.

2) Pedestrians should be provided with a convenient and accessible path that replicates as nearly as practical the most desirable characteristics of the existing sidewalk(s) or footpath(s).

3) Signing advance notification of sidewalk closures shall be provided by the contractor for the public.

4) No storage of construction materials, equipment, and/or vehicles will be permitted on permanent or temporary bicycle, pedestrian, or transit facilities for any duration of time. Debris shall also remain cleared from these locations.

5) Pedestrian channelizing devices shall be crashworthy when exposed to vehicular traffic.

6) When used to close a sidewalk, channelizing devices shall cover the entire width of the sidewalk or other similar facility.

7) Pedestrian channelizing devices shall have continuous detection plates and hand-trailing edges. The details of the pedestrian channelizing device should follow the information provided in section 713.2.050 of the Louisiana Standard Specifications for Roads and Bridges. The top surface of the hand-trailing edge shall be smooth. Both the detection plate and the hand-trailing edge shall share a common vertical plane.

8) Longitudinal channelizing devices shall be interlocked to channelize flow. The interlocking devices shall not have gaps that allow pedestrians to leave the intended path.

9) Audible message devices should be placed on side farthest away from traffic. The audible device detection cone should cover the entire walkway width.

10) When placing a temporary curb ramp, the impacts to the design vehicle turning movements shall be evaluated. Traffic shall be detoured if necessary.

11) Temporary curb ramps are to be used only when the curb height is under 9 inches.

Pedestrian Barrier

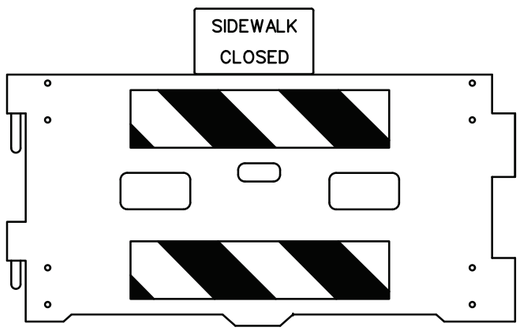

Pedestrian Channelizing Device

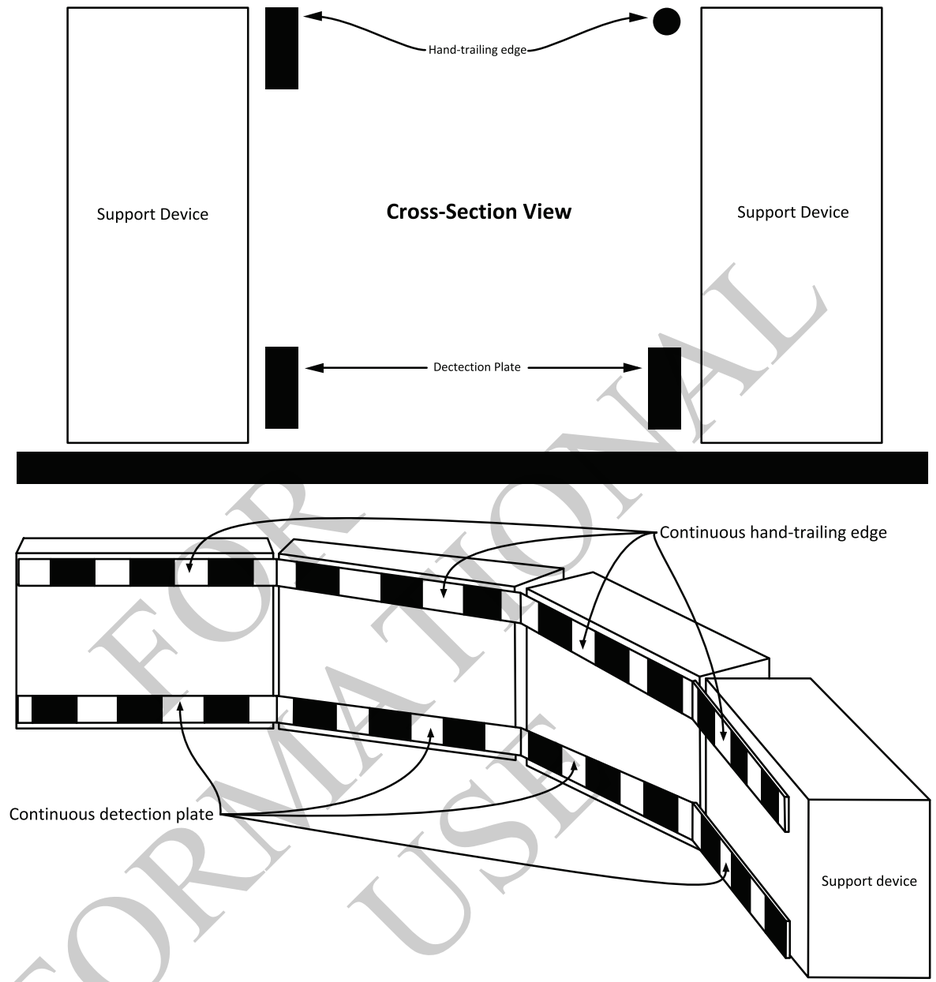

ALL TTC STANDARDS SHOW MINIMUM CONSTRUCTION SIGNING.
ALL SITUATIONS SHALL BE REVIEWED AND/OR DESIGNED BY THE ENGINEER.
CONTRACTORS ARE RESPONSIBLE FOR COMPLYING WITH ALL TTC STANDARDS.

FOR INFORMATIONAL USE

SHEET NUMBER

PARISH	CONTROL SECTION	STATE PROJECT

DESIGN	G. Dunn
CHECK	B. Boucher
DETAIL	G. Dunn
CHECK	B. Boucher
REVIEW	
SERIES #	

APPROVED BY CHIEF ENGINEER: DATE: 5/21/2026

NO.	DATE	REVISION OR CHANGE ORDER DESCRIPTION	BY
	6-12-25	Examples added and texted changed	

STATE OF LOUISIANA DEPARTMENT OF TRANSPORTATION AND DEVELOPMENT

TEMPORARY TRAFFIC CONTROL

GENERAL NOTES SHEET

TTC-00 (E)

DOTD LOUISIANA DEPARTMENT OF TRANSPORTATION & DEVELOPMENT

STANDARD PLAN

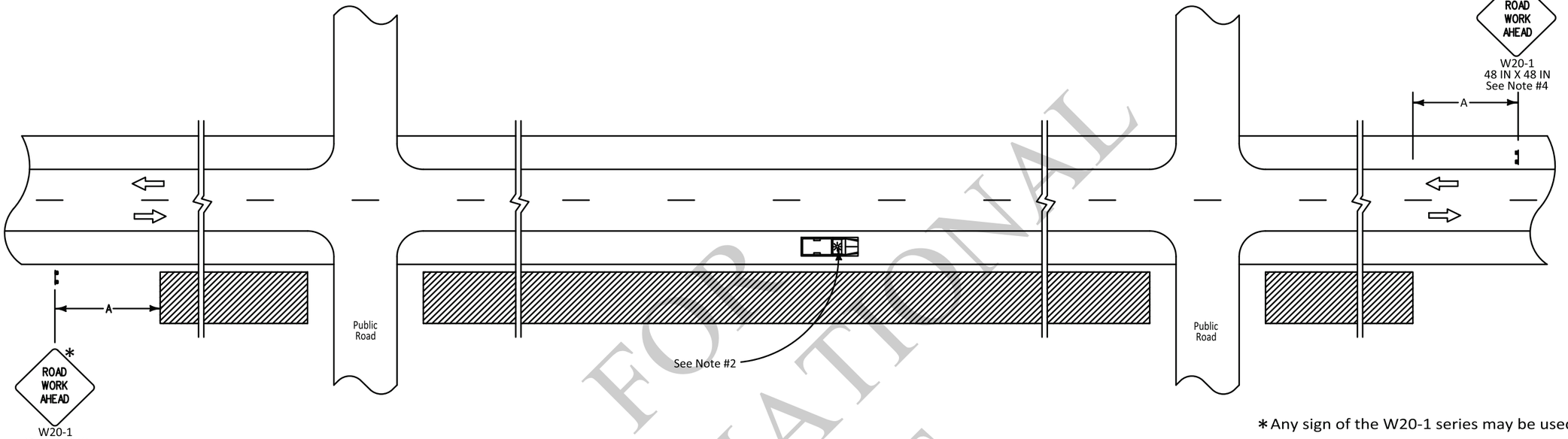

*Any sign of the W20-1 series may be used.

LEGEND

- Traffic Sign
- Work Area
- Direction of Travel
- Truck with Green/Amber Light

SPEED LIMIT (prior to construction)	SPACING
	A
≤ 40 mph	500 FT
45-50 mph	1000 FT
≥ 55 mph	1500 FT

NOTES

This sheet shall be used with the Temporary Traffic Control General Notes Sheets TTC-00(A), TTC-00(B), TTC-00(C), and other Temporary Traffic Control Sheets as appropriate.

1) This layout represents the minimum traffic controls required for workers and equipment operating more than 15 feet from the travel way.

2) If the operation results in equipment or other vehicles being parked closer than 15 feet to the travel way, but not within the road way, each vehicle shall have a green/amber light.

3) When a work area has been established on one side of the roadway only, there shall be no parking on the opposite shoulder within 500 feet of the work area.

4) Other signs may be used in place of the "Road Work Ahead" (W20-1) sign, such as "Mowing" (W21-8), "Utility" (W21-7), or "Survey" (W21-6) when applicable.

ALL TTC STANDARDS SHOW MINIMUM CONSTRUCTION SIGNING.
ALL SITUATIONS SHALL BE REVIEWED AND/OR DESIGNED BY THE ENGINEER.
CONTRACTORS ARE RESPONSIBLE FOR COMPLYING WITH ALL TTC STANDARDS.

FOR INFORMATIONAL USE

SHEET NUMBER

PARISH	CONTROL SECTION	STATE PROJECT

DESIGN	G. Dunn	DETAIL	G. Dunn	REVIEW	SERIES *
CHECK	B. Boucher	CHECK	B. Boucher		

APPROVED BY CHIEF ENGINEER: DATE: 5/21/2026

NO.	DATE	REVISION OR CHANGE ORDER DESCRIPTION	BY
	5-12-26	General corrections	

TEMPORARY TRAFFIC CONTROL
FOR WORK GREATER THAN 15 FEET FROM THE TRAVELED WAY

TTC-01

DOTD LOUISIANA DEPARTMENT OF TRANSPORTATION & DEVELOPMENT

STANDARD PLAN

TWO-WAY ROADWAY

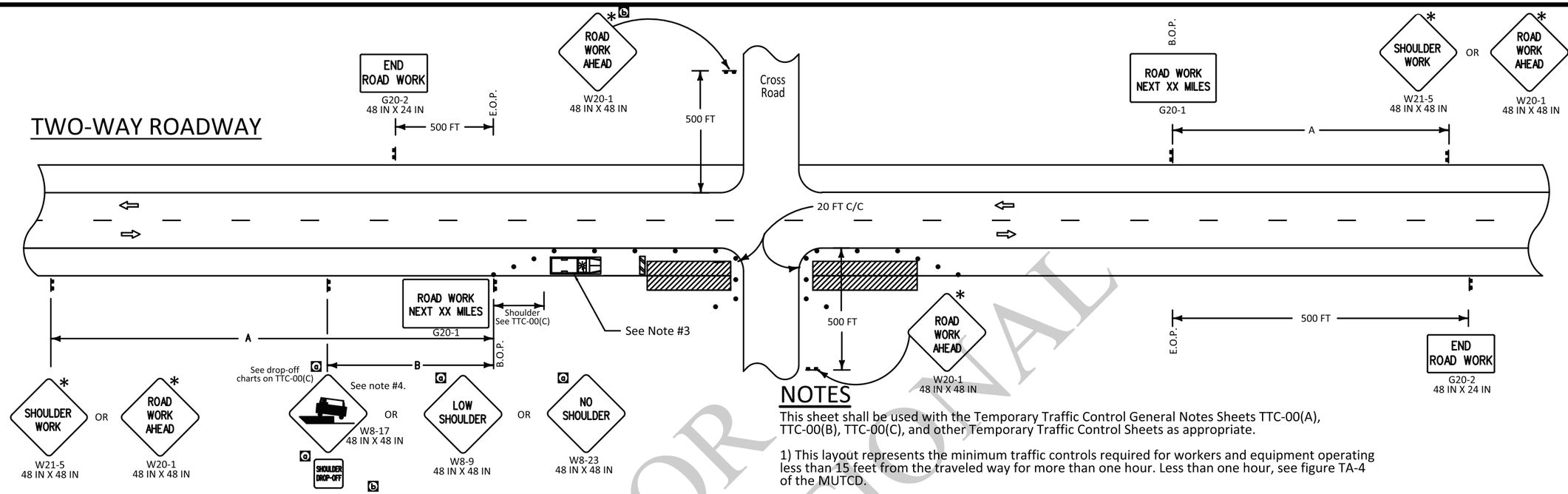

SPEED LIMIT (prior to construction)	SPACING	
	A	B
≤ 40 mph	500 FT	250 FT
45-50 mph	1000 FT	350 FT
≥ 55 mph	1500 FT	500 FT
Expressway/Interstate	2500 FT	1000 FT

• See TTC-00(C) for minimum taper length and maximum device spacing for shoulder closure tapers.

DIVIDED ROADWAY

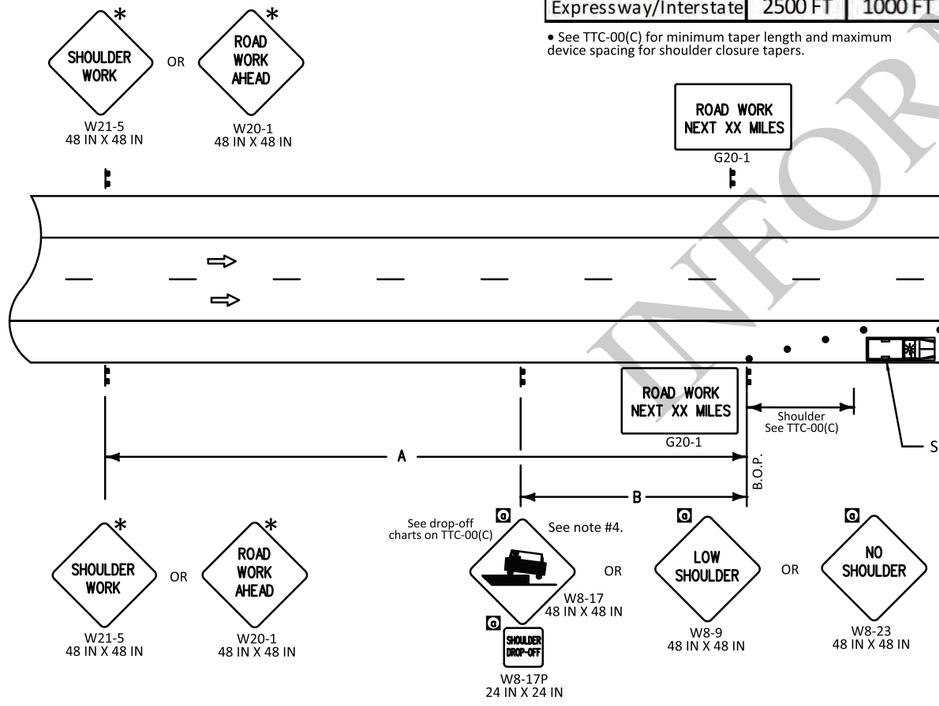

∗ Any sign of the W20-1 or W21-5 series may be used. For divided roadways, these signs are to be placed on both sides of divided highway if shoulder work is being done on left side or if on interstate.

NOTES

This sheet shall be used with the Temporary Traffic Control General Notes Sheets TTC-00(A), TTC-00(B), TTC-00(C), and other Temporary Traffic Control Sheets as appropriate.

1) This layout represents the minimum traffic controls required for workers and equipment operating less than 15 feet from the traveled way for more than one hour. Less than one hour, see figure TA-4 of the MUTCD.

2) No signs or barricades are required for equipment operating or work in progress greater than 15 feet from the traveled way. See TTC-01.

3) Work or equipment confined to a spot location (less than 200 feet) shall be marked by channelizing devices spaced at 25 feet or by a vehicle with a green/amber light visible to traffic. Work extending more than 200 feet of roadway length shall be marked with appropriate devices spaced as noted on TTC-00(C).

4) Applicable drop-off sign options are defined on TTC-00(C).

5) The distance on the "Road Work Next XX Miles" (G20-1) sign shall be rounded up to the nearest whole mile. This sign shall be placed at the Beginning of Project (B.O.P.) limits. This sign may be omitted if work zone is less than 0.5 miles.

6) A vehicle with a flashing green/amber light and a truck mounted attenuator shall be used on all shoulders of all interstates, as well as all roadways with an ADT greater than 20,000 and a pre-construction speed greater than or equal to 40 mph. This vehicle shall move with work operations not to exceed the roll-ahead distance required by the manufacturer plus 100 feet.

7) Device layout around turnouts should be based on the design vehicle.

LEGEND

- Traffic Sign
- Channelizing Devices
- Type III Barricades
- Work Area
- Direction of Travel
- Truck with Green/Amber Light

ALL TTC STANDARDS SHOW MINIMUM CONSTRUCTION SIGNING.
ALL SITUATIONS SHALL BE REVIEWED AND/OR DESIGNED BY THE ENGINEER.
CONTRACTORS ARE RESPONSIBLE FOR COMPLYING WITH ALL TTC STANDARDS.

FOR INFORMATIONAL USE

SHEET NUMBER

PARISH	CONTROL SECTION	STATE PROJECT

DESIGN	G. Dunn
CHECK	B. Boucher
DETAIL	G. Dunn
CHECK	B. Boucher
REVIEW	
SERIES #	

APPROVED BY CHIEF ENGINEER: DATE: 5/21/2026

NO.	DATE	REVISION OR CHANGE ORDER DESCRIPTION	BY
2	6-12-25	General corrections	
1	5-12-26	Sign changed and text added	

STATE OF LOUISIANA

TEMPORARY TRAFFIC CONTROL

LAYOUT FOR WORK LESS THAN 15 FEET FROM THE TRAVELED WAY

TTC-02

DOTD
LOUISIANA DEPARTMENT OF TRANSPORTATION & DEVELOPMENT

STANDARD PLAN

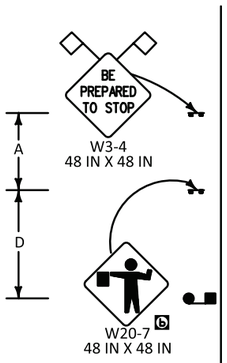

LOCATIONS WITHIN 500' OF AN INTERSECTION

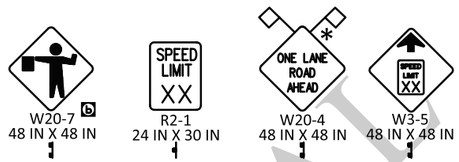

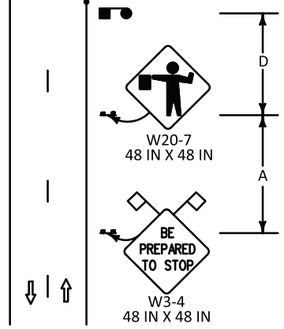

SPEED LIMIT (prior to construction)	SPACING			
	A	B	C	D
≤ 40 mph	500 FT	100 FT	N/A	125 FT
45-50 mph	1000 FT	350 FT	500 FT	350 FT
[b] ≥ 55 mph	1500 FT	500 FT	800 FT	500 FT

LOCATIONS 500' - 1600' AWAY FROM INTERSECTION

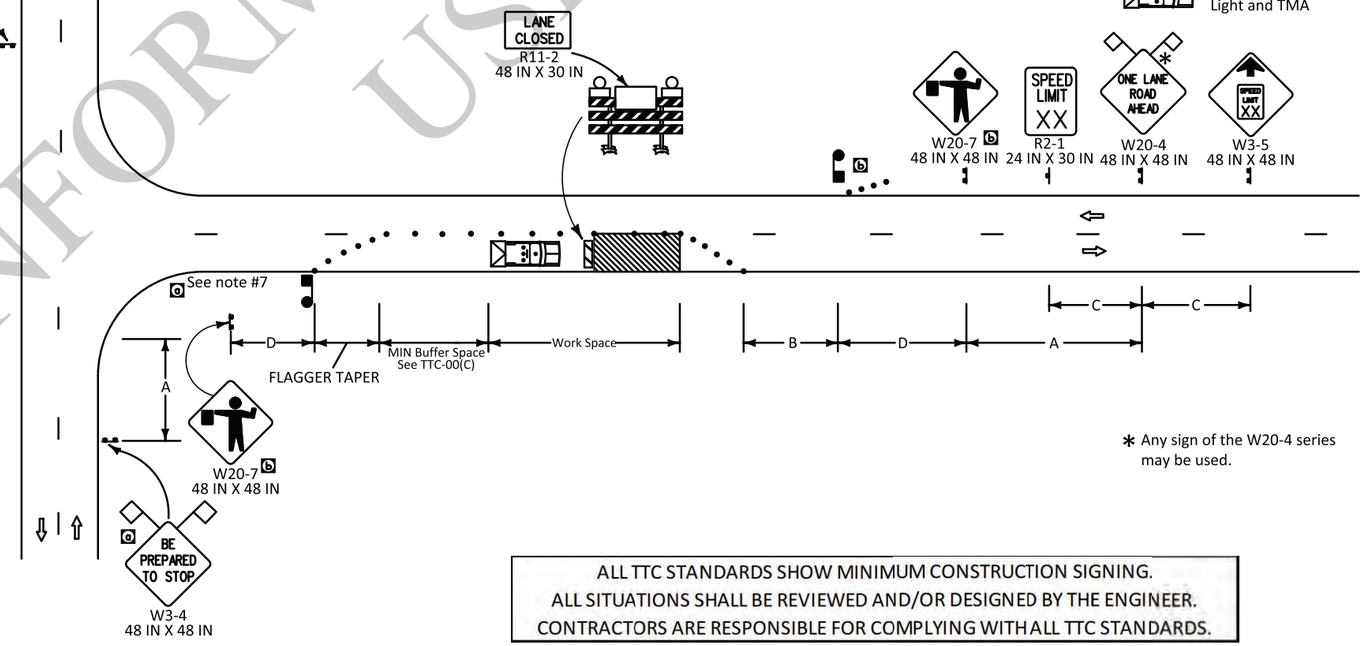

✱ Any sign of the W20-4 series may be used.

ALL TTC STANDARDS SHOW MINIMUM CONSTRUCTION SIGNING.
ALL SITUATIONS SHALL BE REVIEWED AND/OR DESIGNED BY THE ENGINEER.
CONTRACTORS ARE RESPONSIBLE FOR COMPLYING WITH ALL TTC STANDARDS.

PILOT CAR

8) If used, a pilot car shall guide a queue of vehicles through the work zone or diversion.

9) It shall be used in restricted visibility operations such as lime or cement stabilization, chip seals, or operations in hilly or curvy terrains, where flaggers cannot see each other (no clear line-of-sight).

10) The operation of the pilot vehicle shall be coordinated with flagging operations or other controls at each end of the one-lane section and all major driveways and street intersections.

11) The pilot car sign should be mounted 7 feet above roadway in a position visible to oncoming and following traffic.

12) The pilot car shall have a green/amber beacon light.

13) The sign mounted on the vehicle shall be two-sided.

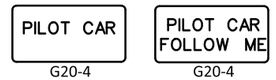

LEGEND

- Traffic Sign
- Channelizing Devices
- Type III Barricades
- Work Area
- Flagger
- Type B Light
- Direction of Travel
- Truck with Green/Amber Light and TMA

NOTES

This sheet shall be used with the Temporary Traffic Control General Notes Sheets TTC-00(A), TTC-00(B), TTC-00(C), TTC-00(D), and other Temporary Traffic Control Sheets as appropriate.

1) This layout represents the minimum traffic controls required for lane closures on two-lane roads with two-way traffic less than 1600 feet from an intersection. For advance signing see TTC-00(D).

2) Visual or radio contact shall be required between flaggers at all times. The flagger shall be visible from flagger sign.

3) Only law officers shall direct traffic against a traffic signal indication.

4) If work area is greater than 1600 feet see TTC-04.

5) If a pilot car is required then the contractor is not required to have channelizing devices in the tangent section.

6) A vehicle with a flashing green/amber light and a truck mounted attenuator shall be used on all roadways with an ADT greater than 20,000 and a pre-construction speed greater than or equal to 40 mph. This vehicle shall move with work operations not to exceed the roll-ahead distance required by the manufacturer plus 100 feet.

[a]

7) If queue for the flagger will back up into the intersection, additional signs on the cross street should be considered.

FOR INFORMATIONAL USE

SHEET NUMBER

PARISH	CONTROL SECTION	STATE PROJECT

DESIGN	G. Dunn	DETAIL	G. Dunn	REVIEW	SERIES #
CHECK	B. Boucher	CHECK	B. Boucher		

APPROVED BY CHIEF ENGINEER: DATE: 5/21/2026

NO.	DATE	REVISION OR CHANGE ORDER DESCRIPTION	BY
[b]	5-12-26	General corrections	
[a]	6-12-25	Text added	

STATE OF LOUISIANA DEPARTMENT OF TRANSPORTATION AND DEVELOPMENT

TEMPORARY TRAFFIC CONTROL

FLAGGING OPERATIONS: LANE CLOSURES LESS THAN 1600' FROM INTERSECTIONS

TTC-03

DOTD LOUISIANA DEPARTMENT OF TRANSPORTATION & DEVELOPMENT

STANDARD PLAN

LOCATIONS > 1600' AWAY FROM INTERSECTION

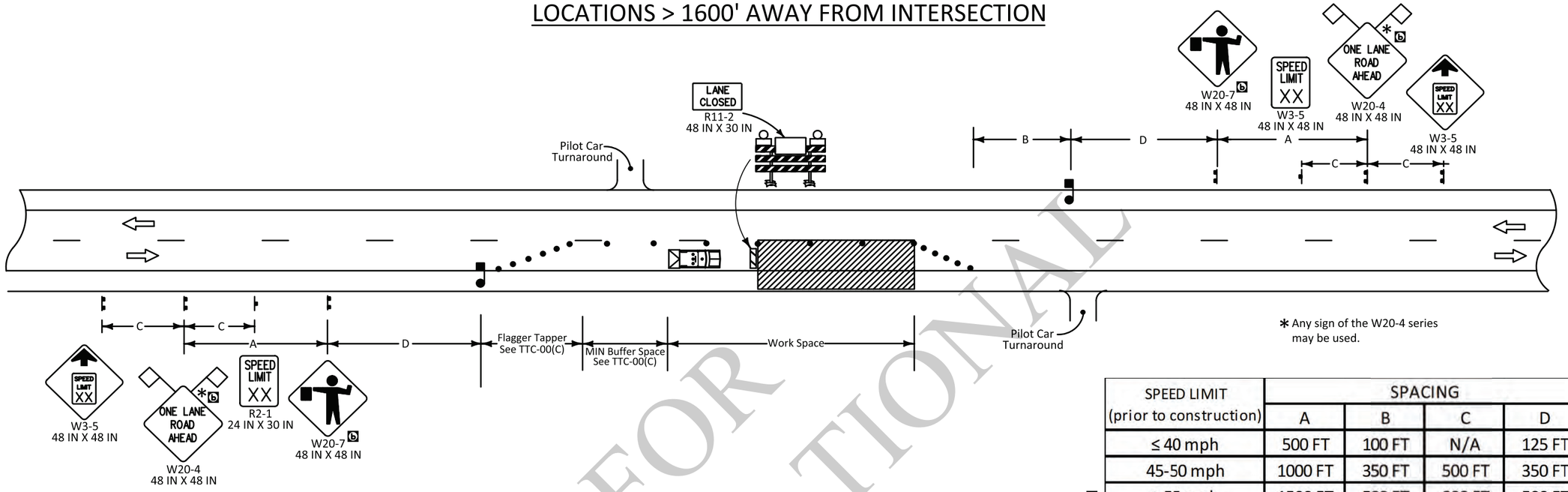

✻ Any sign of the W20-4 series may be used.

SPEED LIMIT (prior to construction)	SPACING			
	A	B	C	D
≤ 40 mph	500 FT	100 FT	N/A	125 FT
45-50 mph	1000 FT	350 FT	500 FT	350 FT
≥ 55 mph [b]	1500 FT	500 FT	800 FT	500 FT

NOTES

This sheet shall be used with the Temporary Traffic Control General Notes Sheets TTC-00(A), TTC-00(B), TTC-00(C), TTC-00(D), and other Temporary Traffic Control Sheets as appropriate.

1) This layout represents the minimum traffic controls required for lane closures on two-lane roads with two-way traffic greater than 1600 feet from an intersection. For this type of closure either a flagger or a pilot car will be required. For advance signing see TTC-00(D).

2) To prevent vehicles from entering the work area against the flow of traffic, an additional flagger shall be stationed at each intersection, major driveway, railroad crossing, or crossing within the work area.

3) For projects in rural areas the distance between flaggers shall not exceed:

A) 2.5 miles for ADT < 2,500.

B) 2.0 miles for 2,500 < ADT < 5,000.

C) 1.5 miles for ADT > 5,000.

4) The flagger station shall be near the beginning of the taper and shall have adequate sight distance to be visible to oncoming traffic. If sight distance cannot be achieved, the distance between flaggers may be extended for a short duration.

5) Visual or radio contact shall be required between flaggers at all times. The flagger shall be visible from the flagger sign.

6) A vehicle with a flashing green/amber light and a truck mounted attenuator shall be used on all roadways with an ADT greater than 20,000 and a pre-construction speed greater than or equal to 40 mph. This vehicle shall move with work operations not to exceed the roll-ahead distance required by the manufacturer plus 100 feet.

7) If a pilot car is required then the contractor is not required to have channelizing devices in the tangent section.

8) If work zone is less than 1600 feet from an intersection see TTC-03.

PILOT CAR

9) If used, a pilot car shall guide a queue of vehicles through the work zone or diversion.

10) It shall be used in restricted visibility operations such as lime or cement stabilization, chip seals, or operations in hilly or curvy terrains, where flaggers cannot see each other (no clear line-of-sight).

11) The operation of the pilot vehicle shall be coordinated with flagging operations or other controls at each end of the one-lane section and all major driveways and street intersections.

12) The pilot car sign should be mounted 7 feet above roadway in a position visible to oncoming and following traffic.

13) The pilot car shall have a green/amber beacon light.

14) The sign mounted on the vehicle shall be two-sided.

PILOT CAR
G20-4
36 IN X 18 IN
FRONT OF SIGN

PILOT CAR FOLLOW ME
G20-4
36 IN X 18 IN
BACK OF SIGN

LEGEND

- Traffic Sign
- Flagger
- Channelizing Devices
- Type III Barricades
- Work Area
- Type B Light
- Direction of Travel
- Truck with Green/Amber Light and TMA

ALL TTC STANDARDS SHOW MINIMUM CONSTRUCTION SIGNING.
ALL SITUATIONS SHALL BE REVIEWED AND/OR DESIGNED BY THE ENGINEER.
CONTRACTORS ARE RESPONSIBLE FOR COMPLYING WITH ALL TTC STANDARDS.

FOR INFORMATIONAL USE

SHEET NUMBER

PARISH | CONTROL SECTION | STATE PROJECT

DESIGN: G. Dunn | CHECK: B. Boucher | DETAIL: G. Dunn | CHECK: B. Boucher | REVIEW | SERIES #

APPROVED BY CHIEF ENGINEER: DATE: 5/21/2026

NO. | DATE | REVISION OR CHANGE ORDER DESCRIPTION | BY
1 | 5-12-26 | General corrections

STATE OF LOUISIANA DEPARTMENT OF TRANSPORTATION AND DEVELOPMENT

TEMPORARY TRAFFIC CONTROL

FLAGGING OPERATIONS LANE CLOSURES GREATER THAN 1600' FROM INTERSECTIONS

TTC-04

DOTD LOUISIANA DEPARTMENT OF TRANSPORTATION & DEVELOPMENT

STANDARD PLAN

SPEED LIMIT (prior to construction)	SPACING				
	A	B	C	D	E
≤ 40 mph	60 FT	60 FT	80 FT	100 FT	N/A
45-50 mph	425 FT	150 FT	425 FT	500 FT	100 FT
≥ 55 mph	1950 FT	200 FT	1950 FT	1000 FT	150 FT

FOR TANGENT DISTANCES ALONG THE DIVERSION GREATER THAN 600 FT

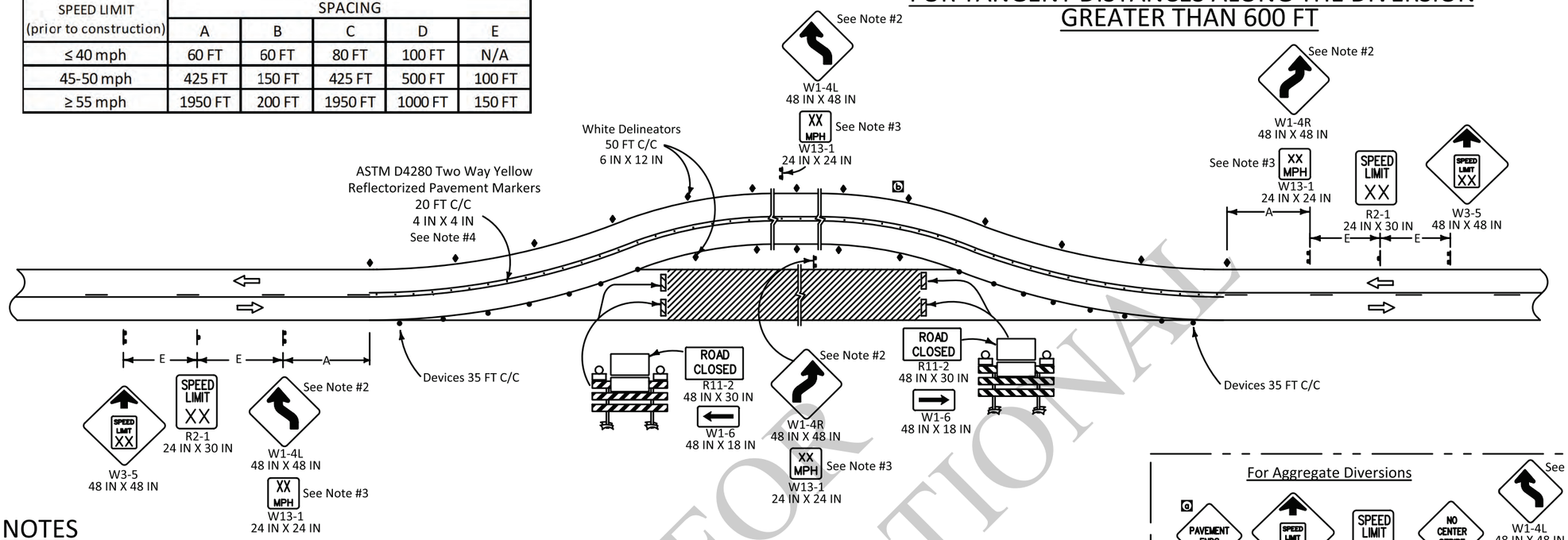

LEGEND

- Traffic Sign
- Channelizing Devices
- Type III Barricades
- Single White Delineators (6IN X 12 IN)
- Reflectorized Pavement Markers
- Type B Light
- Direction of Travel

NOTES

This sheet shall be used with the Temporary Traffic Control General Notes Sheets TTC-00(A), TTC-00(B), TTC-00(C), TTC-00(D), and other Temporary Traffic Control Sheets as appropriate.

1) This layout represents the minimum traffic controls required for a paved or aggregate diversion. For advance signing see TTC-00(D).

2) If advisory speed is less than 35 mph, the "Reverse Curve Signs" (W1-4L or W1-4R) will be changed to "Reverse Turn Sign" (W1-3L or W1-3R).

b 3) "Advisory Speed Plaques" (W13-1) shall be required if the difference between the speed limit prior to construction and the advisory speed (determined by an engineering study performed by the DTOE) is 10 mph or greater.

4) Paved Diversions shall be striped with double yellow solid lines and raised pavement markings as per LADOTD Pavement Marking Standards.

5) Aggregate Diversions shall include "Do Not Pass" (R4-1) signs, o "Pavement Ends" (W8-3) signs, and "No Center Stripe" (W8-12) signs and either supercones or flex posts to delineate the centerline.

o 6) When positive protection is introduced that requires object markers they shall have an orange/black pattern.

For Aggregate Diversions

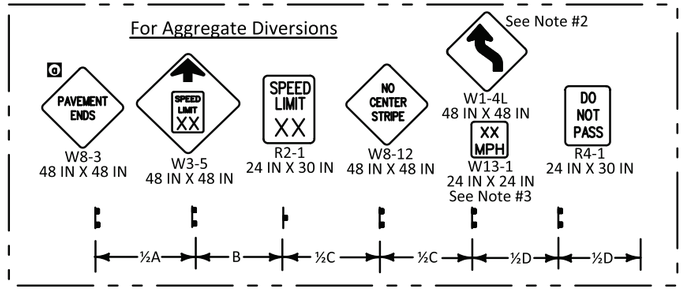

FOR TANGENT DISTANCES ALONG THE DIVERSION LESS THAN OR EQUAL TO 600 FT

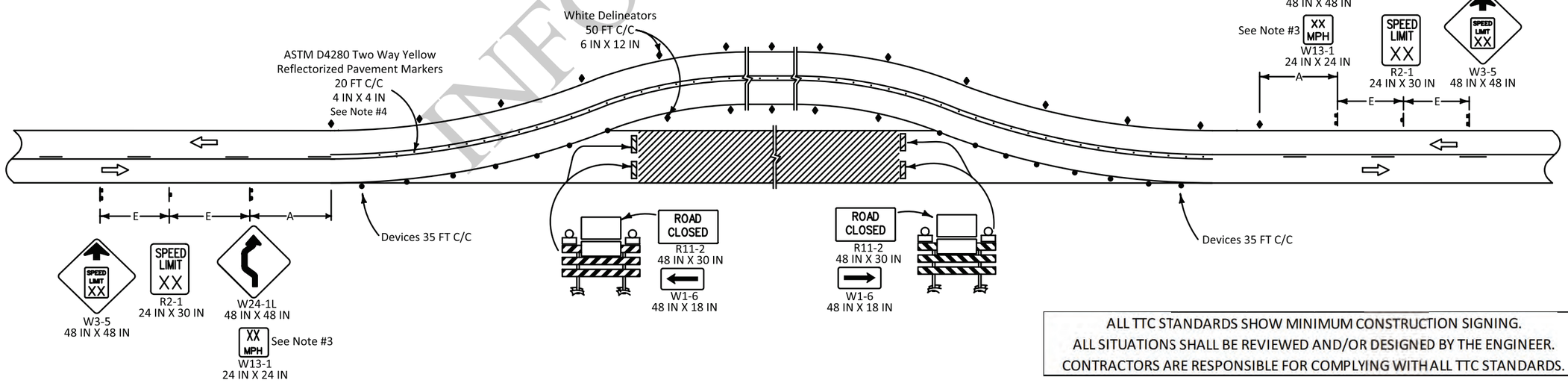

ALL TTC STANDARDS SHOW MINIMUM CONSTRUCTION SIGNING.
ALL SITUATIONS SHALL BE REVIEWED AND/OR DESIGNED BY THE ENGINEER.
CONTRACTORS ARE RESPONSIBLE FOR COMPLYING WITH ALL TTC STANDARDS.

FOR INFORMATIONAL USE

SHEET NUMBER

PARISH | CONTROL SECTION | STATE PROJECT

DESIGN G. Dunn | CHECK B. Boucher | DETAIL G. Dunn | CHECK B. Boucher | REVIEW | SERIES #

APPROVED BY CHIEF ENGINEER: DATE: 5/21/2026

NO.	DATE	REVISION OR CHANGE ORDER DESCRIPTION	BY
2	5-12-26	General corrections and readded note	
1	6-12-25	Sign changed and another sign added	

STATE OF LOUISIANA

TEMPORARY TRAFFIC CONTROL

FOR ON SITE DIVERSION WITH TWO-WAY TRAFFIC

TTC-05

DOTD LOUISIANA DEPARTMENT OF TRANSPORTATION & DEVELOPMENT

STANDARD PLAN

RIGHT LANE CLOSURE

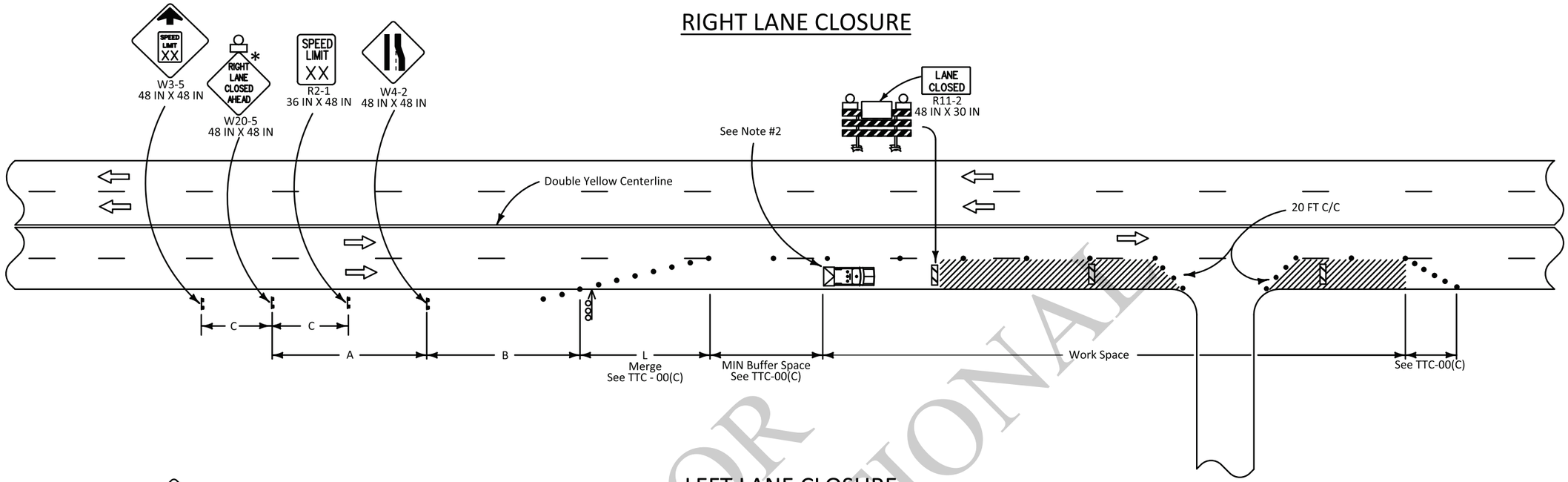

LEFT LANE CLOSURE

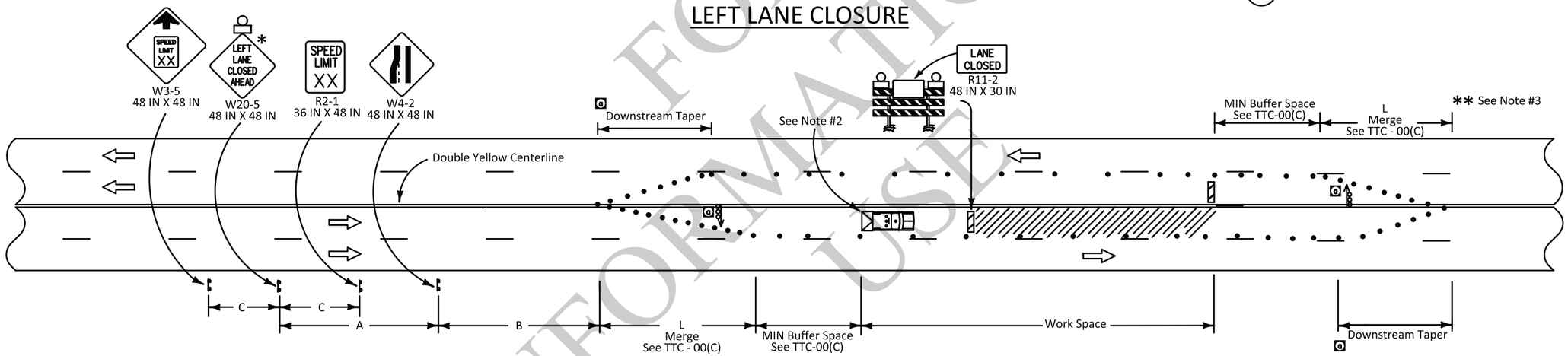

LEGEND

- Traffic Sign
- Channelizing Devices
- Type III Barricades
- Flashing Arrow Board (Type 'C')
- Work Area
- Type B Light
- Direction of Travel
- Truck with Green/Amber Light and TMA

NOTES

This sheet shall be used with the Temporary Traffic Control General Notes Sheets TTC-00(A), TTC-00(B), TTC-00(C), TTC-00(D), and other Temporary Traffic Control Sheets as appropriate.

1) This layout represents the minimum traffic controls required for lane closures on a four-lane undivided highway or a roadway with two-way turn lanes. For roadways with a speed limit of 45 mph or greater prior to construction, add "Left (Right) Lane Closed XX Feet" (W20-5) sign after "Left (Right) Lane Closed Ahead" (W20-5) sign. This is not for roadways with a speed limit of 55 mph or greater prior to construction. For advance signing see TTC-00(D).

2) A vehicle with a flashing green/amber light and a truck mounted attenuator shall be used on all roadways with an ADT greater than 20,000 and a pre-construction speed greater than or equal to 40mph. This vehicle shall move with work operations not to exceed the roll-ahead distance required by the manufacturer plus 100 feet.

3) Advance signing shall match that shown for opposite direction.

4) A flagger shall be used to alert motorists when equipment or workers encroach within 2 feet of an open lane. The flagger shall be posted inside the work zone, adjacent to the open travel lane, and immediately upstream of each operation to facilitate ingress/egress of construction equipment and vehicles. Encroachment shall be held to a minimum.

∗ Any sign of the W20-5 series may be used.

SPEED LIMIT (prior to construction)	SPACING		
	A	B	C
≤ 40 mph	500 FT	250 FT	N/A
45-50 mph	1000 FT	350 FT	500 FT

ALL TTC STANDARDS SHOW MINIMUM CONSTRUCTION SIGNING.
ALL SITUATIONS SHALL BE REVIEWED AND/OR DESIGNED BY THE ENGINEER.
CONTRACTORS ARE RESPONSIBLE FOR COMPLYING WITH ALL TTC STANDARDS.

FOR INFORMATIONAL USE

SHEET NUMBER

PARISH	CONTROL SECTION	STATE PROJECT

DESIGN	G. Dunn
CHECK	B. Boucher
DETAIL	G. Dunn
CHECK	B. Boucher
REVIEW	
SERIES #	

APPROVED BY CHIEF ENGINEER: DATE: 5/21/2024

NO.	DATE	REVISION OR CHANGE ORDER DESCRIPTION	BY
2	5-12-26	General corrections and part of note reedded	
1	6-12-25	Arrow boards moved and text added	

STATE OF LOUISIANA DEPARTMENT OF TRANSPORTATION AND DEVELOPMENT

TEMPORARY TRAFFIC CONTROL
FOR LANE CLOSURE ON FOUR-LANE UNDIVIDED HIGHWAYS
TTC-06

DOTD LOUISIANA DEPARTMENT OF TRANSPORTATION & DEVELOPMENT

STANDARD PLAN

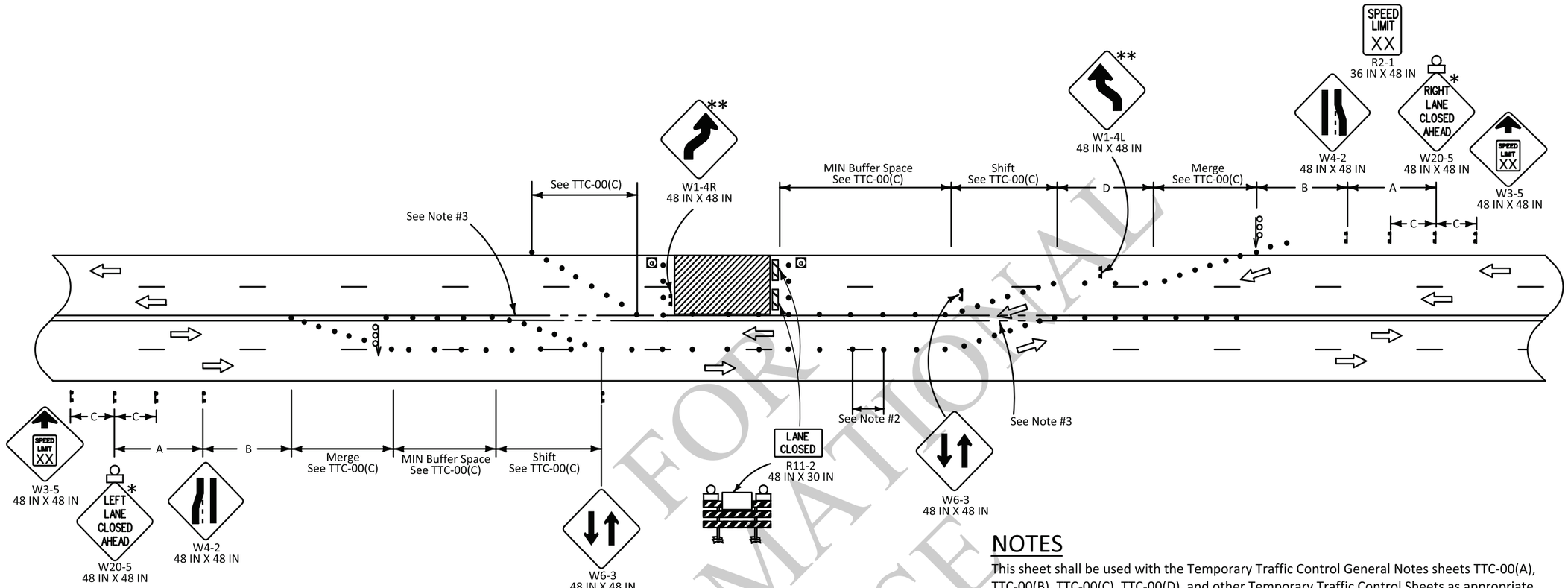

LEGEND

- Traffic Sign
- Channelizing Devices
- Type III Barricades
- Flashing Arrow Board (Type 'C')
- Work Area
- Type B Light
- Direction of Travel

SPEED LIMIT (prior to construction)	SPACING			
	A	B	C	D
25 mph	250 FT	250 FT	N/A	65 FT
30 mph	250 FT	250 FT	N/A	90 FT
35 mph	500 FT	350 FT	N/A	125 FT
40 mph	500 FT	350 FT	N/A	160 FT
45 mph	1000 FT	500 FT	500 FT	270 FT
50 mph	1640 FT	1000 FT	800 FT	300 FT
55 mph	1640 FT	1000 FT	800 FT	330 FT

* Any sign of the W20-5 series may be used.

** In order to give road users advance notice of a lane shift, a "Reverse Curve" (W1-4, W1-4b, or W1-4c) sign should be used when a lane (or lanes) is being shifted to the left or right. If a "Reverse Curve" sign is used and design speed of the curves is 30 mph or less, a "Reverse Turn" (W1-3) sign shall be used.

NOTES

This sheet shall be used with the Temporary Traffic Control General Notes sheets TTC-00(A), TTC-00(B), TTC-00(C), TTC-00(D), and other Temporary Traffic Control Sheets as appropriate.

1) This layout represents the minimum traffic controls required for closure of two adjacent lanes on a four-lane undivided highway. For advance signing see TTC-00(D).

2) During daytime operations, traffic cones may be used to separate traffic lanes. When this layout is authorized to be used during nighttime hours or if the width of the traffic lanes are < 11 feet, the contractor shall be required to use flex posts or super cones to separate head-to-head (two-lane two way traffic) spaced at 20 feet in tangent and 10 feet in taper. On roads with large freight volumes, < 11 ft lanes may not be acceptable.

3) When traffic control is planned to be in place for more than 3 days, conflicting pavement markings shall be removed and temporary markings added.

4) A flagger shall be used to alert motorists when equipment or workers encroach within 2 feet of an open lane. The flagger shall be posted inside the work zone, adjacent to the open travel lane, and immediately upstream of each operation to facilitate ingress/egress of construction equipment and vehicles. Encroachment shall be held to a minimum.

5) For short & intermediate duration closures as defined in the MUTCD, device spacing will be 1/2 normal spacing. This spacing should also be used when devices are used in lieu of pavement markings.

6) Shoulder tapers shall be used in advance of the merge taper when the shoulder width is greater than or equal to 8'.

ALL TTC STANDARDS SHOW MINIMUM CONSTRUCTION SIGNING.
ALL SITUATIONS SHALL BE REVIEWED AND/OR DESIGNED BY THE ENGINEER.
CONTRACTORS ARE RESPONSIBLE FOR COMPLYING WITH ALL TTC STANDARDS.

FOR INFORMATIONAL USE ONLY

SHEET NUMBER

PARISH | CONTROL SECTION | STATE PROJECT

DESIGN G. Dunn | CHECK B. Boucher | DETAIL G. Dunn | CHECK B. Boucher | REVIEW | SERIES #

APPROVED BY CHIEF ENGINEER: DATE: 5/21/2024

NO.	DATE	REVISION OR CHANGE ORDER DESCRIPTION	BY
1	6-12-25	Text and cones added	

TEMPORARY TRAFFIC CONTROL
FOR CLOSURE OF TWO ADJACENT LANES ON FOUR-LANE UNDIVIDED HIGHWAYS
TTC-07

DOTD LOUISIANA DEPARTMENT OF TRANSPORTATION & DEVELOPMENT

STANDARD PLAN

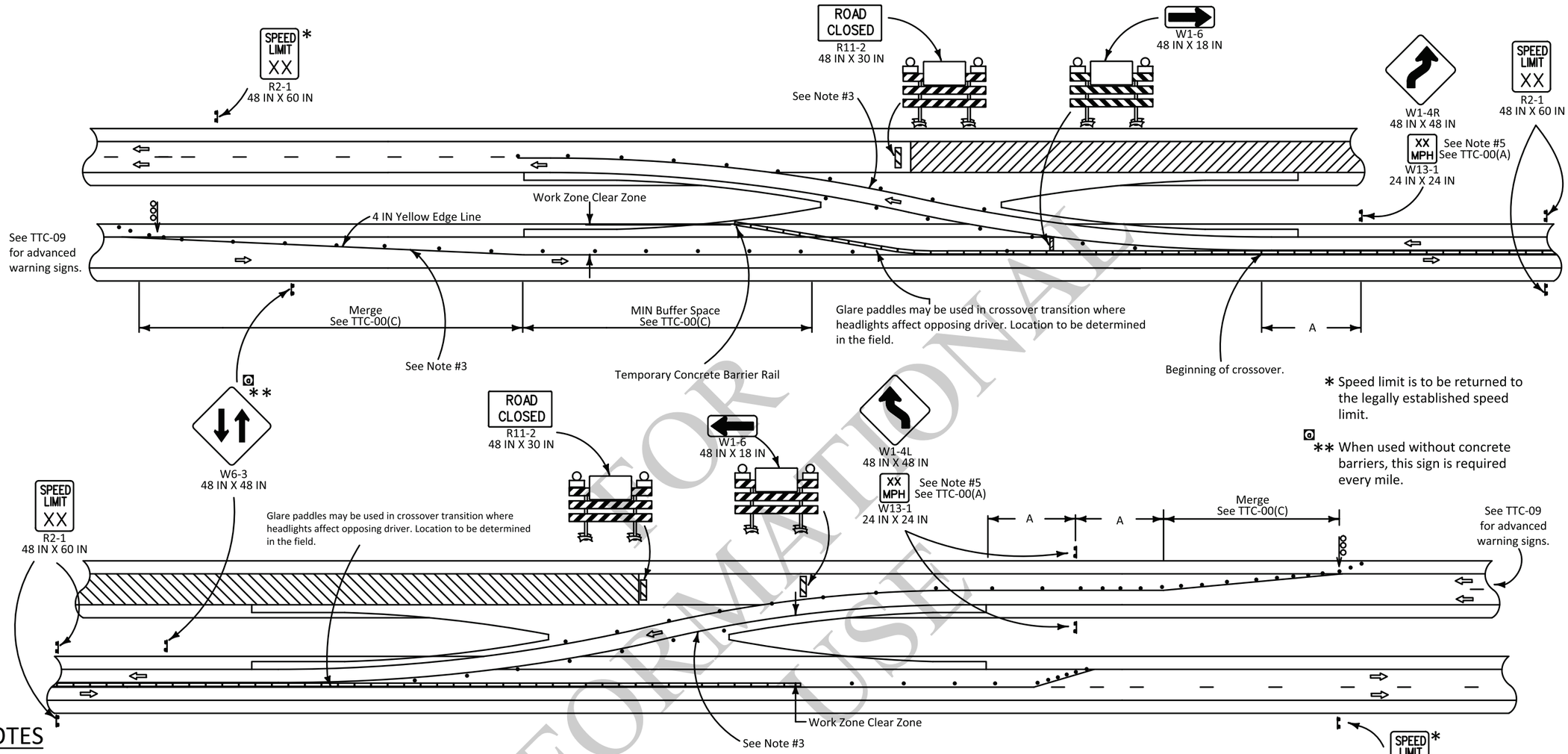

* Speed limit is to be returned to the legally established speed limit.

** When used without concrete barriers, this sign is required every mile.

NOTES

This sheet shall be used with Temporary Traffic Control General Notes Sheets TTC-00(A), TTC-00(B), TTC-00(C), TTC-00(D), and other Temporary Traffic Control Sheets as appropriate.

1) This layout represents the minimum traffic controls required for median crossovers on divided highways. For advance signing see TTC-00(D) and TTC-09.

2) For posted speed limits prior to construction that are greater than 45 mph, concrete barriers shall be required to separate the lanes of travel. For posted speed limits prior to construction that are 45 mph or less, concrete barriers may be substituted by tubular markers or flexposts.

3) Temporary raised pavement markers spaced at 15 FT C/C shall be used to supplement the white and yellow temporary edge lines through the reverse curves of the crossover. All temporary edge lines between the barrier rail and the beginning of the lane reduction taper shall have temporary raised pavement markers spaced at 15 FT C/C.

4) When traffic control is planned to be in place for more than 3 days, conflicting pavement markings shall be removed and temporary markings added.

5) "Advisory Speed Plaques" (W13-1) shall be required if the difference between the speed limit prior to construction and the advisory speed (determined by an engineering study performed by the DTOE) is 10 mph or greater.

SPEED LIMIT (prior to construction)	Spacing A
25 mph	63 FT
30 mph	90 FT
35 mph	123 FT
40 mph	160 FT
45 mph	270 FT
50 mph	300 FT
55 mph	330 FT

ALL TTC STANDARDS SHOW MINIMUM CONSTRUCTION SIGNING.
ALL SITUATIONS SHALL BE REVIEWED AND/OR DESIGNED BY THE ENGINEER.
CONTRACTORS ARE RESPONSIBLE FOR COMPLYING WITH ALL TTC STANDARDS.

LEGEND

- Traffic Sign
- Channelizing Devices
- Type III Barricades
- Flashing Arrow Board (Type 'C')
- Work Area
- Temporary Concrete Barrier
- Type B Light
- Direction of Travel

FOR INFORMATIONAL USE

SHEET NUMBER

PARISH | CONTROL SECTION | STATE PROJECT

DESIGN: G. Dunn | CHECK: B. Boucher | DETAIL: G. Dunn | CHECK: B. Boucher | REVIEW | SERIES #

APPROVED BY CHIEF ENGINEER: DATE: 5/21/2026

NO.	DATE	REVISION OR CHANGE ORDER DESCRIPTION	BY
1	6-12-25	Text added	

STATE OF LOUISIANA DEPARTMENT OF TRANSPORTATION AND DEVELOPMENT

TEMPORARY TRAFFIC CONTROL
FOR MEDIAN CROSSOVER ON DIVIDED HIGHWAYS

TTC-08

DOTD
LOUISIANA DEPARTMENT OF TRANSPORTATION & DEVELOPMENT

STANDARD PLAN

RIGHT LANE CLOSURE

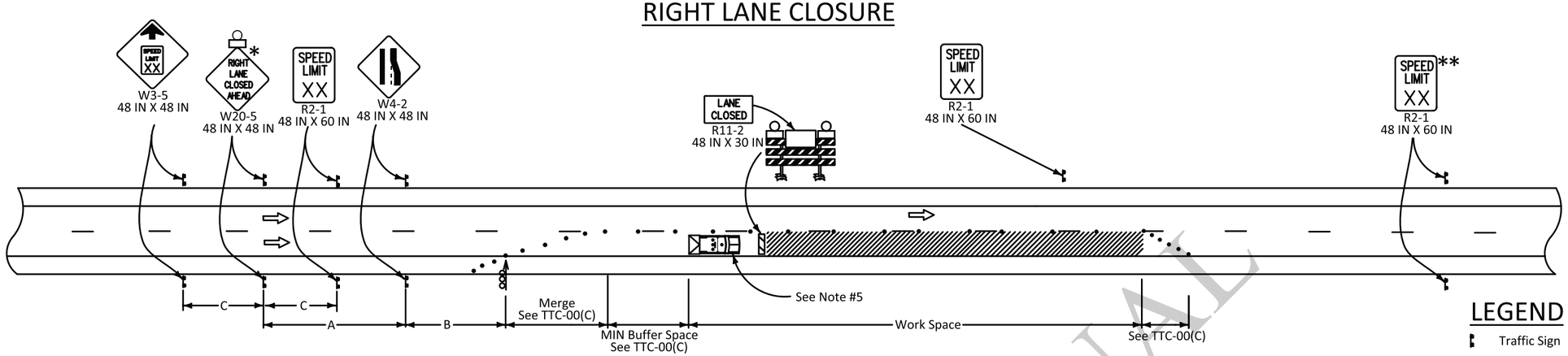

[b]

SPEED LIMIT (prior to construction)	SPACING		
	A	B	C
45 mph	1000 FT	500 FT	500 FT
50 mph	1000 FT	500 FT	500 FT
≥ 55 mph	1640 FT	1000 FT	800 FT

* Any sign of the W20-5 series may be used.

** Speed limit is to be returned to legally established speed limit.

LEGEND

- Traffic Sign
- Channelizing Devices
- Type III Barricades
- Flashing Arrow Board (Type 'C')
- Work Area
- Type B Light
- Direction of Travel
- Truck with Green/Amber Light and TMA

LEFT LANE CLOSURE

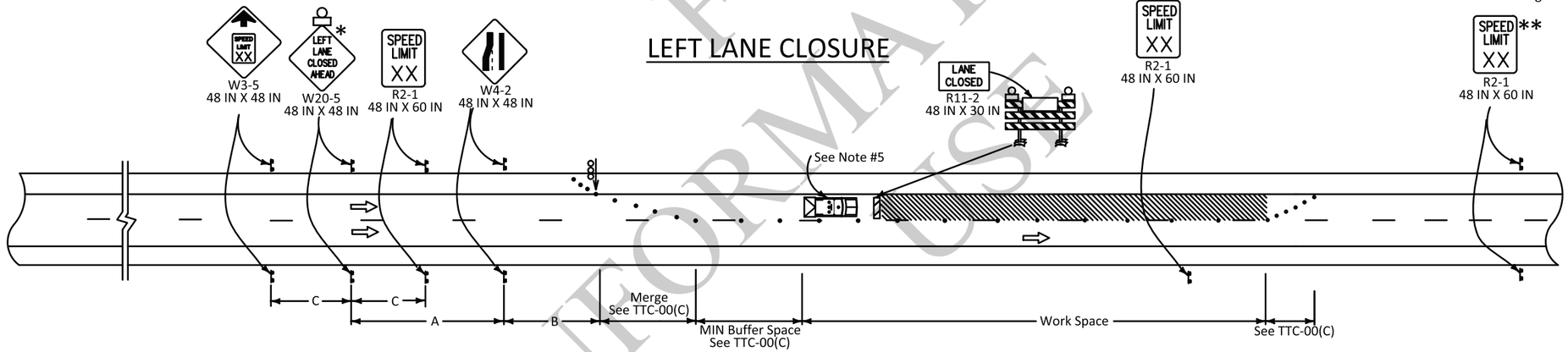

NOTES

This sheet shall be used with the Temporary Traffic Control General Notes Sheets TTC-00(A), TTC-00(B), TTC-00(C), TTC-00(D), and other Temporary Traffic Control Sheets as appropriate.

1) This layout represents the minimum traffic controls required for lane closures on divided highways with speed limits greater than 40 mph. This layout does not cover roadwork where a ramp entrance or an exit taper falls within the work area. For advance signing see TTC-00(D).

2) This layout does not illustrate roadwork near a signal or a major intersection.

3) Sign spacing may be adjusted due to access conditions of the corridor.

4) If speed limit is less than 45 mph, see TTC-10.

5) A vehicle with a flash green/amber light and a truck mounted attenuator shall be used on all interstate projects or on all roadways with an ADT greater than 20,000 and a pre-construction speed greater than or equal to 40 mph. This vehicle shall move with work operations not to exceed the roll-ahead distance required by the manufacture plus 100 ft.

6) A flagger shall be used to alert motorists when equipment or workers encroach within 2 feet of an open lane. The flagger shall be posted inside the work zone, adjacent to the open travel lane, and immediately upstream of each operation to facilitate ingress/egress of construction equipment and vehicles. Encroachment shall be held to a minimum.

7) A "Road Work Ahead" (W20-1) sign shall be placed within 1000 ft ahead of the entrance ramp nose for any ramp within the area of traffic control signing.

ALL TTC STANDARDS SHOW MINIMUM CONSTRUCTION SIGNING.
ALL SITUATIONS SHALL BE REVIEWED AND/OR DESIGNED BY THE ENGINEER.
CONTRACTORS ARE RESPONSIBLE FOR COMPLYING WITH ALL TTC STANDARDS.

FOR INFORMATIONAL USE

SHEET NUMBER

PARISH	CONTROL SECTION	STATE PROJECT
DESIGN G. Dunn / CHECK B. Boucher	DETAIL G. Dunn / CHECK B. Boucher	REVIEW / SERIES #

APPROVED BY CHIEF ENGINEER: DATE: 5/21/2026

NO.	DATE	REVISION OR CHANGE ORDER DESCRIPTION	BY
[b]	5-12-26	General corrections	

STATE OF LOUISIANA

TEMPORARY TRAFFIC CONTROL
FOR LANE CLOSURES ON DIVIDED HIGHWAYS
(DOES NOT INCLUDE RAMP ENTRANCE OR EXIT TAPERS)

TTC-09

DOTD LOUISIANA DEPARTMENT OF TRANSPORTATION & DEVELOPMENT

STANDARD PLAN

NORMAL LANE CLOSURE

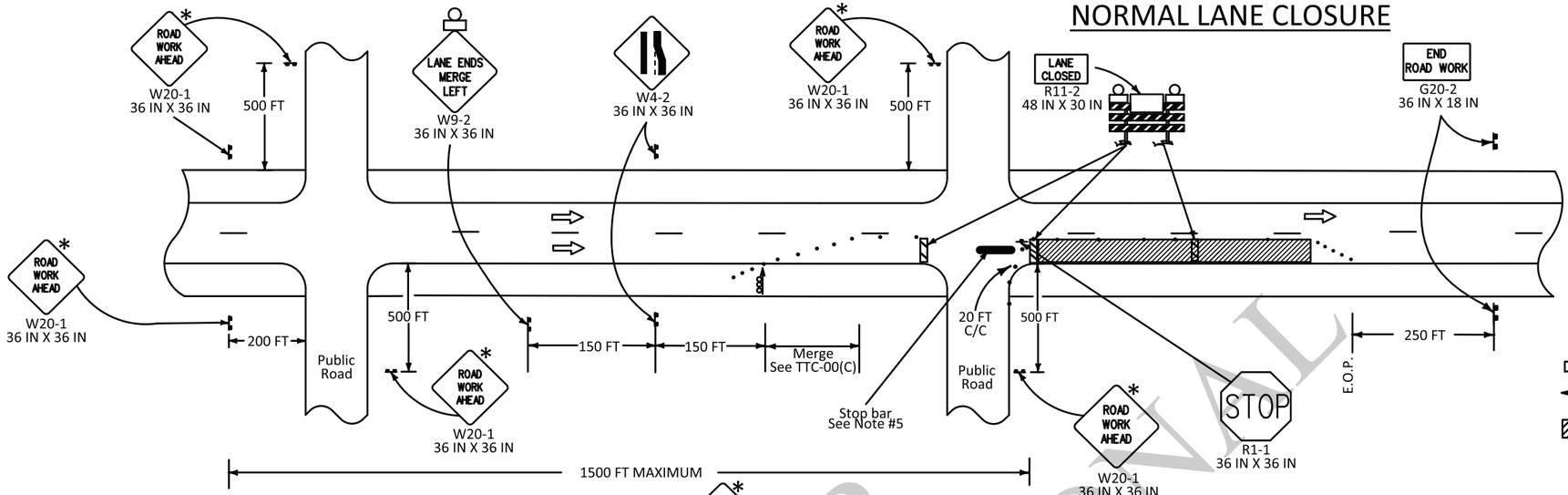

LEGEND

- Traffic Sign
- Channelizing Devices
- Type III Barricades
- Flashing Arrow Board (Type 'C')
- Work Area
- Type B Light
- Direction of Travel
- Audible Message Device

LANE CLOSURE WITH HIGH VOLUME RIGHT TURNS AND / OR SIDEWALK CLOSURE

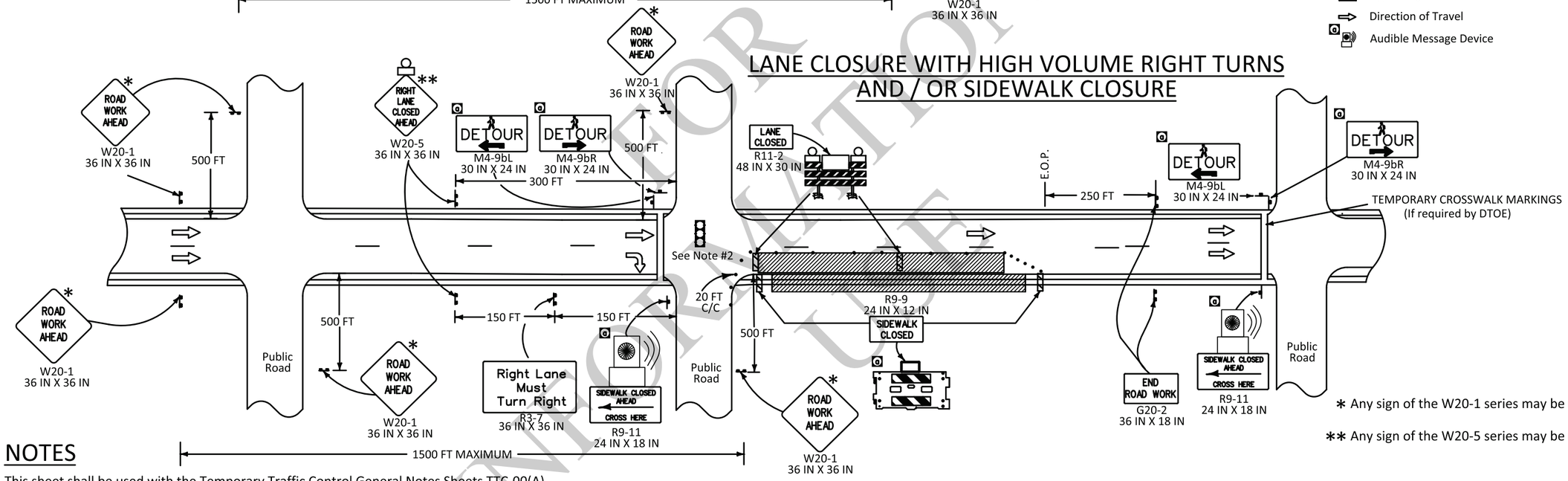

∗ Any sign of the W20-1 series may be used.

∗∗ Any sign of the W20-5 series may be used.

NOTES

This sheet shall be used with the Temporary Traffic Control General Notes Sheets TTC-00(A), TTC-00(B), TTC-00(C), TTC-00(D), TTC-00(E), and other Temporary Traffic Control Sheets as appropriate.

1) This layout represents the minimum traffic controls require for lane closures in areas with a grid layout and with speed limits of 40 mph and below. This layout illustrates roadwork near a signal or a major intersection with or without sidewalks.

2) If a signal is involved in the construction zone, a specific temporary traffic signal timing and phasing plan for each phase of construction shall be developed.

3) Bicyclists and pedestrians, including those with disabilities, should be provided with access and reasonably safe passage through the TTC zone.

4) The sign height shall be at least 7 feet in business, commercial, and residential areas and also near parking, pedestrians, bicyclists, or other obstructions.

5) Place stop bars if work duration is greater than 3 days.

6) Place "Road Work Ahead" (W20-1) sign prior to an intersecting alternate route, no more than 1500 feet from the work area.

7) When crosswalks or other pedestrian facilities are closed or relocated, temporary facilities shall be detectable and shall include accessibility features consistent with the features in the existing pedestrian facility as defined in the MUTCD.

8) A curb ramp shall be used for pedestrian access when curb is 9 inches or taller.

ALL TTC STANDARDS SHOW MINIMUM CONSTRUCTION SIGNING.
ALL SITUATIONS SHALL BE REVIEWED AND/OR DESIGNED BY THE ENGINEER.
CONTRACTORS ARE RESPONSIBLE FOR COMPLYING WITH ALL TTC STANDARDS.

9) Audible devices are required for sidewalk closures between existing crossings. Additional audible devices may be needed on "Pedestrian Detour" (M4-9b) signs based on engineering judgment.

10) Audible devices are required when existing crossings are removed.

FOR INFORMATIONAL PURPOSES ONLY

SHEET NUMBER

PARISH	CONTROL SECTION	STATE PROJECT

DESIGN	G. Dunn	DETAIL	G. Dunn	REVIEW	SERIES ∗
CHECK	B. Boucher	CHECK	B. Boucher		

APPROVED BY CHIEF ENGINEER: DATE: 5/21/2026

NO.	DATE	REVISION OR CHANGE ORDER DESCRIPTION	BY
	6-12-25	Barricade changed	

STATE OF LOUISIANA

TEMPORARY TRAFFIC CONTROL

FOR LANE AND SIDEWALK CLOSURES IN URBAN AREAS WITH SPEED LIMIT LESS THAN OR EQUAL TO 40 MPH

TTC-10

DOTD
LOUISIANA DEPARTMENT OF TRANSPORTATION & DEVELOPMENT

STANDARD PLAN

NOTES

This sheet shall be used with the Temporary Traffic Control General Notes Sheets TTC-00(A), TTC-00(B), TTC-00(C), TTC-00(D), and other Temporary Traffic Control Sheets as appropriate.

1) This layout represents the minimum traffic controls required for lane closures and lane shift using temporary barrier rail on divided highways. This includes freeways. For advance signing see TTC-00(D).

2) If a ramp entrance or exit taper falls within the work area, refer to standard road plan TTC-12 for traffic control details.

3) When traffic control is planned to be in place for more than three days, conflicting pavement markings shall be removed and temporary markings added. Existing broken line pavement marking shall be removed from the "Lane Ends" (W4-2) sign through the work area.

4) For work lasting more than three days, a temporary edge line shall be installed from the start of the merging taper to the far end of the downstream taper.

5) If the lane shift occurs on new pavement or existing shoulder, then "Revese Curve" (W1-4R or W1-4L) sign is required.

6) If a shoulder which is not at full pavement depth is used as a temporary travel lane, advanced signs should direct trucks to use the existing roadway, not the shoulder.

7) When traffic is diverted onto shoulder, additional shoulder work and/or soil stabilizers may be required. Shoulder and embankment stability should be evaluated beforehand.

8) Extra paved surface may be needed to maintain crashworthiness of concrete barriers. These drawings only intend to show a few scenarios/options for handling concrete barriers/attenuators that could be used.

9) When the workzone is less than 600', the "Double Reverse Curve" (W24-1) sign should be used.

SPEED LIMIT (prior to construction)	SPACING			
	A	B	C	D
45 mph	1000 FT	500 FT	500 FT	300 FT
50 mph	1000 FT	500 FT	500 FT	300 FT
≥ 50 mph	1640 FT	1000 FT	800 FT	450 FT

LEGEND

- Traffic Sign
- Channelizing Devices
- Flashing Arrow Board (Type 'C')
- Work Area
- Type B Light
- Concrete Barrier
- Direction of Travel
- Attenuator

LANE SHIFT TOWARD SHOULDER

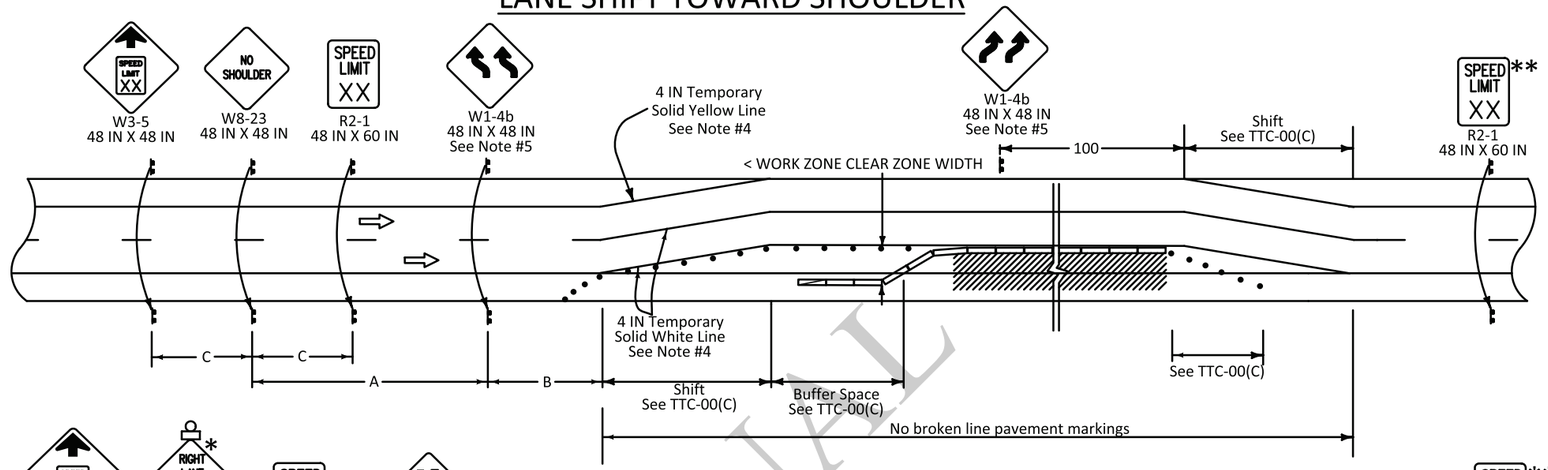

LANE CLOSURE

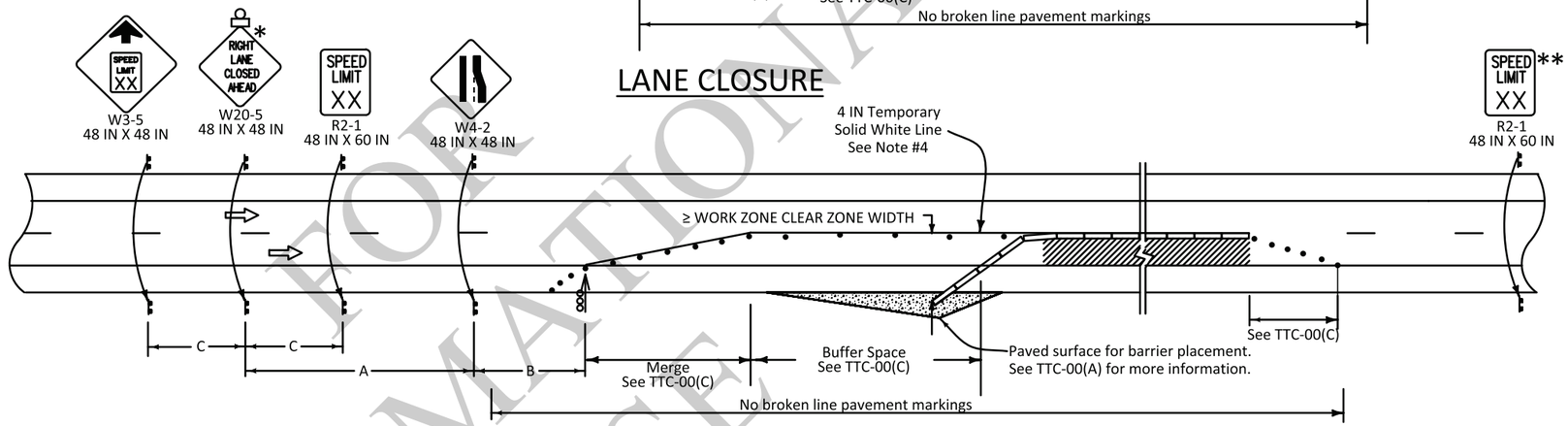

LANE CLOSURE AND SHIFT TOWARD SHOULDER

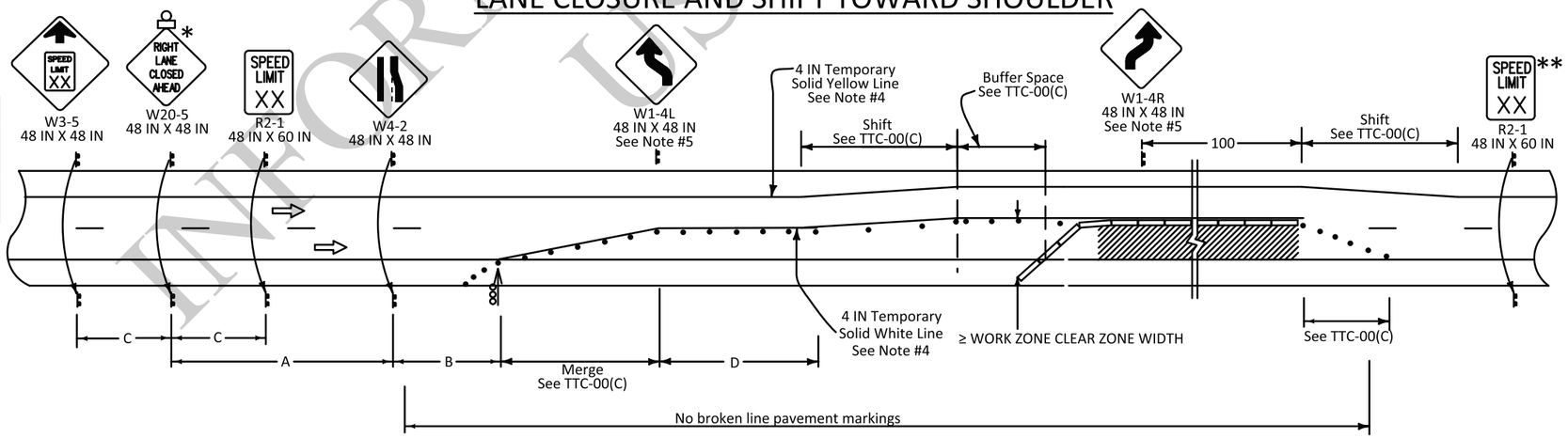

∗ Any sign of the W20-5 series may be used.

∗∗ Speed limit is to be returned to legally established speed limit.

ALL TTC STANDARDS SHOW MINIMUM CONSTRUCTION SIGNING.
ALL SITUATIONS SHALL BE REVIEWED AND/OR DESIGNED BY THE ENGINEER.
CONTRACTORS ARE RESPONSIBLE FOR COMPLYING WITH ALL TTC STANDARDS.

FOR INFORMATIONAL USE

SHEET NUMBER

PARISH	CONTROL SECTION	STATE PROJECT
DESIGN G. Dunn	DETAIL G. Dunn	REVIEW
CHECK B. Boucher	CHECK B. Boucher	SERIES #

APPROVED BY CHIEF ENGINEER: DATE: 5/21/2026

NO.	DATE	REVISION OR CHANGE ORDER DESCRIPTION	BY
	6-12-25	Text added	

STATE OF LOUISIANA DEPARTMENT OF TRANSPORTATION AND DEVELOPMENT

TEMPORARY TRAFFIC CONTROL

FOR LANE CLOSURE USING TEMPORARY BARRIER RAIL ON DIVIDED HIGHWAYS (INCLUDES FREEWAYS)

TTC-11

DOTD LOUISIANA DEPARTMENT OF TRANSPORTATION & DEVELOPMENT

STANDARD PLAN

FREEWAY ENTRANCE WITH RIGHT LANE CLOSED

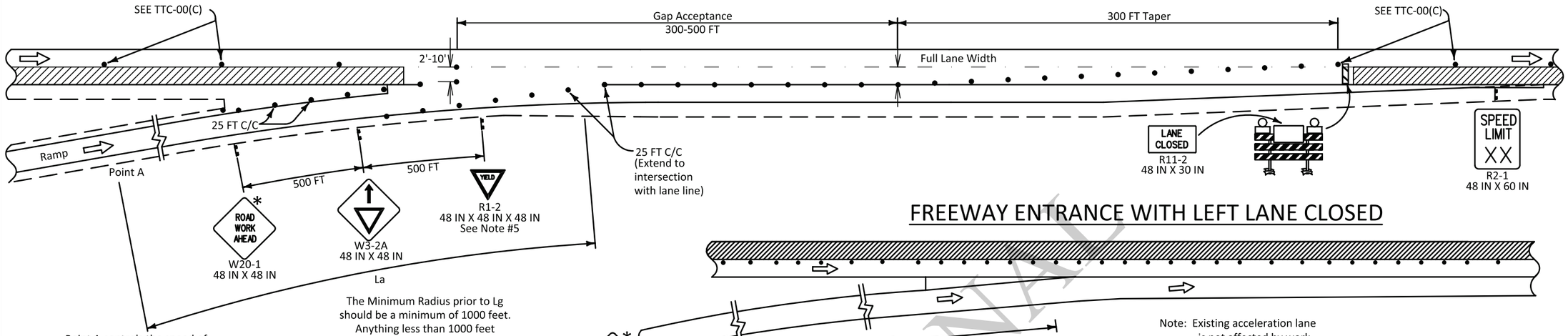

Point A controls the speed of the ramp, which is the PC or PCC of the curve. Assume that 45 mph is achieved at this point on diagonal ramps and 20 mph is achieved for loop ramps.

The Minimum Radius prior to Lg should be a minimum of 1000 feet. Anything less than 1000 feet shall be approved by the Engineer.

FREEWAY ENTRANCE WITH LEFT LANE CLOSED

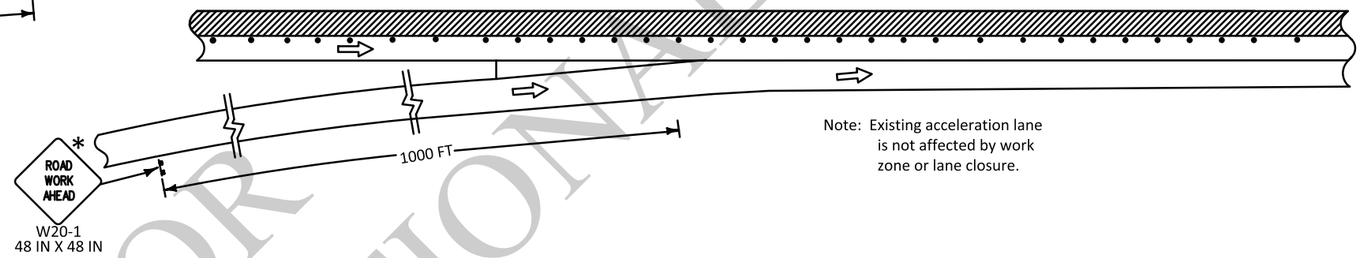

Note: Existing acceleration lane is not affected by work zone or lane closure.

FREEWAY EXIT WITH RIGHT LANE CLOSED

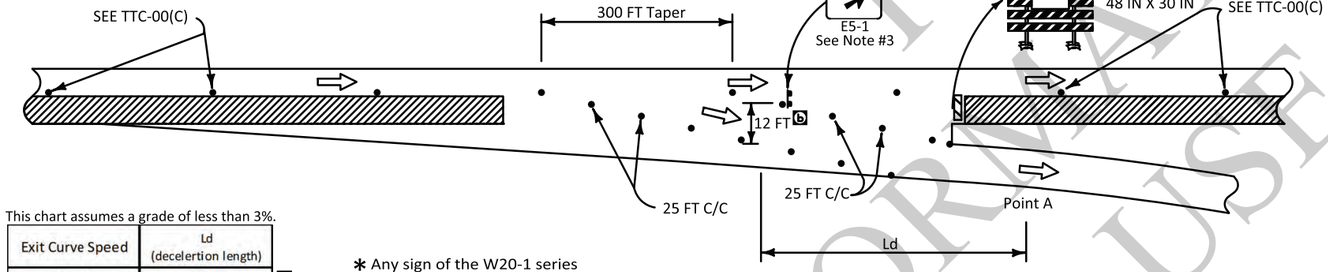

This chart assumes a grade of less than 3%.

Exit Curve Speed	Ld (decelertion length)
20 mph	480 FT
45 mph	300 FT

a

For more information, see Chapter 10 of the AASHTO Green Book.

* Any sign of the W20-1 series may be used.

** The temporary green and white "Exit" (E5-1) sign shall be 48 IN X 48 IN.

These charts assume a grade of less than 3%.

Diagonal Ramps	SPEED LIMIT (prior to construction)	La (acceleration length)
	70 mph	820 FT
	65 mph	600 FT
	60 mph	600 FT

Loop Ramps	SPEED LIMIT (prior to construction)	La (acceleration length)
	70 mph	1520 FT
	65 mph	1310 FT
	60 mph	1100 FT

For more information, see Chapter 10 of the AASHTO Green Book.

FREEWAY EXIT WITH LEFT LANE CLOSED

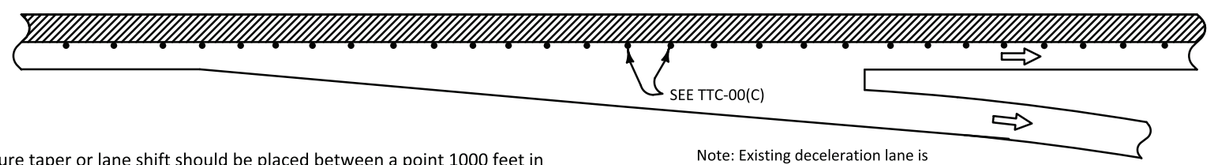

Note: Existing deceleration lane is not affected by work zone or lane closure.

NOTES

This sheet shall be used with the Temporary Traffic Control General Notes Sheets TTC-00(A), TTC-00(B), TTC-00(C), TTC-00(D), and other Temporary Traffic Control Sheets as appropriate.

1) This layout represents the minimum traffic controls required for a temporary work area with lane closures through ramp entrances and exit tapers on a freeway. For advance signing see TTC-00(D).

2) For mainline lane closures see TTC-09, TTC-10, or TTC-11.

3) The mounting height of the temporary "Exit" (E5-1) sign shall be a minimum of 7 feet from the pavement surface to the bottom of the sign. The existing green and white "Exit" sign shall be covered.

4) If acceleration distance (La) and/or gap acceptance (Lg) of 300 feet cannot be achieved, the ramp shall be closed.

5) No lane closure taper or lane shift should be placed between a point 1000 feet in advance of an exit taper and a point 100 feet past the striped gore point of an exit ramp. The Engineer can reduce the 1000 feet distance requirement if field conditions justify the reduction.

6) No lane closure taper or lane shift should be placed between a point 100 feet in advance of the striped gore point of an on ramp and a point that is a distance of 2L from the end of the acceleration lane taper. See TTC-00(C) for taper lengths.

ALL TTC STANDARDS SHOW MINIMUM CONSTRUCTION SIGNING.
ALL SITUATIONS SHALL BE REVIEWED AND/OR DESIGNED BY THE ENGINEER.
CONTRACTORS ARE RESPONSIBLE FOR COMPLYING WITH ALL TTC STANDARDS.

LEGEND

- Traffic Sign
- Channelizing Devices
- Type III Barricades
- Work Area
- Type B Light
- Direction of Travel

FOR INFORMATIONAL USE

SHEET NUMBER

PARISH	CONTROL SECTION	STATE PROJECT

DESIGN	G. Dunn	DETAIL	G. Dunn	REVIEW	SERIES #
CHECK	B. Boucher	CHECK	B. Boucher		

APPROVED BY CHIEF ENGINEER: DATE: 5/21/2026

NO.	DATE	REVISION OR CHANGE ORDER DESCRIPTION	BY
a	5-12-26	General corrections	
b	6-12-25	Number updated	

TEMPORARY TRAFFIC CONTROL
FOR LANE CLOSURES THROUGH RAMP ENTRANCE AND EXIT TAPERS

TTC-12

DOTD LOUISIANA DEPARTMENT OF TRANSPORTATION & DEVELOPMENT

STANDARD PLAN

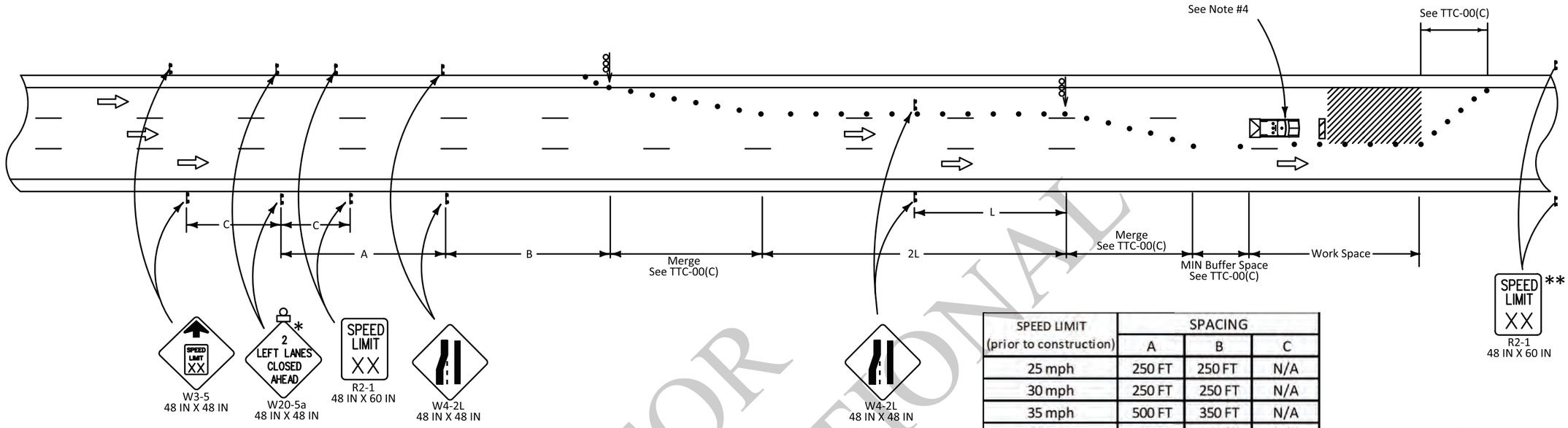

SPEED LIMIT (prior to construction)	SPACING		
	A	B	C
25 mph	250 FT	250 FT	N/A
30 mph	250 FT	250 FT	N/A
35 mph	500 FT	350 FT	N/A
40 mph	500 FT	350 FT	N/A
45 mph	1000 FT	500 FT	500 FT
50 mph	1000 FT	500 FT	500 FT
≥ 55 mph	1640 FT	1000 FT	800 FT

* Any sign of the W20-5a series may be used.

** Speed limit is to be returned to legally established speed limit.

LEGEND

- Traffic Sign
- Channelizing Devices
- Type III Barricades
- Flashing Arrow Board (Type 'C')
- Work Area
- Type B Light
- Truck with Green/Amber Light and TMA

NOTES

This sheet shall be used with the Temporary Traffic Control General Notes Sheets TTC-00(A), TTC-00(B), TTC-00(C), TTC-00(D), and other Temporary Traffic Control Sheets as appropriate.

1) This layout represents the minimum traffic controls required for two lanes closed on a divided 6 lane or more highway. This road work does not cover road work where a ramp entrance or exit taper falls within the work area. For advance signing see TTC-00(D).

2) This layout does not illustrate road work near a signal or a major intersection.

3) A "Road Work Ahead" (W20-1) sign shall be placed 1000 feet ahead of the entrance ramp nose for any ramp within the area of traffic control signing.

4) A vehicle with a flashing green/amber light and a truck mounted attenuator shall be used on all interstate projects or on all roadways with an ADT greater than 20,000 and a pre-construction speed greater than or equal to 40 mph. This vehicle shall move with work operations not to exceed the roll-ahead distance required by the manufacturer plus 100 feet.

ALL TTC STANDARDS SHOW MINIMUM CONSTRUCTION SIGNING.
ALL SITUATIONS SHALL BE REVIEWED AND/OR DESIGNED BY THE ENGINEER.
CONTRACTORS ARE RESPONSIBLE FOR COMPLYING WITH ALL TTC STANDARDS.

FOR INFORMATIONAL USE

SHEET NUMBER

PARISH | CONTROL SECTION | STATE PROJECT

DESIGN G. Dunn | CHECK B. Boucher | DETAIL G. Dunn | CHECK B. Boucher | REVIEW | SERIES *

APPROVED BY CHIEF ENGINEER: DATE: 5/21/2024

REVISION OR CHANGE ORDER DESCRIPTION | BY | DATE | NO.
Text added | 6-12-25

TEMPORARY TRAFFIC CONTROL
FOR CLOSURE OF TWO LANES ON A MULTI-LANE HIGHWAY
TTC-13

DOTD LOUISIANA DEPARTMENT OF TRANSPORTATION & DEVELOPMENT

STANDARD PLAN

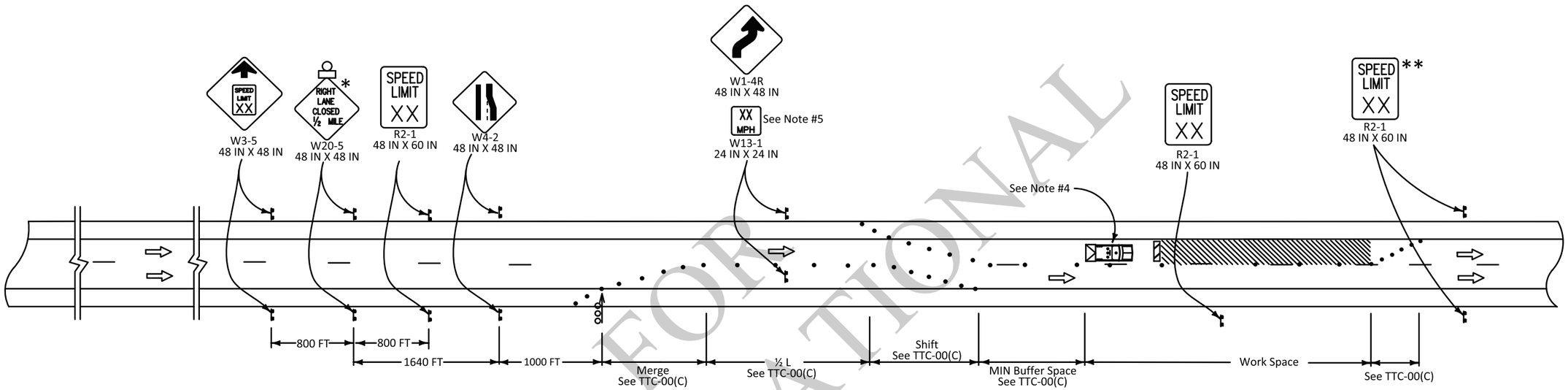

NOTES

This sheet shall be used with the Temporary Traffic Control General Notes Sheets TTC-00(A), TTC-00(B), TTC-00(C), TTC-00(D), and other Temporary Traffic Control Sheets as appropriate.

1) This layout represents the minimum traffic controls required for work in the left lane that would require the left lane to be closed on rural multi-lane divided highways and all interstates where left exit and entrance ramps do not exist. For advance signing see TTC-00(D).

2) This layout does not illustrate road work where a ramp entrance or an exit taper falls within the work area.

3) This layout does not illustrate road work near a signal or a major intersection.

4) A vehicle with a flashing green/amber light and a truck mounted attenuator shall be used on all interstate projects or on all roadways with an ADT greater than 20,000 and a pre-construction speed greater than or equal to 40 mph. This vehicle shall move with work operations not to exceed the roll-ahead distance required by the manufacturer plus 100 feet.

5) "Advisory Speed" (W13-1) plaques shall be required if the difference between the speed limit prior to construction and the advisory speed (determined by an engineering study performed by the DTOE) is 10 mph or greater.

* Any sign of the W20-5 series may be used.

** Speed limit is to be returned to legally established speed limit.

LEGEND

- Traffic Sign
- Channelizing Devices
- Type III Barricades
- Flashing Arrow Board (Type'C')
- Work Area
- Type B Light
- Direction of Travel
- Truck with Green/Amber Light and TMA

ALL TTC STANDARDS SHOW MINIMUM CONSTRUCTION SIGNING.
ALL SITUATIONS SHALL BE REVIEWED AND/OR DESIGNED BY THE ENGINEER.
CONTRACTORS ARE RESPONSIBLE FOR COMPLYING WITH ALL TTC STANDARDS.

FOR INFORMATIONAL USE

SHEET NUMBER

PARISH | CONTROL SECTION | STATE PROJECT

DESIGN: G. Dunn | CHECK: B. Boucher | DETAIL: G. Dunn | CHECK: B. Boucher | REVIEW | SERIES *

APPROVED BY CHIEF ENGINEER: DATE: 5/21/2026

NO. | DATE | REVISION OR CHANGE ORDER DESCRIPTION | BY

STATE OF LOUISIANA DEPARTMENT OF TRANSPORTATION AND DEVELOPMENT

TEMPORARY TRAFFIC CONTROL

FOR LOUISIANA LEFT ON INTERSTATE HIGHWAYS

TTC-14

DOTD LOUISIANA DEPARTMENT OF TRANSPORTATION & DEVELOPMENT

STANDARD PLAN

CLOSURE WHEN NO ALTERNATE ROUTE IS AVAILABLE

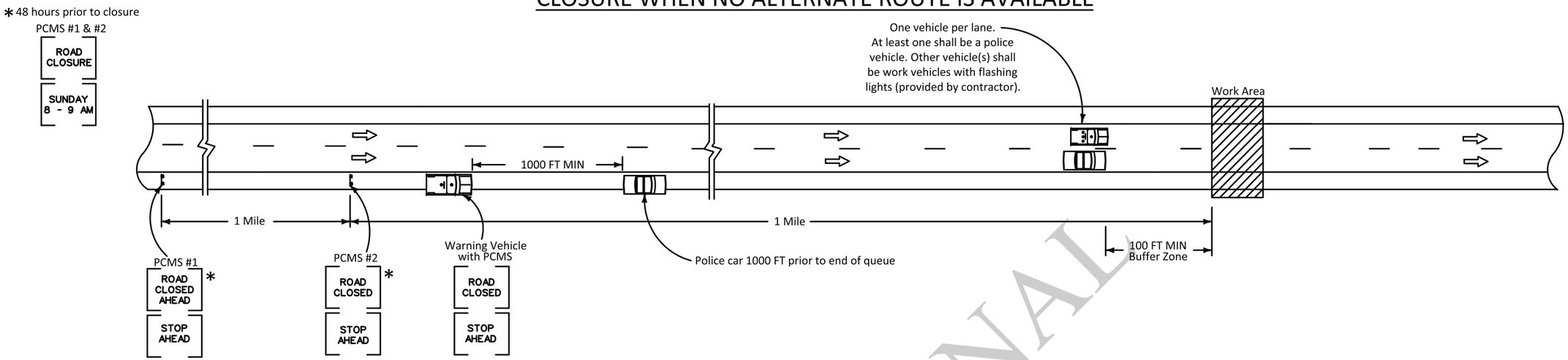

CLOSURE WHEN ALTERNATE ROUTE IS AVAILABLE FROM NEAREST EXIT

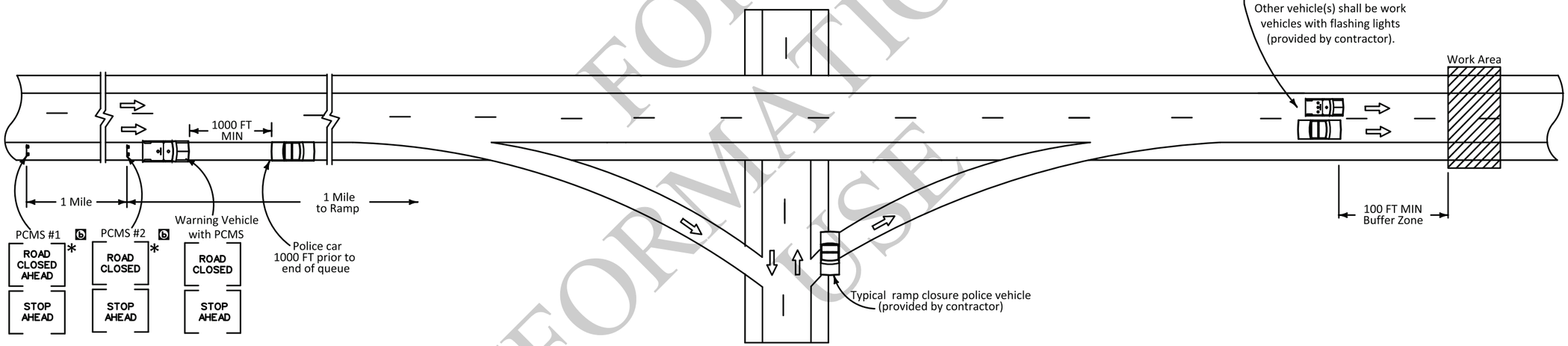

NOTES

This sheet shall be used with the Temporary Traffic Control General Notes Sheets TTC-00(A), TTC-00(B), TTC-00(C), and other Temporary Traffic Control Sheets as appropriate.

1) This layout represents the minimum traffic controls required for short duration closure of divided highways.

2) This type of highway closure shall only be used for emergencies or for construction operations approved by the Engineer and when the duration of closure will not exceed 15 minutes. After the divided highway has been closed and reopened via this procedure a minimum period of 30 minutes or queue dissipation shall elapse before another short duration closure, except with the approval of the Engineer.

3) A minimum of two police officers and two police cars shall be provided on each approach to the closure. Each police car shall have a roof mounted rotation blue light or blue bar.

4) All workers involved in the closure shall maintain radio communications at all times.

LEGEND

- Direction of Travel
- Police Car
- Work Vehicle with Green/Amber Light
- Warning Vehicle with PCMS

ALL TTC STANDARDS SHOW MINIMUM CONSTRUCTION SIGNING.
ALL SITUATIONS SHALL BE REVIEWED AND/OR DESIGNED BY THE ENGINEER.
CONTRACTORS ARE RESPONSIBLE FOR COMPLYING WITH ALL TTC STANDARDS.

FOR INFORMATIONAL USE

SHEET NUMBER

PARISH	CONTROL SECTION	STATE PROJECT
DESIGN G. Dunn / CHECK B. Boucher	DETAIL G. Dunn / CHECK B. Boucher	REVIEW / SERIES #

APPROVED BY CHIEF ENGINEER: DATE: 5/21/2026

NO.	DATE	REVISION OR CHANGE ORDER DESCRIPTION	BY
	5-12-26	General corrections	

STATE OF LOUISIANA

TEMPORARY TRAFFIC CONTROL
FOR SHORT DURATION CLOSING OF DIVIDED HIGHWAYS

TTC-15

DOTD
LOUISIANA DEPARTMENT OF TRANSPORTATION & DEVELOPMENT

STANDARD PLAN

ADVANCE WARNING SIGN DURING ROAD CLOSURE

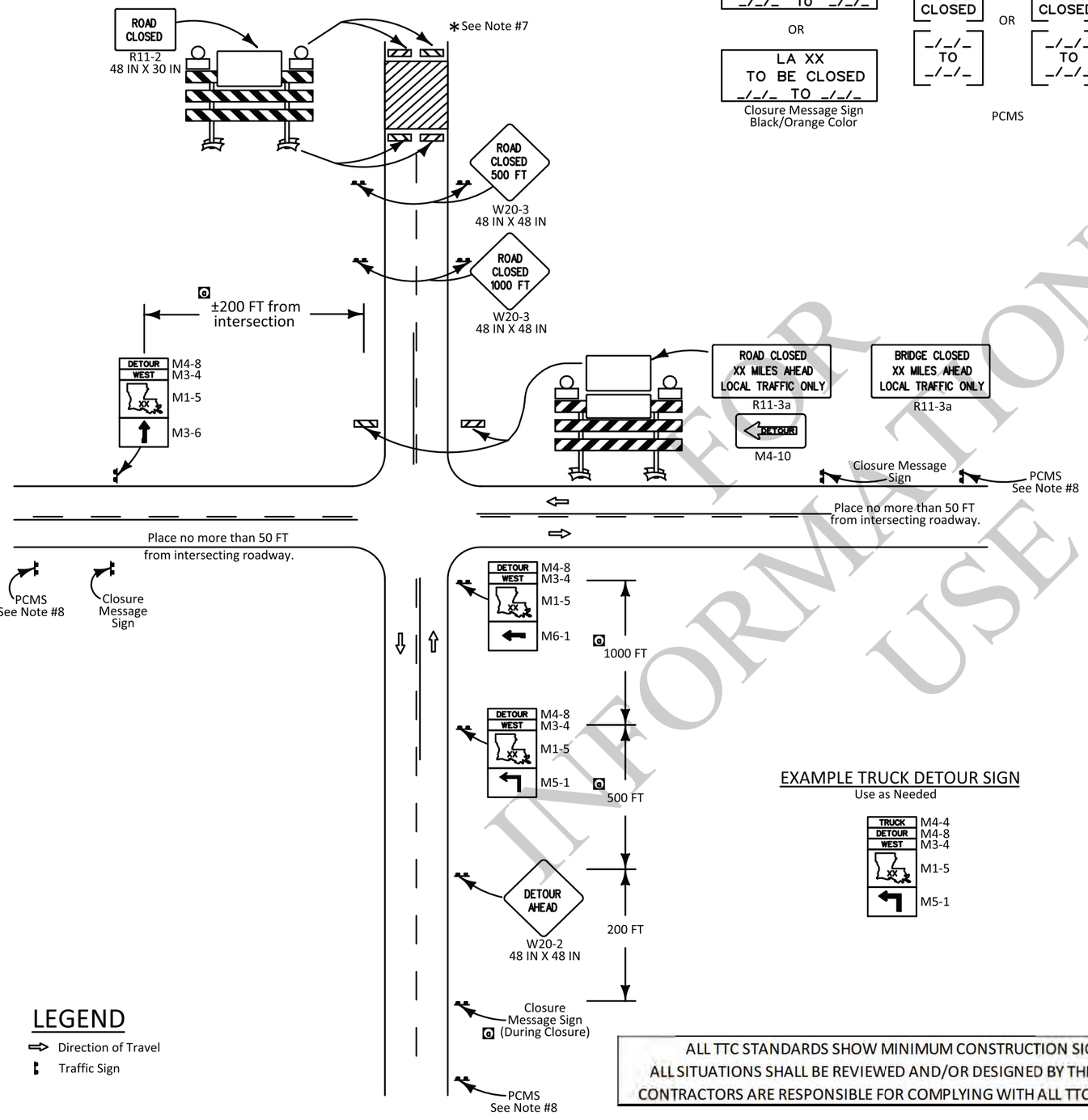

7 DAYS PRIOR TO ROAD CLOSURE
See Note #4 and #8

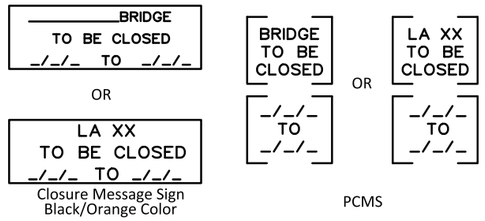

DURATION OF ROAD CLOSURE
See Note #4 and #8

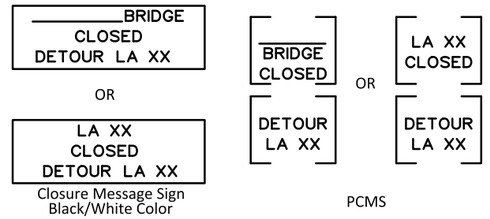

EXAMPLE TRUCK DETOUR SIGN
Use as Needed

LEGEND
- Direction of Travel
- Traffic Sign

ALL TTC STANDARDS SHOW MINIMUM CONSTRUCTION SIGNING.
ALL SITUATIONS SHALL BE REVIEWED AND/OR DESIGNED BY THE ENGINEER.
CONTRACTORS ARE RESPONSIBLE FOR COMPLYING WITH ALL TTC STANDARDS.

NOTES

This sheet shall be used with the Temporary Traffic Control General Notes Sheets TTC-00(A), TTC-00(B), TTC-00(C), and other Temporary Traffic Control Sheets as appropriate.

1) This layout represents the generic traffic controls required for road closure on a two-lane roadway. A specific detour plan with all required signs and routes is required for all detours.

2) Any signs in conflict with detour signing shall be removed or covered.

3) Closure Message Sign or PCMS shall be placed 7 days prior to road closure on all approaches to the closure. This sign shall be placed no farther than 50 FT from the work area to be closed.

4) Closure Message Sign or PCMS shall be placed on all approaches to the closure for the duration of the road closure. Minimum letter size on static signs shall be 8 inches.

5) Detour routes shall only be state-maintained routes, unless the project manager has made an agreement with the road owner.

6) Not all detour signs are shown. The DTOE shall approve all detours. The contractor shall be responsible for placing and maintaining all detour signs. There should be a sign at every decision point.

7) The signing is to be mirrored in the opposite direction.

8) PCMS shall be used in addition to the closure message sign on all highways with an ADT greater than 20,000. Place at a location approved by the Engineer.

9) A complete detour map shall be included with the set of plans. If there are changes in the routing, including changes that only affect truck traffic, then the contractor will need to submit them to the Engineer for approval.

FOR INFORMATIONAL USE

SHEET NUMBER

PARISH | CONTROL SECTION | STATE PROJECT

DESIGN G. Dunn | CHECK B. Boucher | DETAIL G. Dunn | CHECK B. Boucher | REVIEW | SERIES #

APPROVED BY CHIEF ENGINEER: DATE: 5/21/2026

NO.	DATE	REVISION OR CHANGE ORDER DESCRIPTION	BY
	6-12-25	Numbers adjusted and text added	

TEMPORARY TRAFFIC CONTROL
FOR ROAD CLOSURES
TTC-16

DOTD LOUISIANA DEPARTMENT OF TRANSPORTATION & DEVELOPMENT

STANDARD PLAN

LEGEND

Flashing Arrow Board (Type 'C')

Work Area

Direction of Travel

Work Vehicle

Police Vehicle with Flashing Lights

Truck with Green/Amber Light and TMA

Warning Vehicle with PCMS

NOTES

This sheet shall be used with the Temporary Traffic Control General Notes Sheets TTC-00(A), TTC-00(B), TTC-00(C), and other Temporary Traffic Control Sheets as appropriate.

1) This layout represents the minimum traffic controls required for moving operations, such as striping, street sweeping, etc., on interstates and multi-lane roadways. This layout shall not be used for placing signs or pavement legends along the roadway.

2) Distances between vehicles shall vary and should be adjusted due to drying time and sign obstructions such as overpasses and hills.

3) Striping operation is shown for the right lane. Left lane operation is the same, but opposite. If the roadway is greater than 2 lanes, a traffic control plan will be designed.

4) If a queue greater than 30 minutes (about 2 miles) exists, the contractor shall cease operations and pull over to the shoulder until the queue dissipates.

5) The protection vehicles shall be equipped with a flashing green/amber light and a truck mounted attenuator. This vehicle shall move with work operations not to exceed the roll-ahead distance required by the manufacturer plus 100 feet.

6.) All construction vehicles with flashing lights shall use green/amber colors.

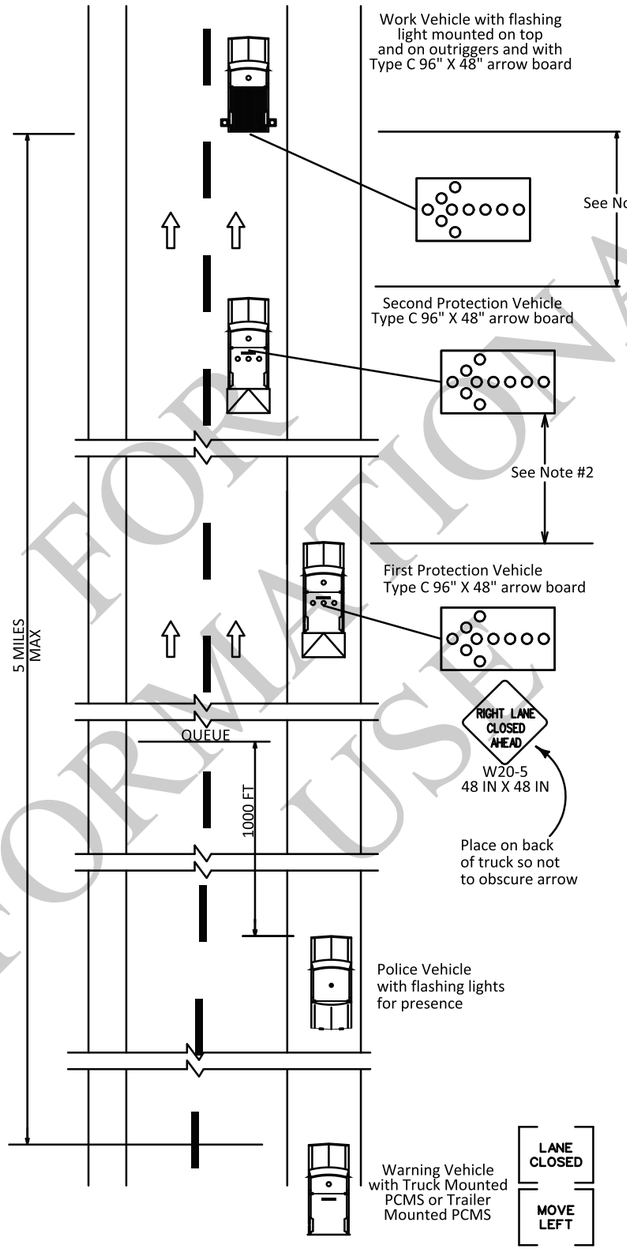

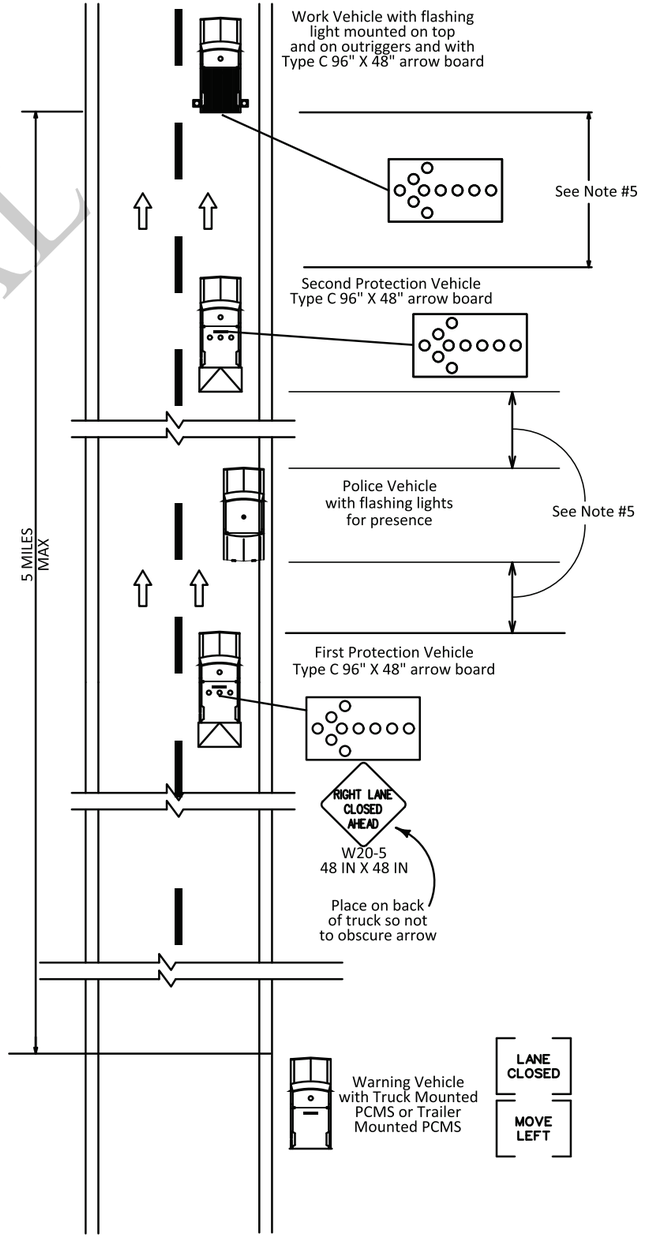

ALL TTC STANDARDS SHOW MINIMUM CONSTRUCTION SIGNING.
ALL SITUATIONS SHALL BE REVIEWED AND/OR DESIGNED BY THE ENGINEER.
CONTRACTORS ARE RESPONSIBLE FOR COMPLYING WITH ALL TTC STANDARDS.

FOR INFORMATIONAL USE

SHEET NUMBER

PARISH | CONTROL SECTION | STATE PROJECT

DESIGN G. Dunn | CHECK B. Boucher | DETAIL G. Dunn | CHECK B. Boucher | REVIEW | SERIES #

APPROVED BY CHIEF ENGINEER: DATE: 5/21/2024

NO. | DATE | REVISION OR CHANGE ORDER DESCRIPTION | BY

STATE OF LOUISIANA DEPARTMENT OF TRANSPORTATION AND DEVELOPMENT

TEMPORARY TRAFFIC CONTROL
MOVING OPERATIONS FOR INTERSTATE AND MULTI-LANE ROADWAYS
TTC-17

DOTD LOUISIANA DEPARTMENT OF TRANSPORTATION & DEVELOPMENT

STANDARD PLAN

NOTES

This sheet shall be used with the Temporary Traffic Control General Notes Sheets TTC-00(A), TTC-00(B), TTC-00(C), and other Temporary Traffic Control Sheets as appropriate.

1) This layout represents the minimum traffic controls required for moving operations on two-lane roads with two-way traffic, such as striping, street sweeping, and placement of raised pavement markers.

2) Distances between vehicles may vary and should be adjusted due to drying time and sight obstructions such as overpasses and hills. Vehicles with attenuators shall move with work operations. Buffer space shall not exceed roll-ahead distance required by the manufacturer plus 100 feet.

3) If a queue greater than 5 minutes (about 1000 feet) exists, the contractor shall cease operations and pull over to the shoulder until the queue dissipates.

4) Flaggers may be used with this layout, if needed. See TTC-00(B).

5) All construction vehicles with flashing lights shall use green/amber colors.

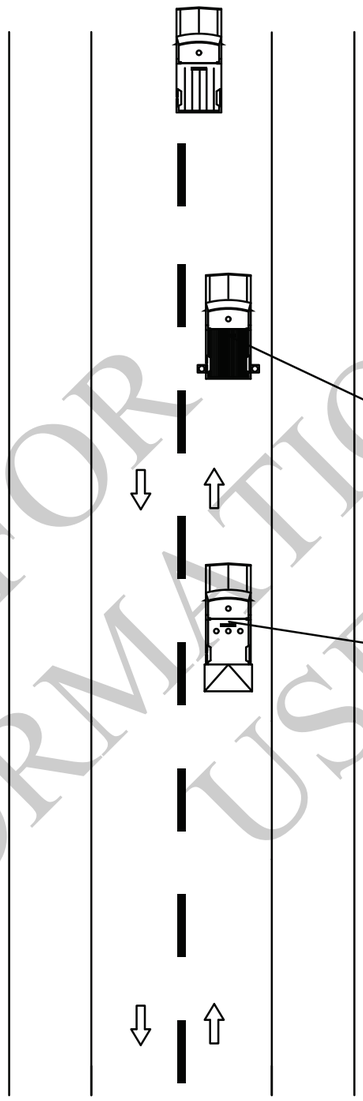

(Optional) Lead Vehicle straddling centerline with flashing lights may be used.

Work Vehicle with flashing light mounted on top and on outriggers and with Type C 96" X 48" arrow board in caution mode

CAUTION
WET PAINT
18 IN X 48 IN

Place this sign on back of work vehicle during striping operations.

First Protection Vehicle with flashing lights and Truck Mounted Attenuator.

*
ROAD WORK AHEAD
W20-1
48 IN X 48 IN

OR

CAUTION
STRIPING MACHINE AHEAD
KEEP OFF WET PAINTED LINES
36 IN X 48 IN

Place this sign on back of protection vehicle during striping operations.

* Any sign of the W20-1 series may be used.

LEGEND

- Direction of Travel
- Work Vehicle
- Lead Vehicle
- Protection Vehicle

ALL TTC STANDARDS SHOW MINIMUM CONSTRUCTION SIGNING.
ALL SITUATIONS SHALL BE REVIEWED AND/OR DESIGNED BY THE ENGINEER.
CONTRACTORS ARE RESPONSIBLE FOR COMPLYING WITH ALL TTC STANDARDS.

FOR INFORMATIONAL USE

SHEET NUMBER

PARISH	CONTROL SECTION	STATE PROJECT

DESIGN	G. Dunn
CHECK	B. Boucher
DETAIL	G. Dunn
CHECK	B. Boucher
REVIEW	
SERIES #	

APPROVED BY CHIEF ENGINEER:
DATE: 5/21/2026

NO.	DATE	REVISION OR CHANGE ORDER DESCRIPTION	BY

TEMPORARY TRAFFIC CONTROL
FOR MOVING OPERATIONS ON TWO-WAY TWO-LANE ROADWAYS
TTC-18

DOTD
LOUISIANA DEPARTMENT OF TRANSPORTATION & DEVELOPMENT

STANDARD PLAN

SIGNAL WORK ON A MULTI-LANE ROADWAY FOR UP TO ONE HOUR

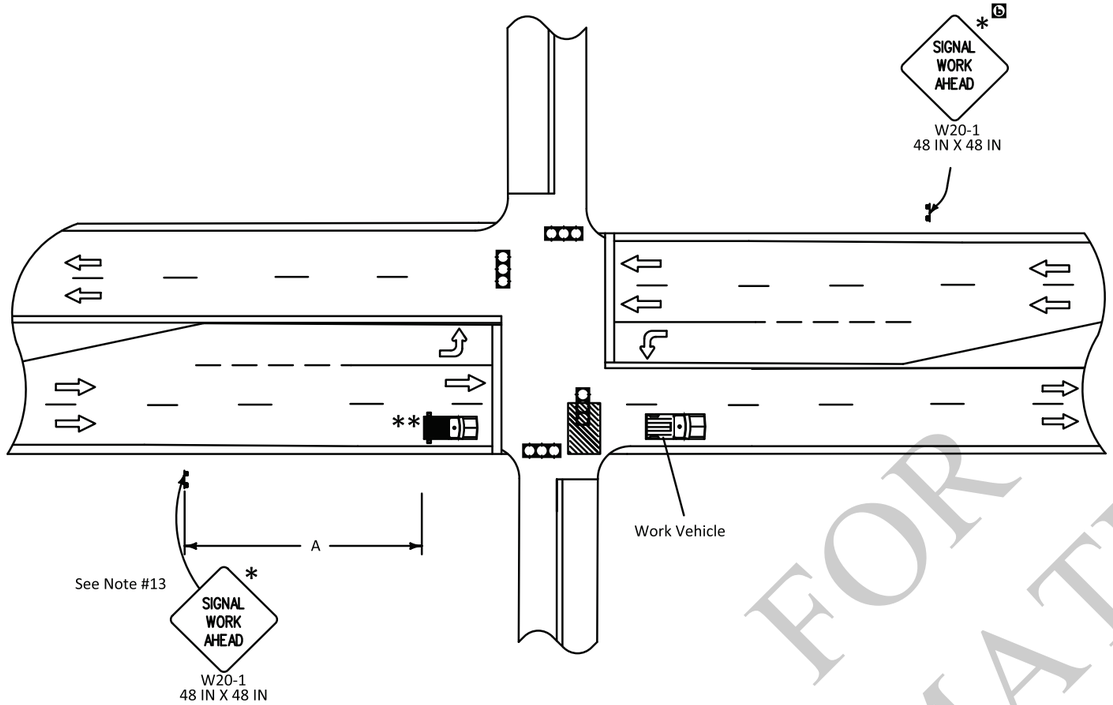

SIGNAL WORK ON A TWO-LANE TWO-WAY ROADWAY

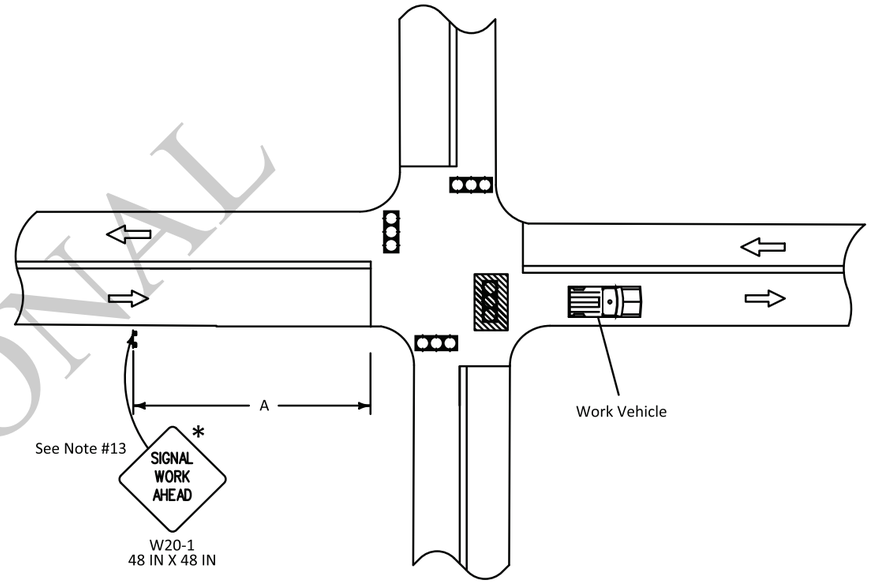

NOTES

This sheet shall be used with the Temporary Traffic Control General Notes Sheets TTC-00(A), TTC-00(B), TTC-00(C), TTC-00(D), and other Temporary Traffic Control Sheets as appropriate.

1) This layout represents the minimum traffic controls required during signal construction and maintenance.

2) For projects with multiple signals, the contractor shall construct only one signal at a time, unless approved by DTOE and PE.

3) If the signal at an intersection is turned off, the intersection may operate as a 4-way stop with approval by the Engineer and the DTOE. The contractor shall be responsible for installing and removing all stop signs at the intersection.

4) A detour plan is required if the road will be closed to through traffic at any approach.

5) A uniformed police officer shall direct traffic for short duration lane closures and signal turn-ons.

6) The turn lane may be used as a through lane if a minimum 10-foot lateral clearance to the work zone can be maintained and opposing traffic is not impeded.

7) A signal timing and phasing plan shall be developed for each phase of construction.

8) Place "Road Work Ahead" (W20-1) sign prior to an intersecting alternate route, no more than 1500 feet from the work area.

9) All sign height shall be at least 7 feet in business, commercial, and residential areas and also near parking, pedestrians, bicyclists, or other obstructions.

10) All work must be done during off-peak hours.

11) The contractor shall not work on both through lanes at the same time.

12) For signal work on a multi-lane roadway greater than 1 hour, see TTC-09 or TTC-10.

13) If the expected or actual queue length exceeds the distance in Table 2C-3 in the MUTCD, place an additional "Signal Work Ahead" (W20-1) sign at the end of the queue.

14) For two-lane two-way roadways, a police car with flashing lights and 2 police officers will be required for intersection traffic control.

15) Left turn lanes shall be closed whenever work is being performed in path of left hand turner.

16) Position of work vehicle may vary according to work required.

* Any sign of the W20-1 series may be used.

** For posted speed over 45 mph, use TMA.

SPEED LIMIT (prior to construction)	SPACING A
≤ 40 mph	125 FT
45-50 mph	350 FT
b ≥ 55 mph	500 FT

LEGEND

- Traffic Sign
- Work Vehicle
- Truck with Flashing Arrow Panel
- Work Area
- Direction of Travel
- Traffic Signal

ALL TTC STANDARDS SHOW MINIMUM CONSTRUCTION SIGNING.
ALL SITUATIONS SHALL BE REVIEWED AND/OR DESIGNED BY THE ENGINEER.
CONTRACTORS ARE RESPONSIBLE FOR COMPLYING WITH ALL TTC STANDARDS.

FOR INFORMATIONAL USE

SHEET NUMBER

PARISH	CONTROL SECTION	STATE PROJECT

DESIGN	G. Dunn	DETAIL	G. Dunn	REVIEW	SERIES #
CHECK	B. Boucher	CHECK	B. Boucher		

APPROVED BY CHIEF ENGINEER: DATE: 5/21/2026

NO.	DATE	REVISION OR CHANGE ORDER DESCRIPTION	BY
1	5-12-26	General corrections	
2	6-12-25	Text Added and Adjusted	

STATE OF LOUISIANA

TEMPORARY TRAFFIC CONTROL
FOR TRAFFIC SIGNAL INSTALLATION AND MAINTENANCE AT AN INTERSECTION

TTC-19

DOTD
LOUISIANA DEPARTMENT OF TRANSPORTATION & DEVELOPMENT

STANDARD PLAN

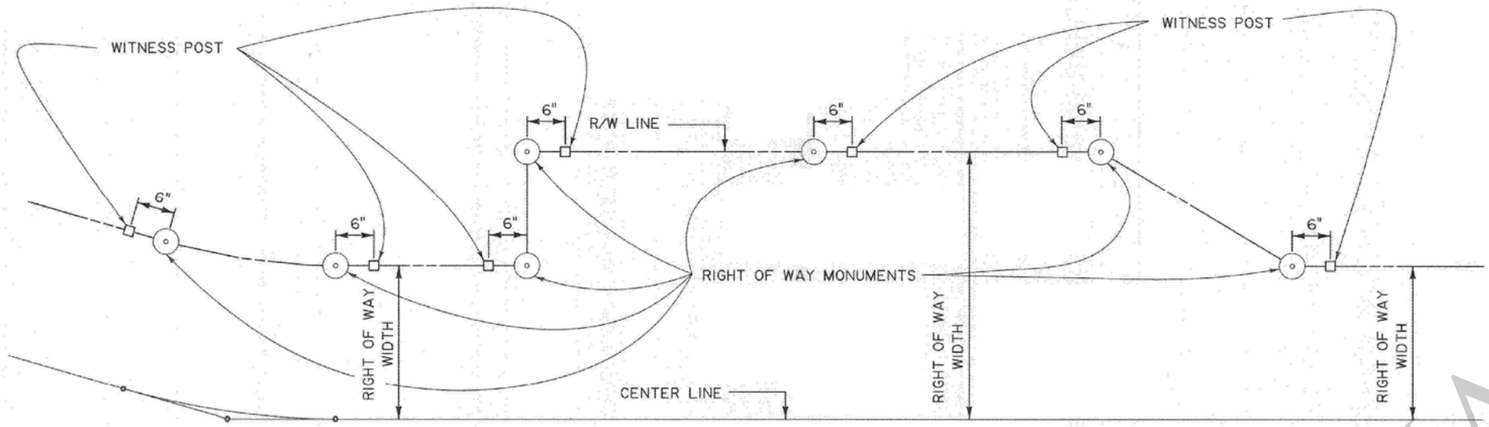

STANDARD RIGHT OF WAY MONUMENT
WITNESS POST
PLAN SHOWING WHERE POSTS ARE TO BE PLACED

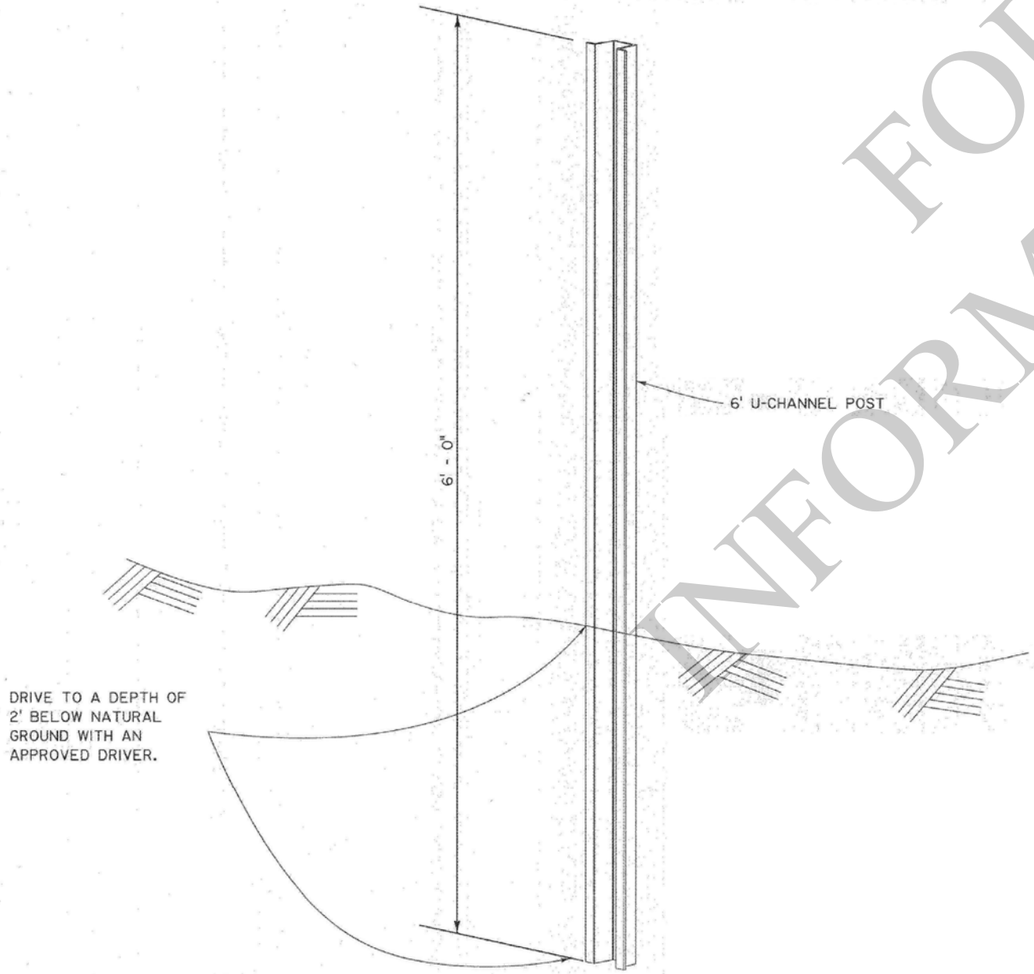

WITNESS POST SHALL CONSIST OF A U-CHANNEL POST AND RIGHT OF WAY MARKER SIGN DESCRIBED FURTHER AS A HEAVY DUTY GALVANIZED U-CHANNEL POST WEIGHING APPROXIMATELY 2 POUNDS PER FOOT, BEING 6 FOOT IN LENGTH, WITH 3/8 INCH BOLT HOLES SPACED 1 INCH APART ALONG THE LENGTH OF THE POST. THE SIGN SHALL BE MADE OF ALUMINUM WITH A THICKNESS OF 1/16 INCH, MEASURING 6 1/2 INCHES BY 10 1/2 INCHES WITH A DURABLE DECAL AND HAVING 2 BOLT HOLES, SPACED 9 INCHES APART, TO ACCOMMODATE A 3/8 INCH BOLT. THE POST AND SIGN MUST MEET THE STANDARDS AS SHOWN ON THE PLANS OR AN APPROVED EQUAL. SUBSTITUTIONS MUST BE APPROVED BY THE LOCATION AND SURVEY SECTION ADMINISTRATOR, BATON ROUGE, LOUISIANA.

THE SIGN SHALL BE FASTENED TO THE POST USING EITHER GALVANIZED OR STAINLESS STEEL BOLTS, NUTS AND WASHERS, WITH SAID BOLT BEING 3/8 INCH DIAMETER AND LONG ENOUGH TO PROTRUDE 1/2 INCH OR LONGER BEYOND THE REAR OF THE POST.

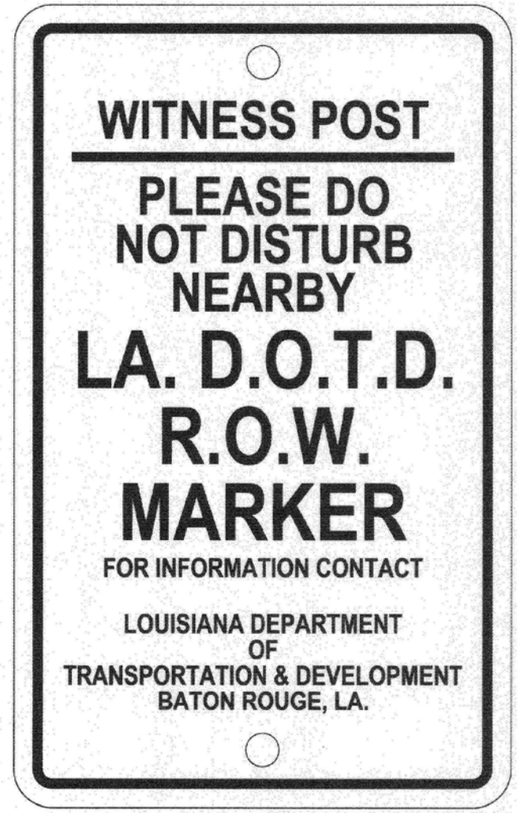

FOR INFORMATIONAL USE

SHEET NUMBER

PARISH | CONTROL SECTION | STATE PROJECT

DESIGN CHECK | DETAIL CHECK | REVIEW | SERIES # 1 OF 1

APPROVED BY CHIEF ENGINEER:

DATE: 6/1/2026

NO.	DATE	REVISION OR CHANGE ORDER DESCRIPTION	BY

RIGHT OF WAY MONUMENT
WITNESS POSTS

WP-01

DOTD LOUISIANA DEPARTMENT OF TRANSPORTATION & DEVELOPMENT

STANDARD PLAN

9/18/2025 12:3

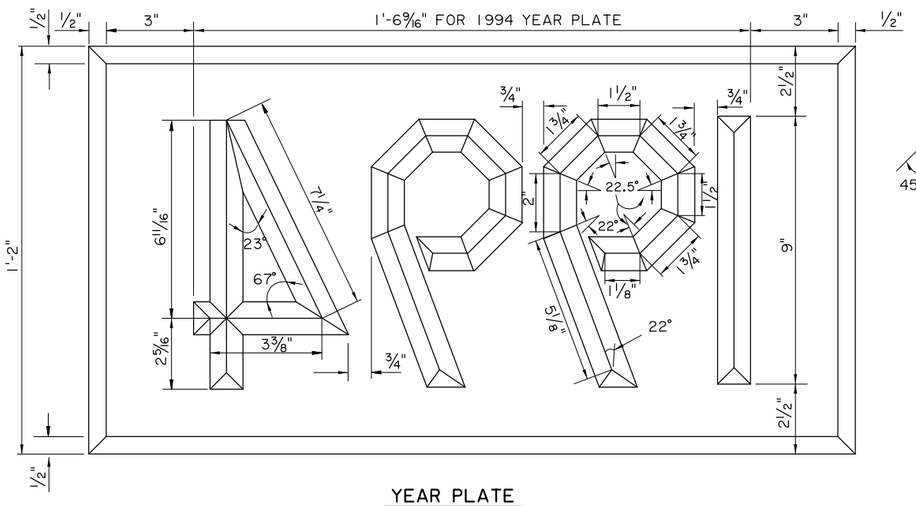

YEAR PLATE

DIMENSIONS SHOWN ARE FOR LARGE YEAR PLATE.
USE ONE HALF (1/2) ABOVE DIMENSIONS FOR SMALL YEAR PLATE.
YEAR PLATE TO CORRESPOND TO YEAR IN WHICH STRUCTURE IS COMPLETED.

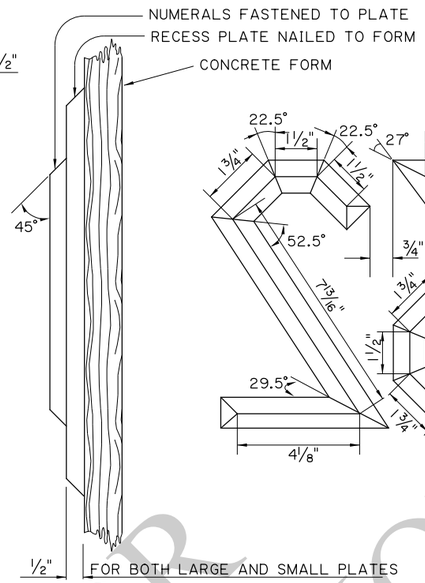

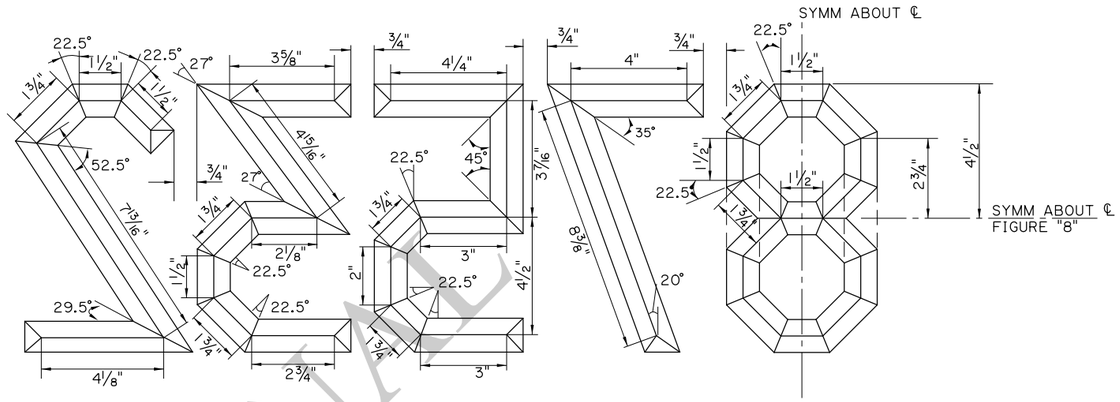

NUMERALS

NOTE:
FIGURE "6" TO BE "9" INVERTED.
FIGURE "0" TO BE MADE USING DASHED LINES INDICATED ON DETAIL OF FIGURE "8."
DIMENSIONS SHOWN ARE FOR LARGE YEAR PLATE.
USE ONE-HALF (1/2) ABOVE DIMENSIONS FOR SMALL YEAR PLATE.

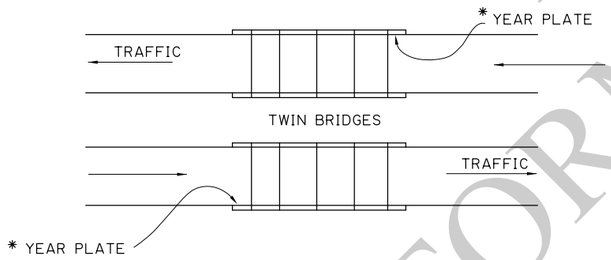

BRIDGE PLAN

*YEAR PLATE ON THE APPROACH SIDE OF BOTH ENDS ON TWO-WAY TRAFFIC BRIDGES.

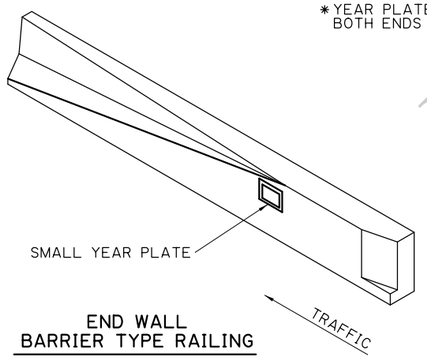

END WALL
BARRIER TYPE RAILING

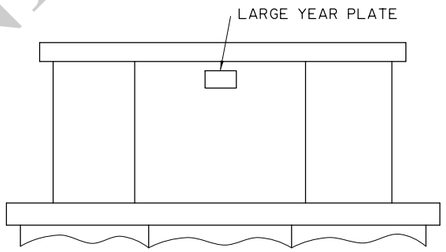

PIER ELEVATION

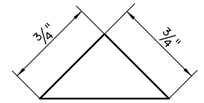

FULL SIZE CROSS-SECTION OF 3/4" CHAMFER STRIP TO BE USED IN CONSTRUCTION OF ALL NUMERALS.

CHAMFER STRIP FOR LARGE YEAR PLATE

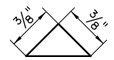

FULL SIZE CROSS SECTION OF 3/8" CHAMFER STRIP TO BE USED IN CONSTRUCTION OF ALL NUMERALS.

CHAMFER STRIP FOR SMALL YEAR PLATE

SKETCHES SHOWING LOCATION OF YEAR PLATE ON VARIOUS CONCRETE STRUCTURES

FOR INFORMATIONAL USE

SHEET NUMBER

PARISH	CONTROL SECTION	STATE PROJECT

DESIGN	KELLY KEMP	DETAIL	A. WILLIAMS	REVIEW MARK BUCCI
CHECK	WEI PENG	CHECK	KELLY KEMP	SERIES # 1 OF 1

APPROVED BY CHIEF ENGINEER: DATE: Oct. 1, 2025

NO.	DATE	REVISION OR CHANGE ORDER DESCRIPTION	BY

YEAR PLATE
FOR CONCRETE STRUCTURES
YP-01

DOTD LOUISIANA DEPARTMENT OF TRANSPORTATION & DEVELOPMENT

STANDARD PLAN

IP_PWP:d1235171\yp-01.dgn