PROJECT	PARISH	SHEET No.

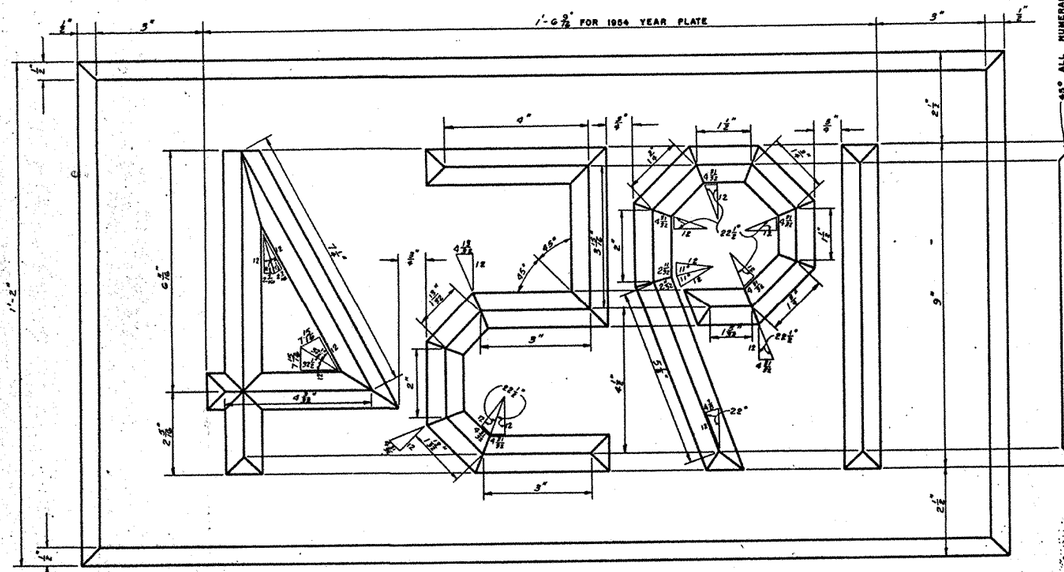

YEAR PLATE

DIMENSIONS SHOWN ARE FOR LARGE PLATE, USE ONE-HALF (½) ABOVE DIMENSIONS FOR SMALL PLATES.
YEAR PLATE TO CORRESPOND TO YEAR IN WHICH STRUCTURE IS COMPLETED.

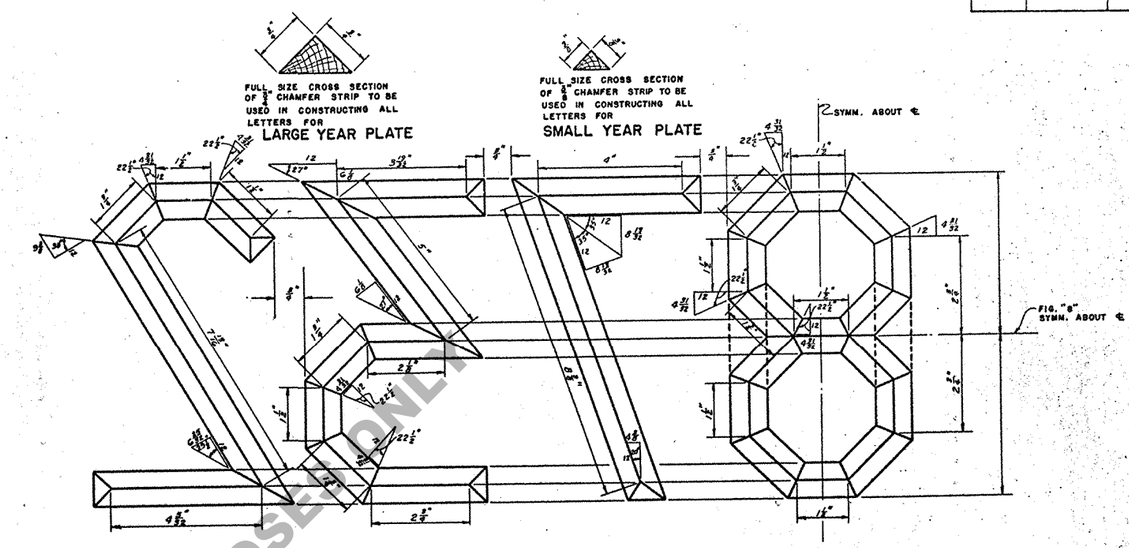

NOTE:
FIGURE "6" TO BE "9" INVERTED.
FIGURE "0" TO BE MADE AS DASHED LINES INDICATE ON DETAIL OF FIGURE "8".
FIGURE DETAILS ARE HALF SCALE FOR LARGE YEAR PLATE.
FIGURE DETAILS ARE FULL SCALE FOR SMALL YEAR PLATE.
DIMENSIONS SHOWN ARE FOR LARGE YEAR PLATE.
USE ½ DIMENSIONS SHOWN FOR SMALL YEAR PLATE.

FOR INFORMATIONAL PURPOSES ONLY

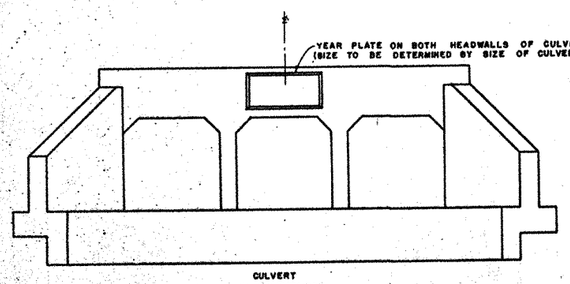

CULVERT
ELEVATION

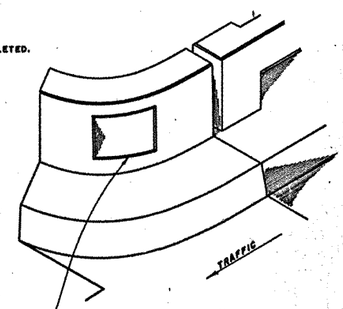

BRIDGE
END FLARE

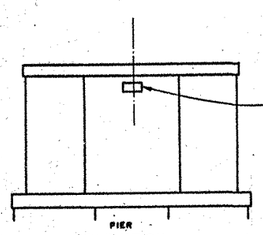

PIER
ELEVATION

LARGE YEAR PLATE

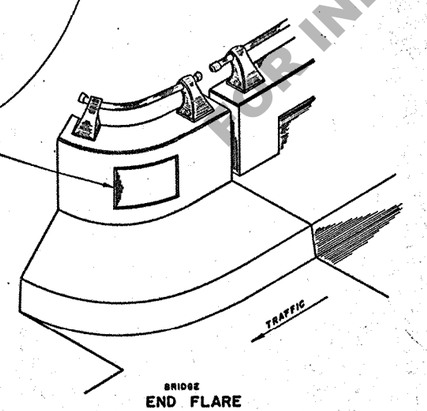

BRIDGE
END FLARE

SKETCHES SHOWING LOCATION OF YEAR PLATE ON VARIOUS CONCRETE STRUCTURES

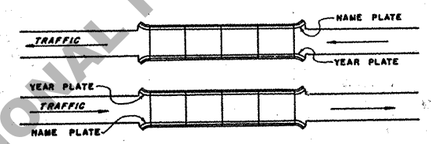

PLATE LOCATIONS FOR
TWIN BRIDGE SITES

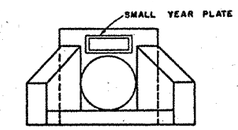

PIPE CULVERT HEADWALL
YEAR PLATE REQUIRED ON BOTH HEADWALLS OF CULVERT

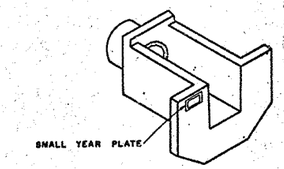

PIPE HEADWALL
OPEN END

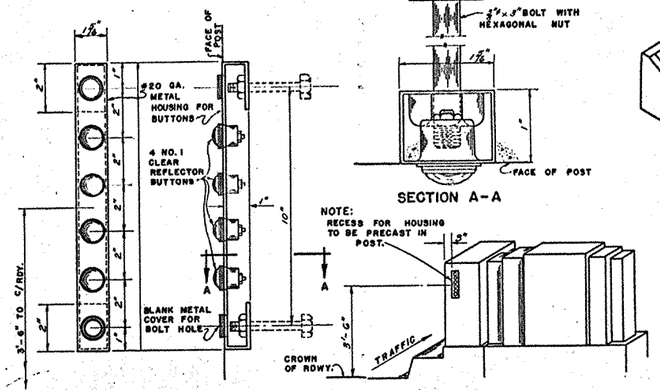

DELINEATOR DETAILS
DELINEATOR FOR CONC. END RAIL POST HIGHWAY BRIDGES

NOT REQUIRED UNLESS SPECIFIED ON GEN. PLAN

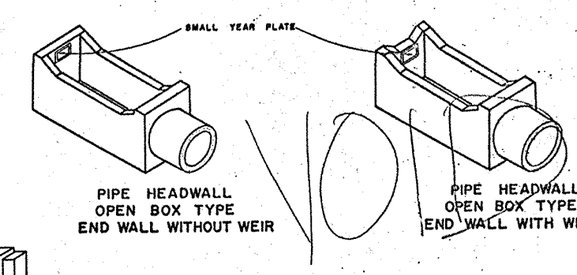

PIPE HEADWALL
OPEN BOX TYPE
END WALL WITHOUT WEIR

PIPE HEADWALL
OPEN BOX TYPE
END WALL WITH WEIR

DATE	DESCRIPTION	BY
2-25-52	REDETAILED & RETRACED	W.P.Y./E.C.
1-60	DELINEATOR OMITTED	
3-44	DELINEATOR ADDED	C.E.A.
10-30	NEW SPEC. & RECORD.	J.C.M.
10-40	RETRACED	H.I.H.

REVISIONS

STANDARD PLAN
YEAR PLATES
FOR CONCRETE STRUCTURES
(TO BE USED WITH STD. PLAN C.M. 95 WHEN ALPHABET IS REQ'D.)

DATED JULY 1939

STATE OF LOUISIANA
DEPARTMENT OF HIGHWAYS

DESIGNED	DETAILED R.H.W.	TRACED E. Clebinger	
CHECKED	CHECKED I.R.P.	CHECKED	
IN CHARGE OF	BRIDGE DESIGN SECTION		

C.M.97