LOUISIANA DEPARTMENT OF TRANSPORTATION & DEVELOPMENT

Office of Engineering
Project Development Division
Bridge Design Section
PO Box 94245 | Baton Rouge, LA 70804-9245
Phone: 225-379-1302

John Bel Edwards, Governor
Shawn D. Wilson., Ph.D., Secretary

MEMORANDUM

TO: ALL CONSULTANTS
ALL BRIDGE DESIGNERS

FROM: ZHENGZHENG "JENNY" FU, P.E.
BRIDGE DESIGN ENGINEER ADMINISTRATOR

SUBJECT: BRIDGE DESIGN TECHNICAL MEMORANDUM NO. 83 (BDTM.83)
PUBLICATION OF 36" SINGLE SLOPE BRIDGE BARRIER SPECIAL DETAILS

DATE: AUGUST 20, 2018

Effective immediately, use of the subject special details, "36 Inch Single Slope Bridge Barrier Special Details", with a signature date of August 20, 2018, shall be implemented for all applicable projects currently in the preliminary plan stage and projects to be let after December 31, 2019. The new single slope barrier may be used in projects letting prior to December 31, 2019 if it will not affect the project scope, schedule or budget.

According to the AASHTO/FHWA Joint Implementation Agreement of the Manual for Assessing Safety Hardware dated Jan 7, 2016 (Attachment A), for contracts on the National Highway System with a letting date after December 31, 2019, only MASH-compliant bridge rails will be allowed for new permanent installations and full replacements. Therefore, it is LADOTD's policy to use single slope, MASH Test Level 4 (TL-4), bridge barriers on all on-system bridges. Any deviations from this policy require an approved design waiver from the Bridge Design Engineer Administrator.

This publication consists of the following sheets, organized into common details and specific details:

BD.2.6.1.1.01 – Bridge Barrier Common – General Notes and Index
BD.2.6.1.3.01 – 36" Single Slope Mash TL-4 Bridge Barrier Details
BD.2.6.1.3.02 – 36" Single Slope Transition on Bridge Span
BD.2.6.1.3.03 – 36" Single Slope Transition on Wingwall

These new details are classified as MASH TL-4 and have been published in Projectwise for use.

Notes on Usage of Details:

1. The 36" single slope barrier special details are based on a MASH TL-4 barrier crash tested by Texas Transportation Institute (TTI). (See Attachment B for TTI Test Report No. 9-1002-5). The weight of the 36" single slope barrier is 376 lb/ft.

2. When using this new bridge barrier, the Engineer of Record must design the bridge overhang reinforcement in accordance with the AASHTO LRFD Bridge Design Specifications. As a minimum, the deck overhang must provide an equivalent capacity as the test section bridge deck. The test section bridge deck was 8 inches thick and 30 inches wide with 60 ksi #5 transverse bars (6" spacing in top mat, 18" in bottom mat), as shown in TTI Test Report No. 9-1002-5, pages 11-14 in Attachment B.

Inactive

3. The new pay item is "810-01-00120 – Concrete Bridge Railing (36 inch Height)". This item includes both the slotted and standard (non-slotted) railing options. The project General Plan and/or Span Details shall indicate the required locations for slotted or standard railings. Drain slots shall not be constructed over wingwalls or in transition sections.

4. "BD.2.6.1.1.01 – Bridge Barrier Common – General Notes and Index" and "BD.2.6.1.3.01 – 36" Single Slope Bridge Barrier Details" shall be included in all projects using 36" single slope barrier. The transition details (BD.2.6.1.3.02 and BD.2.6.1.3.03) shall be selected per bridge types. For example, slab span and quad beam bridges have barrier transitions on the span itself, therefore, the "BD.2.6.1.3.02 – 36" Single Slope Transition on Bridge Span" is required for a plan set with only these types of bridges. Similarly, a project with girder bridges with wingwalls requires only the "BD.2.6.1.3.03 – 36" Single Slope Transition on Wingwall". For projects with multiple barrier transition types, the bridge General Plan(s) shall indicate the appropriate bridge transition type and all applicable transition details shall be included in the plan set. See example plan sets below.

5. For girder bridges, the wingwall width shall be 1'-3" to match the transition width shown on BD.2.6.1.3.03. The reinforcement in the wingwall (stirrups/temperature/shrinkage steel) can now be looped/wrapped in the wingwall instead of projecting into the barrier/barrier transition as is shown in the existing 32" F-Shape bridge barrier (Legacy BR-01, BR-02, BR-03 and BR-05).

Inactive

Example Plan Sets:

A slab span bridge project using the 36" single slope barrier would include the following barrier sheets:

- BD.2.6.1.1.01 – Bridge Barrier Common – General Notes and Index
- BD.2.6.1.3.01 – 36" Single Slope Bridge Barrier Details
- BD.2.6.1.3.02 – 36" Single Slope Transition on Bridge Span

A girder span bridge project using the 36" single slope barrier would include the following barrier sheets:

- BD.2.6.1.1.01 – Bridge Barrier Common – General Notes and Index
- BD.2.6.1.3.01 – 36" Single Slope Bridge Barrier Details
- BD.2.6.1.3.03 – 36" Single Slope Transition on Wingwall

A bridge project using the 36" single slope barrier with a girder span at one end and slab span at another end would include the following barrier sheets:

- BD.2.6.1.1.01 – Bridge Barrier Common – General Notes and Index
- BD.2.6.1.3.01 – 36" Single Slope Bridge Barrier Details
- BD.2.6.1.3.02 – 36" Single Slope Transition on Bridge Span
- BD.2.6.1.3.03 – 36" Single Slope Transition on Wingwall

Upcoming Additions to Bridge Barrier Special Details:

1. Special Details for 36" single slope transition to 4" and 6" curbs will be developed.
2. Special Details for 32" F-Shape MASH TL-3 bridge barrier will be developed.

Existing Bridge Barrier Special Details:

The existing 32" F-Shape barrier (Legacy BR-01, BR-02, BR-03 and BR-05) will remain in use for off-system bridge projects, temporary detour bridges and projects in final plan stage that will be let prior to December 31, 2019.

This technical memorandum is posted on the LA DOTD Website under *Inside La DOTD* > *Divisions - Engineering* > *Bridge Design* > *Technical Memoranda – BDTMs.*

Please contact Ms. Zhengzheng "Jenny" Fu (225-379-1321, zhengzheng.fu@la.gov) if you have questions or comments.

ZZF/abl

Attachment

Cc: Chris Knotts (Chief Engineer)
Chad Winchester (Chief, Project Development Division)
Edward Wedge (Deputy Engineer Administrator)
Vince Latino (Assistant Secretary of Operations)
David Miller (Chief Maintenance Administrator)
Nick Fagerburg (Bridge Maintenance Administrator)
Michael Vosburg (Chief Construction Division Engineer)
Brian Kendrick (Project Management Director)
Chris Nickel (Pavement and Geotechnical Engineer Administrator)
David Smith (Road Design Engineer Administrator)
Jacques Deville (Contracts and Specifications)
Art Aguirre (FHWA)
District Administrators, ADA Engineering, ADA Operations, and District Bridge Engineers and Area Engineers

Inactive

U.S. Department of Transportation
Federal Highway Administration

Memorandum

ATTACHMENT A

Subject: **INFORMATION:** AASHTO/FHWA Joint Implementation Agreement for Manual for Assessing Safety Hardware (MASH)

Date: JAN - 7 2016

From: Thomas Everett
Director, Office of Program Administration

Michael S. Griffith
Director, Office of Safety Technologies

In Reply Refer To: HSST

To: Division Administrators
Directors of Field Services
Federal Lands Highway Division Directors

Inactive

Purpose

The purpose of this memorandum is to share information regarding the American Association of State Highway and Transportation Officials (AASHTO)/FHWA Joint Implementation Agreement for the AASHTO Manual for Assessing Safety Hardware (MASH). Recently, the agreement was successfully balloted by AASHTO's Standing Committee on Highways and approved by FHWA.

Information

On November 12th, 2015, FHWA issued a memorandum (http://safety.fhwa.dot.gov/roadway_dept/policy_guide/road_hardware/policy_memo/memo111215/) indicating that all modifications to NCHRP 350-tested devices will require testing under MASH in order to receive a Federal-aid eligibility letter from FHWA. In addition, a Federal Register Notice (https://www.federalregister.gov/articles/2015/11/13/2015-28753/manual-for-assessing-safety-hardware-mash-transition) was also issued regarding this action. This action provided a significant step forward to the implementation of MASH.

Through the AASHTO/FHWA partnership, the agreement was executed to define actions needed for full implementation of MASH over the course of several years. Per the agreement, the implementation of the forthcoming edition (anticipated Spring 2016) of the AASHTO Manual for Assessing Safety Hardware (MASH) will be as follows:

- The AASHTO Technical Committee on Roadside Safety will continue to be responsible for developing and maintaining the evaluation criteria as adopted by

AASHTO. FHWA will continue its role in issuing letters of eligibility of roadside safety hardware for federal-aid reimbursement.

- Agencies are urged to establish a process to replace existing highway safety hardware that has not been successfully tested to NCHRP Report 350 or later criteria.
- Agencies are encouraged to upgrade existing highway safety hardware to comply with the 2016 edition of MASH either when it becomes damaged beyond repair, or when an individual agency's policies require an upgrade to the safety hardware.
- For contracts on the National Highway System with a letting date after the dates below, only safety hardware evaluated using the 2016 edition of MASH criteria will be allowed for new permanent installations and full replacements:
    - December 31, 2017: w-beam barriers and cast-in-place concrete barriers
    - June 30, 2018: w-beam terminals
    - December 31, 2018: cable barriers, cable barrier terminals, and crash cushions
    - December 31, 2019: bridge rails, transitions, all other longitudinal barriers (including portable barriers installed permanently), all other terminals, sign supports, and all other breakaway hardware
- Temporary work zone devices, including portable barriers, manufactured after December 31, 2019, must have been successfully tested to the 2016 edition of MASH. Such devices manufactured on or before this date, and successfully tested to NCHRP Report 350 or the 2009 edition of MASH, may continue to be used throughout their normal service lives.
- Regarding the federal-aid eligibility of highway safety hardware, after December 31, 2016:
    - FHWA will no longer issue eligibility letters for highway safety hardware that has not been successfully crash tested to the 2016 edition of MASH.
    - Modifications of eligible highway safety hardware must utilize criteria in the 2016 edition of MASH for re-evaluation and/or retesting.
    - Non-significant modifications of eligible hardware that have a positive or inconsequential effect on safety performance may continue to be evaluated using finite element analysis.

Division Offices should discuss the MASH implementation agreement with state transportation agency partners and monitor the actions taken and progress towards the dates established in the agreement.

If you have any questions or comments, please contact Brian Fouch in the Office of Safety at (202) 366-0744.

Inactive

ATTACHMENT B

TTI: 9-1002

DETERMINATION OF MINIMUM HEIGHT AND LATERAL DESIGN LOAD FOR MASH TEST LEVEL 4 BRIDGE RAILS

Inactive

ACCREDITED
ISO 17025 Laboratory
Testing Certificate # 2821.01

Crash testing performed at:
TTI Proving Ground
3100 SH 47, Building 7091
Bryan, TX 77807

Test Report No. 9-1002-5

Cooperative Research Program

TEXAS TRANSPORTATION INSTITUTE
THE TEXAS A&M UNIVERSITY SYSTEM
COLLEGE STATION, TEXAS

TEXAS DEPARTMENT OF TRANSPORTATION

in cooperation with the
Federal Highway Administration and the
Texas Department of Transportation
http://tti.tamu.edu/documents/9-1002-5.pdf

Technical Report Documentation Page

1. Report No. FHWA/TX-12/9-1002-5	2. Government Accession No.	3. Recipient's Catalog No.
4. Title and Subtitle DETERMINATION OF MINIMUM HEIGHT AND LATERAL DESIGN LOAD FOR MASH TEST LEVEL 4 BRIDGE RAILS		5. Report Date October 2011 Published: December 2011 6. Performing Organization Code
7. Author(s) Nauman M. Sheikh, Roger P. Bligh, and Wanda L. Menges		8. Performing Organization Report No. Test Report 9-1002-5
9. Performing Organization Name and Address Texas Transportation Institute Proving Ground The Texas A&M University System College Station, Texas 77843-3135		10. Work Unit No. (TRAIS) 11. Contract or Grant No. Project 9-1002
12. Sponsoring Agency Name and Address Texas Department of Transportation Research and Technology Implementation Office P.O. Box 5080 Austin, Texas 78763-5080		13. Type of Report and Period Covered Test Report: August 2009–August 2010 14. Sponsoring Agency Code

15. Supplementary Notes

Project performed in cooperation with the Texas Department of Transportation and the Federal Highway Administration.

Project Title: Roadside Safety Device Crash Testing Program

URL: http://tti.tamu.edu/documents/9-1002-5.pdf

16. Abstract

The *Manual for Assessing Safety Hardware (MASH)* prescribes higher design vehicle impact speed and mass for test level 4 barriers compared to its predecessor *National Cooperative Highway Research Program (NCHRP) Report 350*. This has resulted in a 56 percent increase in impact severity for test level 4. The current American Association of State Highway Transportation Officials (AASHTO) *Load and Resistance Factor Design (LRFD) Bridge Specifications* require test level 4 bridge rails to have a minimum rail height of 32 inches and to be designed for a 54-kip lateral load. These requirements were based on *NCHRP Report 350* impact conditions and need to be revised for the higher impact severity under *MASH*. A recent *MASH* test 4-21 with a 32-inch tall New Jersey profile rigid concrete barrier, which performed acceptably under *NCHRP Report 350* TL-4, resulted in the vehicle rolling over the barrier.

This research had the objectives of determining the minimum rail height and lateral design impact load for *MASH* test level 4 bridge rails. Using parametric finite element analysis and subsequent crash testing, the researchers determined the minimum recommended rail height for *MASH* TL-4 impact conditions to be 36 inches. Lateral design impact load for *MASH* TL-4 test conditions was determined to be 80 kips.

A 36-inch tall Single Slope Traffic Rail (SSTR) that meets these rail height and lateral load capacity requirements was crash tested. The 36-inch tall SSTR successfully contained and redirected the impacting vehicle. Details of the simulation analysis, barrier design, full-scale crash testing, and crash test results are presented in this report.

17. Key Words Concrete Bridge Rail, Test Level 4, MASH, Test 4-21, Minimum Rail Height, Longitudinal Barrier, AASHTO Design Load, Finite Element Analysis, LS-DYNA, Vehicle Stability, Single Unit Truck, Modeling, Simulation, Design, Design Load	18. Distribution Statement No restrictions. This document is available to the public through NTIS: National Technical Information Service Alexandria, Virginia 22312 http://www.ntis.gov

19. Security Classif. (of this report) Unclassified	20. Security Classif. (of this page) Unclassified	21. No. of Pages 68	22. Price

Form DOT F 1700.7 (8-72) **Reproduction of completed page authorized**

Inactive

CHAPTER 3. CRASH TEST SYSTEM DETAILS

3.1 TEST ARTICLE DESIGN AND CONSTRUCTION

The test article was comprised of a single-slope rigid concrete barrier, also known as the TxDOT Single-Slope Traffic Rail (SSTR). The total length of the barrier was 150 ft. A length of 78 ft of rail was cast in place on top of an 8-inch thick concrete bridge deck cantilever. The remaining 72 ft of rail were cast on top of a 12-inch thick, 30-inch wide moment slab.

The single slope barrier was constructed with an 11-degree slope on the traffic-side face. The field side of the barrier was vertical. The barrier was 13 inches wide at the base and 7.5 inches wide at the top. The overall height of the barrier was 36 inches.

The barrier was reinforced using welded wire reinforcement. The reinforcement was comprised of 0.375-inch diameter stirrups that were bent to approximately match the profile of the barrier. The stirrups were spaced 6 inches apart over the 78-ft long bridge deck. The spacing was increased to 24 inches over the first 24 ft of rail attached to the moment slab, and then further increased to 36 inches over the last 45 ft of rail. The stirrups were welded to 10 longitudinal wires that were 0.4 inches in diameter and evenly spaced along the height of the barrier.

The 78-ft long, 8-inch thick bridge deck was reinforced with a top and bottom rebar mat. The top mat was comprised of 0.625-inch diameter (#5) transverse bars that were spaced 6 inches apart and tied to three #4 longitudinal rebars. The longitudinal rebars were spaced 9 inches apart laterally. The bottom mat was comprised of 0.625-inch diameter (#5) transverse bars spaced 18 inches apart and tied to three #5 longitudinal rebars. The bridge deck was cantilevered from an existing footing adjacent to a concrete apron. The transverse bars of the top and bottom mat in the bridge deck cantilever were welded to steel straps extending from the existing concrete footing.

The 72-ft long, 12-inch thick, 30-inch wide moment slab was reinforced using the same reinforcement scheme as the bridge deck. The slab was cast in place after excavating native soil adjacent to the concrete apron and then back-filling with compacted crushed limestone road base.

At the location of each vertical stirrup in the single-slope barrier, a 0.5-inch diameter (#4) U-shaped deck stirrup was used to connect the barrier to the underlying deck or moment slab. The U-shaped stirrup was tied to the bottom reinforcement mat of the bridge deck or moment slab and extended beyond the deck/moment slab surface.

Figures 3.1 through 3.3 show the details of the test article, Figure 3.4 has the photographs of the installation.

Inactive

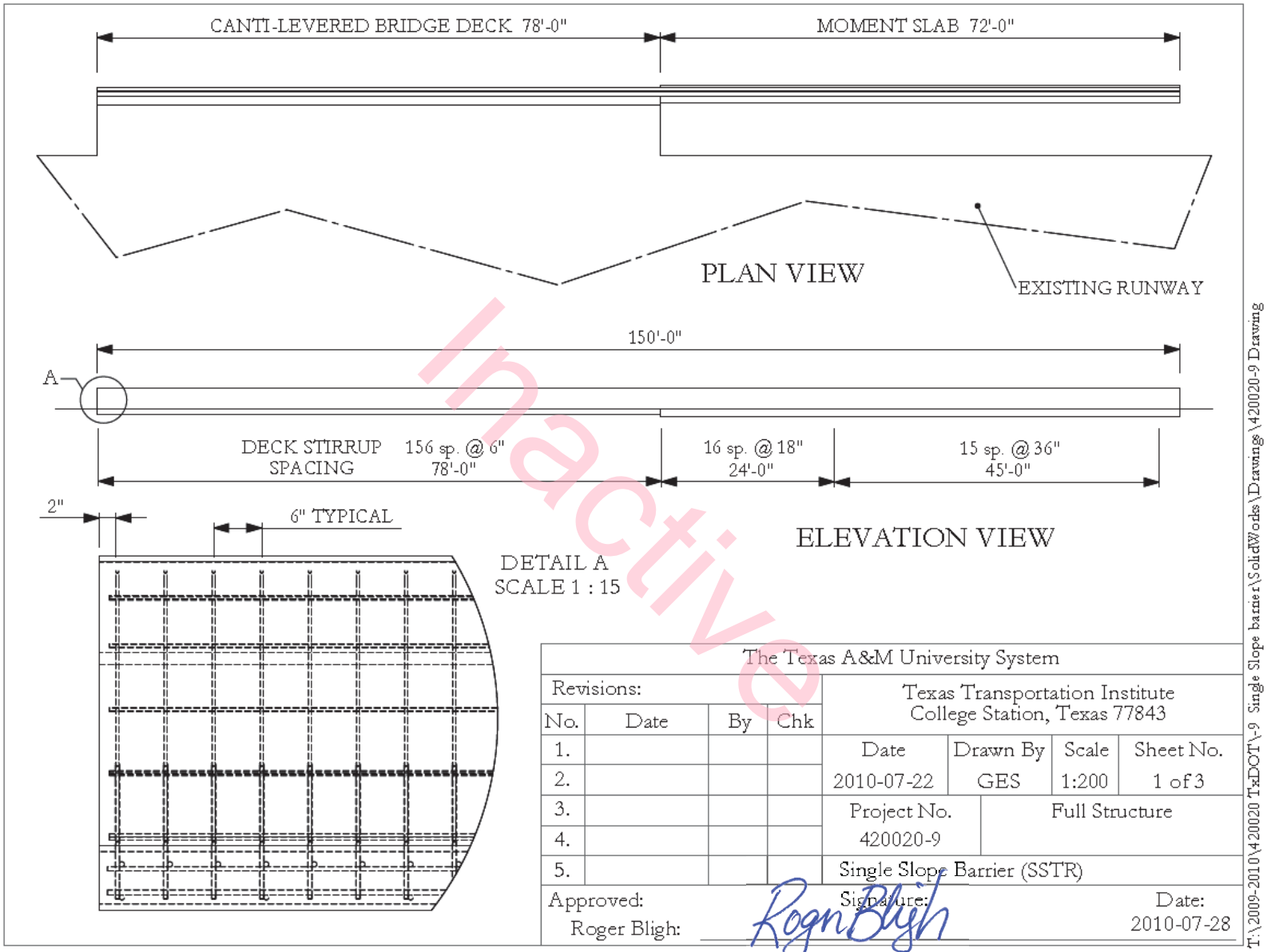

Figure 3.1. Layout of the TxDOT Single Slope Traffic Railing (SSTR).

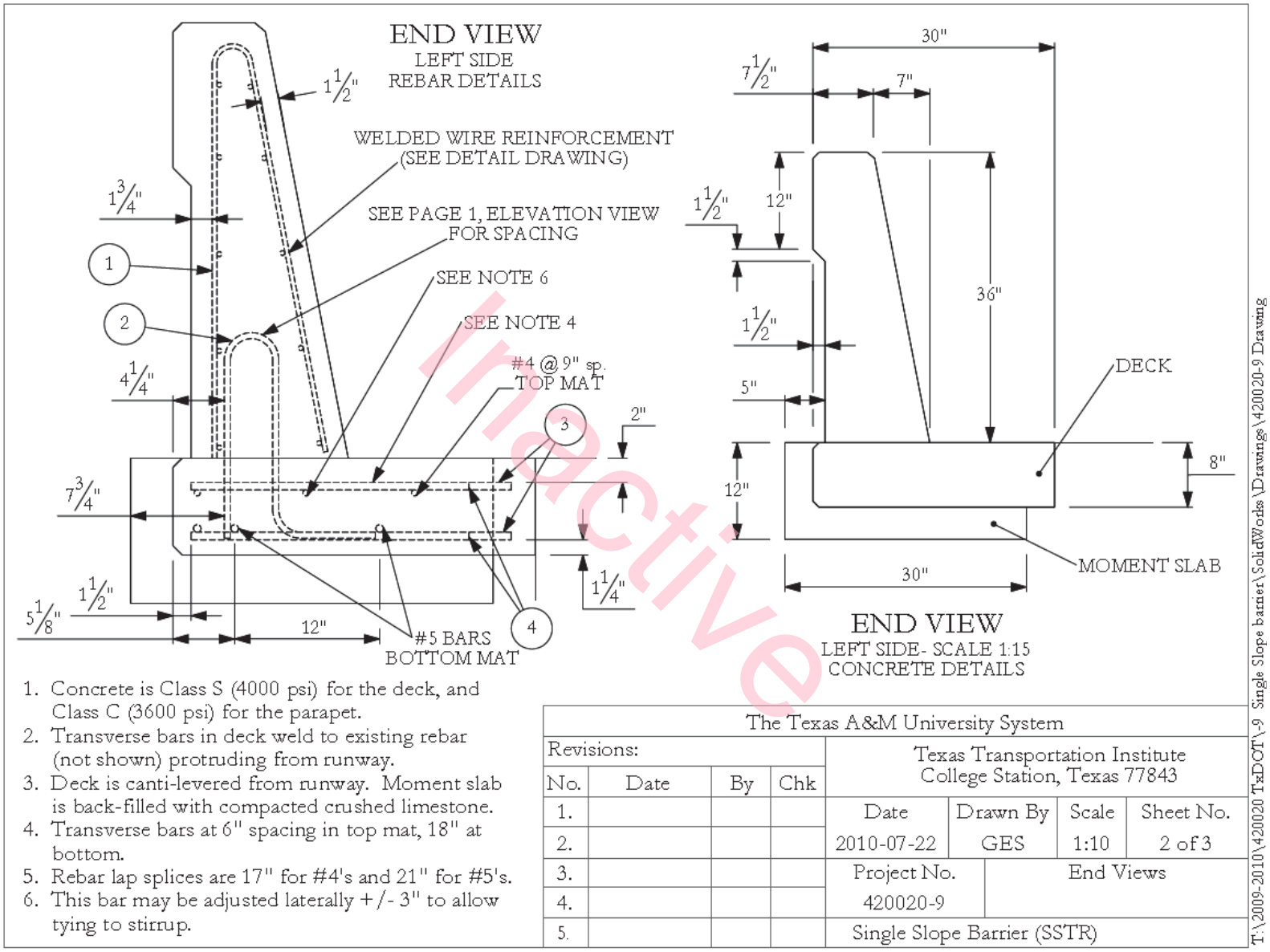

1. Concrete is Class S (4000 psi) for the deck, and Class C (3600 psi) for the parapet.
2. Transverse bars in deck weld to existing rebar (not shown) protruding from runway.
3. Deck is canti-levered from runway. Moment slab is back-filled with compacted crushed limestone.
4. Transverse bars at 6" spacing in top mat, 18" at bottom.
5. Rebar lap splices are 17" for #4's and 21" for #5's.
6. This bar may be adjusted laterally +/- 3" to allow tying to stirrup.

The Texas A&M University System							
Revisions:				Texas Transportation Institute College Station, Texas 77843			
No.	Date	By	Chk	Date	Drawn By	Scale	Sheet No.
1.				2010-07-22	GES	1:10	2 of 3
2.							
3.				Project No.	End Views		
4.				420020-9			
5.				Single Slope Barrier (SSTR)			

Figure 3.2. Details of the TxDOT Single Slope Traffic Railing (SSTR).

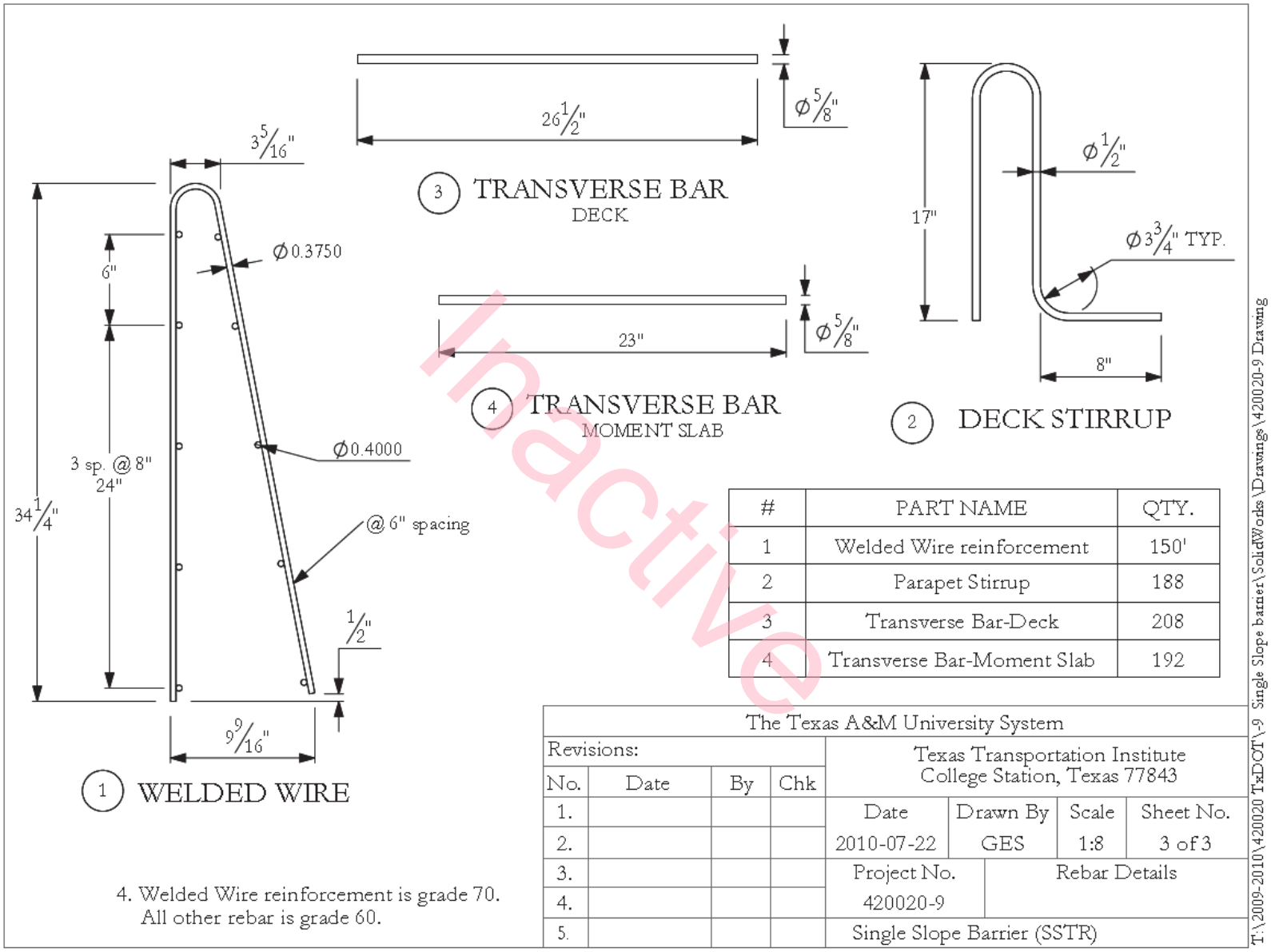

#	PART NAME	QTY.
1	Welded Wire reinforcement	150'
2	Parapet Stirrup	188
3	Transverse Bar-Deck	208
4	Transverse Bar-Moment Slab	192

Figure 3.3. Details of the Reinforcement of the TxDOT Single Slope Traffic Railing (SSTR).