5/26/2017 12:54
C:\Users\D25C0\Desktop\BD.2.7.2.0.05 - Roadside Traffic Signs 05.dgn

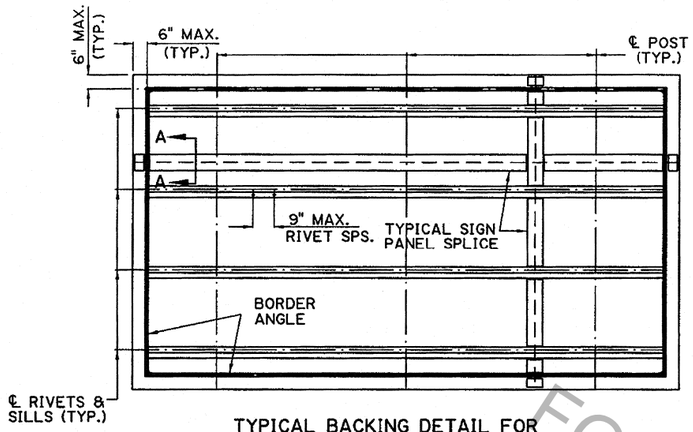

TYPICAL BACKING DETAIL FOR MULTIPLE POST MOUNTS

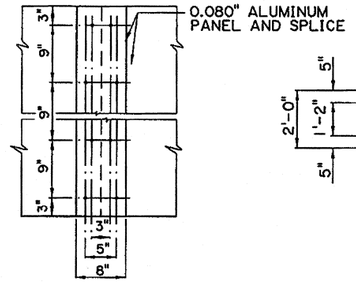

TYPICAL SIGN PANEL SPLICE

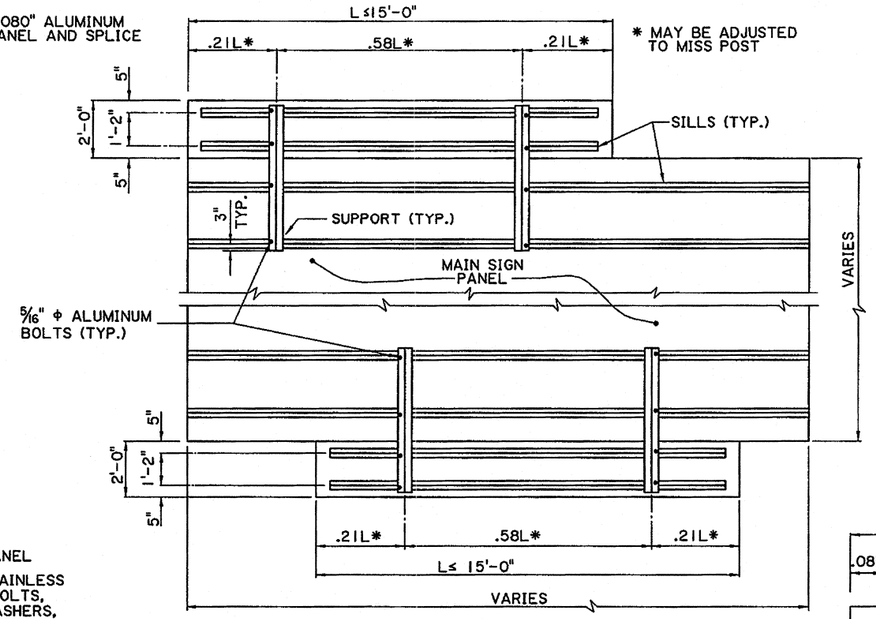

TYPE E SIGN MOUNTING DETAIL

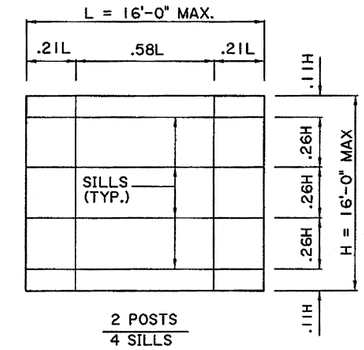

2 POSTS
4 SILLS

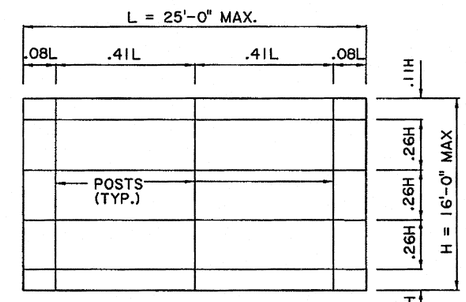

3 POSTS
4 SILLS

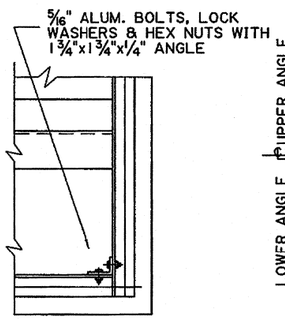

BORDER ANGLE AND SILL CONNECTION

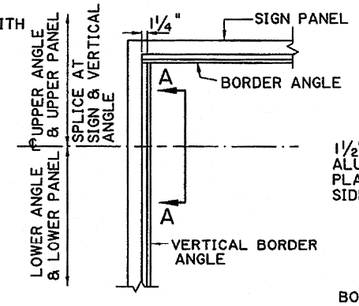

PERMISSABLE BORDER ANGLE SPLICE

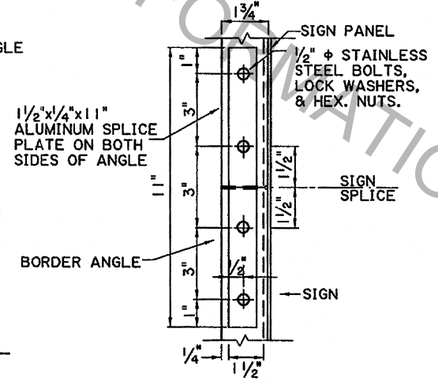

SECTION A-A

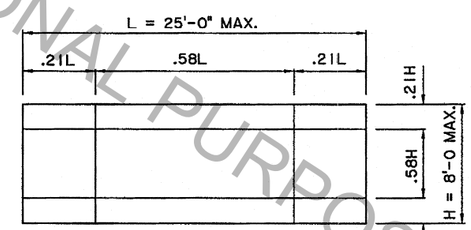

2 POSTS
2 SILLS

NOTE: BOTTOM OF SIGN SHALL BE LEVEL.

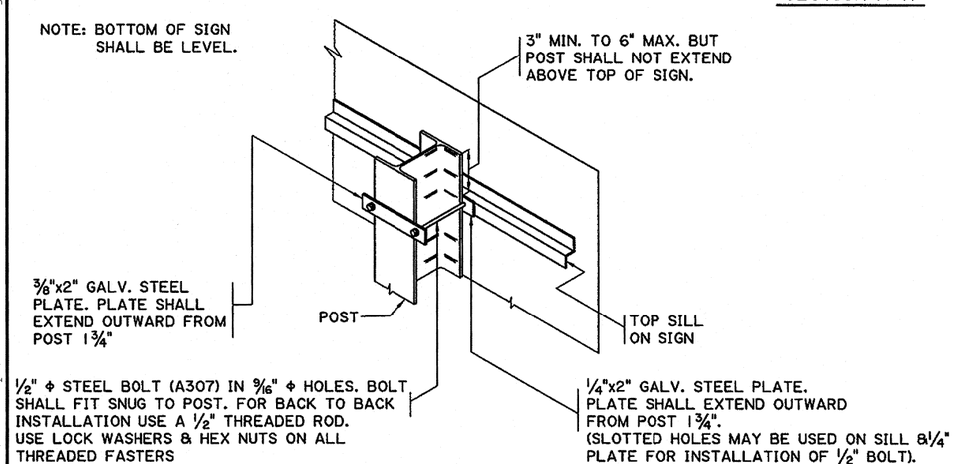

ISOMETRIC VIEW SHOWING METHOD OF ATTACHING SIGN PANEL TO W POST. TYPICAL FOR EACH SILL

(TYPE D OR E SIGN)

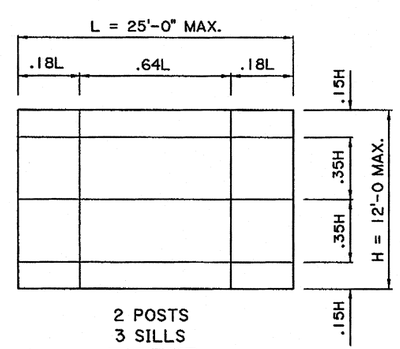

2 POSTS
3 SILLS

SPACING OF POSTS AND SILLS FOR GROUND MOUNTED SIGN INSTALLATIONS

NOTES:

MINIMUM PANEL WIDTH SHALL BE 1'-6".

RECTANGULAR SIGNS WITH VERTICAL BLANK DIMENSIONS 5'-6" OR GREATER SHALL HAVE BORDER ANGLES.

BORDER ANGLES SHALL BE ≤ 1¾"x1¼"x3/16" ALUMINUM. BORDER ANGLES SHALL BE PLACED AS CLOSE TO THE EDGE OF THE PANEL AS PRACTICAL WITH THE LONGER LEG EXTENDED OUTWARD FROM THE PANEL.

SILLS AND SUPPORTS SHALL BE "Z" 3"x2 11/16"x¼" ALUMINUM.

RIVETS SHALL HAVE A 0'-9" MAXIMUM PITCH AND PLACED 0'-1" FROM THE ENDS OF SILLS AND BORDER ANGLES. SPLICE PLATES SHALL NOT EXTEND UNDER PANEL BACKING MEMBERS. THESE PANEL BACKING MEMBERS SHALL NOT BE CUT WITHIN 0'-9" OF THE PANEL SPLICE.

THIS SHEET TO BE USED WITH GENERAL NOTES AND WIND LOAD MAP SHEET.

STATE OF LOUISIANA
PAUL B. FOSSIER, JR.
REG. No. 21028
REGISTERED PROFESSIONAL ENGINEER
IN
CIVIL ENGINEERING

Paul B. Fossier, Jr. 8/31/00

FOR INFORMATIONAL PURPOSES ONLY

SHEET NUMBER

PARISH | FEDERAL PROJECT | STATE PROJECT

DESIGNED J.C. PORTER
CHECKED D. HUVAL
DETAILED E. DANIEL
CHECKED A. BRIDGES
DATE JULY 2000
SHEET 5 OF 11

NO. | DATE | REVISION DESCRIPTION | BY

STATE OF LOUISIANA DEPARTMENT OF TRANSPORTATION AND DEVELOPMENT

PANEL DETAILS
TYPE D & E SIGNS
BD.2.7.2.0.5 - ROADSIDE TRAFFIC SIGNS

BRIDGE AND STRUCTURAL DESIGN