GENERAL NOTES

CONSTRUCTION SPECIFICATIONS: LOUISIANA DEPARTMENT OF TRANSPORTATION AND DEVELOPMENT (LADOTD), OFFICE OF HIGHWAYS, STANDARD SPECIFICATIONS FOR ROADS AND BRIDGES, 2016, EXCEPT AS SUPPLEMENTED OR AMENDED BY THE PLANS, SUPPLEMENTAL SPECIFICATIONS, AND/OR SPECIAL PROVISIONS.

DESIGN SPECIFICATIONS: THE STRUCTURAL DESIGN SHALL BE IN ACCORDANCE WITH AASHTO "STANDARD SPECIFICATIONS FOR STRUCTURAL SUPPORTS FOR HIGHWAY SIGNS, LUMINAIRES, AND TRAFFIC SIGNALS", SIXTH EDITION 2013 AND MEET THE "AMPLIFICATION FACTOR" METHOD FOR DETERMINING STRESSES.

DESIGN WIND SPEED: SEE WIND ZONE MAP FOR LOUISIANA.

WELDING: WELDING SHALL CONFORM TO THE LATEST EDITION OF ANSI/AWS D1.1 (D1.1M) STRUCTURAL WELDING CODE- STEEL. FABRICATOR SHALL NOTIFY LA. DOTD STRUCTURE/ MARINE FABRICATION ENGINEER 10 DAYS PRIOR TO START OF FABRICATION.

HIGH LEVEL LIGHTING TOWER: THE COMPLETE HIGH LEVEL LIGHTING TOWER ASSEMBLY SHALL INCLUDE A TAPERED TUBULAR STEEL POLE (WITH AN OCTAGONAL, DODECAGONAL, HEXDECAGONAL, ROUND OR OTHER CROSS-SECTIONAL SHAPE AT THE CONTRACTOR'S OPTION), BOTTOM SLEEVE, BASE PLATE, WINCH SUPPORT, AND ANCHOR BOLTS COMPLETE, AS SHOWN ON THE PLANS. FOR WIND SPEED OF 130 MPH, USE ROUND SHAPED POLE ONLY (MAXIMUM HEIGHT IS 130 FEET).

PAYMENT: REFER TO SECTION 822 "ELECTRICAL SYSTEMS" OF LADOTD STANDARD SPECIFICATIONS FOR ROADS AND BRIDGES, 2016, FOR ADDITIONAL MATERIALS, MEASUREMENT, AND PAY ITEM REQUIREMENTS.

POLE: HIGH STRENGTH LOW ALLOY STEEL WITH 55,000 PSI MINIMUM YIELD STRENGTH AS PER ASTM A572 OR ASTM A595 WITH LIMIT ON MAXIMUM SILICON CONTENT OF 0.06% AND WALL THICKNESS FROM 0.171" TO 3/8" INCLUSIVE.
POLE SECTIONS WITH MINIMUM WALL THICKNESS OF 5/16" OR MORE MAY BE FABRICATED WITH TWO (2) PLIES TIGHTLY FITTED TOGETHER TO FORM DESIRED WALL THICKNESS.

THE CONTRACTOR SHALL CHECK THE POLE FOR STRAIGHTNESS AFTER ASSEMBLY BUT BEFORE ERECTION AND MAKE ADJUSTMENTS TO CONFORM WITH DIMENSIONS AND TOLERANCES FOR THE ASSEMBLED POLE. POLE DIMENSIONS AND TOLERANCES SHALL CONFORM TO ASTM A500, A501, AND A595.

HANDHOLE SIZE SHALL BE AS REQUIRED FOR LOWERING DEVICE. SECTION AT HANDHOLE TO BE REINFORCED TO HAVE EQUIVALENT SECTION MODULUS AS THE SECTION WITHOUT THE HOLE. HANDHOLE COVER IS TO BE HINGED WITH PRO-VISIONS FOR LOCKING.

POLE SHALL HAVE NOT MORE THAN TWO (2) LONGITUDINAL SEAM BUTT WELDS WITH 60% MINIMUM PENETRATION AND GROUND SMOOTH. FULL PENETRATION OF THE LONGITUDINAL SEAM WELD IS REQUIRED FOR BOTH SECTIONS WITHIN 6" OF ANY HORIZONTAL SPLICE LIMITS. HORIZONTAL SPLICE MAY BE EITHER A FRICTION SPLICE WITH MINIMUM OVERLAP LENGTH OF 1-1/2 x INSIDE DIAMETER OF FEMALE END OF SHAFT SECTION, OR CIRCUMFERENTIAL BUTT WELDED SPLICE WITH FULL PENETRATION AND GROUND SMOOTH. FRICTION TYPE SHALL HAVE A 1/2" DIA. HOLE LOCATED ON THE FEMALE END AT THE MINIMUM OVERLAP LENGTH FOR A PERMANENT RECORD OF THE LAP, AND BE SHOP ASSEMBLED BEFORE GALVANIZING TO ENSURE PROPER FIELD ERECTION.

BOTTOM SLEEVE: HIGH STRENGTH LOW ALLOY STEEL WITH 55,000 PSI MINIMUM YIELD STRENGTH AS PER ASTM A572 OR ASTM A595 WITH 3/8" WALL THICKNESS.

BASE PLATE: STEEL WITH 50,000 PSI MINIMUM YIELD STRENGTH AS PER ASTM A572.

WINCH SUPPORT: STEEL AS PER ASTM A709 (GR. 36) (OR APPROVED EQUAL). METHOD TO SUPPORT WINCH MAY VARY FROM THAT SHOWN, SUBJECT TO THE APPROVAL OF THE BRIDGE DESIGN ENGINEER.

ANCHOR BOLTS, NUTS, AND WASHERS: ANCHOR BOLTS SHALL CONFORM TO ASTM F1554 GR 105, HAVING A MINIMUM YIELD STRENGTH OF 105,000 PSI. NUTS SHALL CONFORM TO ASTM A194 GRADE 2H HEAVY HEX OR A563 GRADE DH.
FLAT WASHERS SHALL CONFORM TO ASTM F436 (AASHTO M293). ANCHOR BOLTS SHALL BE FURNISHED IN A PREPOSITIONED ANCHOR BOLT ASSEMBLY (TWO STEEL TEMPLATES REQUIRED). ALL BOLTS (FULL LENGTH), NUTS, WASHERS, AND STEEL TEMPLATES GALVANIZED AFTER FABRICATION IN ACCORDANCE WITH ASTM A153 CLASS C.

LUMINAIRE BRACKET AND ASSEMBLY: THE POLE MANUFACTURER SHALL FURNISH A COMPLETE AND COMPATIBLE LUMINAIRE BRACKET ASSEMBLY SUITABLE FOR MOUNTING REQUIRED SYMMETRICALLY SPACED LUMINAIRES. LOWERING ASSEMBLY MOUNTED ON HIGH MAST LIGHTING TOWER SHALL BE APPROVED BY THE BRIDGE DESIGN ENGINEER. (SEE ELECTRICAL PLANS AND SPECIFICATIONS FOR FURTHER INFORMATION).

SUBMITTAL REQUIREMENT: DESIGN AND DETAILS OF REQUIRED POLE AND BASE PLATE SHALL BE SUBMITTED FOR APPROVAL TO THE BRIDGE DESIGN ENGINEER.

HOT DIP GALVANIZING: AFTER FABRICATION, ALL SURFACES OF THE POLE AND COMPONENT PARTS OF THE HIGH LEVEL LIGHTING TOWER SHALL BE HOT DIP GALVANIZED IN ACCORDANCE WITH ASTM A123. EACH SECTION SHALL BE COMPLETELY IMMERSED IN ONE (1) PASS. DOUBLE DIPPING WILL NOT BE PERMITTED.

REINFORCING STEEL: ALL BARS SHALL BE GRADE 60.

LIGHTING TOWER FOUNDATION: FOUNDATION FOR THE TOWERS SHALL BE DRILLED SHAFTS. CONSTRUCT FOUNDATION ACCORDING TO SECTION 803 OR OTHER APPLICABLE SECTIONS FROM THE STANDARD SPECIFICATIONS.

ANCHOR BOLT ASSEMBLY: LOCATE AND HOLD THE ANCHOR BOLT ASSEMBLY IN FINAL LOCATION PRIOR TO AND DURING PLACING CONCRETE. BOTTOM TEMPLATE SHALL BE DESIGNED TO HAVE THE SAME BOLT CIRCLE, SPACING OF HOLES, AND HOLE SIZE AS THOSE OF THE TOP TEMPLATE BUT IT IS DESIGNED TO ALLOW CONCRETE NOT TO BE TRAPPED. AT CONTRACTOR'S OPTION, TEMPLATE DESIGNS MAY VARY.

NO WELDING IS ALLOWED ON THE ANCHOR BOLTS.

PLUMB: THE HORIZONTAL DISTANCE BETWEEN THE VERTICAL CENTERLINES AT ANY TWO ELEVATIONS SHALL NOT EXCEED 0.25% OF THE VERTICAL DISTANCE BETWEEN THE TWO ELEVATIONS.

NON-DESTRUCTIVE TESTING (NDT) : FULL PENETRATION SEAM WELD REQUIRES 100% NDT, RADIOGRAPHIC TEST (RT) OR ULTRASONIC TEST (UT). FULL PENETRATION GROOVE WELD BETWEEN BASE PLATE AND HIGH-MAST LIGHTING POLE REQUIRES 100% UT. FULL PENETRATION GROOVE AND FILLET WELD BETWEEN BASE PLATE AND BOTTOM SLEEVE REQUIRES 100% MAGNETIC PARTICLE TEST (MT). NDT SHALL COMPLY WITH THE LATEST EDITION OF ANSI/ AWS D.1.1 (D1.1M) STRUCTURAL WELDING CODE-STEEL.

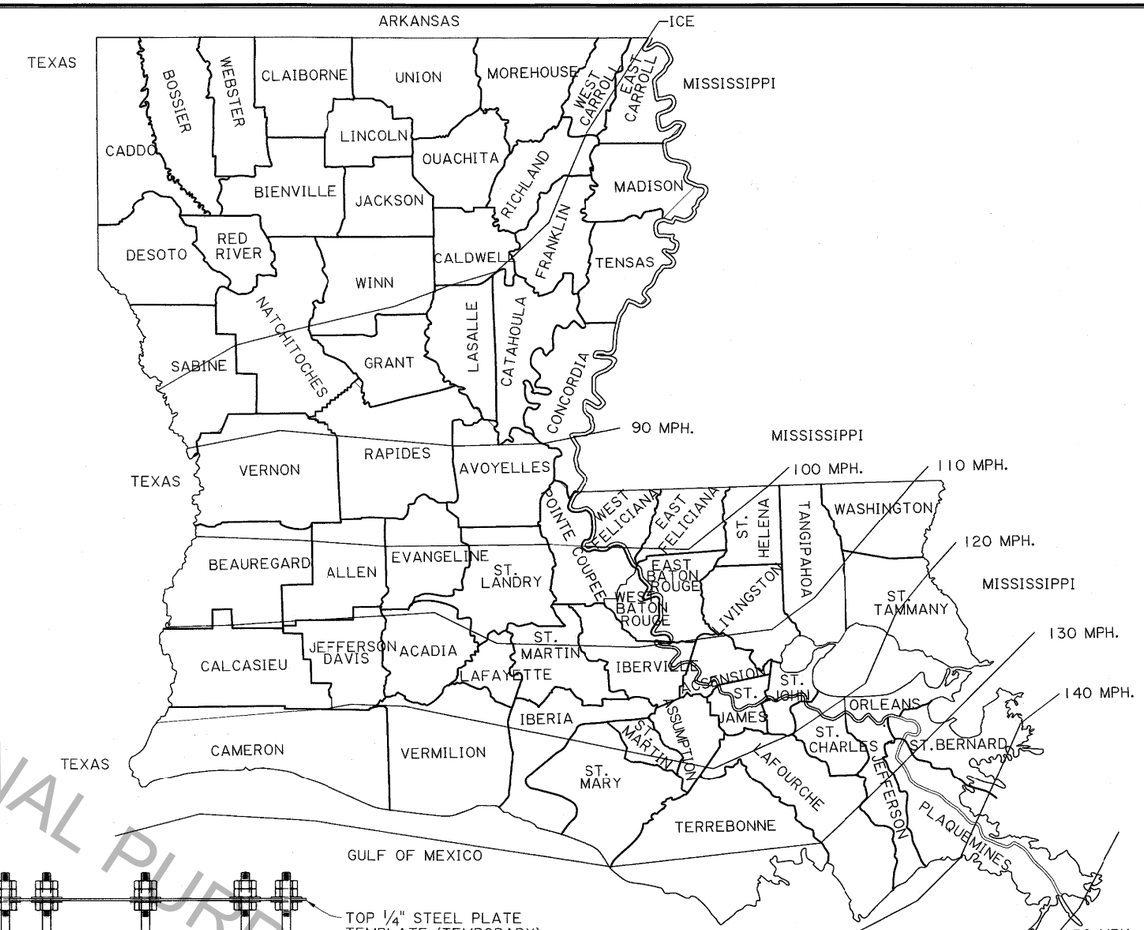

LOUISIANA WIND ZONE MAP
(NOT TO SCALE)

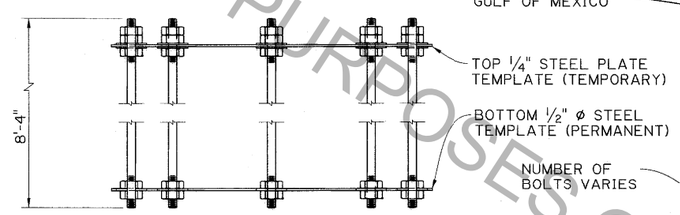

SECTION A-A
ANCHOR BOLT ASSEMBLY
(NOT TO SCALE)

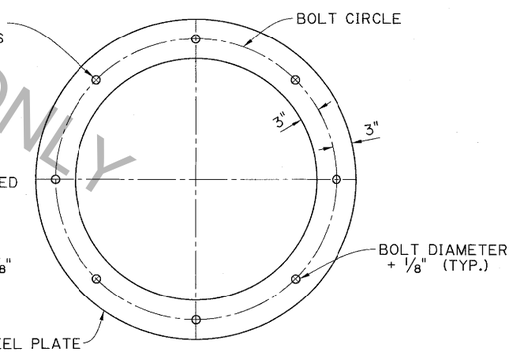

TOP TEMPLATE (TEMPORARY)
(NOT TO SCALE)

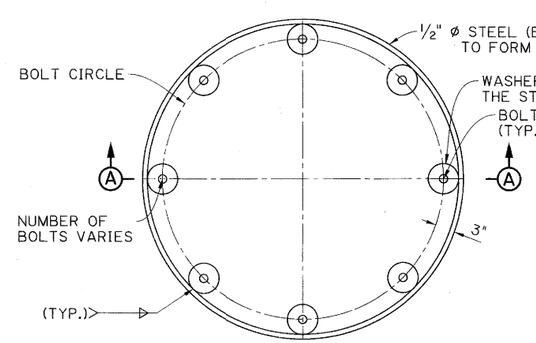

PLAN BOTTOM TEMPLATE (PERMANENT)
(NOT TO SCALE)

STATE OF LOUISIANA
ANANDA H. HERATH
REG. No. 29042
REGISTERED PROFESSIONAL ENGINEER IN CIVIL ENGINEERING

02/14/2017

FOR INFORMATIONAL PURPOSES ONLY

SHEET NUMBER	
PARISH	
CONTROL SECTION	
STATE PROJECT	
DESIGNED A. HERATH	
CHECKED Y. TOURRES	
DETAILED C. OWENS	
CHECKED A. HERATH	
REVIEWED K. BRAUNER	
SERIES # 1 OF 2	

NO.	DATE	REVISION OR CHANGE ORDER DESCRIPTION	BY

GENERAL NOTES, WIND ZONE MAP, & ANCHOR BOLT ASSEMBLY

BD.2.7.4.0.01 - HIGH-MAST LIGHTING

DOTD BRIDGE DESIGN

IP_PWP:d0695341\BD.2.7.4.0.01 - High-Mast Lighting-1.dgn
6/8/2017
08:27