5/26/2017 13:08

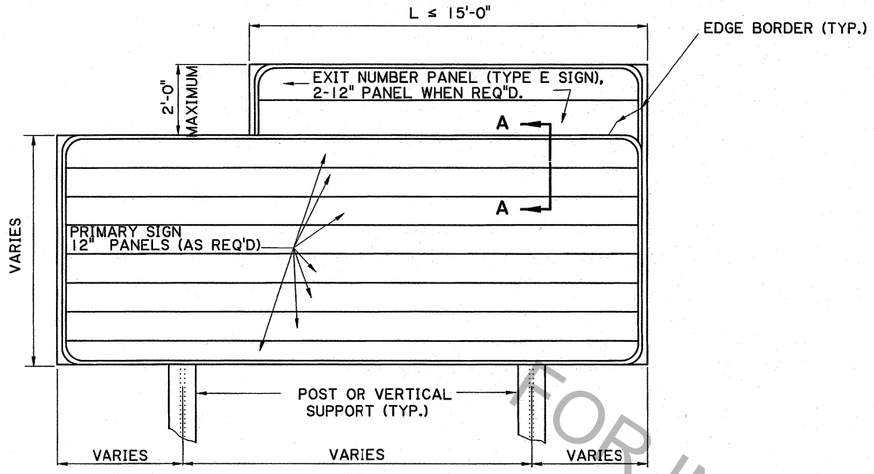

FRONT ELEVATION ⊠

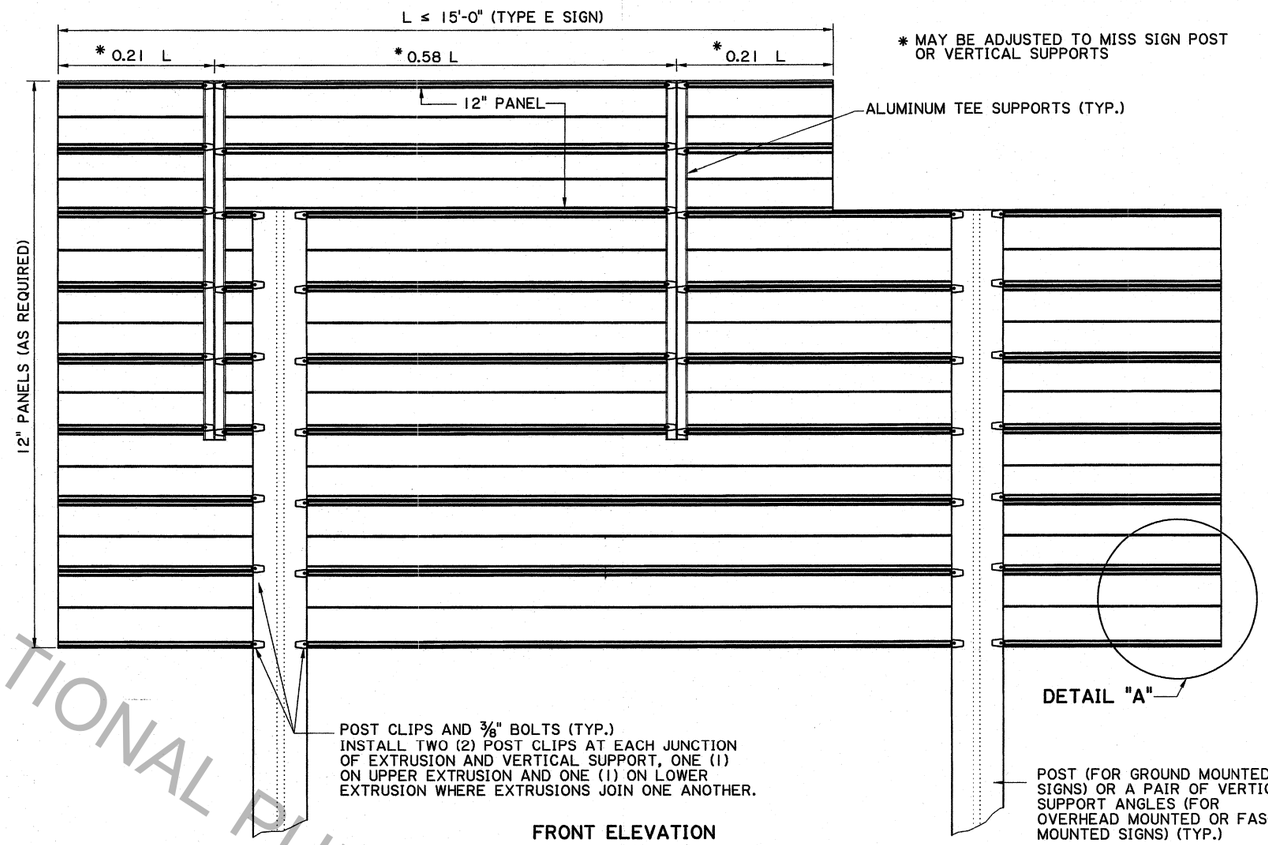

FRONT ELEVATION

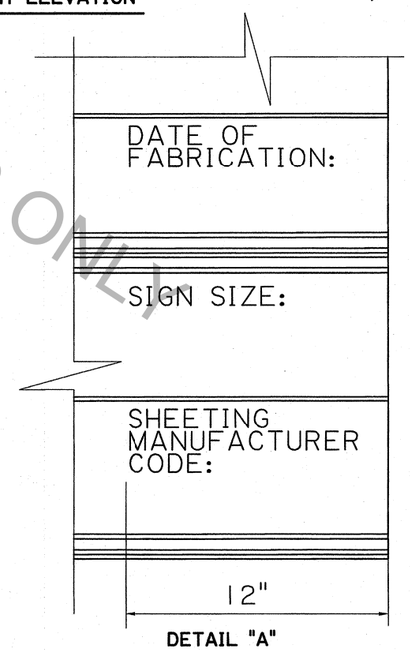

DETAIL "A"

2" LETTERING IN LAST 12" OF SIGN, SEE MISCELLANEOUS NOTE ON GENERAL NOTE SHEET OF TRAFFIC SIGN DETAILS.

NOTES:

1. EXTRUDED ALUMINUM PANELS WILL BE ALLOWED TO BE USED AS AN ALTERNATE TO SIGN PANEL DETAILS FOR TYPE "D" AND "E" GROUND MOUNTED AND OVERHEAD SIGNS ONLY. NUMBER AND SPACING OF POST SHALL MATCH THOSE SHOWN FOR PANEL DETAILS.
2. ALL 12" EXTRUDED ALUMINUM PANELS SHALL BE ALUMINUM ALLOY 6063-T6.
   ALL POST CLIPS SHALL BE ALUMINUM ALLOY 356-T6.
   ALL EXTRUDED PANEL BOLTS AND POST CLIP BOLTS SHALL BE ALUMINUM.
   ALL HEX LOCK NUTS SHALL BE ALUMINUM ALLOY 2017-T4.
   ALL POST CLIP BOLTS SHALL BE TORQUED TO A MINIMUM OF 175 IN.-LBS.
   ALL POST CLIP BOLTS, SHALL HAVE HEADS DESIGNED TO FIT THE BOLT SLOTS IN THE PANELS.
3. TYPE "E" SIGNS SHALL BE ATTACHED TO PRIMARY SIGNS WITH ALUMINUM TEE SUPPORTS, [DOUBLE THE HEIGHT OF THE TYPE "E" SIGN PLUS ONE(1) FOOT ONE(1) INCH FOR LENGTH OF TEE], POST CLIPS, POST CLIP BOLTS, AND HEX LOCK NUTS.
4. FOR NEW OVERHEAD SIGNS (INCLUDING FASCIA MOUNTED) INCORPORATING EXISTING MOUNTS, THE CONTRACTOR WILL PLACE VERTICAL SUPPORT ANGLES WITHOUT SPLICES THAT EXTEND THE FULL HEIGHT OF THE EXTRUDED PRIMARY SIGN PANEL.
5. FOR NEW TYPE D SIGNS INCORPORATING EXISTING MOUNTS, THE EXISTING POST MAY BE REUSED IF THE NEW SIGN PANEL DOES NOT EXTEND OVER 2'-0" ABOVE THE EXISTING POST. SUCH NEW SIGNS WILL BE MOUNTED TO ALUMINUM TEE SUPPORTS BEGINNING AT THE TOP OF THE SIGN AND EXTENDING DOWNWARD FROM THE TOP OF THE POST THE DISTANCE THE NEW SIGN IS ABOVE THE EXISTING POST PLUS 1'-0". ONE TEE IS REQUIRED ADJACENT TO EACH EXISTING POST AND ATTACHED WITH POST CLIPS AS SHOWN FOR NEW TYPE E SIGNS. IF THE NEW SIGN EXTENDS OVER 2'-0" ABOVE THE EXISTING POST, THE CONTRACTOR IS TO REPLACE THE EXISTING POST AND MEET DETAILS FOR NEW CONSTRUCTION.
6. REFLECTIVE SHEETING FOR EXTRUDED PANELS: ONLY SPLICES THAT OCCUR AS PART OF THE MANUFACTURING PROCESS SHALL BE PERMITTED. A MAXIMUM OF TWO VERTICAL SPLICES ON ANY ONE SIGN FABRICATED USING EXTRUDED PANELS, WITH ONE SPLICE PER EXTRUDED PANELS SHALL BE ALLOWED. ALL "EXIT ONLY" PANELS THAT ARE DETAILED WITH THE TOP AND/OR BOTTOM EDGE NOT AT AN EXTRUDED PANEL EDGE SHALL BE FABRICATED FROM 080" ALUMINUM AND ATTACHED AS AN OVERLAY. ALL OTHER "EXIT ONLY" PANELS SHALL BE FABRICATED BY APPLYING THE YELLOW REFLECTIVE SHEETING ON THE EXTRUDED PANELS.
   THE REFLECTIVE SHEETING APPLIED TO EXTRUDED PANELS SHALL EXTEND APPROXIMATELY 1/4" OVER EACH SIDE AND SHALL BE ADHERED TO THE SIDE OF THE PANEL.
7. THIS SHEET TO BE USED WITH WIND LOAD MAP AND GENERAL NOTE SHEET.

⊠ POSSIBLE LOWER MOUNTED TYPE E SIGN NOT SHOWN. WHEN LOWER MOUNT IS REQUIRED, IT SHALL BE CENTERED BETWEEN THE EDGES OF THE MAIN SIGN.

FOR INFORMATIONAL PURPOSES ONLY

STATE OF LOUISIANA
PAUL B. FOSSIER, JR.
REG. No. 21028
REGISTERED PROFESSIONAL ENGINEER IN CIVIL ENGINEERING
8/31/00

SHEET NUMBER	
PARISH	
FEDERAL PROJECT	
STATE PROJECT	
DESIGNED P. FOSSIER	
CHECKED P. FOSSIER	
DETAILED G. GRASS	
CHECKED	
DATE JULY 2000	
SHEET 6 OF 11	

NO.	DATE	REVISION DESCRIPTION	BY

STATE OF LOUISIANA DEPARTMENT OF TRANSPORTATION AND DEVELOPMENT

EXTRUDED ALUMINUM SIGNS

TYPE D & E SIGNS

BD.2.7.2.0.6 - ROADSIDE TRAFFIC SIGNS

BRIDGE AND STRUCTURAL DESIGN

C:\Users\D25C0\Desktop\BD.2.7.2.0.06 - Roadside Traffic Signs 06.dgn