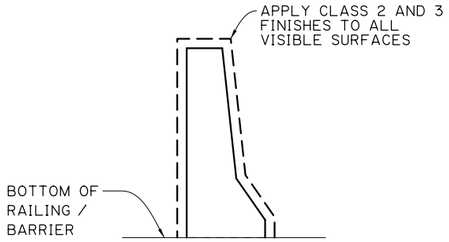

DETAIL 1

NTS

NOTE:
VISIBLE CONCRETE PORTIONS OF HANDRAILING SHALL BE FINISHED WITH A CLASS 2 & CLASS 3 SURFACE FINISH. SEE PLANS FOR DETAILS WHEN THESE COMPONENTS ARE REQUIRED.

BRIDGE RAILING / PERMANENT ROADWAY BARRIER / PIER PROTECTION

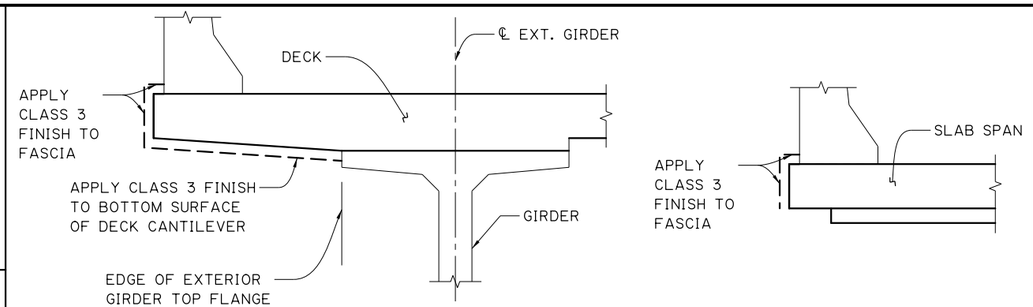

DECK

SLAB

DETAIL 2

NTS

DECK / SLAB

NOTES:

1. DETAILS SHOWN ARE TYPICAL AND FOR ILLUSTRATIVE PURPOSES ONLY. ACTUAL SURFACE SHAPES MAY VARY. REFER TO PROJECT PLANS FOR REQUIRED LOCATION OF SURFACE FINISHES.
2. THE TERM "VISIBLE" USED HEREIN IS TAKEN TO MEAN VISIBLE AFTER CONSTRUCTION IS COMPLETE, FINISHED GROUND LINES ARE IN PLACE, AND WITH RESPECT TO THE WATER SURFACE ELEVATION AT THE TIME OF APPLICATION.

⊗ 3. EXTEND CLASS 3 FINISH TO 1'-0" BELOW FINISHED GROUND LINE.

△ 4. THE "SURFACE FINISH WATER ELEVATION" ▽ IS THE WATER SURFACE ELEVATION AT THE TIME OF CONCRETE SURFACE FINISH APPLICATION. EXTEND SURFACE FINISH TO THIS ELEVATION.

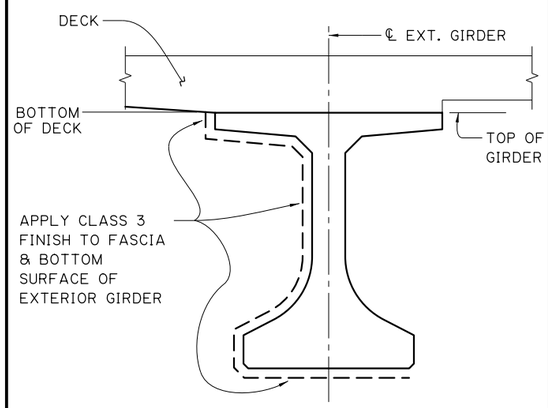

DETAIL 3

NTS

NOTE:
GIRDER TYPE VARIES. LG GIRDER SHOWN FOR ILLUSTRATION PURPOSE ONLY.

EXTERIOR CONCRETE GIRDER

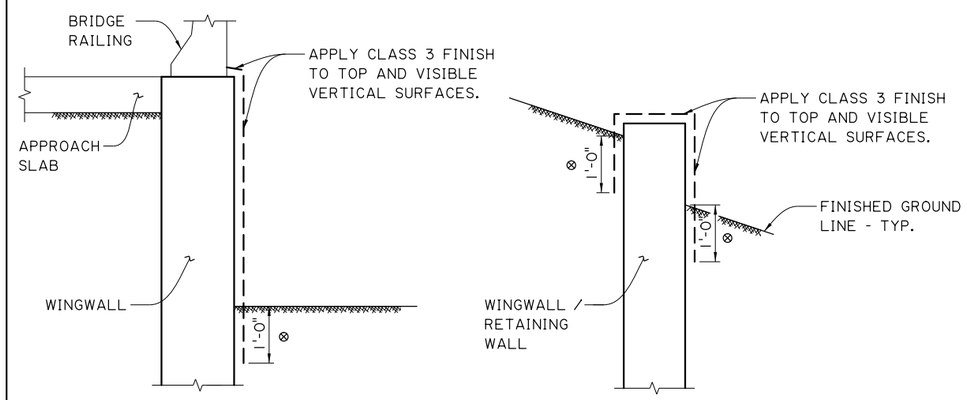

SECTION
WINGWALL PARALLEL TO ROADWAY

SECTION
WINGWALL PERPENDICULAR TO ROADWAY OR CAST-IN-PLACE RETAINING WALL

DETAIL 4

NTS

WINGWALL & CAST-IN-PLACE RETAINING WALL

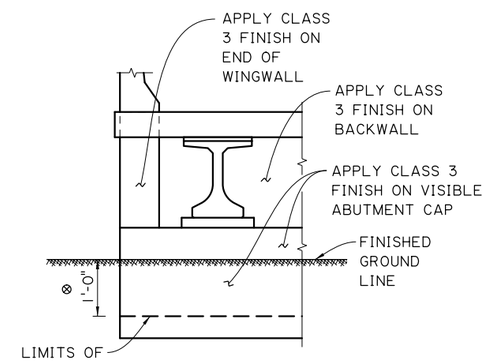

DETAIL 5

NTS

BACKWALL & ABUTMENT CAP

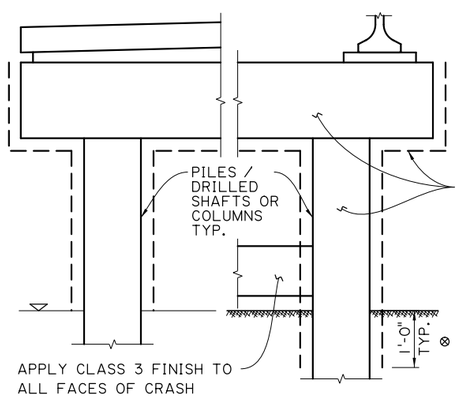

HALF SECTION
SLAB SPAN BRIDGE

HALF SECTION
GIRDER BRIDGE

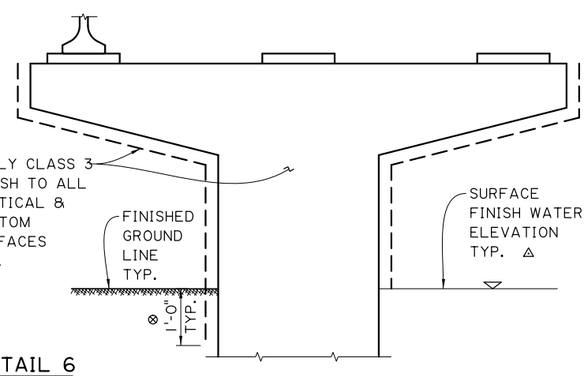

DETAIL 6

NTS

SECTION
HAMMERHEAD BENT

COLUMN BENT, PILE BENT, & HAMMERHEAD BENT

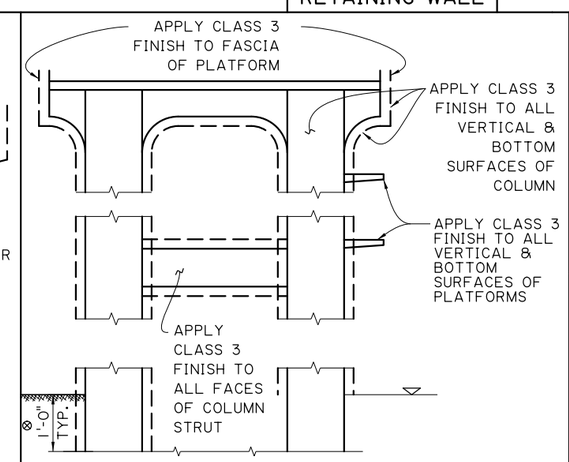

DETAIL 7

NTS

CONCRETE TOWER

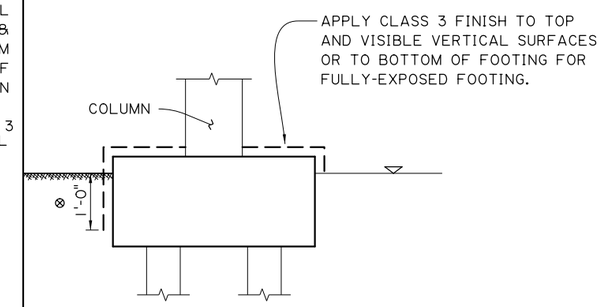

DETAIL 8

NTS

EXPOSED FOOTING

SHEET NUMBER

PARISH | CONTROL SECTION | STATE PROJECT

DESIGN A.LANCASTER
CHECK K. KEMP
DETAIL A. WILLIAMS
CHECK WEI PENG
REVIEW K. KEMP
SERIES # 1 OF 1

APPROVED BY CHIEF ENGINEER:
DATE: 1/06/2026

NO.	DATE	REVISION OR CHANGE ORDER DESCRIPTION	BY

STATE OF LOUISIANA

CONCRETE SURFACE FINISH CLASS 2 & CLASS 3

CSF-01

DOTD LOUISIANA DEPARTMENT OF TRANSPORTATION & DEVELOPMENT

STANDARD PLAN