TECHNICAL PROPOSAL PLANS
5/25/2023 2:35:28 PM
Z:\Shared\1370 - I-10 Calcasieu P3\DWGS\BRIDGE\B6 - EB 110 ramp R9 to Sampson St\B6 - 01_03.dgn

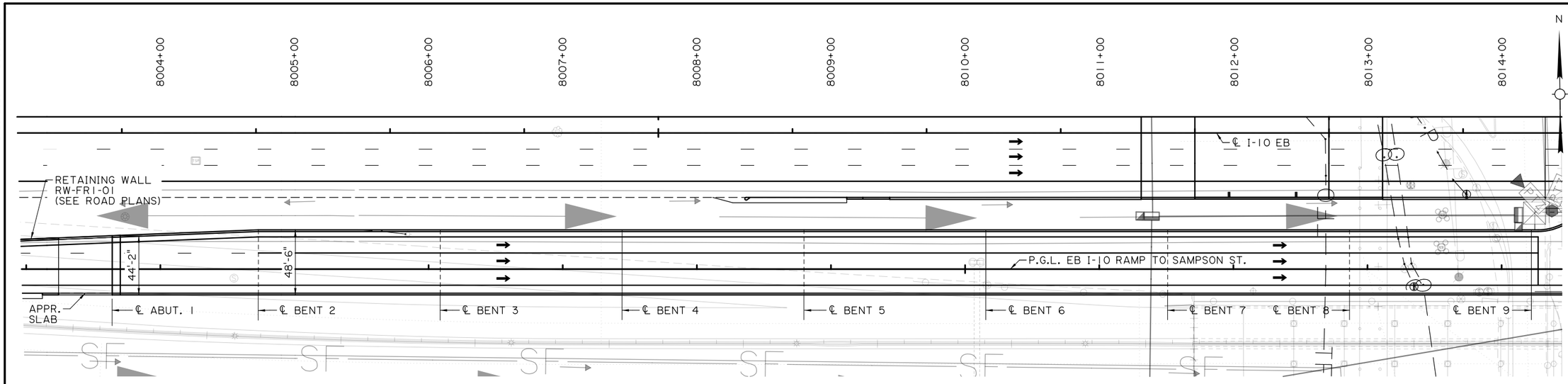

GENERAL PLAN
SCALE: 1" = 40'

300' VERTICAL CURVE
P.V.I. 8006+98.93
ELEV. 38.75
G_1 = 5.00%
G_2 = 0.71%

END ROADWAY
BEGIN BRIDGE
STA. 8003+64.11

END BRIDGE
STA. 8014+22.19

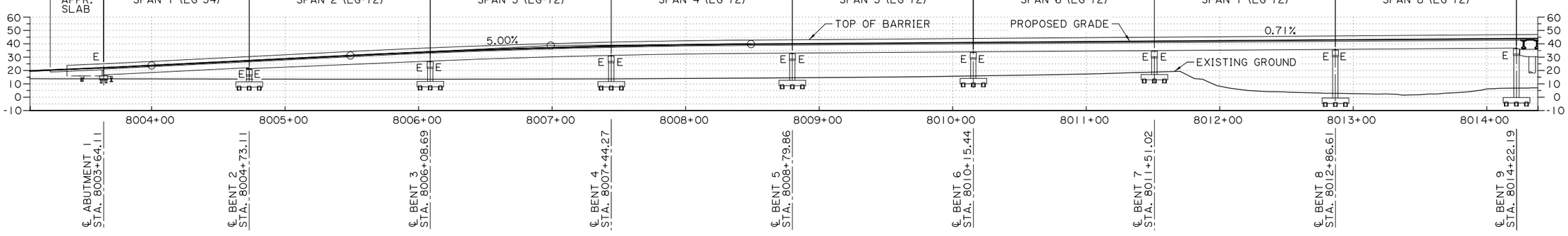

ELEVATION
SCALE: 1" = 40'

SHEET NUMBER 107

PARISH	CONTROL SECTION	STATE PROJECT
CALCASIEU	450-91	H.003931

DESIGN	CHECK	DETAIL	CHECK	REVIEW	SERIES
CRS	CML	KNP	CRS		1 OF 1

TECHNICAL PROPOSAL PLANS
PRELIMINARY
NOT FOR CONSTRUCTION
ENGINEER:
ROBERT M. GRAY
LICENSE #:
45611
DATE:
5/25/23

NO.	DATE	REVISION OR CHANGE ORDER DESCRIPTION	BY

B-6 EB I-10 RAMP R-9 TO SAMPSON STREET
GENERAL PLAN AND ELEVATION
I-10 CALCASIEU RIVER BRIDGE IMPROVEMENTS

DOTD LOUISIANA DEPARTMENT OF TRANSPORTATION & DEVELOPMENT
CBP CALCASIEU BRIDGE PARTNERS

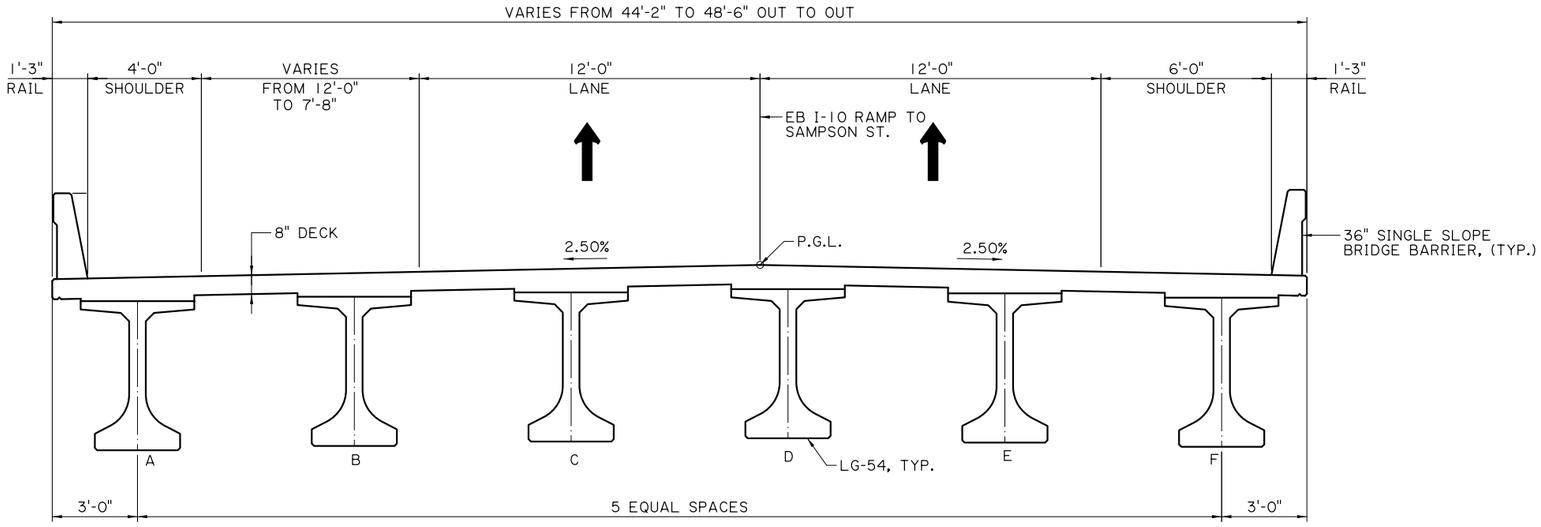

TYPICAL SECTION SPAN 1
SCALE: 3/8" = 1'-0"

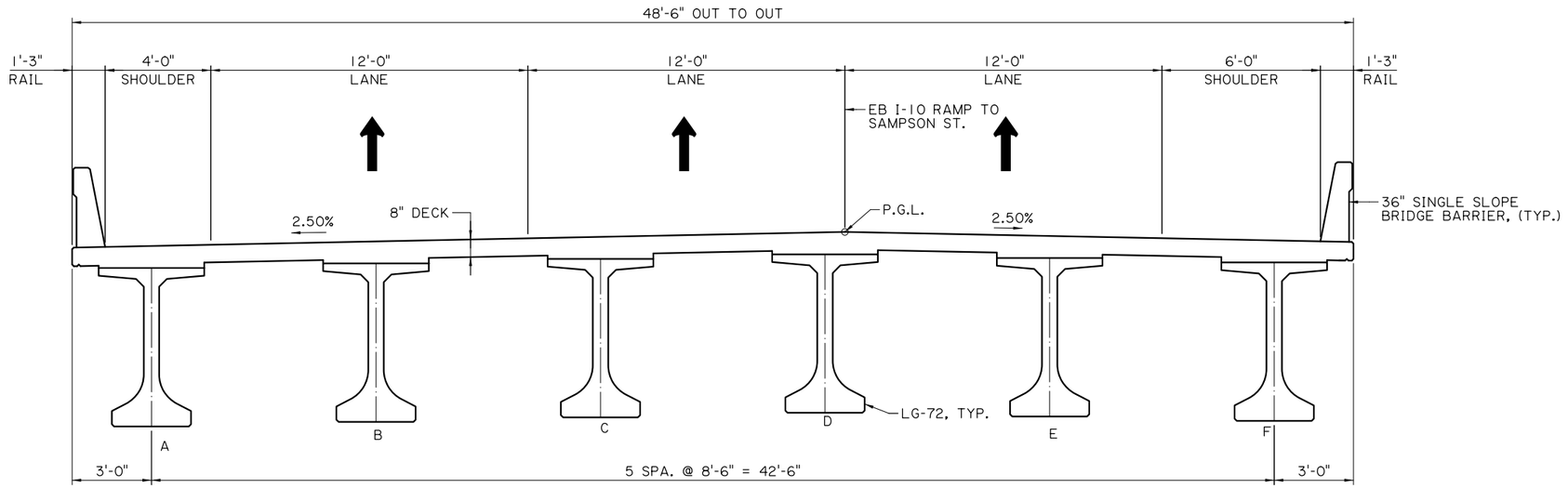

TYPICAL SECTION SPANS 2 THRU 8
SCALE: 3/8" = 1'-0"

NOTE:
SEE DETAILS ON STD. DRAWING "BD.2.6.2.3.01"
FOR 36" SINGLE SLOPE BARRIER RAILING

SHEET NUMBER 108

PARISH	CONTROL SECTION	STATE PROJECT
CALCASIEU	450-91	H.003931

DESIGN	CHECK	DETAIL	CHECK	REVIEW	SERIES
CRS	CML	KNP	CRS		1 OF 1

TECHNICAL PROPOSAL PLANS
PRELIMINARY
NOT FOR CONSTRUCTION
ENGINEER:
ROBERT M. GRAY
LICENSE #:
45611
DATE:
5/25/23

NO.	DATE	REVISION OR CHANGE ORDER DESCRIPTION	BY

B-6 EB I-10 RAMP R-9 TO SAMPSON ST.
TYPICAL SECTIONS
I-10 CALCASIEU RIVER BRIDGE IMPROVEMENTS

DOTD LOUISIANA DEPARTMENT OF TRANSPORTATION & DEVELOPMENT
CBP CALCASIEU BRIDGE PARTNERS

TECHNICAL PROPOSAL PLANS
5/25/2023 2:35:29 PM
Z:\Shared\1370 - I-10 Calcasieu P3\DWGS\BRIDGE\B6 - EB I10 ramp R9 to Sampson St\B6 - 01_03.dgn

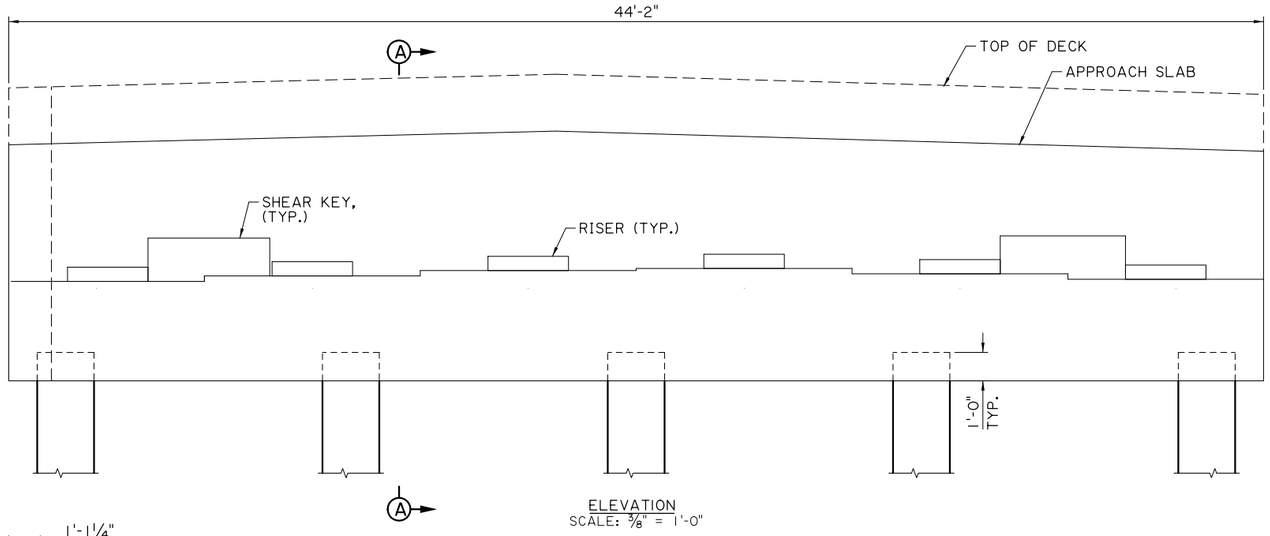

ELEVATION
SCALE: 3/8" = 1'-0"

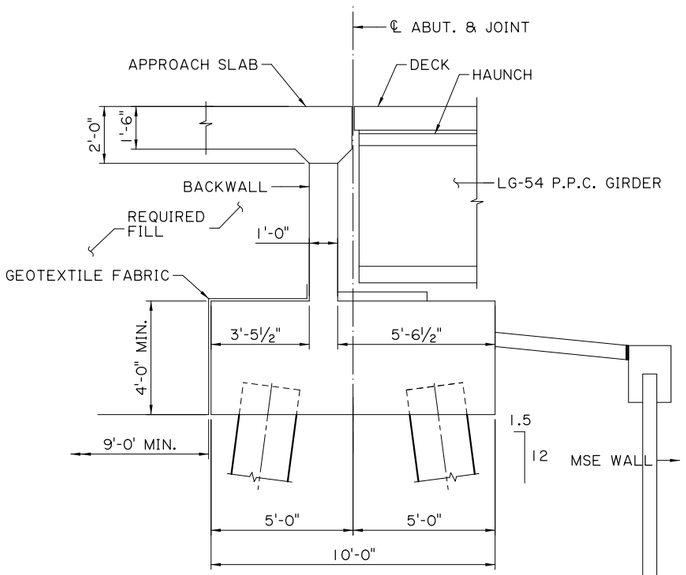

SECTION A-A
SCALE: 3/8" = 1'-0"

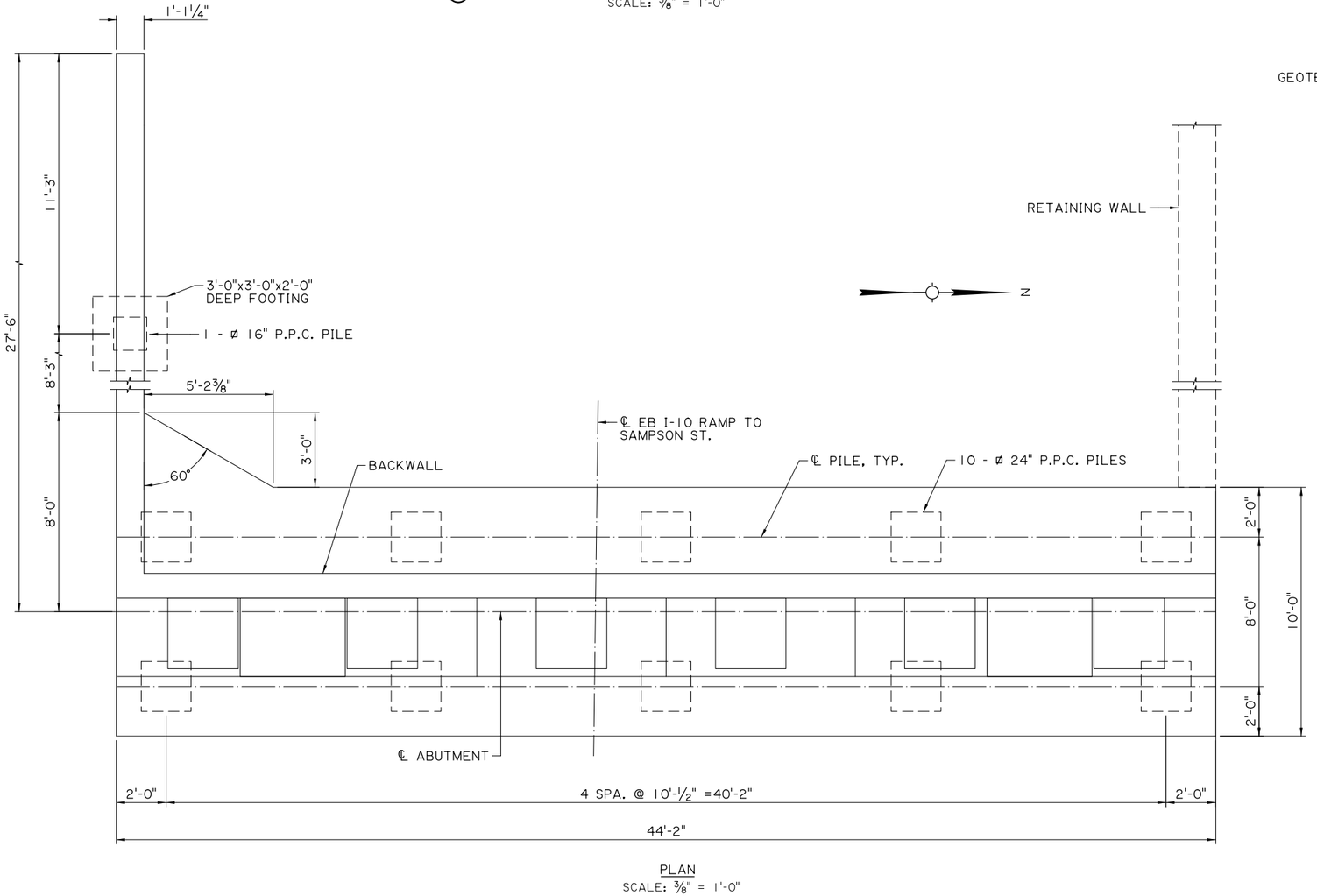

PLAN
SCALE: 3/8" = 1'-0"

TECHNICAL PROPOSAL PLANS

Z:\Shared\1370 - I-10 Calcasieu P3\DWGS\BRIDGE\B6 - EB I10 ramp R9 to Sampson St\B6 - 01_03.dgn
5/25/2023 2:35:29 PM

SHEET NUMBER 109

PARISH	CONTROL SECTION	STATE PROJECT
CALCASIEU	450-91	H.003931

DESIGN	CHECK	DETAIL	CHECK	REVIEW	SERIES #
CRS	CML	KNP	CRS		1 OF 1

TECHNICAL PROPOSAL PLANS
PRELIMINARY
NOT FOR CONSTRUCTION
ENGINEER: ROBERT M. GRAY
LICENSE #: 45611
DATE: 5/25/23

NO.	DATE	REVISION OR CHANGE ORDER DESCRIPTION	BY

B-6 EB I-10 RAMP R-9 TO SAMPSON ST.
ABUTMENT DETAILS

I-10 CALCASIEU RIVER BRIDGE IMPROVEMENTS

LOUISIANA DEPARTMENT OF TRANSPORTATION & DEVELOPMENT

CALCASIEU BRIDGE PARTNERS

BENT DIMENSION	
BENT	"H"
2	9'-4"
3	15'-6"
4	19'-8"
5	20'-7"
6	20'-1"
7	18'-1"
8	34'-11"
9	31'-6"

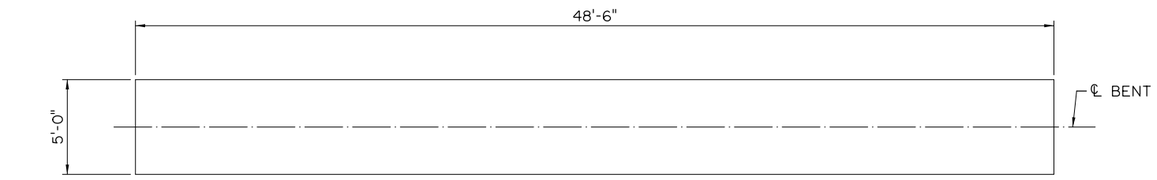

BENT CAP
SCALE: 1/4" = 1'-0"

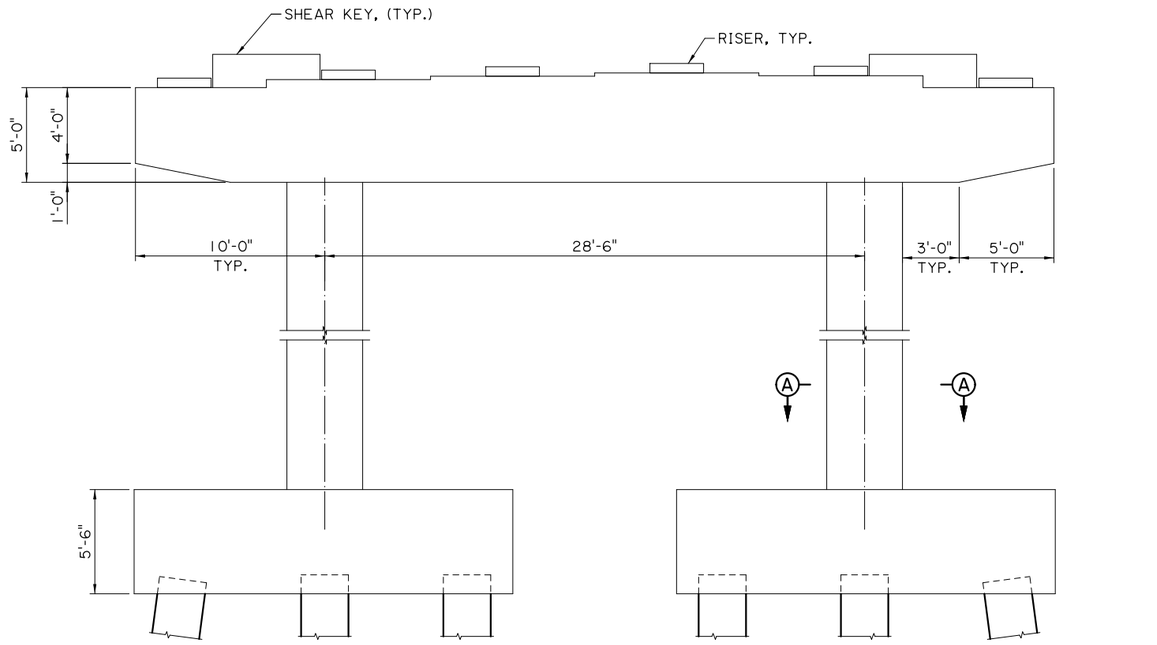

ELEVATION
SCALE: 1/4" = 1'-0"

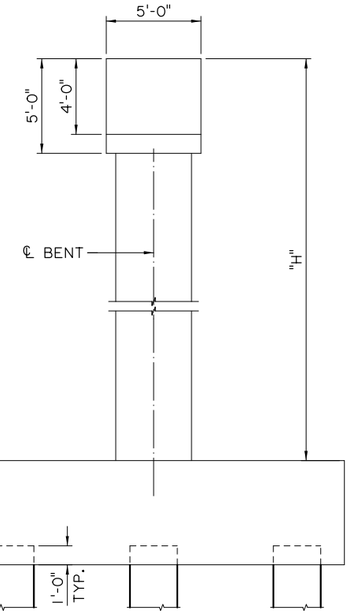

SIDE VIEW
SCALE: 1/4" = 1'-0"

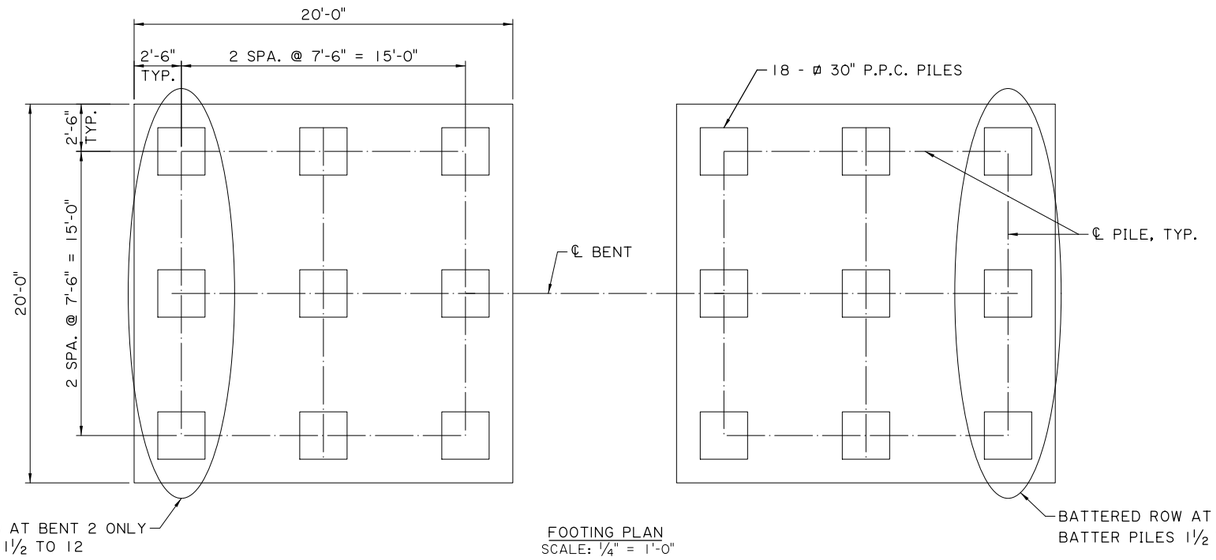

FOOTING PLAN
SCALE: 1/4" = 1'-0"

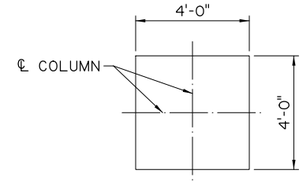

SECTION A-A
SCALE: 3/8" = 1'-0"

SHEET NUMBER 110

PARISH	CONTROL SECTION	STATE PROJECT
CALCASIEU	450-91	H.003931

DESIGN	CHECK	DETAIL	CHECK	REVIEW	SERIES
CRS	CML	KNP	CRS		1 OF 1

TECHNICAL PROPOSAL PLANS
PRELIMINARY
NOT FOR CONSTRUCTION
ENGINEER: ROBERT M. GRAY
LICENSE #: 45611
DATE: 5/25/23

NO.	DATE	REVISION OR CHANGE ORDER DESCRIPTION	BY

B-6 EB I-10 RAMP R-9 TO SAMPSON ST.
BENT DETAILS
I-10 CALCASIEU RIVER BRIDGE IMPROVEMENTS

DOTD LOUISIANA DEPARTMENT OF TRANSPORTATION & DEVELOPMENT
CBP CALCASIEU BRIDGE PARTNERS

TECHNICAL PROPOSAL PLANS
5/25/2023 2:35:29 PM
Z:\Shared\1370 - I-10 Calcasieu P3\DWGS\BRIDGE\B6 - EB I10 ramp R9 to Sampson St\B6 - 01_03.dgn

TECHNICAL PROPOSAL PLANS

5/25/2023 2:37:59 PM

Z:\Shared\1370 - I-10 Calcasieu P3\DWGS\BRIDGE\B7 - Sampson St to WB I10 ramp R10\B7 - 01_02_03.dgn

1510+00 1511+00 1512+00 1513+00 1514+00 9000+00 9001+00 9002+00

HORIZONTAL CURVE
RAMP R-10
P.I. STA. 1510+83.56
△ = 4°37'12" RT.
D = 1°27'57"
T = 157.69'
L = 315.12'
R = 3909.00'

N

EXIST. R/W

RETAINING WALL
RW-R10-02
(SEE ROAD PLANS)

℄ ABUT. 1

P.G.L. SAMPSON ST. TO WB I-10

℄ FRONTAGE ROAD 2

36'-6"

58'-8"

APPR. SLAB

RETAINING WALL
RW-R10-01
(SEE ROAD PLANS)

℄ BENT 2 ℄ BENT 3 ℄ BENT 4 ℄ BENT 5 ℄ BENT 6

P.G.L. I-10 WESTBOUND

℄ PROPOSED I-10

GENERAL PLAN
SCALE: 1" = 30'

210' VERTICAL CURVE
P.V.I. 1512+86.63
ELEV. 39.65
G_1 = 4.57%
G_2 = 1.25%

PROFILE EQ.
P.V.I. 9000+00.00
ELEV. 41.48
P.V.I. 1514+57.85
ELEV. 41.78

END ROADWAY
BEGIN BRIDGE
STA. 1510+23.28

END BRIDGE
STA. 9002+48.63

682'-6" (TOTAL BRIDGE LENGTH)

409'-6" UNIT
3 SIMPLE SPANS WITH CONTINUOUS DECK

273'-0" UNIT
2 SIMPLE SPANS WITH CONTINUOUS DECK

40'-0" APPR. SLAB | 136'-6" SPAN 1 (LG-72) | 136'-6" SPAN 2 (LG-72) | 136'-6" SPAN 3 (LG-72) | 136'-6" SPAN 4 (LG-72) | 136'-6" SPAN 5 (LG-72) | EXP. JT.

TOP OF BARRIER

4.57%

1.25%

PROPOSED GRADE

EXISTING GROUND

60 50 40 30 20 10 0 -10

1509+00 1510+00 1511+00 1512+00 1513+00 1514+00 9000+00 9001+00 9002+00

℄ ABUT. 1
STA. 1510+23.28

℄ BENT 2
STA. 1511+59.78

℄ BENT 3
STA. 1512+96.28

℄ BENT 4
STA. 1514+32.78

℄ BENT 5
STA. 9001+12.13

℄ BENT 6
STA. 9002+48.63

ELEVATION
SCALE: 1" = 30'

SHEET NUMBER	111

PARISH	CONTROL SECTION	STATE PROJECT
CALCASIEU	450-91	H.003931

DESIGN	CHECK	DETAIL	CHECK	REVIEW	SERIES
CRS	CML	KNP	CRS		1 OF 1

TECHNICAL PROPOSAL PLANS
PRELIMINARY
NOT FOR CONSTRUCTION
ENGINEER:
ROBERT M. GRAY
LICENSE #: 45611
DATE: 5/25/23

NO.	DATE	REVISION OR CHANGE ORDER DESCRIPTION	BY

STATE OF LOUISIANA
REGISTERED PROFESSIONAL ENGINEER

B-7 SAMPSON ST. TO WB I-10
AND RAMP R-10
GENERAL PLAN AND ELEVATION

I-10 CALCASIEU RIVER BRIDGE IMPROVEMENTS

DOTD
LOUISIANA DEPARTMENT OF TRANSPORTATION & DEVELOPMENT

CBP
CALCASIEU BRIDGE PARTNERS

TECHNICAL PROPOSAL PLANS
5/25/2023 2:38:00 PM
Z:\Shared\1370 - I-10 Calcasieu P3\DWGS\BRIDGE\B7 - Sampson St to WB I10 ramp R10\B7 - 01_02_03.dgn

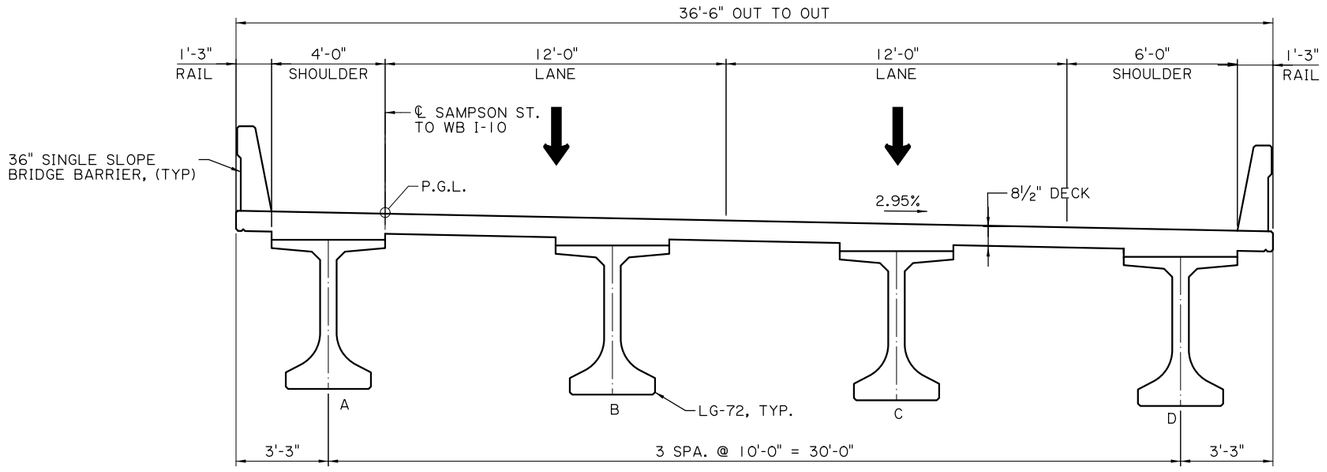

TYPICAL SECTION
SPANS 1 THRU 4
SCALE: ⅜" = 1'-0"

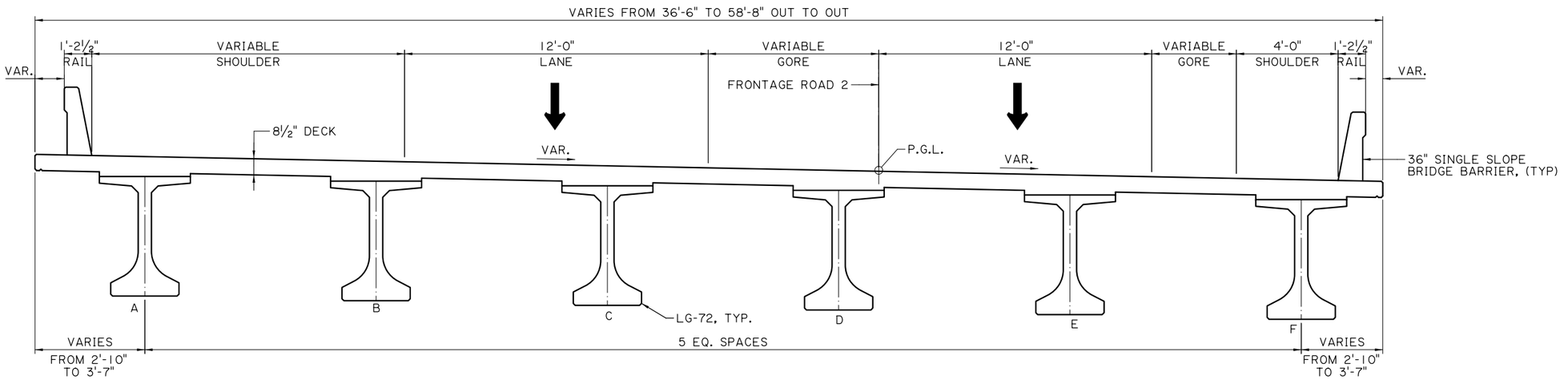

TYPICAL SECTION
SPAN 5
SCALE: ⅜" = 1'-0"

NOTE:
SEE DETAILS ON DRAWING "BD.2.6.2.3.01" FOR 36 IN. SINGLE SLOPE BARRIER RAILING.

SHEET NUMBER 112

PARISH	CONTROL SECTION	STATE PROJECT
CALCASIEU	450-91	H.003931

DESIGN	CHECK	DETAIL	CHECK	REVIEW	SERIES
CRS	CML	KNP	CRS		1 OF 1

TECHNICAL PROPOSAL PLANS
PRELIMINARY
NOT FOR CONSTRUCTION
ENGINEER:
ROBERT M. GRAY
LICENSE #:
45611
DATE:
5/25/23

NO.	DATE	REVISION OR CHANGE ORDER DESCRIPTION	BY

B-7 SAMPSON ST. TO WB I-10 AND RAMP R-10
TYPICAL SECTIONS

I-10 CALCASIEU RIVER BRIDGE IMPROVEMENTS

DOTD LOUISIANA DEPARTMENT OF TRANSPORTATION & DEVELOPMENT
CBP CALCASIEU BRIDGE PARTNERS

TECHNICAL PROPOSAL PLANS
5/25/2023 2:38:00 PM
Z:\Shared\1370 - I-10 Calcasieu P3\DWGS\BRIDGE\B7 - Sampson St to WB I10 ramp R10\B7 - 01_02_03.dgn

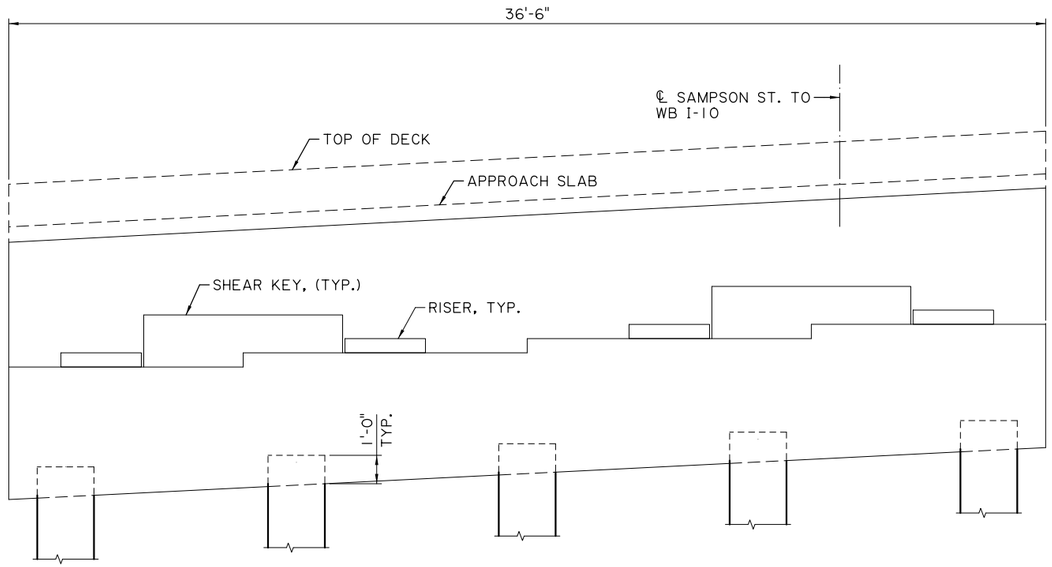

ELEVATION
SCALE: 3/8" = 1'-0"
(LOOKING BACKSTATION)

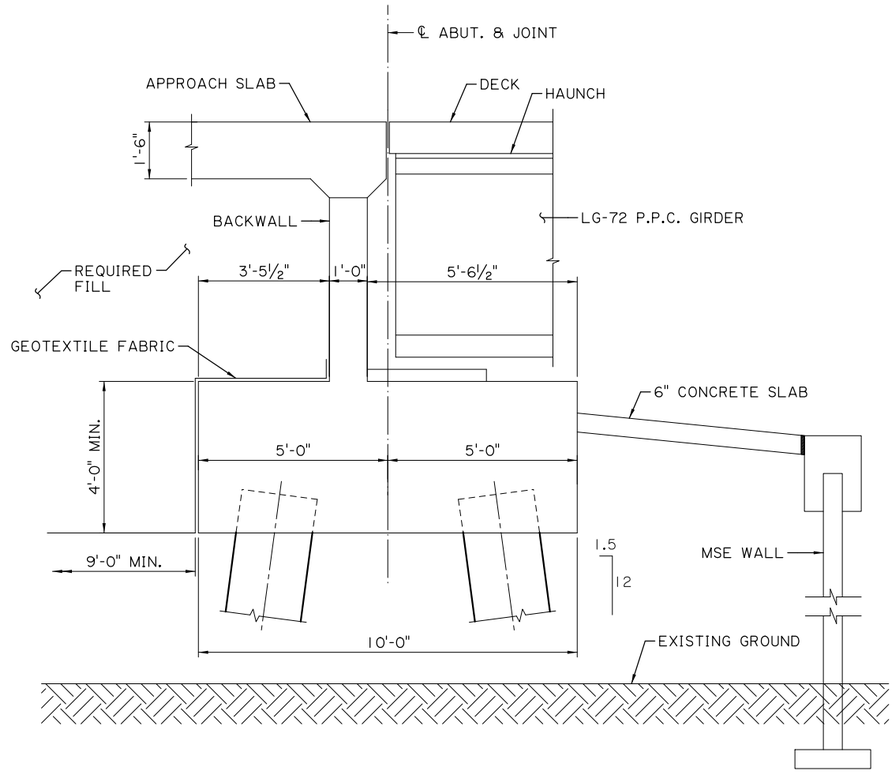

ABUTMENT SECTION
SCALE: ½" = 1'-0"

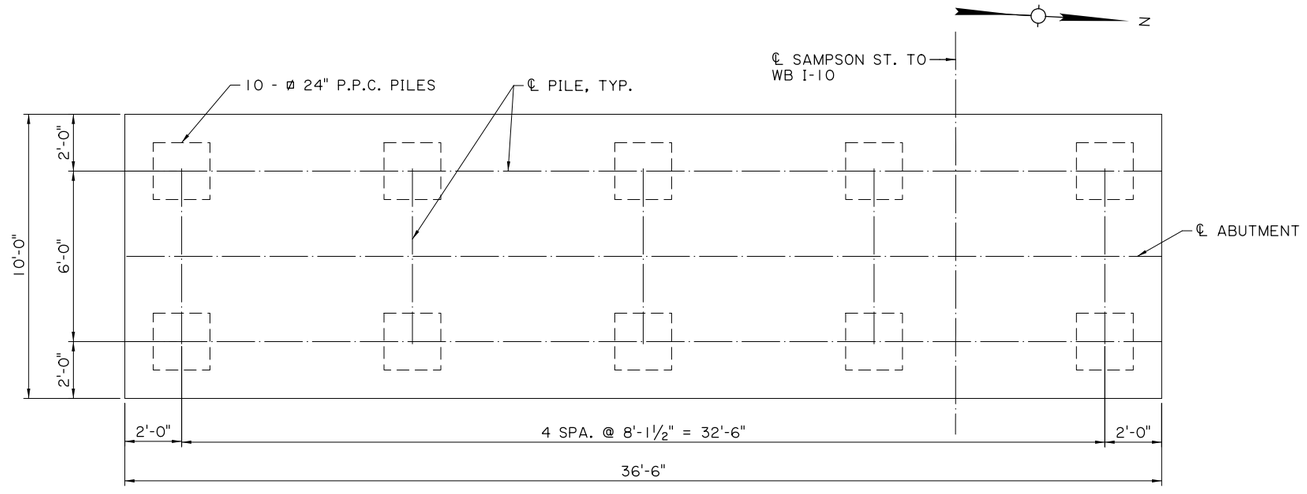

FOOTING PLAN
SCALE: 3/8" = 1'-0"

SHEET NUMBER 113

PARISH	CONTROL SECTION	STATE PROJECT
CALCASIEU	450-91	H.003931

DESIGN	CHECK	DETAIL	CHECK	REVIEW	SERIES
CRS	CML	KNP	CRS		1 OF 1

TECHNICAL PROPOSAL PLANS
PRELIMINARY
NOT FOR CONSTRUCTION
ENGINEER: ROBERT M. GRAY
LICENSE #: 45611
DATE: 5/25/23

NO.	DATE	REVISION OR CHANGE ORDER DESCRIPTION	BY

B-7 SAMPSON ST. TO WB I-10
AND RAMP R-10
ABUTMENT DETAILS

I-10 CALCASIEU RIVER BRIDGE IMPROVEMENTS

DOTD LOUISIANA DEPARTMENT OF TRANSPORTATION & DEVELOPMENT

CBP CALCASIEU BRIDGE PARTNERS

BENT DIMENSIONS	
BENT NO.	"H"
2	18'-5"
3	23'-0"
4	26'-4"
5	32'-3"

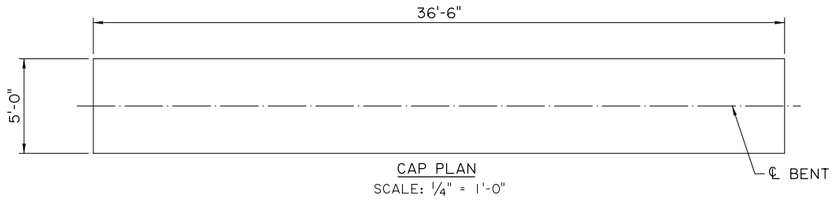

CAP PLAN
SCALE: 1/4" = 1'-0"

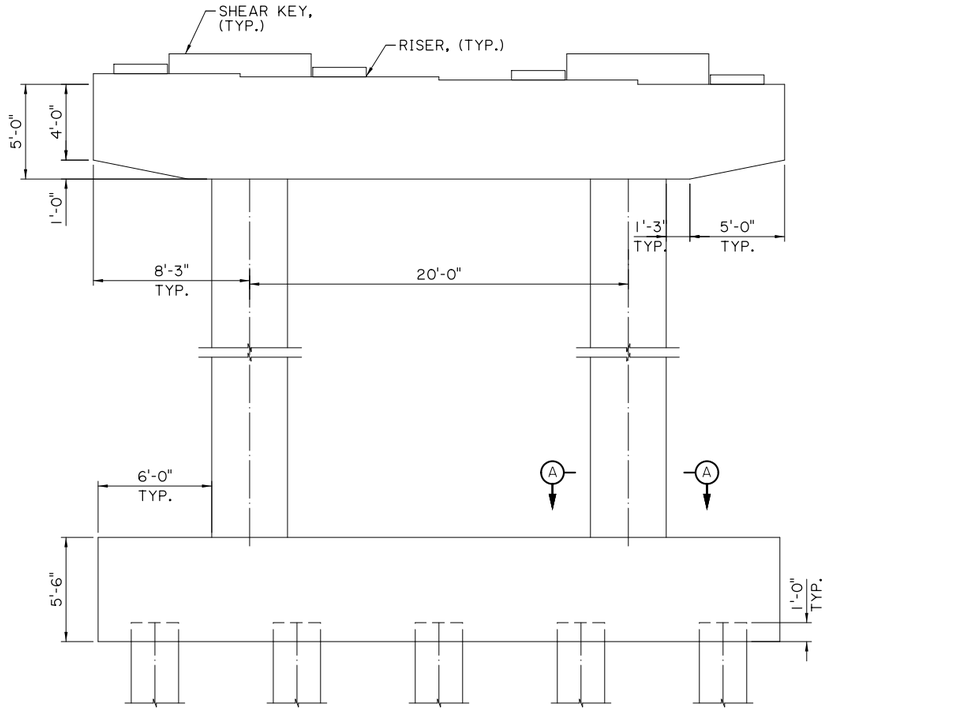

ELEVATION
SCALE: 1/4" = 1'-0"

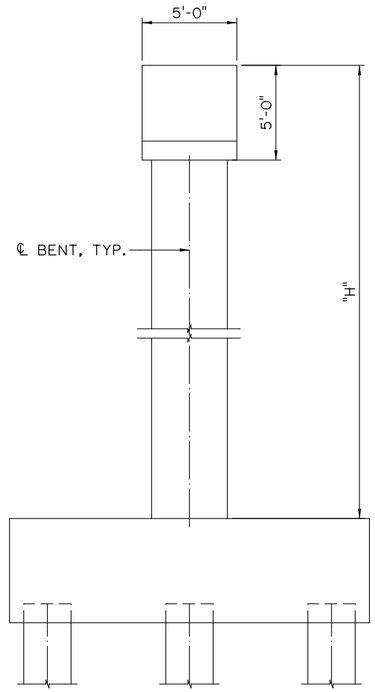

SIDE VIEW
SCALE: 1/4" = 1'-0"

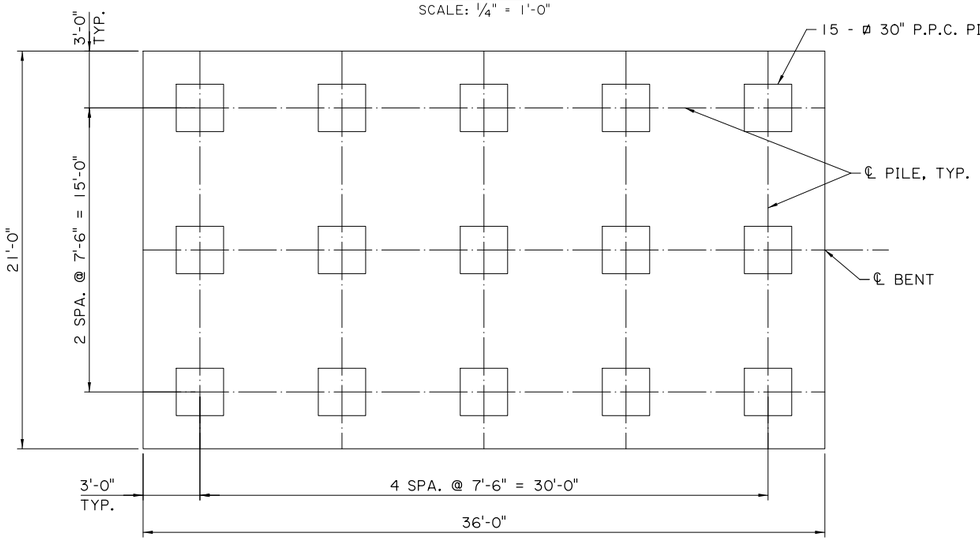

FOOTING PLAN
SCALE: 1/4" = 1'-0"

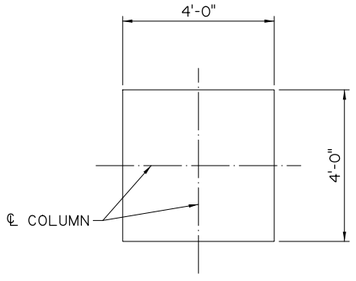

SECTION A-A
SCALE: 1/2" = 1'-0"

SHEET NUMBER 114

PARISH	CONTROL SECTION	STATE PROJECT
CALCASIEU	450-91	H.003931

DESIGN	CHECK	DETAIL	CHECK	REVIEW	SERIES
CRS	CML	KNP	CRS		1 OF 2

TECHNICAL PROPOSAL PLANS
PRELIMINARY
NOT FOR CONSTRUCTION
ENGINEER:
ROBERT M. GRAY
LICENSE #:
45611
DATE:
5/25/23

NO.	DATE	REVISION OR CHANGE ORDER DESCRIPTION	BY

B-7 SAMPSON ST. TO WB I-10 AND RAMP R-10

BENTS 2 THRU 5 DETAILS

I-10 CALCASIEU RIVER BRIDGE IMPROVEMENTS

DOTD LOUISIANA DEPARTMENT OF TRANSPORTATION & DEVELOPMENT

CBP CALCASIEU BRIDGE PARTNERS

TECHNICAL PROPOSAL PLANS

5/25/2023 2:38:01 PM

Z:\Shared\1370 - I-10 Calcasieu P3\DWGS\BRIDGE\B7 - Sampson St to WB I10 ramp R10\B7 - 01_02_03.dgn

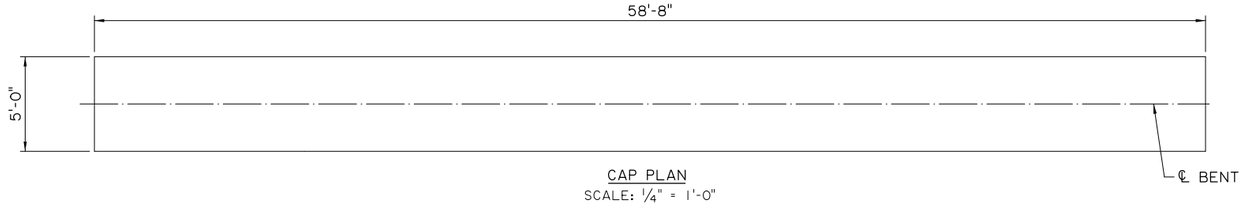

CAP PLAN
SCALE: 1/4" = 1'-0"

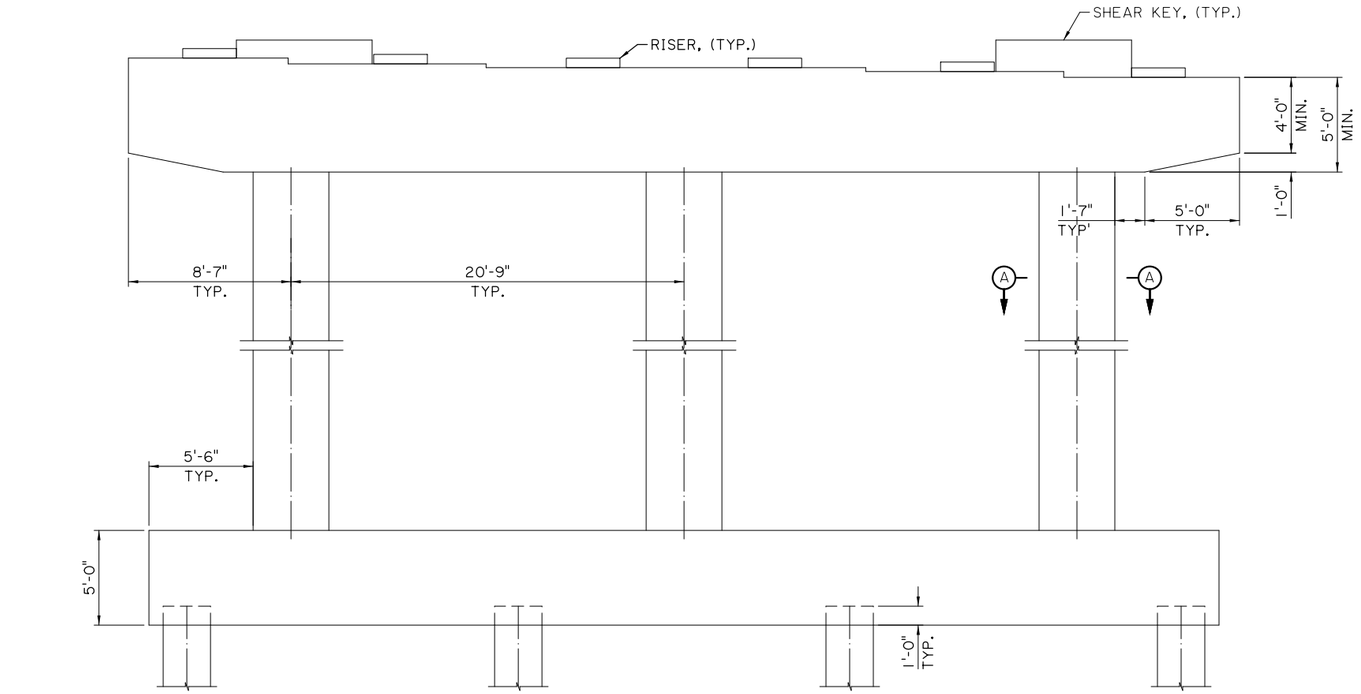

ELEVATION
SCALE: 1/4" = 1'-0"

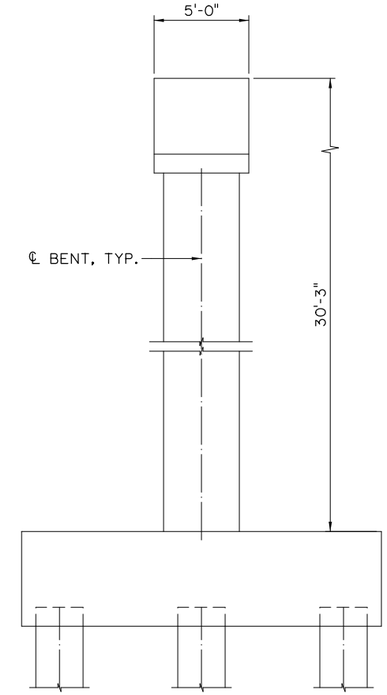

SIDE VIEW
SCALE: 1/4" = 1'-0"

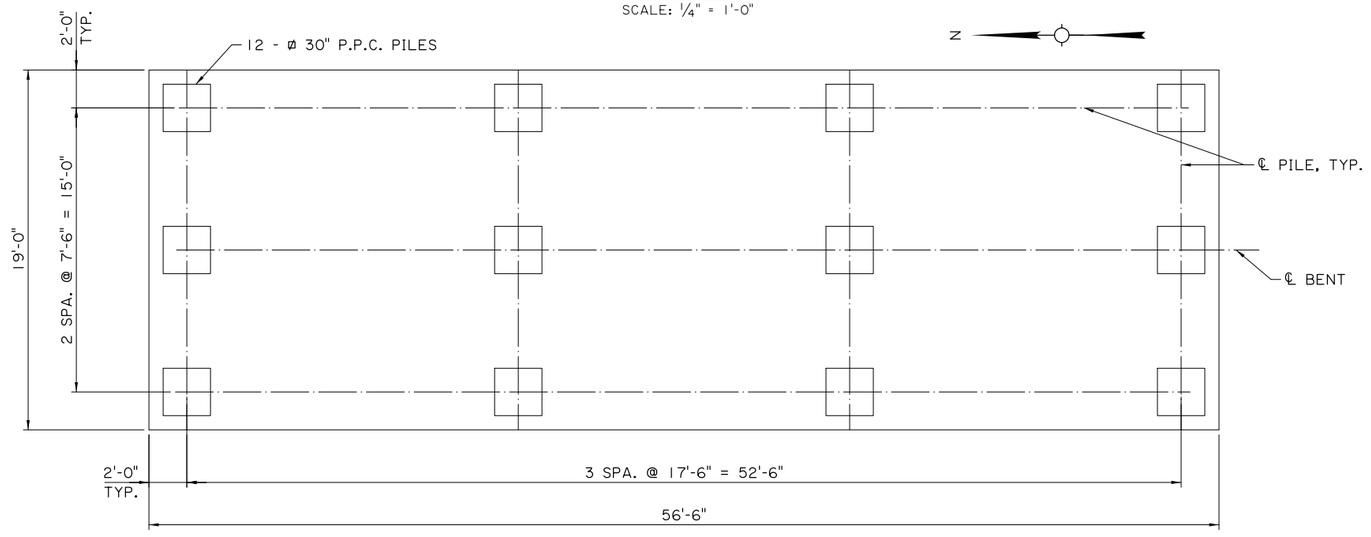

FOOTING PLAN
SCALE: 1/4" = 1'-0"

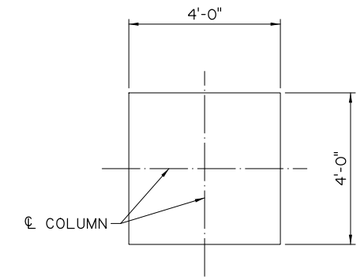

SECTION A-A
SCALE: 1/2" = 1'-0"

TECHNICAL PROPOSAL PLANS

Z:\Shared\1370 - I-10 Calcasieu P3\DWGS\BRIDGE\B7 - Sampson St to WB I10 ramp R10\B7 - 01_02_03.dgn 5/25/2023 2:38:01 PM

SHEET NUMBER 115

PARISH	CONTROL SECTION	STATE PROJECT
CALCASIEU	450-91	H.003931

DESIGN	CHECK	DETAIL	CHECK	REVIEW	SERIES
CRS	CML	KNP	CRS		2 OF 2

TECHNICAL PROPOSAL PLANS

PRELIMINARY
NOT FOR CONSTRUCTION

ENGINEER:
ROBERT M. GRAY

LICENSE #:
45611

DATE:
5/25/23

NO.	DATE	REVISION OR CHANGE ORDER DESCRIPTION	BY

B-7 SAMPSON ST. TO WB I-10 AND RAMP R-10

BENT 6 DETAILS

I-10 CALCASIEU RIVER BRIDGE IMPROVEMENTS

DOTD LOUISIANA DEPARTMENT OF TRANSPORTATION & DEVELOPMENT

CBP CALCASIEU BRIDGE PARTNERS

Z:\Shared\1370 - I-10 Calcasieu P3\DWGS\BRIDGE\B8 - WB I10 ramp R13 to Sampson St over UPRR Spur\B8 - 01_02_03.dgn 5/25/2023 2:40:27 PM

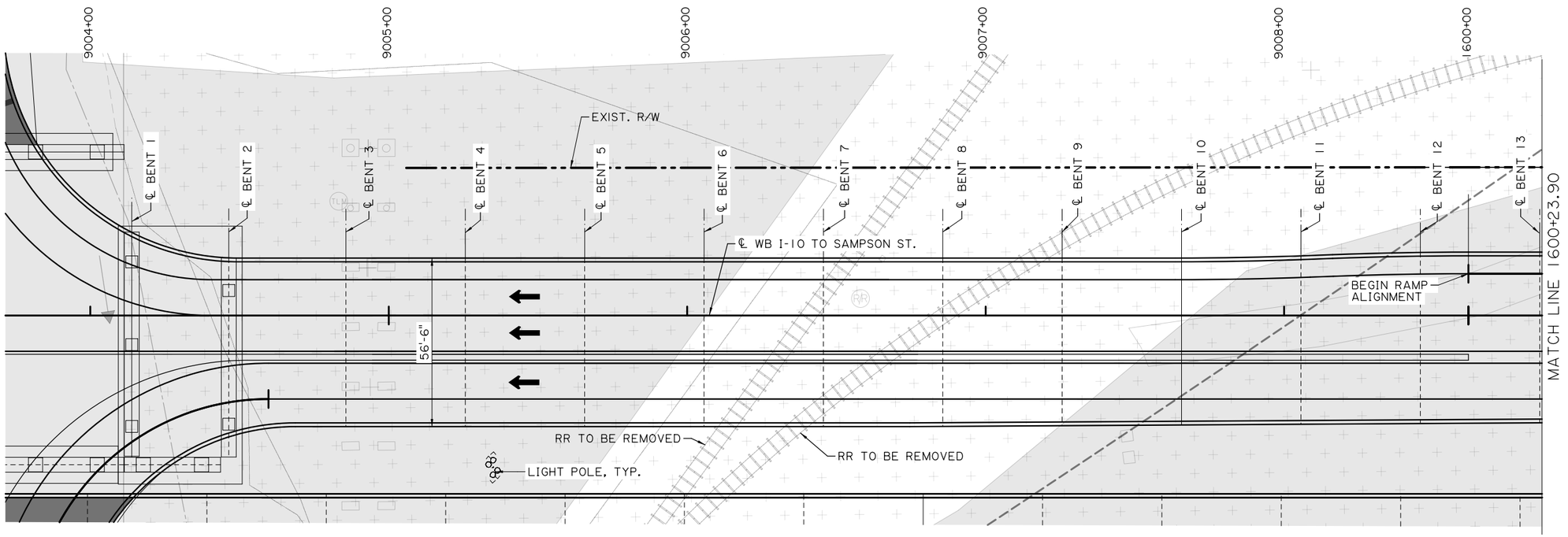

GENERAL PLAN
SCALE: 1" = 20'

WETLANDS

EDC AREA

305' VERTICAL CURVE
P.V.I. 9003+53.69
ELEV. 47.80
G_1 = 1.50%
G_2 = -1.39%

PROFILE EQUATION
180' VERTICAL CURVE
P.V.I. 9008+61.75
ELEV. 38.74
180' VERTICAL CURVE
P.V.I. 1600+00.00
ELEV. 38.39

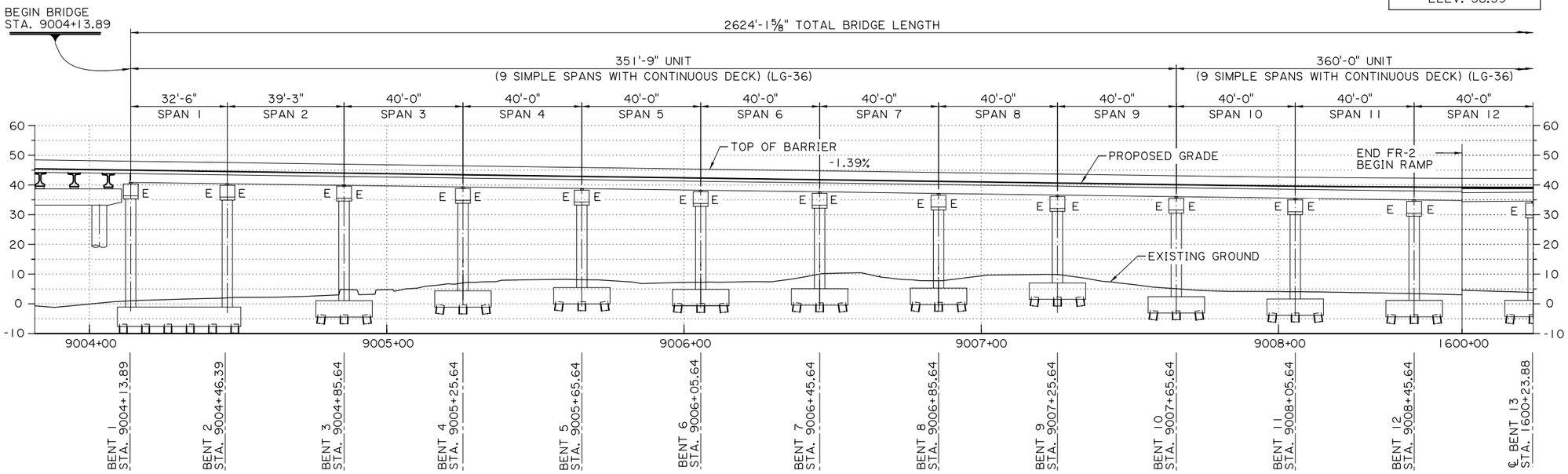

NOTE:
BENT 1 AND BENT 2 SHARE FOOTING WITH B-5 BENT 12.
FOOTING DETAILS FOR BENTS 1 AND 2 ARE PROVIDED WITH THE B-5 SET.

ELEVATION
SCALE: 1" = 20'

SHEET NUMBER	116

PARISH	CONTROL SECTION	STATE PROJECT
CALCASIEU	450-91	H.003931

DESIGN	SGC	DETAIL	KNP	REVIEW	SERIES # 1 OF 5
CHECK	CML	CHECK	SGC		

TECHNICAL PROPOSAL PLANS
PRELIMINARY
NOT FOR CONSTRUCTION
ENGINEER: ROBERT M. GRAY
LICENSE #: 45611
DATE: 5/25/23

NO.	DATE	REVISION OR CHANGE ORDER DESCRIPTION	BY

STATE OF LOUISIANA

B-8 WB I-10 RAMP 13 TO SAMPSON ST. OVER UPRR SPUR
GENERAL PLAN AND ELEVATION

I-10 CALCASIEU RIVER BRIDGE IMPROVEMENTS

DOTD LOUISIANA DEPARTMENT OF TRANSPORTATION & DEVELOPMENT

CBP CALCASIEU BRIDGE PARTNERS

TECHNICAL PROPOSAL PLANS
Z:\Shared\1370 - I-10 Calcasieu P3\DWGS\BRIDGE\B8 - WB I10 ramp R13 to Sampson St over UPRR Spur\B8 - 01_02_03.dgn
5/25/2023 2:40:29 PM

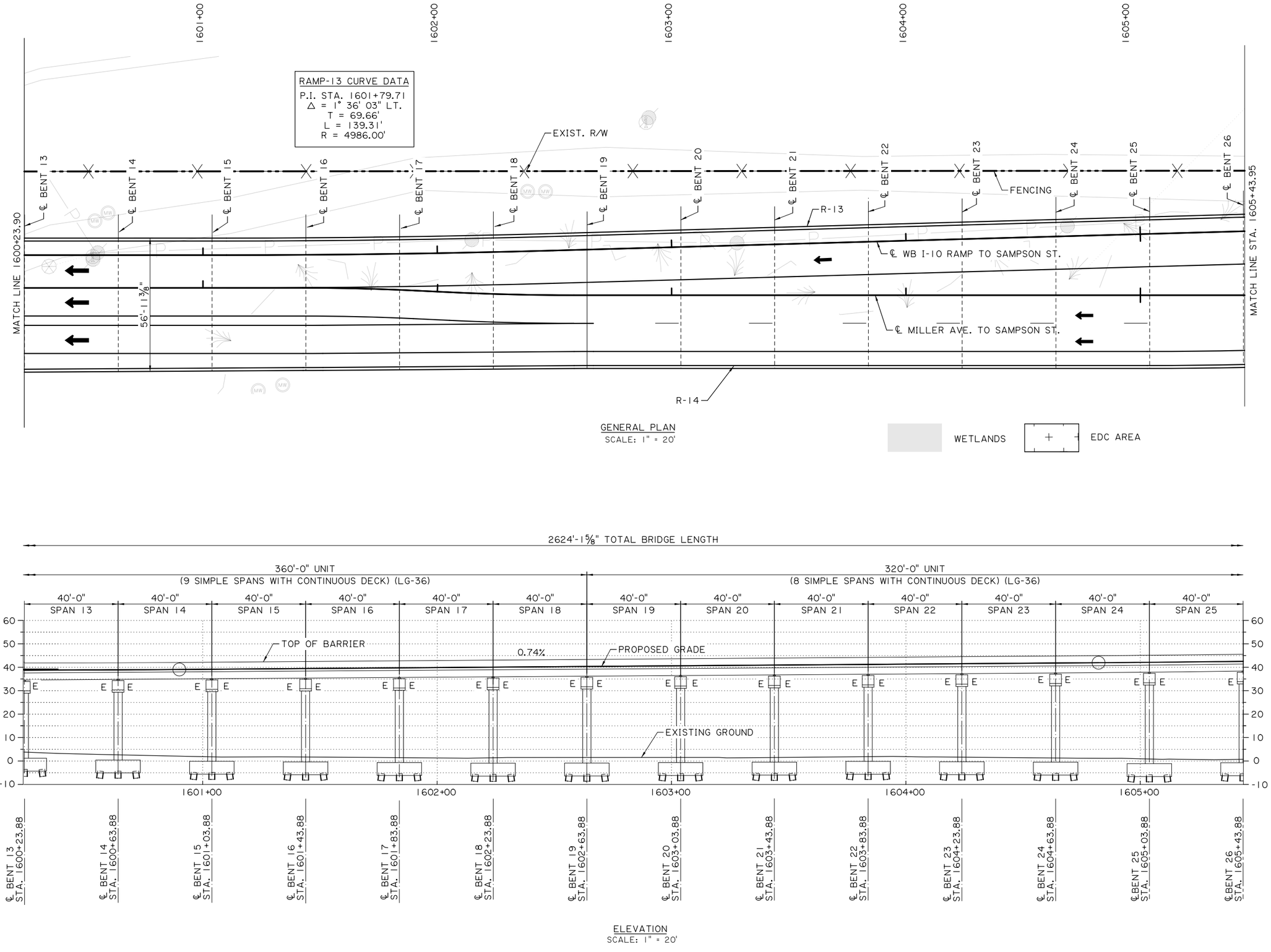

SHEET NUMBER 117

PARISH	CONTROL SECTION	STATE PROJECT
CALCASIEU	450-91	H.003931

DESIGN	CHECK	DETAIL	CHECK	REVIEW	SERIES #
SGC	CML	KNP	SGC		2 OF 5

TECHNICAL PROPOSAL PLANS
PRELIMINARY
NOT FOR CONSTRUCTION
ENGINEER:
ROBERT M. GRAY
LICENSE #:
45611
DATE:
5/25/23

NO.	DATE	REVISION OR CHANGE ORDER DESCRIPTION	BY

B-8 WB I-10 RAMP 13 TO SAMPSON ST. OVER UPRR SPUR

GENERAL PLAN AND ELEVATION

I-10 CALCASIEU RIVER BRIDGE IMPROVEMENTS

DOTD LOUISIANA DEPARTMENT OF TRANSPORTATION & DEVELOPMENT

CBP CALCASIEU BRIDGE PARTNERS

TECHNICAL PROPOSAL PLANS
5/25/2023 2:40:30 PM
Z:\Shared\1370 - I-10 Calcasieu P3\DWGS\BRIDGE\B8 - WB I10 ramp R13 to Sampson St over UPRR Spur\B8 - 01_02_03.dgn

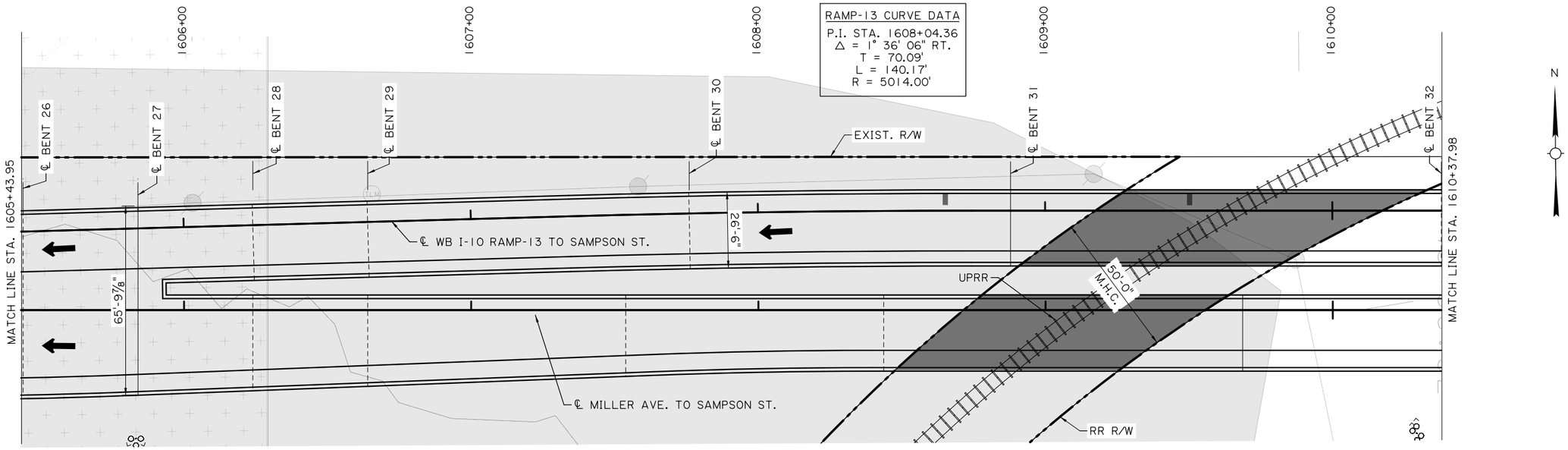

GENERAL PLAN
SCALE: 1" = 20'

WETLANDS EDC AREA

200' VERTICAL CURVE
P.V.I. 1605+82.20
ELEV. 42.68
G_1 = 0.74%
G_2 = 2.36%

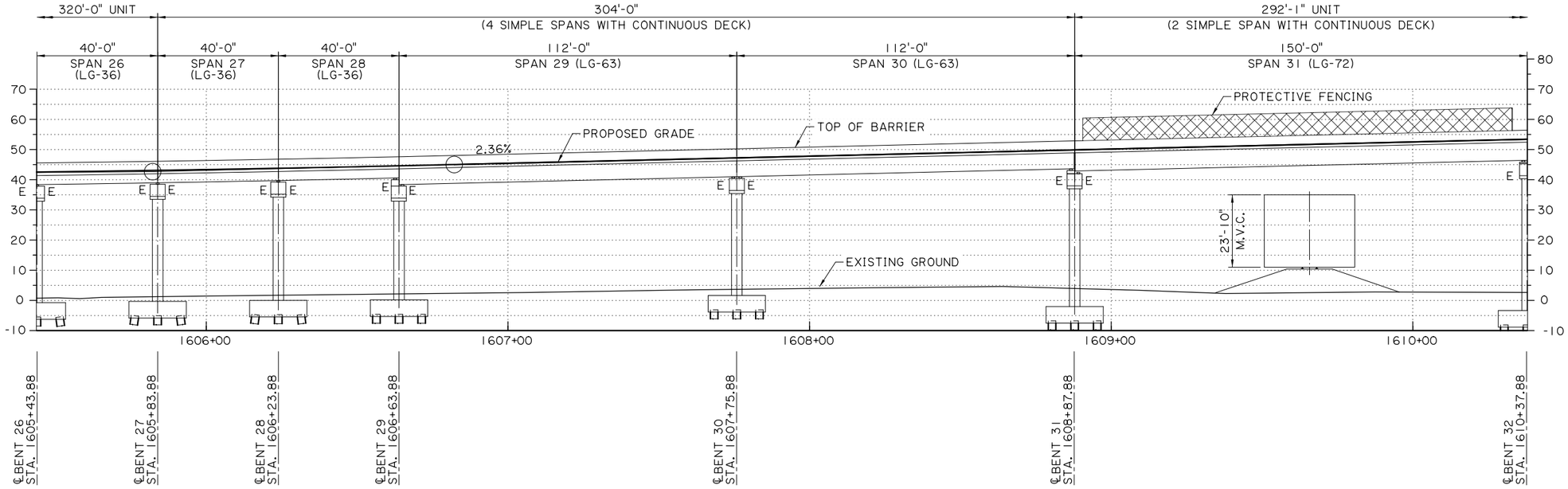

ELEVATION
SCALE: 1" = 20'

SHEET NUMBER	118

PARISH	CONTROL SECTION	STATE PROJECT
CALCASIEU	450-91	H.003931

DESIGN	CHECK	DETAIL	CHECK	REVIEW	SERIES #
SGC	CML	KNP	SGC		3 OF 5

TECHNICAL PROPOSAL PLANS
PRELIMINARY
NOT FOR CONSTRUCTION
ENGINEER:
ROBERT M. GRAY
LICENSE #: 45611
DATE: 5/25/23

NO.	DATE	REVISION OR CHANGE ORDER DESCRIPTION	BY

STATE OF LOUISIANA

B-8 WB I-10 RAMP 13 TO SAMPSON ST. OVER UPRR SPUR

GENERAL PLAN AND ELEVATION

I-10 CALCASIEU RIVER BRIDGE IMPROVEMENTS

DOTD LOUISIANA DEPARTMENT OF TRANSPORTATION & DEVELOPMENT

CBP CALCASIEU BRIDGE PARTNERS

TECHNICAL PROPOSAL PLANS
5/25/2023 2:40:32 PM
Z:\Shared\1370 - I-10 Calcasieu P3\DWGS\BRIDGE\B8 - WB I10 ramp R13 to Sampson St over UPRR Spur\B8 - 01_02_03.dgn

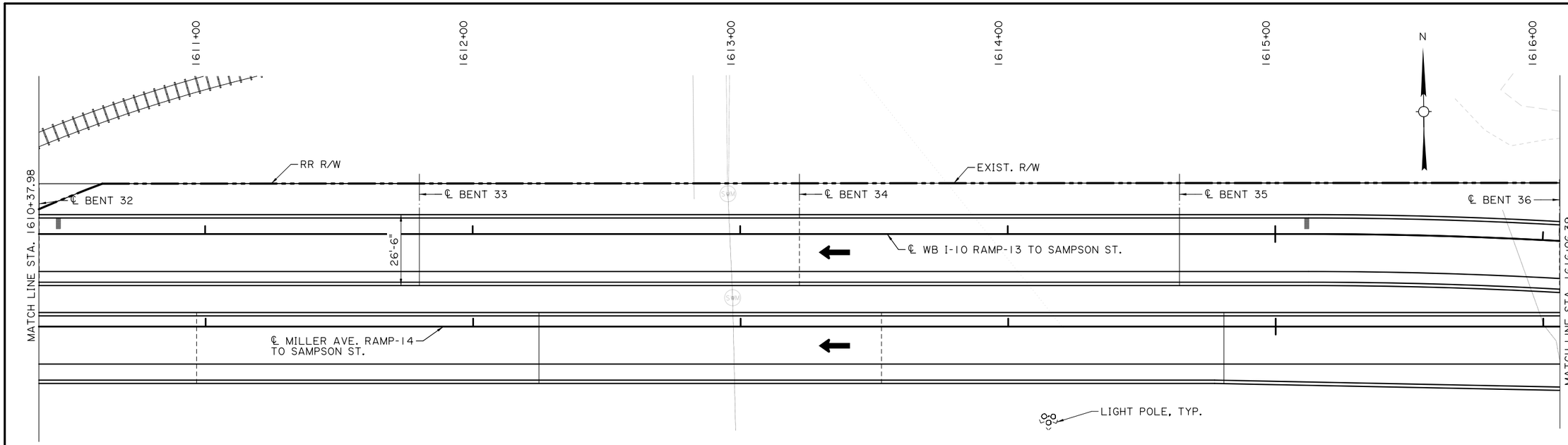

GENERAL PLAN
SCALE: 1" = 20'

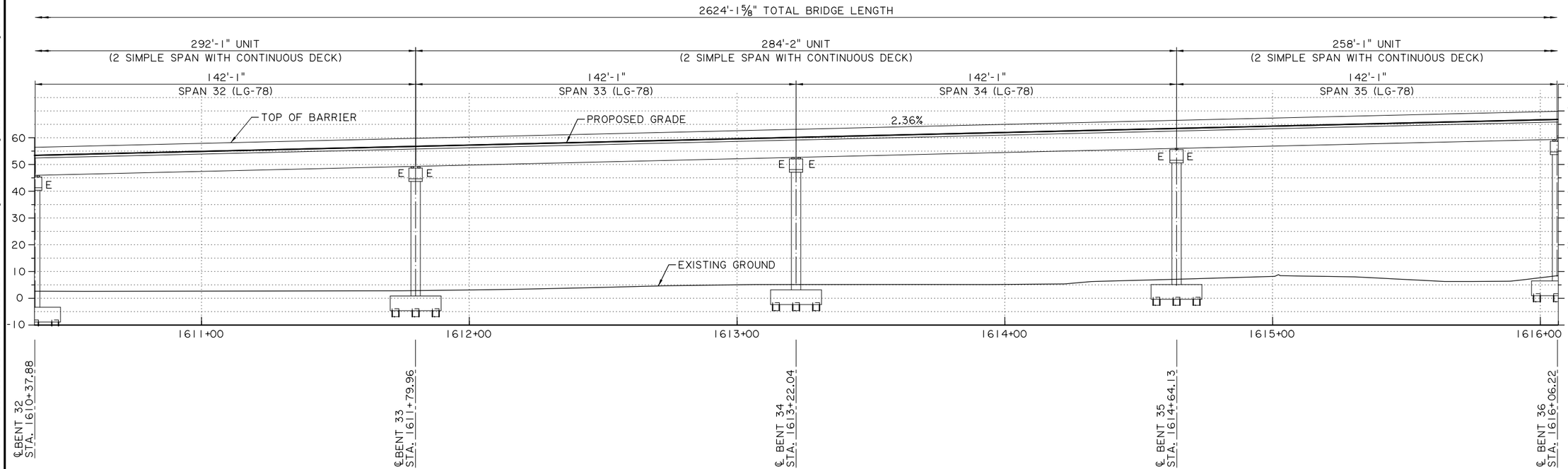

ELEVATION
SCALE: 1" = 20'

SHEET NUMBER	119

PARISH	CONTROL SECTION	STATE PROJECT
CALCASIEU	450-91	H.003931

DESIGN	SGC	DETAIL	KNP	REVIEW
CHECK	CML	CHECK	SGC	SERIES # 4 OF 5

TECHNICAL PROPOSAL PLANS
PRELIMINARY
NOT FOR CONSTRUCTION
ENGINEER:
ROBERT M. GRAY
LICENSE #:
45611
DATE:
5/25/23

NO.	DATE	REVISION OR CHANGE ORDER DESCRIPTION	BY

STATE OF LOUISIANA
JOHN BEL EDWARDS
GOVERNOR

B-8 WB I-10 RAMP 13 TO SAMPSON ST. OVER UPRR SPUR

GENERAL PLAN AND ELEVATION

I-10 CALCASIEU RIVER BRIDGE IMPROVEMENTS

DOTD
LOUISIANA DEPARTMENT OF TRANSPORTATION & DEVELOPMENT

CBP
CALCASIEU BRIDGE PARTNERS

TECHNICAL PROPOSAL PLANS
Z:\Shared\1370 - I-10 Calcasieu P3\DWGS\BRIDGE\B8 - WB I10 ramp R13 to Sampson St over UPRR Spur\B8 - 01_02_03.dgn
5/25/2023 2:40:33 PM

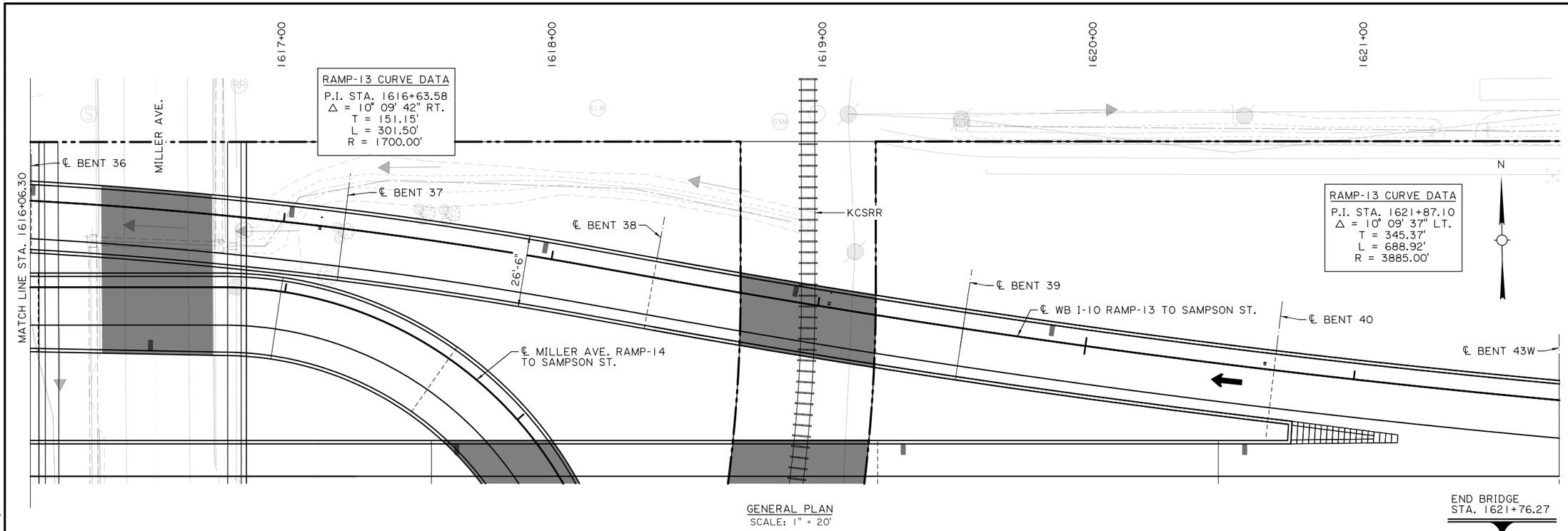

GENERAL PLAN
SCALE: 1" = 20'

2624'-1⅝" TOTAL BRIDGE LENGTH

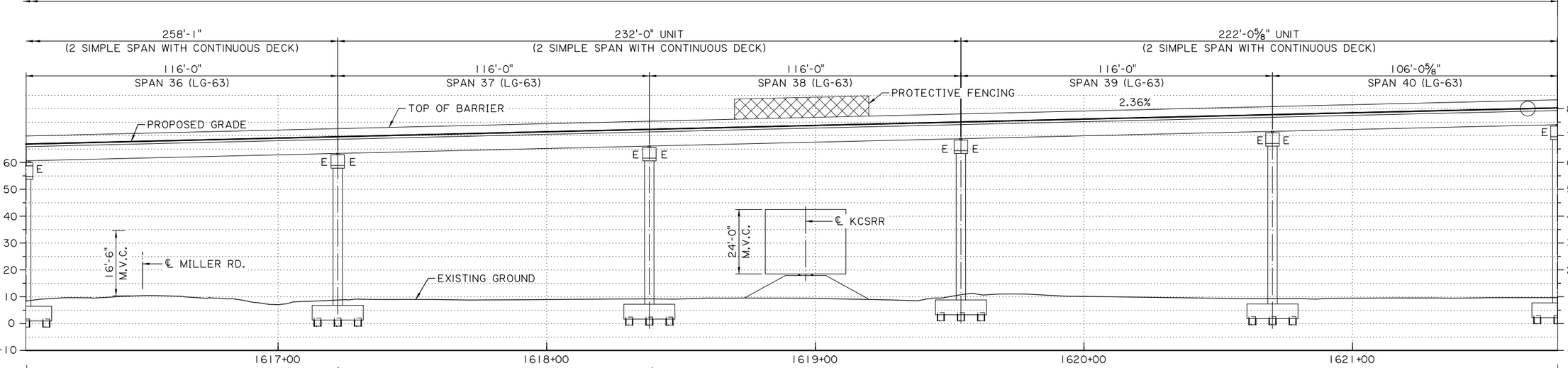

ELEVATION
SCALE: 1" = 20'

SHEET NUMBER	120

PARISH	CONTROL SECTION	STATE PROJECT
CALCASIEU	450-91	H.003931

DESIGN	CHECK	DETAIL	CHECK	REVIEW	SERIES
SGC	CML	KNP	SGC		5 OF 5

TECHNICAL PROPOSAL PLANS
PRELIMINARY
NOT FOR CONSTRUCTION
ENGINEER: ROBERT M. GRAY
LICENSE #: 45611
DATE: 5/25/23

NO.	DATE	REVISION OR CHANGE ORDER DESCRIPTION	BY

STATE OF LOUISIANA
JOHN BEL EDWARDS
GOVERNOR

B-8 WB I-10 RAMP 13 TO SAMPSON ST. OVER UPRR SPUR

GENERAL PLAN AND ELEVATION

I-10 CALCASIEU RIVER BRIDGE IMPROVEMENTS

DOTD
LOUISIANA DEPARTMENT OF TRANSPORTATION & DEVELOPMENT

CBP
CALCASIEU BRIDGE PARTNERS

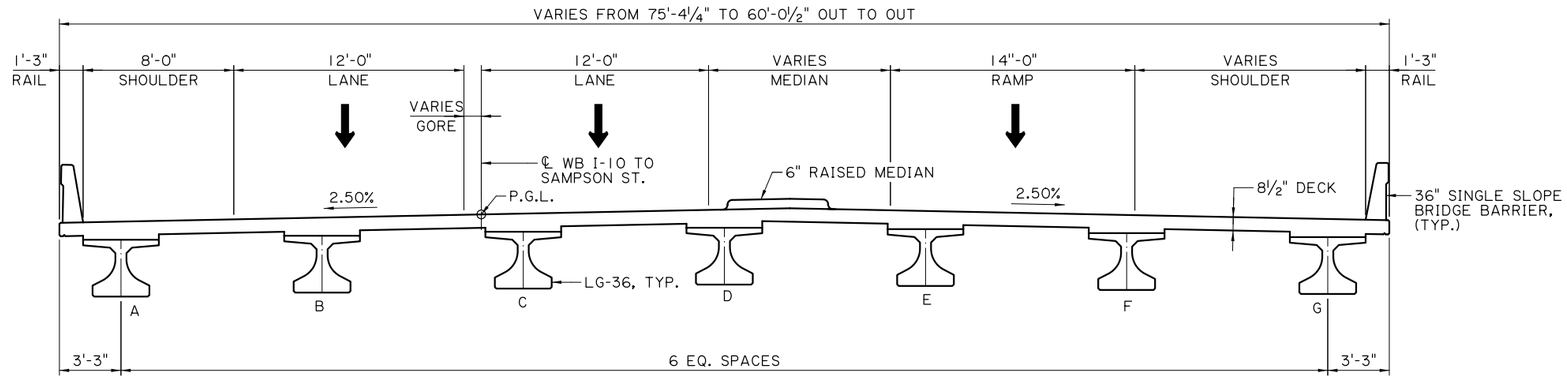

TYPICAL SECTION
(SPAN 1)
SCALE: ¼" = 1'-0"

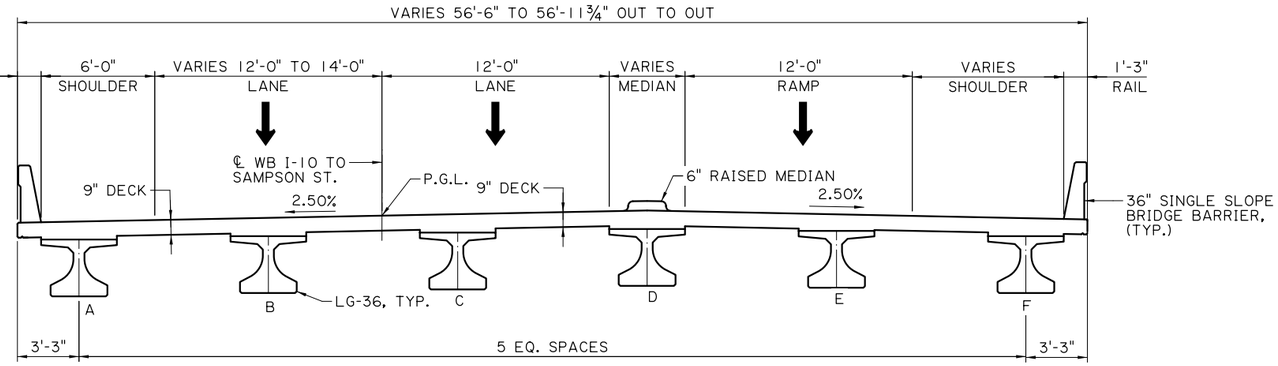

TYPICAL SECTION
(SPANS 2 THRU 14)
SCALE: ¼" = 1'-0"

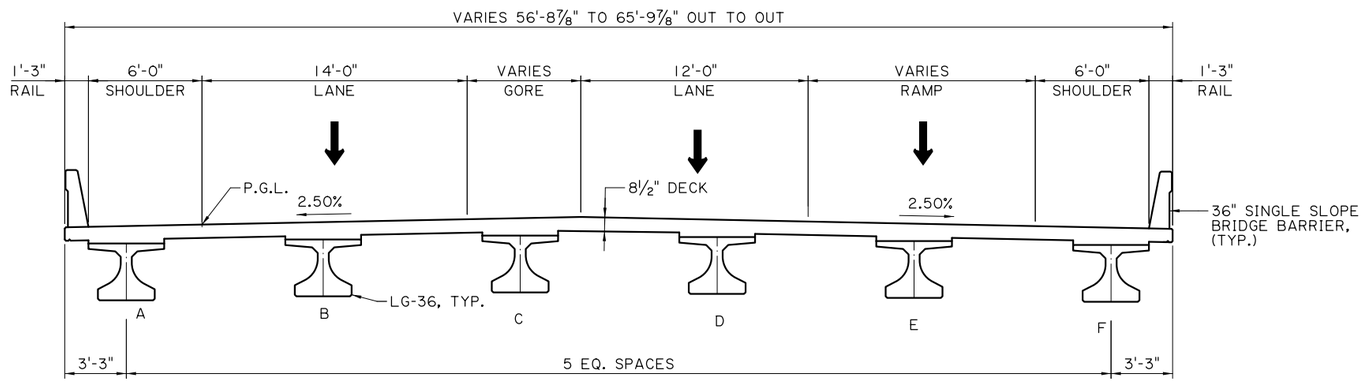

TYPICAL SECTION
(SPANS 15 THRU 26)
SCALE: ¼" = 1'-0"

TECHNICAL PROPOSAL PLANS

Z:\Shared\1370 - I-10 Calcasieu P3\DWGS\BRIDGE\B8 - WB I10 ramp R13 to Sampson St over UPRR Spur\B8 - 01_02_03.dgn 5/25/2023 2:40:36 PM

SHEET NUMBER 121

PARISH	CONTROL SECTION	STATE PROJECT
CALCASIEU	450-91	H.003931

DESIGN	CHECK	DETAIL	CHECK	REVIEW	SERIES # 1 OF 2
SGC	CML	KNP	SGC		

TECHNICAL PROPOSAL PLANS
PRELIMINARY
NOT FOR CONSTRUCTION
ENGINEER:
ROBERT M. GRAY
LICENSE #: 45611
DATE: 5/25/23

NO.	DATE	REVISION OR CHANGE ORDER DESCRIPTION	BY

STATE OF LOUISIANA DEPARTMENT OF TRANSPORTATION AND DEVELOPMENT

B-8 WB I-10 RAMP 13 TO SAMPSON ST. OVER UPRR SPUR

TYPICAL SECTIONS

I-10 CALCASIEU RIVER BRIDGE IMPROVEMENTS

DOTD LOUISIANA DEPARTMENT OF TRANSPORTATION & DEVELOPMENT

CBP CALCASIEU BRIDGE PARTNERS

TECHNICAL PROPOSAL PLANS
Z:\Shared\1370 - I-10 Calcasieu P3\DWGS\BRIDGE\B8 - WB I10 ramp R13 to Sampson St over UPRR Spur\B8 - 01_02_03.dgn
5/25/2023 2:40:36 PM

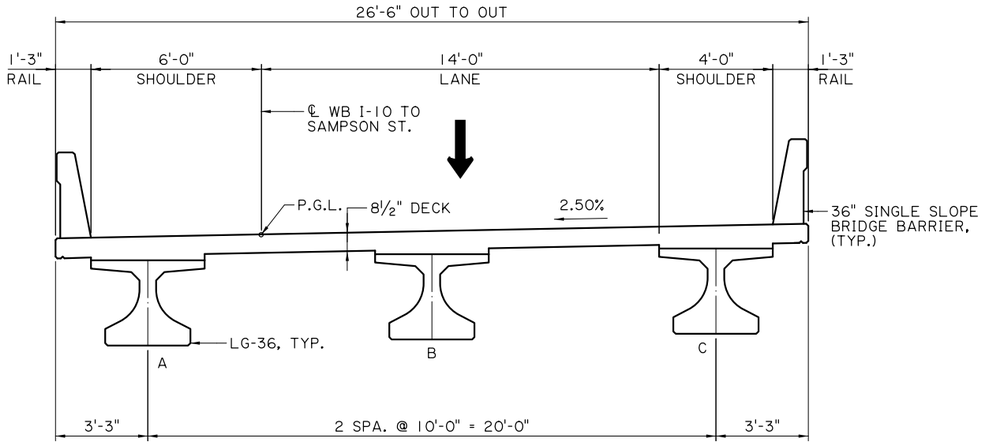

TYPICAL SECTION
(SPANS 27 AND 28)
SCALE: ⅜" = 1'-0"

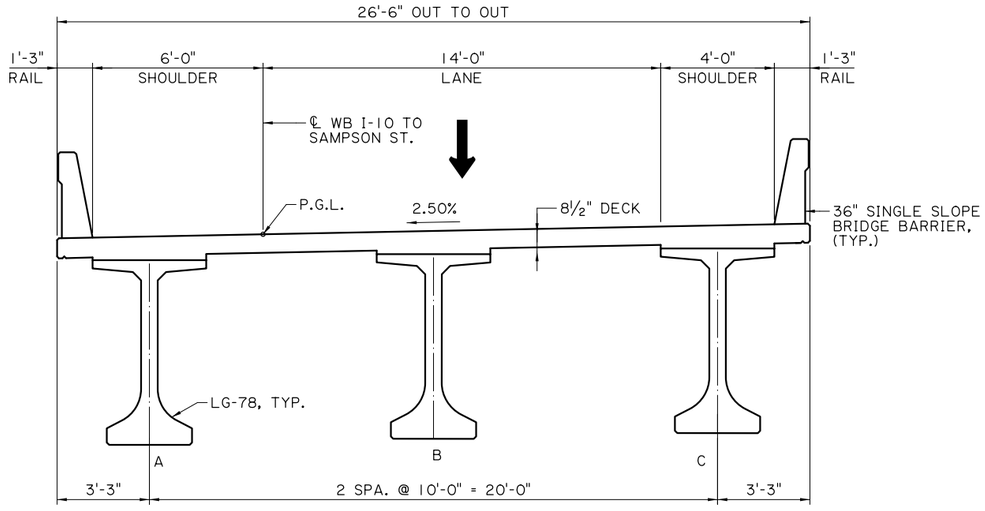

TYPICAL SECTION
(SPANS 32 THRU 35)
SCALE: ⅜" = 1'-0"

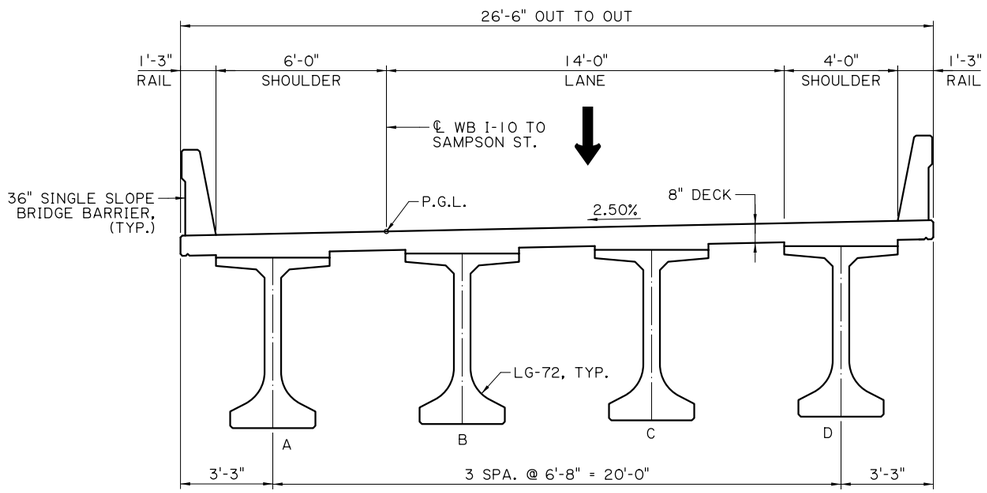

TYPICAL SECTION
(SPAN 31)
SCALE: ⅜" = 1'-0"

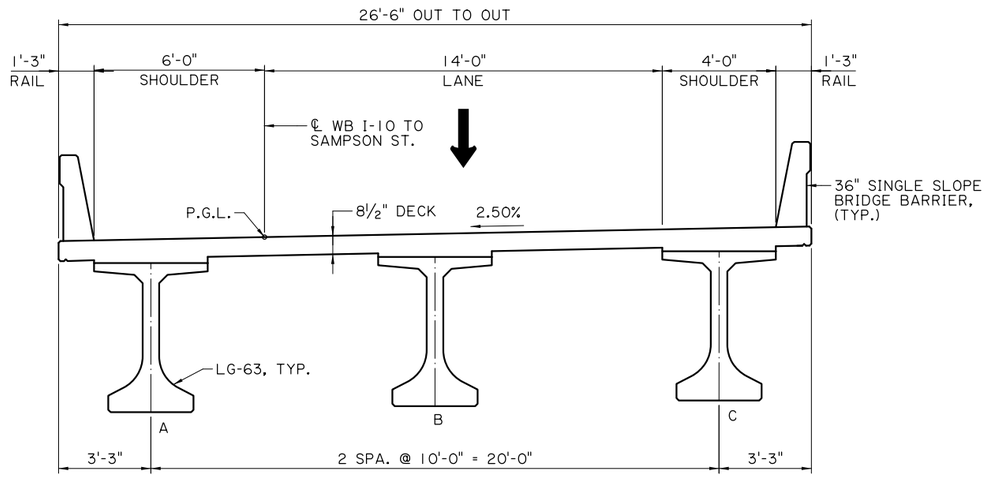

TYPICAL SECTION
(SPANS 29, 30 AND 36 THRU 40)
SCALE: ⅜" = 1'-0"

SHEET NUMBER 122

PARISH	CONTROL SECTION	STATE PROJECT
CALCASIEU	450-91	H.003931

DESIGN	CHECK	DETAIL	CHECK	REVIEW	SERIES #
SGC	CML	KNP	SGC		2 OF 2

TECHNICAL PROPOSAL PLANS
PRELIMINARY
NOT FOR CONSTRUCTION
ENGINEER: ROBERT M. GRAY
LICENSE #: 45611
DATE: 5/25/23

NO.	DATE	REVISION OR CHANGE ORDER DESCRIPTION	BY

STATE OF LOUISIANA — JOHN BEL EDWARDS — GOVERNOR

B-8 WB I-10 RAMP 13 TO SAMPSON ST. OVER UPRR SPUR

TYPICAL SECTIONS

I-10 CALCASIEU RIVER BRIDGE IMPROVEMENTS

DOTD LOUISIANA DEPARTMENT OF TRANSPORTATION & DEVELOPMENT

CBP CALCASIEU BRIDGE PARTNERS

BENT DIMENSIONS			
BENT NO.	"H"	"W"	"S"
1	41'-11"	75'-6"	27'-9"
2	40'-9"	66'-9"	23'-4 1/2"

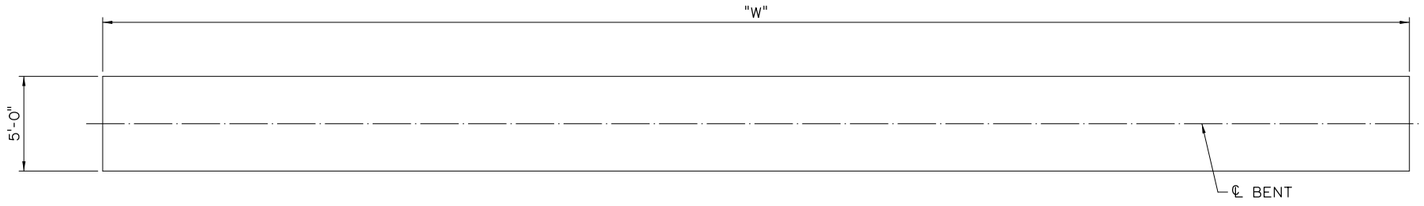

CAP PLAN
SCALE: 1/4" = 1'-0"

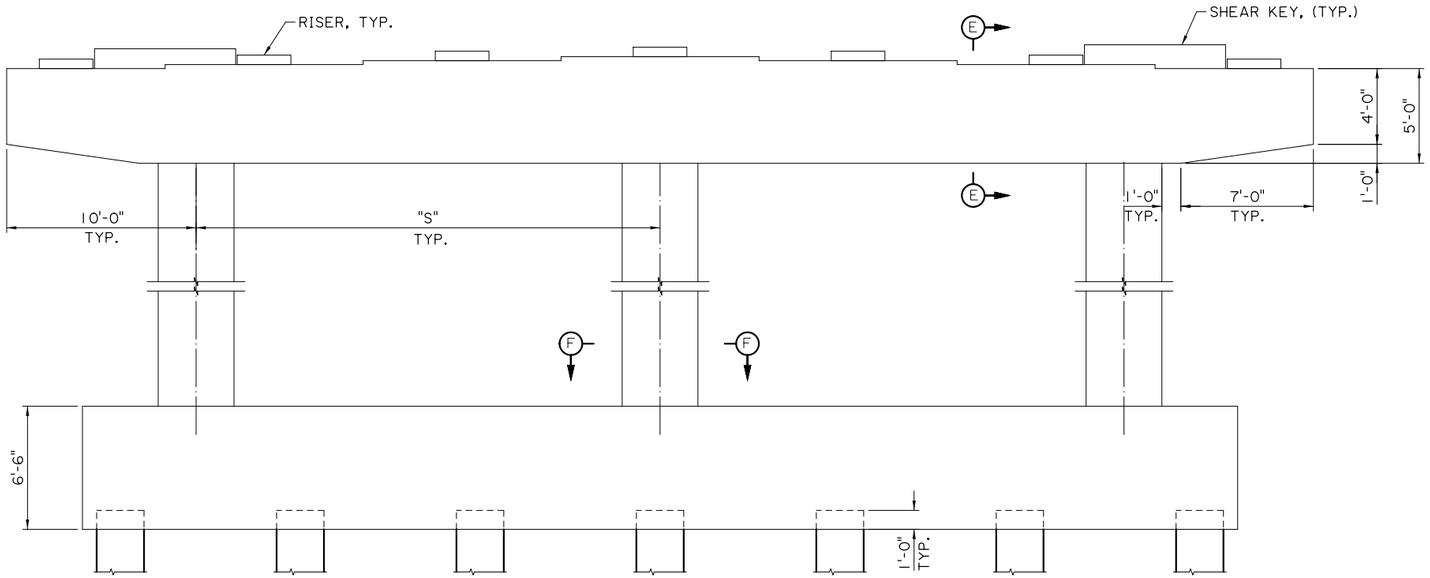

ELEVATION
SCALE: 1/4" = 1'-0"

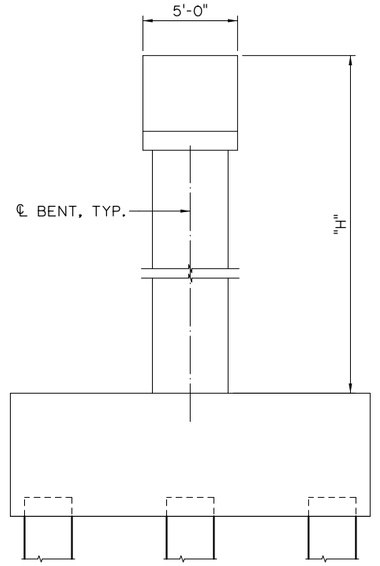

SIDE VIEW
SCALE: 1/4" = 1'-0"

NOTE:
BENT 1 AND BENT 2 SHARE FOOTING WITH BENT 12 OF STRUCTURE B-5. PLEASE SEE STRUCTURE B-5 PLANS FOR FOOTING DETAILS OF BENT 1AND BENT 2.

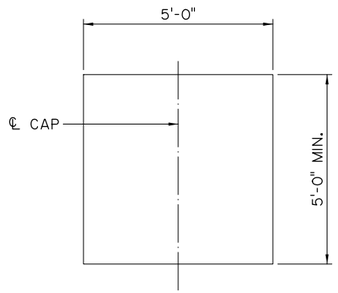

SECTION E-E
SCALE: 1/2" = 1'-0"

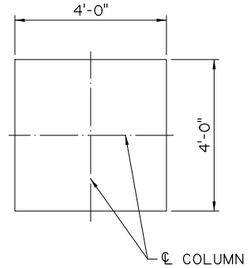

SECTION F-F
SCALE: 1/2" = 1'-0"

TECHNICAL PROPOSAL PLANS

Z:\Shared\1370 - I-10 Calcasieu P3\DWGS\BRIDGE\B8 - WB I10 ramp R13 to Sampson St over UPRR Spur\B8 - 01_02_03.dgn 5/25/2023 2:40:37 PM

SHEET NUMBER 123

PARISH	CONTROL SECTION	STATE PROJECT
CALCASIEU	450-91	H.003931

DESIGN	CHECK	DETAIL	CHECK	REVIEW	SERIES # 1 OF 4
SGC	CML	KNP	SGC		

TECHNICAL PROPOSAL PLANS
PRELIMINARY
NOT FOR CONSTRUCTION
ENGINEER:
ROBERT M. GRAY
LICENSE #:
45611
DATE:
5/25/23

NO.	DATE	REVISION OR CHANGE ORDER DESCRIPTION	BY

B-8 WB I-10 RAMP I3 TO SAMPSON ST. OVER UPRR SPUR
BENT DETAILS
I-10 CALCASIEU RIVER BRIDGE IMPROVEMENTS

DOTD LOUISIANA DEPARTMENT OF TRANSPORTATION & DEVELOPMENT
CBP CALCASIEU BRIDGE PARTNERS

TECHNICAL PROPOSAL PLANS
Z:\Shared\1370 - I-10 Calcasieu P3\DWGS\BRIDGE\B8 - WB I10 ramp R13 to Sampson St over UPRR Spur\B8 - 01_02_03.dgn
5/25/2023 2:40:39 PM

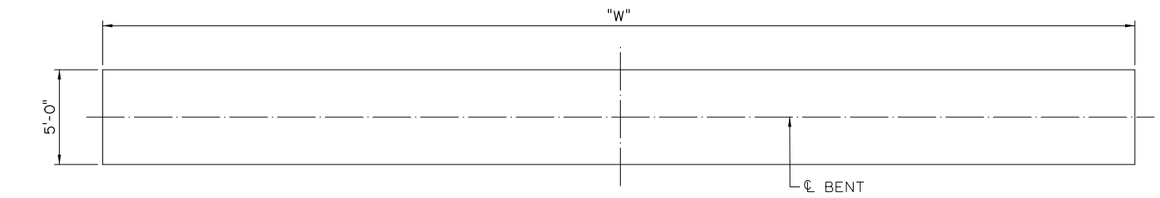

CAP PLAN
SCALE: 1/4" = 1'-0"

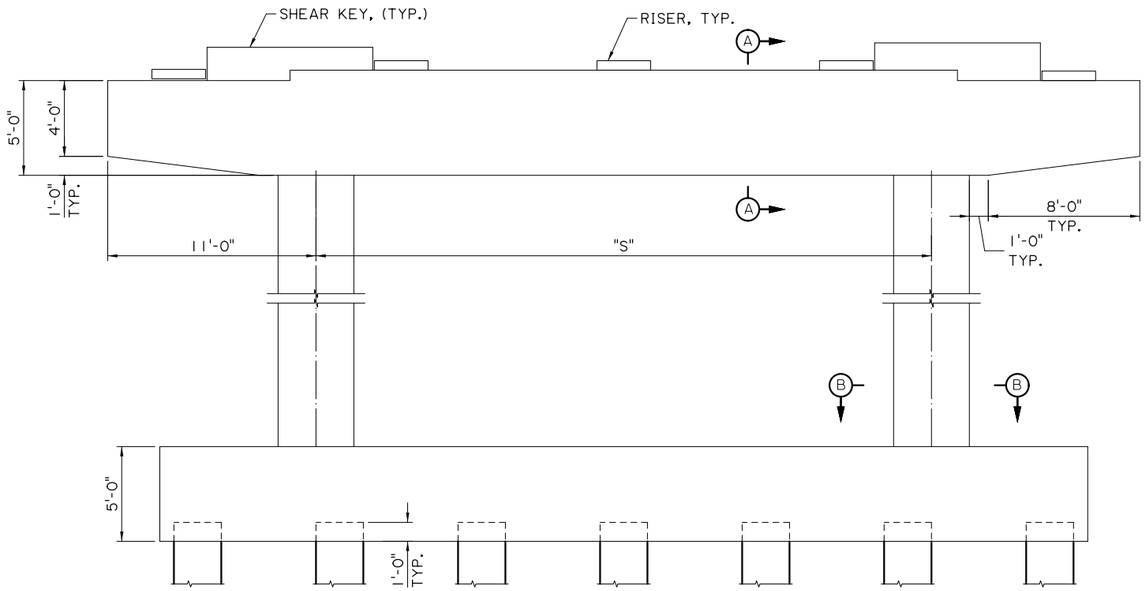

ELEVATION
SCALE: 1/4" = 1'-0"

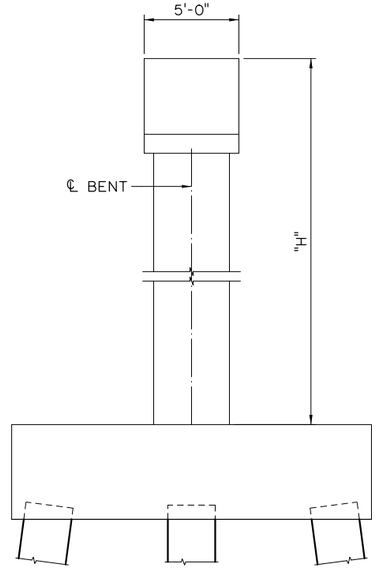

SIDE VIEW
SCALE: 1/4" = 1'-0"

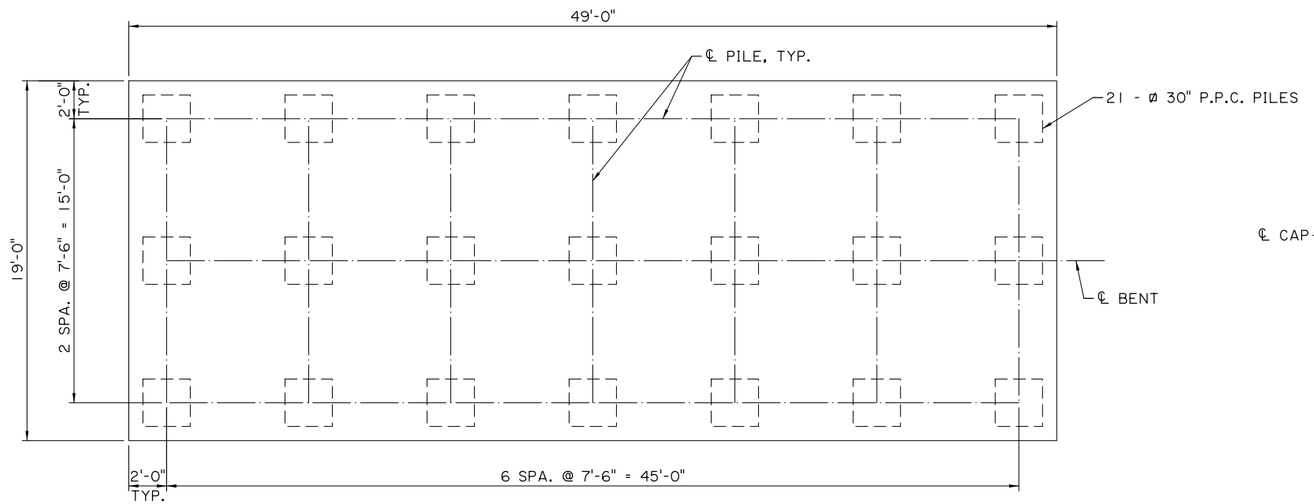

FOOTING PLAN
SCALE: 1/4" = 1'-0"

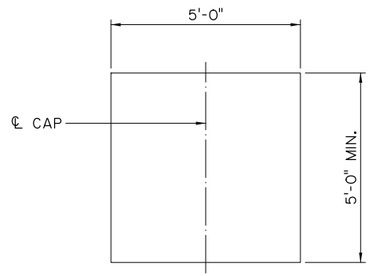

SECTION A-A
SCALE: 1/2" = 1'-0"

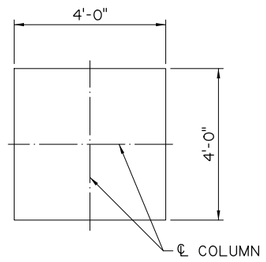

SECTION B-B
SCALE: 1/2" = 1'-0"

BENT DIMENSION			
BENT NO.	"H"	"W"	"S"
3	38'-6"	56'-6'	34'-6"
4	34'-5'	56'-6'	34'-6"
5	32'-9"	56'-6'	34'-6"
6	32'-9"	56'-6'	34'-6"
7	32'-1'	56'-6'	34'-6"
8	31'-3"	56'-5"	36'-5"
9	29'-0"	56'-2"	34'-2"
10	33'-2"	56'-0"	34'-0"
11	33'-5"	56'-8"	34'-8"
12	33'-4"	57'-4"	35'-4"
13	32'-8"	57'-3"	35'-2"
14	33'-11"	57'-0"	35'-0'
15	34'-8"	56'-9"	34'-9"
16	35'-4"	56'-7"	34'-7"
17	35'-10"	56'-9"	34'-9'
18	36'-4"	57'-3'	35'-3"
19	36'-8"	58'-0"	36'-0"
20	36'-8"	59'-0"	37'-0"
21	36'-9"	60'-3"	38'-3"

SHEET NUMBER 124

PARISH	CONTROL SECTION	STATE PROJECT
CALCASIEU	450-91	H.003931

DESIGN	CHECK	DETAIL	CHECK	REVIEW	SERIES
SGC	CML	KNP	SGC	2 OF 4	

TECHNICAL PROPOSAL PLANS
PRELIMINARY
NOT FOR CONSTRUCTION
ENGINEER: ROBERT M. GRAY
LICENSE #: 45611
DATE: 5/25/23

NO.	DATE	REVISION OR CHANGE ORDER DESCRIPTION	BY

B-8 WB I-10 RAMP I3 TO SAMPSON ST. OVER UPRR SPUR
BENT DETAILS
I-10 CALCASIEU RIVER BRIDGE IMPROVEMENTS

DOTD LOUISIANA DEPARTMENT OF TRANSPORTATION & DEVELOPMENT
CBP CALCASIEU BRIDGE PARTNERS

BENT DIMENSION			
BENT NO.	"H"	"W"	"S"
22	37'-2"	61'-4"	20'-8"
23	37'-7"	62'-5"	21'-2 1/2"
24	38'-1"	63'-7"	21'-9 1/2"
25	39'-0"	64'-8"	22'-4"
26	39'-2"	65'-4"	22'-8"
27	39'-4"	65'-4"	22'-8"

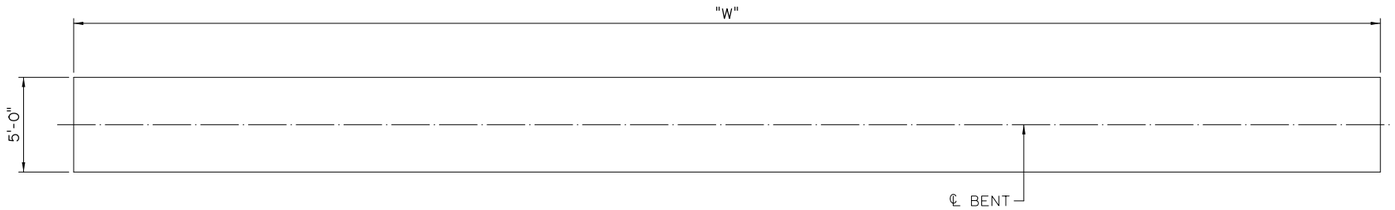

CAP PLAN
SCALE: 1/4" = 1'-0"

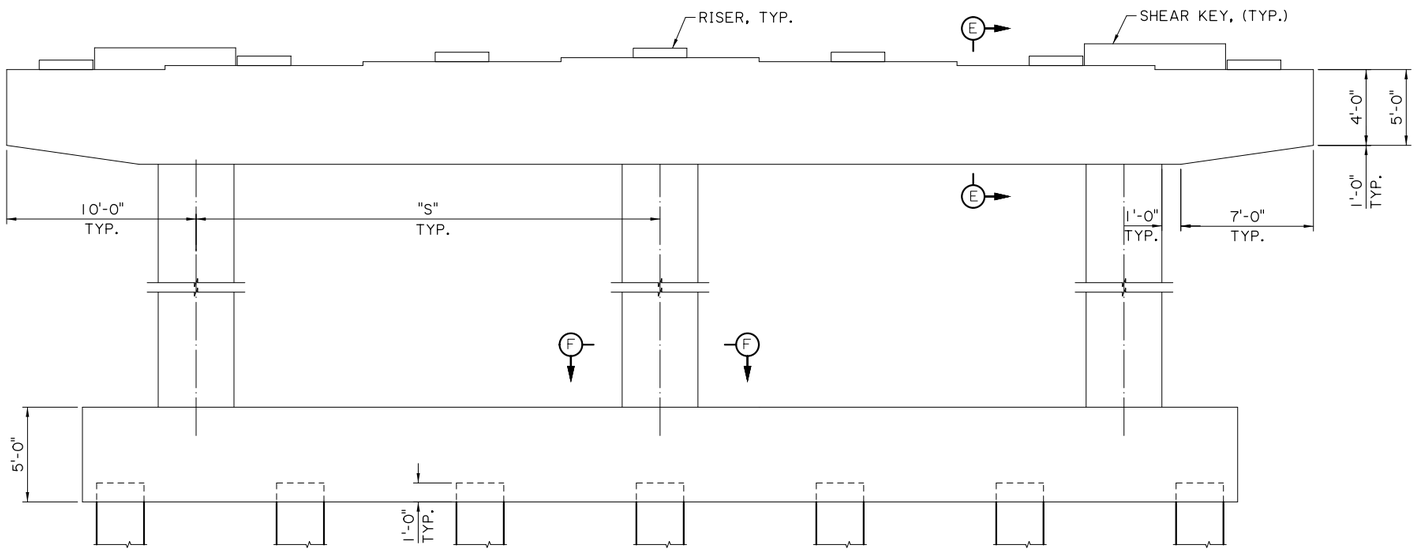

ELEVATION
SCALE: 1/4" = 1'-0"

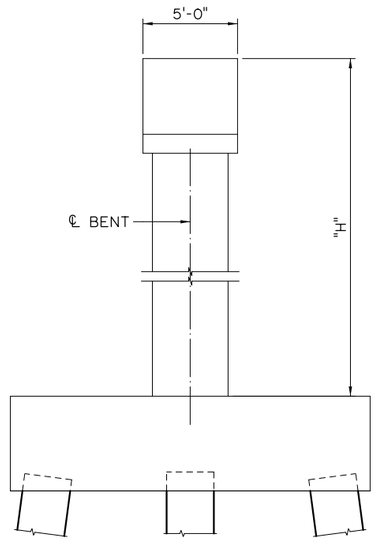

SIDE VIEW
SCALE: 1/4" = 1'-0"

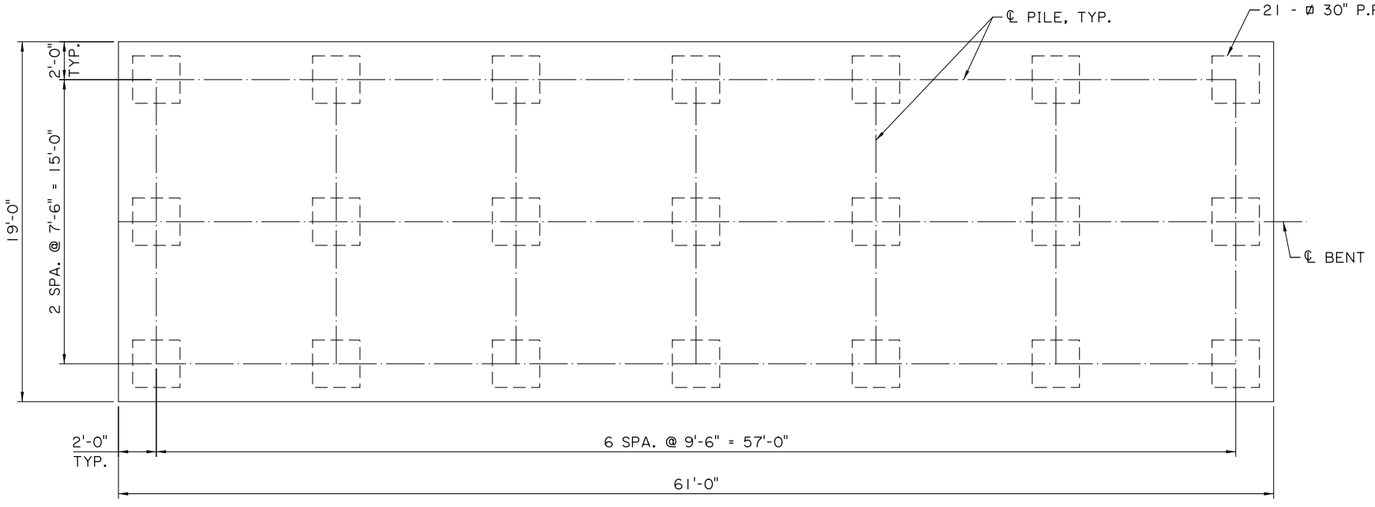

FOOTING PLAN
SCALE: 1/4" = 1'-0"

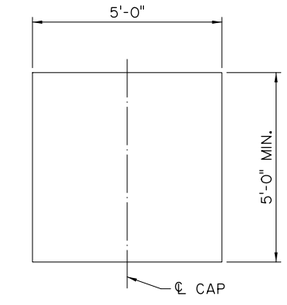

SECTION E-E
SCALE: 1/2" = 1'-0"

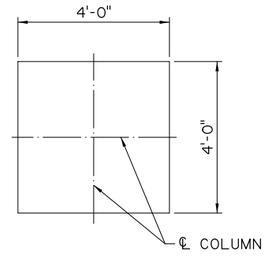

SECTION F-F
SCALE: 1/2" = 1'-0"

SHEET NUMBER 125

PARISH	CONTROL SECTION	STATE PROJECT
CALCASIEU	450-91	H.003931

DESIGN	CHECK	DETAIL	CHECK	REVIEW	SERIES
SGC	CML	KNP	SGC		3 OF 4

TECHNICAL PROPOSAL PLANS
PRELIMINARY
NOT FOR CONSTRUCTION
ENGINEER:
ROBERT M. GRAY
LICENSE #:
45611
DATE:
5/25/23

NO.	DATE	REVISION OR CHANGE ORDER DESCRIPTION	BY

B-8 WB I-10 RAMP 13 TO SAMPSON ST. OVER UPRR SPUR
BENT DETAILS
I-10 CALCASIEU RIVER BRIDGE IMPROVEMENTS

DOTD LOUISIANA DEPARTMENT OF TRANSPORTATION & DEVELOPMENT
CBP CALCASIEU BRIDGE PARTNERS

TECHNICAL PROPOSAL PLANS

5/25/2023 2:40:41 PM

Z:\Shared\1370 - I-10 Calcasieu P3\DWGS\BRIDGE\B8 - WB I10 ramp R13 to Sampson St over UPRR Spur\B8 - 01_02_03.dgn

TECHNICAL PROPOSAL PLANS
Z:\Shared\1370 - I-10 Calcasieu P3\DWGS\BRIDGE\B8 - WB I10 ramp R13 to Sampson St over UPRR Spur\B8 - 01_02_03.dgn
5/25/2023 2:40:42 PM

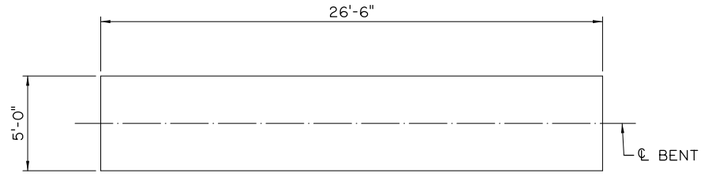

CAP PLAN
SCALE: 1/4" = 1'-0"

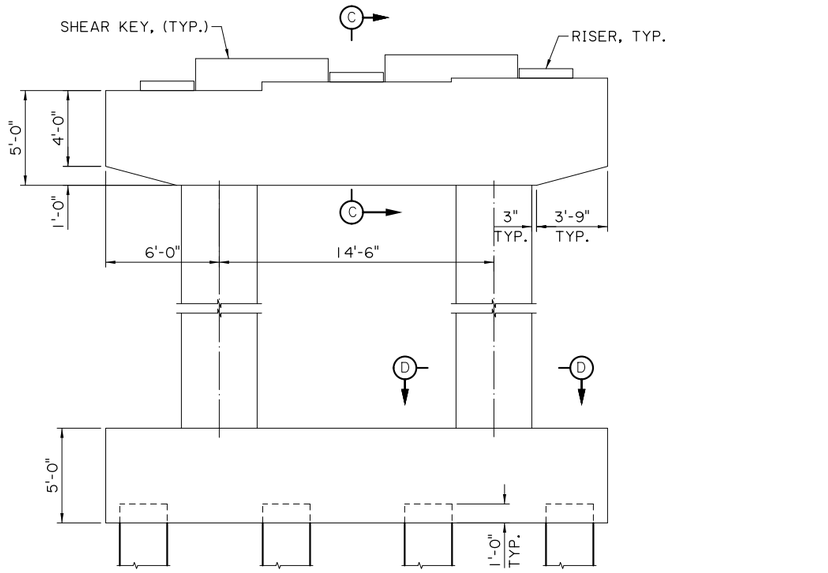

ELEVATION
SCALE: 1/4" = 1'-0"

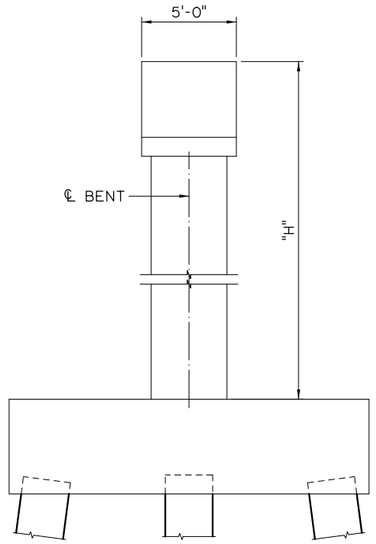

SIDE VIEW
SCALE: 1/4" = 1'-0"

BENT DIMENSION	
BENT NO.	"H"
28	39'-9"
29	40'-6"
30	41'-7"
31	47'-4"
32	45'-4"
33	49'-8"
34	50'-9"
35	52'-3"
36	54'-2"
37	56'-7"
38	58'-11"
39	60'-0"
40	64'-3"

NOTE:
PILES ONLY BATTERED FOR BENT 28.
ALL PILES SHALL BE PLUMB FOR BENTS 29-40.

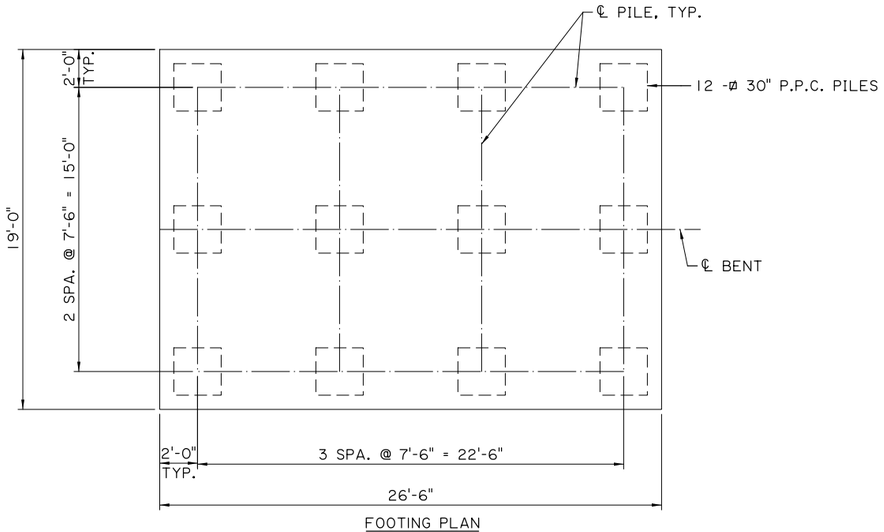

FOOTING PLAN
SCALE: 1/4" = 1'-0"

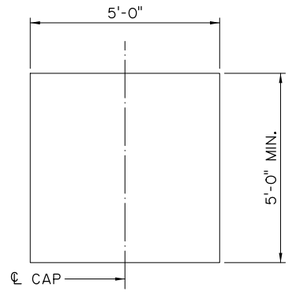

SECTION C-C
SCALE: 1/2" = 1'-0"

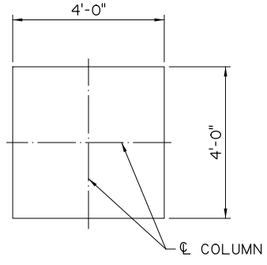

SECTION D-D
SCALE: 1/2" = 1'-0"

SHEET NUMBER 126

PARISH	CONTROL SECTION	STATE PROJECT
CALCASIEU	450-91	H.003931

DESIGN	CHECK	DETAIL	CHECK	REVIEW	SERIES
SGC	CML	KNP	SGC		4 OF 4

TECHNICAL PROPOSAL PLANS
PRELIMINARY
NOT FOR CONSTRUCTION
ENGINEER:
ROBERT M. GRAY
LICENSE #:
45611
DATE:
5/25/23

NO.	DATE	REVISION OR CHANGE ORDER DESCRIPTION	BY

B-8 WB I-10 RAMP 13 TO SAMPSON ST. OVER UPRR SPUR
BENT DETAILS
I-10 CALCASIEU RIVER BRIDGE IMPROVEMENTS

LOUISIANA DEPARTMENT OF TRANSPORTATION & DEVELOPMENT
CALCASIEU BRIDGE PARTNERS

TECHNICAL PROPOSAL PLANS
Z:\Shared\1370 - I-10 Calcasieu P3\DWGS\BRIDGE\B9 - Miller Ave. ramp R14 to Sampson St over UPRR Spur\B9 - 01_08.dgn
5/25/2023 2:42:29 PM

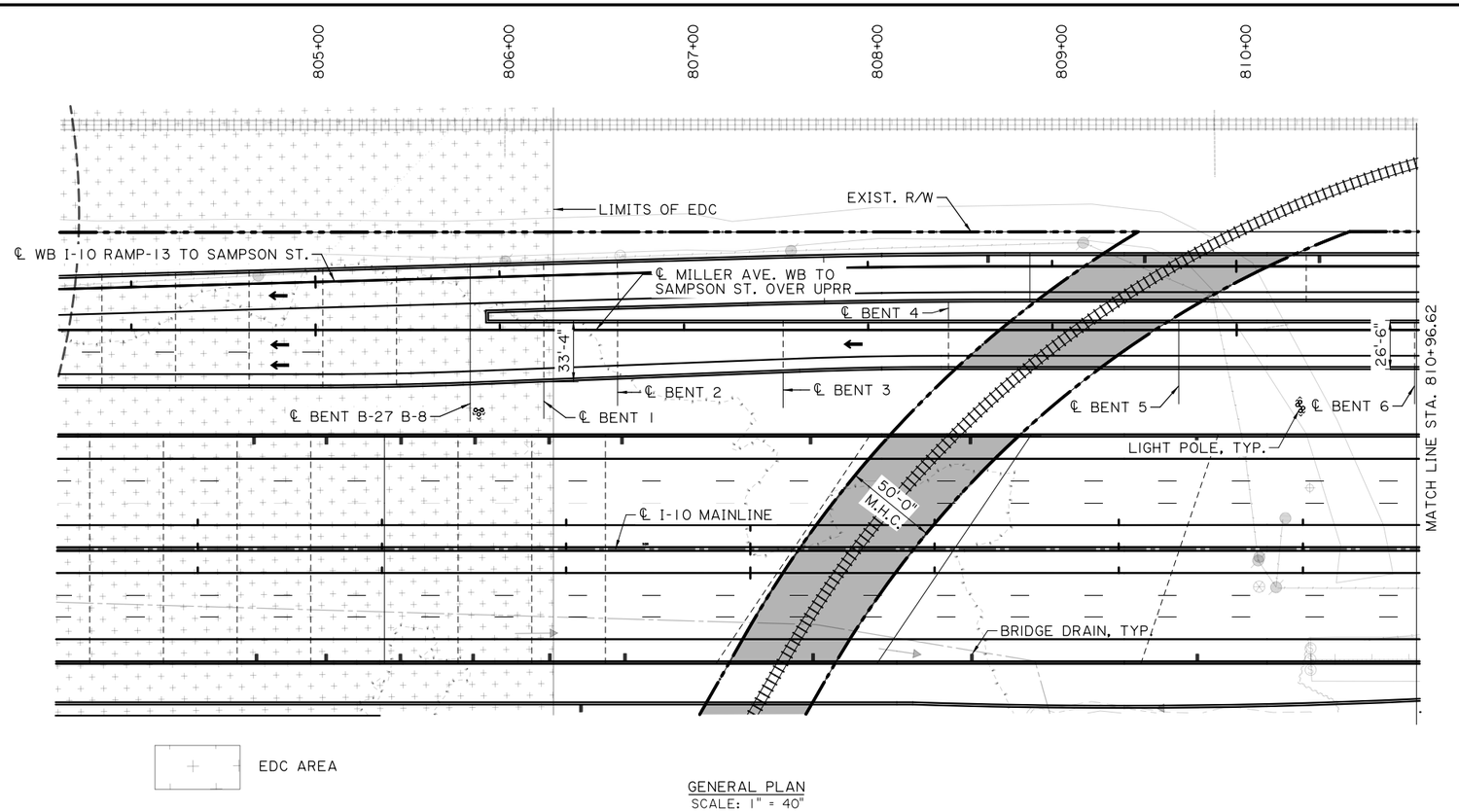

GENERAL PLAN
SCALE: 1" = 40'

150' VERTICAL CURVE
P.V.I. 808+85.49
ELEV. 45.32
G_1 = 0.74%
G_2 = -0.74%

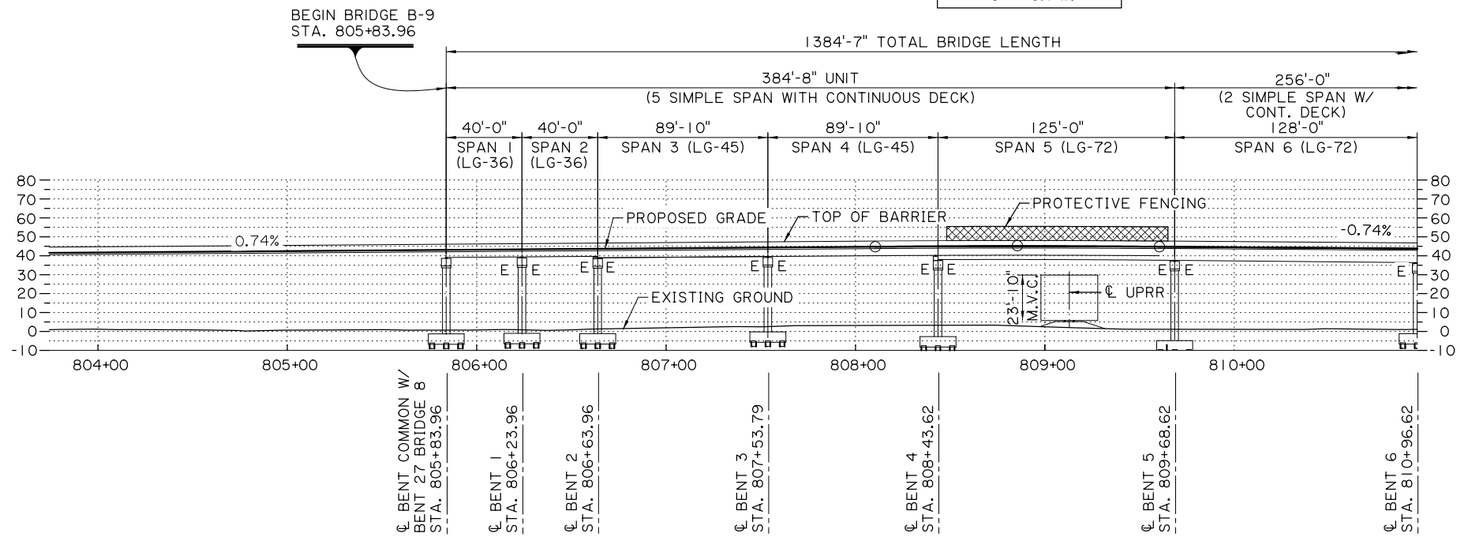

ELEVATION
SCALE: 1" = 40'

SHEET NUMBER 127

PARISH	CONTROL SECTION	STATE PROJECT
CALCASIEU	450-91	H.003931

DESIGN	CHECK	DETAIL	CHECK	REVIEW	SERIES
SGC	CML	KNP	SGC		1 OF 2

TECHNICAL PROPOSAL PLANS
PRELIMINARY
NOT FOR CONSTRUCTION
ENGINEER:
ROBERT M. GRAY
LICENSE #:
45611
DATE:
5/25/23

NO.	DATE	REVISION OR CHANGE ORDER DESCRIPTION	BY

B-9 MILLER AVE. RAMP TO SAMPSON ST. OVER UPRR

GENERAL PLAN AND ELEVATION

I-10 CALCASIEU RIVER BRIDGE IMPROVEMENTS

LOUISIANA DEPARTMENT OF TRANSPORTATION & DEVELOPMENT

CALCASIEU BRIDGE PARTNERS

TECHNICAL PROPOSAL PLANS
Z:\Shared\1370 - I-10 Calcasieu P3\DWGS\BRIDGE\B9 - Miller Ave. ramp R14 to Sampson St over UPRR Spur\B9 - Miller Ave. ramp R14 to Sampson St over UPRR Spur_08.dgn
5/25/2023 3:52:24 PM

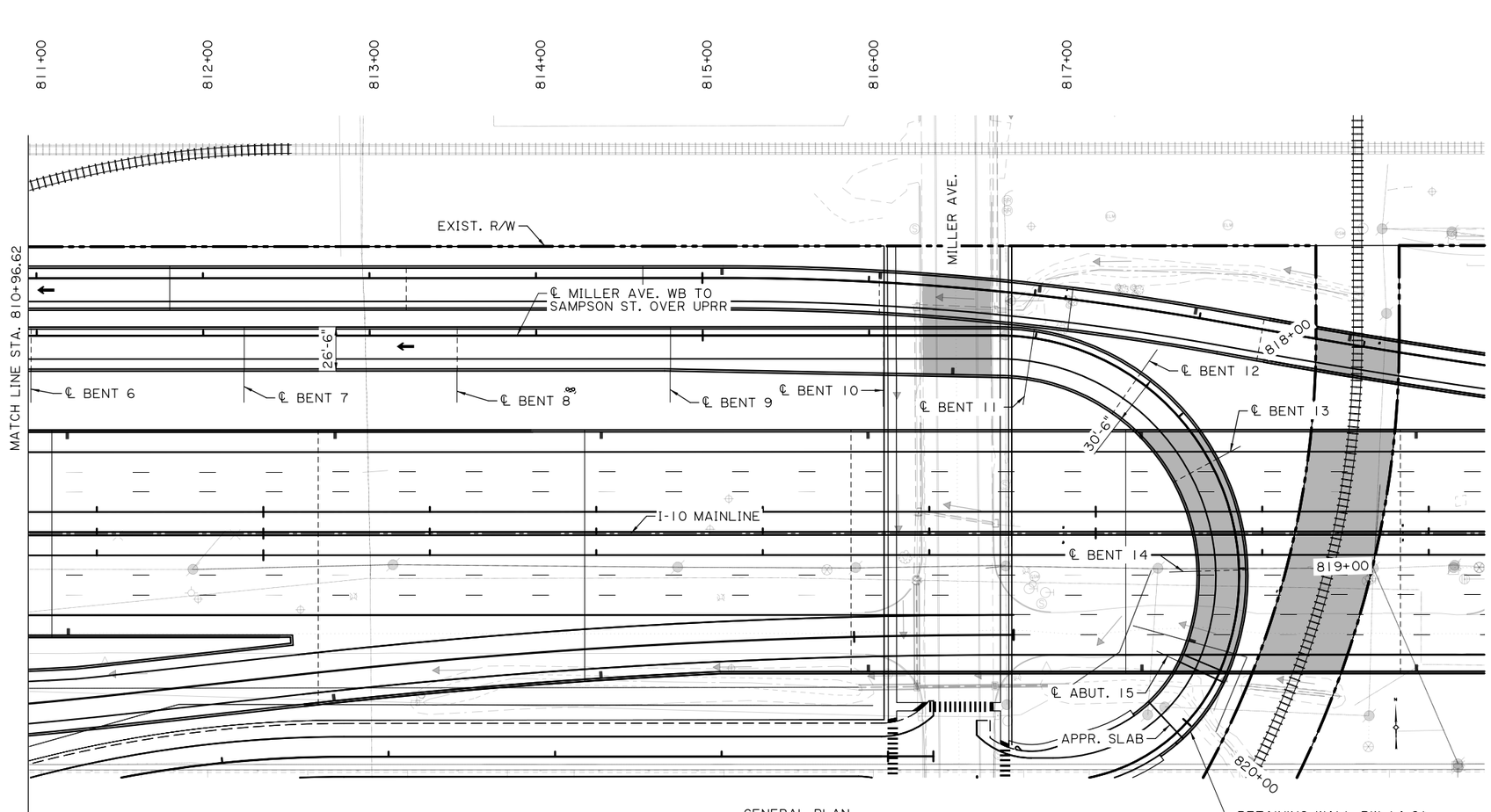

GENERAL PLAN
SCALE: 1" = 40"

RAMP R-14
HORIZ. CURVE DATA
P.I. STA. 819+62.18
Δ = 112°38'01" RT.
T = 215.56'
L = 285.05'
R = 145.00'

RAMP R-14
HORIZ. CURVE DATA
P.I. STA. 820+34.80
Δ = 67°20'55" RT.
T = 72.62'
L = 128.11'
R = 108.99'

400' VERTICAL CURVE
P.V.I. 816+75.35
ELEV. 39.47
G_1 = -0.74%
G_2 = -7.50%

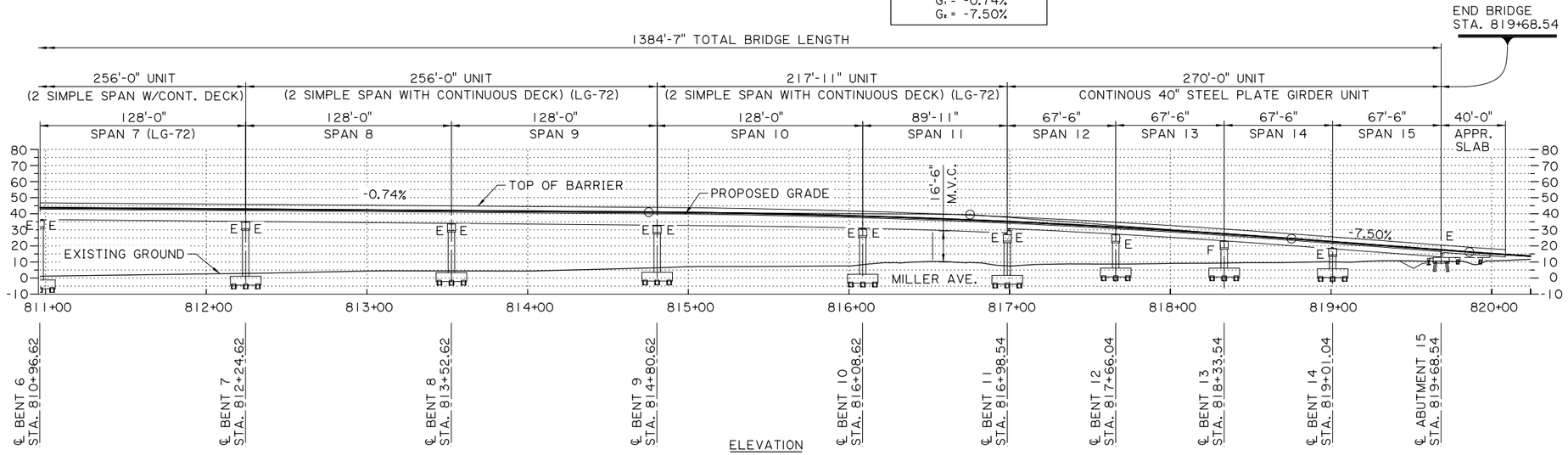

ELEVATION
SCALE: 1" = 40'

SHEET NUMBER 128

PARISH	CONTROL SECTION	STATE PROJECT
CALCASIEU	450-91	H.003931

DESIGN	CHECK	DETAIL	CHECK	REVIEW	SERIES
SGC	CML	KNP	SGC		2 OF 2

TECHNICAL PROPOSAL PLANS
PRELIMINARY
NOT FOR CONSTRUCTION
ENGINEER:
ROBERT M. GRAY
LICENSE #:
45611
DATE:
5/25/23

NO.	DATE	REVISION OR CHANGE ORDER DESCRIPTION	BY

B-9 MILLER AVE. RAMP TO SAMPSON ST. OVER UPRR

GENERAL PLAN AND ELEVATION

I-10 CALCASIEU RIVER BRIDGE IMPROVEMENTS

LOUISIANA DEPARTMENT OF TRANSPORTATION & DEVELOPMENT

CALCASIEU BRIDGE PARTNERS

TECHNICAL PROPOSAL PLANS
5/25/2023 2:42:59 PM
Z:\Shared\1370 - I-10 Calcasieu P3\DWGS\BRIDGE\B9 - Miller Ave. ramp R14 to Sampson St over UPRR Spur\B9 - 01_08.dgn

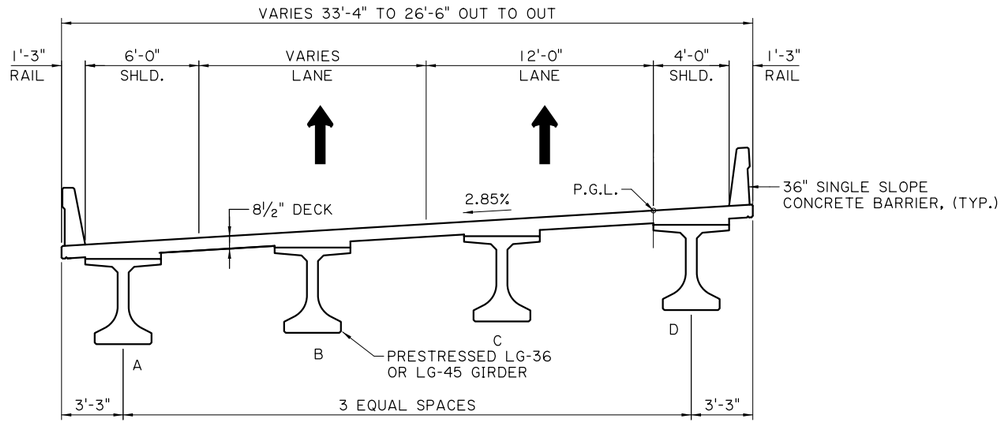

TYPICAL SECTION
(SPAN 1 THRU 4)
SCALE: 1/4" = 1'-0"

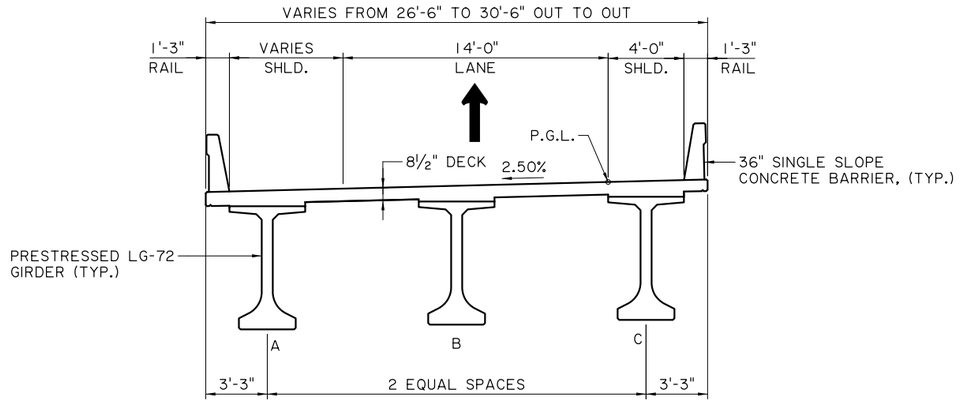

TYPICAL SECTION
(SPAN 5 THRU 11)
SCALE: 1/4" = 1'-0"

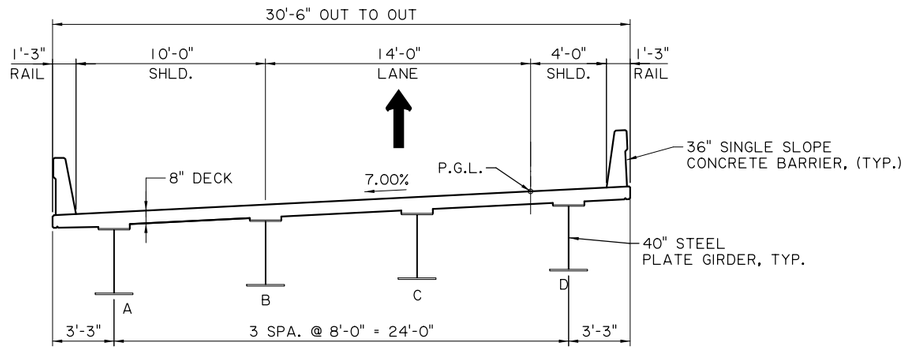

TYPICAL SECTION
(SPANS 12 THRU 15)
SCALE: 1/4" = 1'-0"

NOTE: TYPICAL SECTIONS SHOWN LOOKING BACKSTATION

SHEET NUMBER 129

PARISH	CONTROL SECTION	STATE PROJECT
CALCASIEU	450-91	H.003931

DESIGN	CHECK	DETAIL	CHECK	REVIEW	SERIES # 1 OF 1
SGC	CML	KNP	SGC		

TECHNICAL PROPOSAL PLANS
PRELIMINARY
NOT FOR CONSTRUCTION
ENGINEER:
ROBERT M. GRAY
LICENSE #:
45611
DATE:
5/25/23

NO.	DATE	REVISION OR CHANGE ORDER DESCRIPTION	BY

B-9 MILLER AVE. RAMP TO SAMPSON ST. OVER UPRR

TYPICAL SECTIONS

I-10 CALCASIEU RIVER BRIDGE IMPROVEMENTS

LOUISIANA DEPARTMENT OF TRANSPORTATION & DEVELOPMENT

CALCASIEU BRIDGE PARTNERS

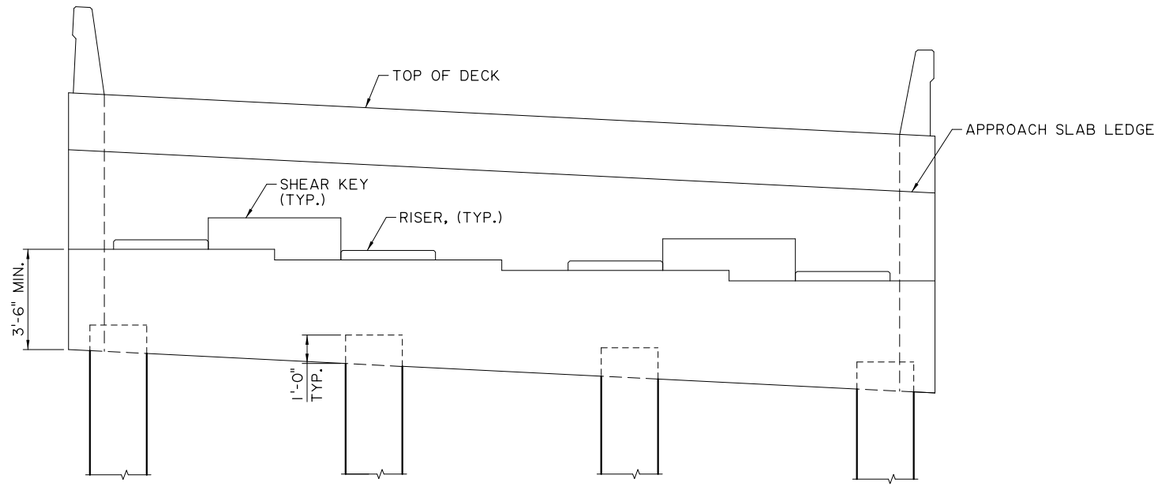

ELEVATION
SCALE: 3/8" = 1'-0"

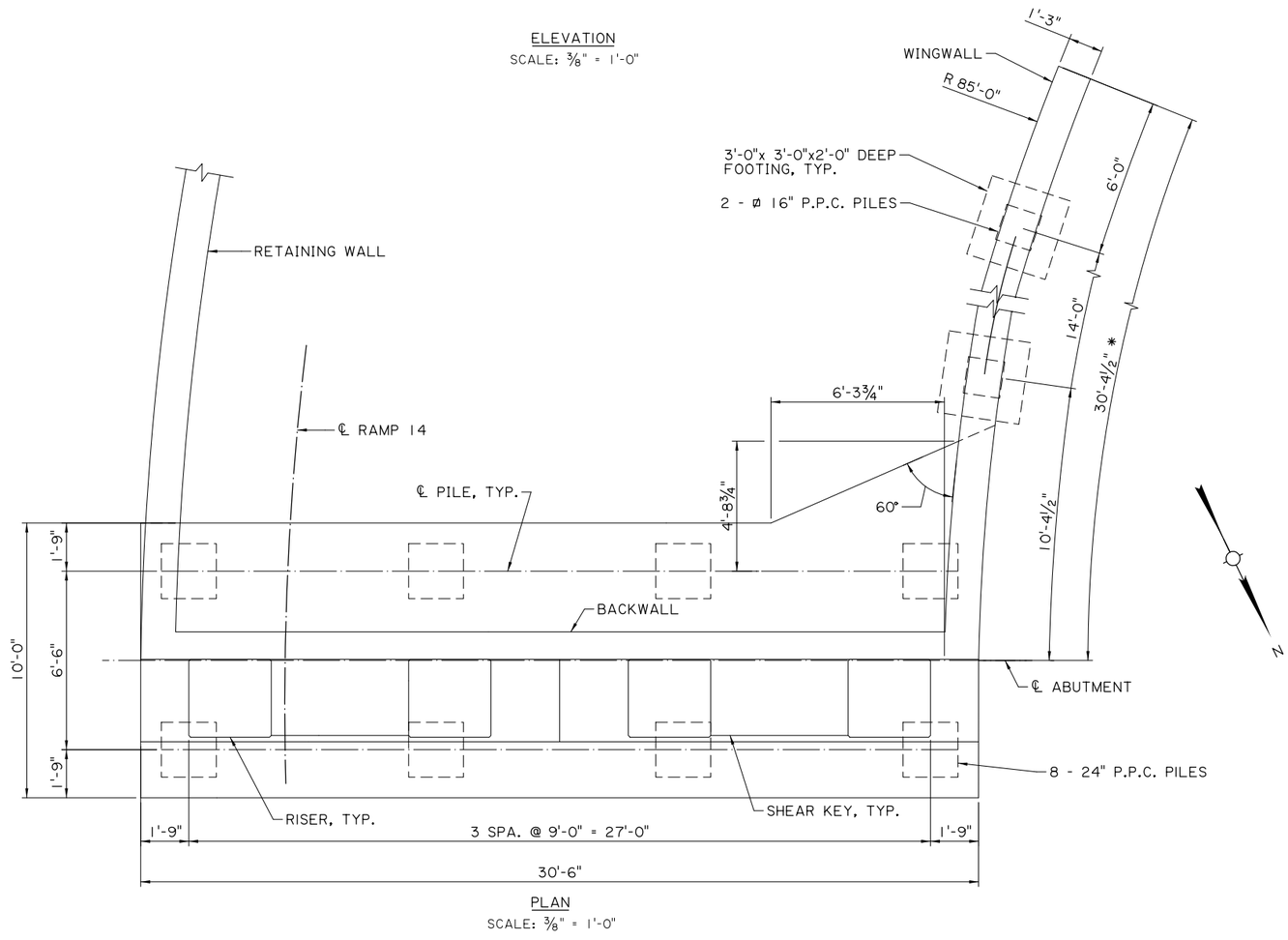

PLAN
SCALE: 3/8" = 1'-0"

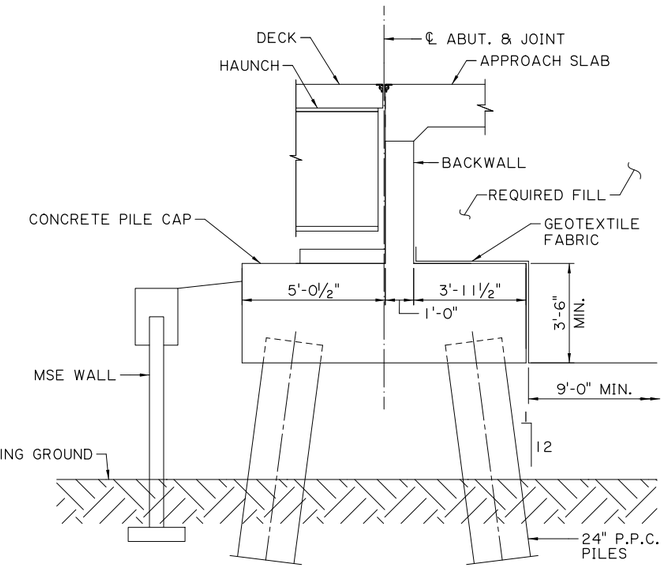

ABUTMENT SECTION
SCALE: 3/8" = 1'-0"

* ALL DIMENSIONS MEASURED ALONG OUTSIDE OF WALL

TECHNICAL PROPOSAL PLANS

Z:\Shared\1370 - I-10 Calcasieu P3\DWGS\BRIDGE\B9 - Miller Ave. ramp R14 to Sampson St over UPRR Spur\B9 - 01_08.dgn 5/25/2023 2:42:59 PM

SHEET NUMBER	130
PARISH	CALCASIEU
CONTROL SECTION	450-91
STATE PROJECT	H.003931
DESIGN	SGC
CHECK	CML
DETAIL	KNP
CHECK	SGC
REVIEW	
SERIES #	1 OF 1

TECHNICAL PROPOSAL PLANS
PRELIMINARY
NOT FOR CONSTRUCTION
ENGINEER:
ROBERT M. GRAY
LICENSE #:
45611
DATE:
5/25/23

NO.	DATE	REVISION OR CHANGE ORDER DESCRIPTION	BY

B-9 MILLER AVE. RAMP TO SAMPSON ST. OVER UPPR

ABUTMENT DETAILS

I-10 CALCASIEU RIVER BRIDGE IMPROVEMENTS

LOUISIANA DEPARTMENT OF TRANSPORTATION & DEVELOPMENT

CALCASIEU BRIDGE PARTNERS

TECHNICAL PROPOSAL PLANS
Z:\Shared\1370 - I-10 Calcasieu P3\DWGS\BRIDGE\B9 - Miller Ave. ramp R14 to Sampson St over UPRR Spur\B9 - 01_08.dgn
5/25/2023 2:43:00 PM

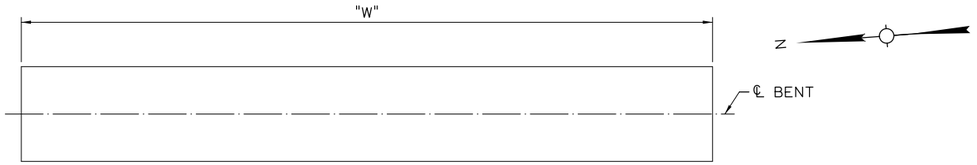

CAP PLAN
SCALE: 1/4" = 1'-0"

BENT DIMENSION			
BENT NO.	"H"	"W"	"S"
1	38'-8"	33'-4"	19'-4"

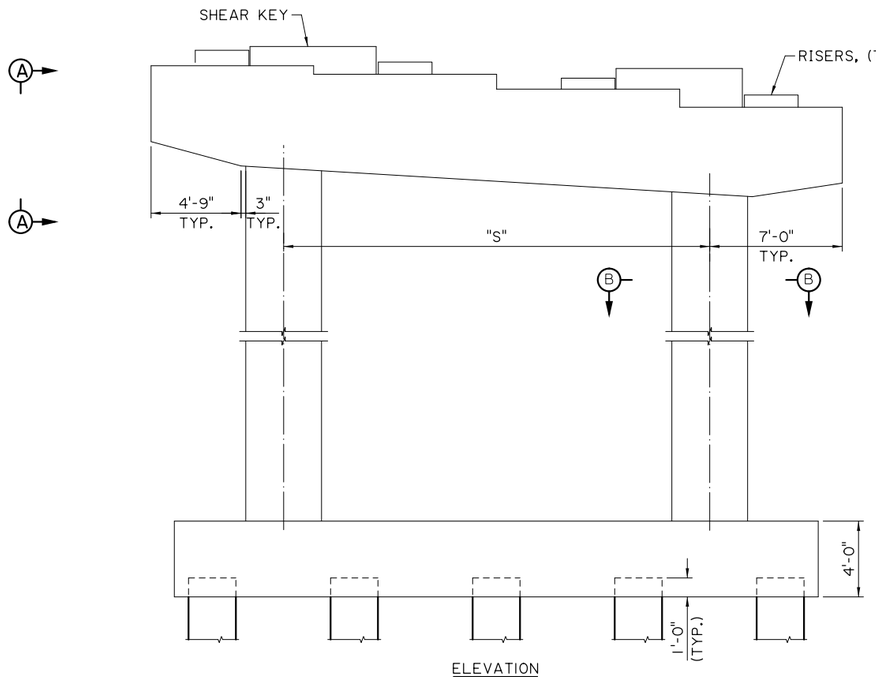

ELEVATION
SCALE: 1/4" = 1'-0"

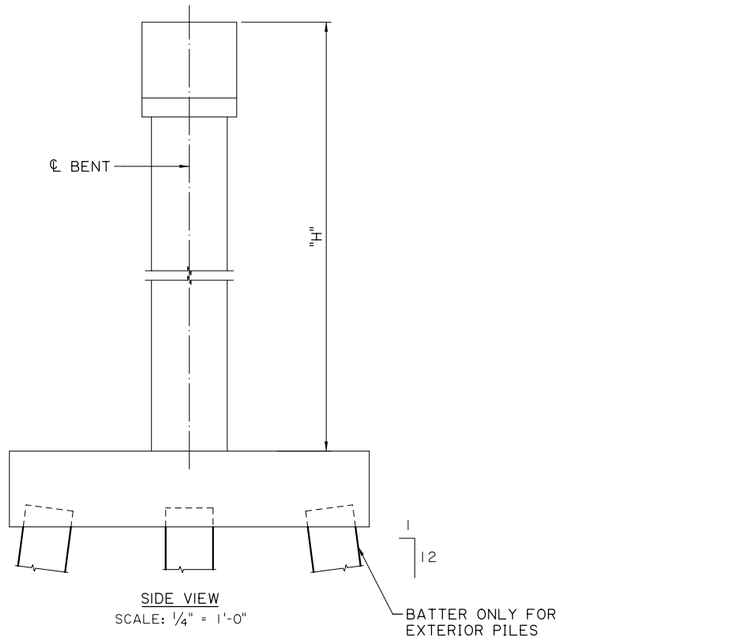

SIDE VIEW
SCALE: 1/4" = 1'-0"

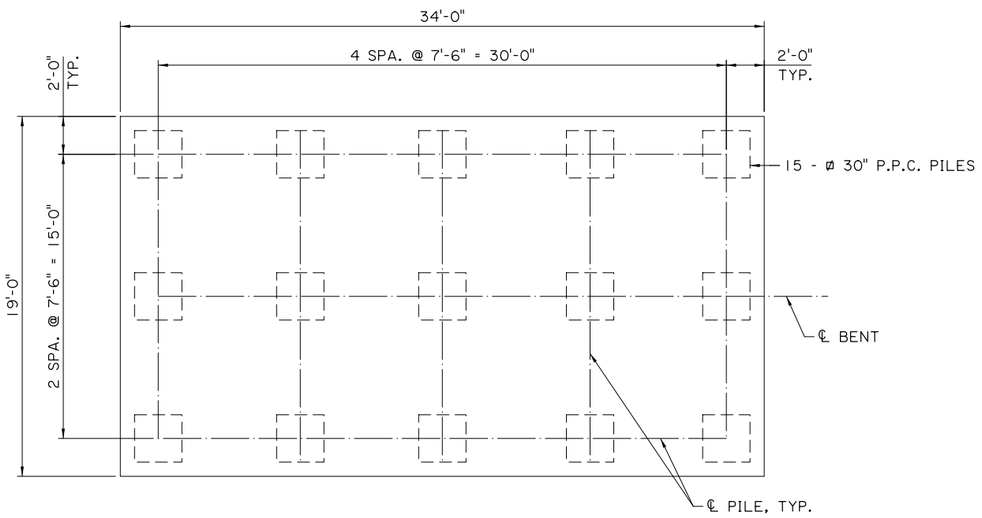

FOOTING PLAN
SCALE: 1/4" = 1'-0"

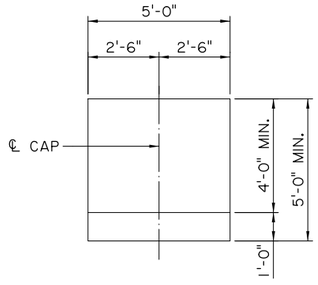

VIEW A-A
SCALE: 3/8" = 1'-0"

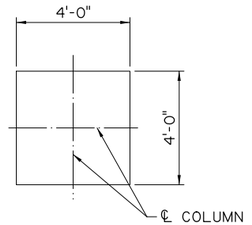

SECTION B-B
SCALE: 3/8" = 1'-0"

SHEET NUMBER 131

PARISH	CONTROL SECTION	STATE PROJECT
CALCASIEU	450-91	H.003931

DESIGN	CHECK	DETAIL	CHECK	REVIEW	SERIES
SGC	CML	KNP	SGC		1 OF 3

TECHNICAL PROPOSAL PLANS
PRELIMINARY
NOT FOR CONSTRUCTION
ENGINEER:
ROBERT M. GRAY
LICENSE #:
45611
DATE:
5/25/23

NO.	DATE	REVISION OR CHANGE ORDER DESCRIPTION	BY

STATE OF LOUISIANA
DEPARTMENT OF TRANSPORTATION AND DEVELOPMENT

B-9 MILLER AVE. RAMP TO SAMPSON ST. OVER UPRR

BENT DETAILS

I-10 CALCASIEU RIVER BRIDGE IMPROVEMENTS

DOTD
LOUISIANA DEPARTMENT OF TRANSPORTATION & DEVELOPMENT

CBP
CALCASIEU BRIDGE PARTNERS

TECHNICAL PROPOSAL PLANS
5/25/2023 2:43:01 PM
Z:\Shared\1370 - I-10 Calcasieu P3\DWGS\BRIDGE\B9 - Miller Ave. ramp R14 to Sampson St over UPRR Spur\B9 - 01_08.dgn

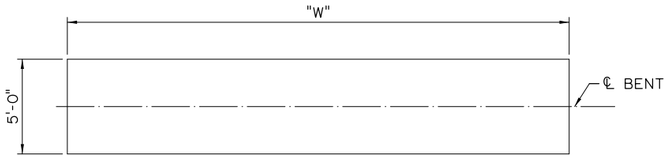

ELEVATION
SCALE: 1/4" = 1'-0"

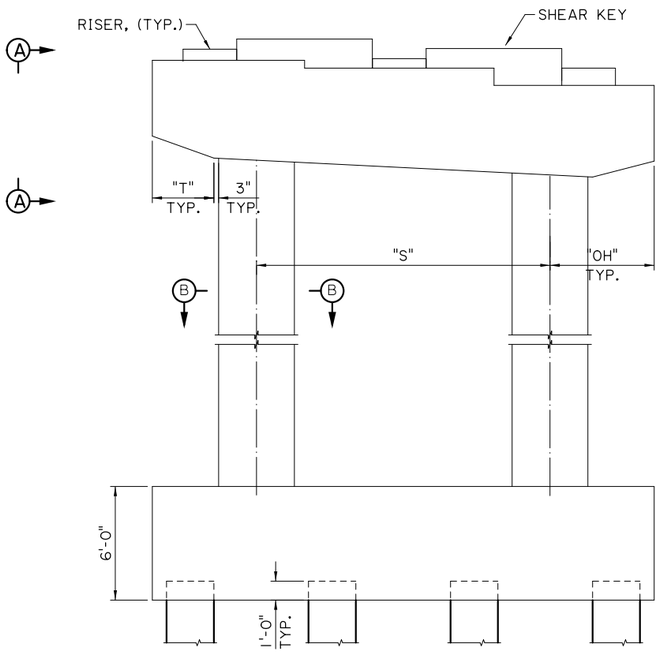

ELEVATION
SCALE: 1/4" = 1'-0"

BENT DIMENSION				
BENT NO.	"H"	"W"	"OH"	"T"
2	39'-2"	31'-9"	8'-1 1/2"	5'-10 1/2"
3	38'-9"	28'-4"	6'-7"	4'-2"
4	38'-5"	26'-6"	5'-6"	3'-3"
5	39'-9"	26'-6"	5'-6"	3'-3"
6	38'-4"	26'-6"	5'-6"	3'-3"
7	35'-5"	26'-6"	5'-6"	3'-3"
8	32'-1"	26'-6"	5'-6"	3'-3"
9	30'-2"	26'-6"	5'-6"	3'-3"
10	25'-11"	26'-6"	5'-6"	3'-3"

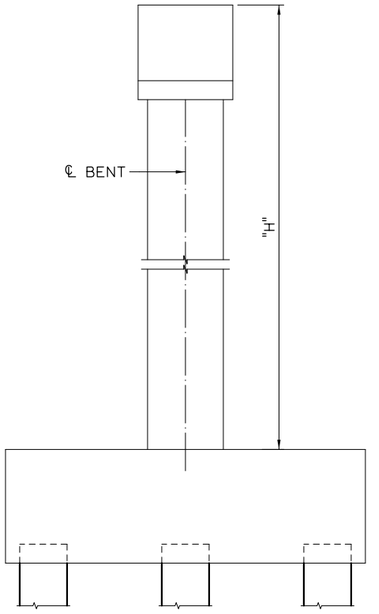

SIDE VIEW
SCALE: 1/4" = 1'-0"

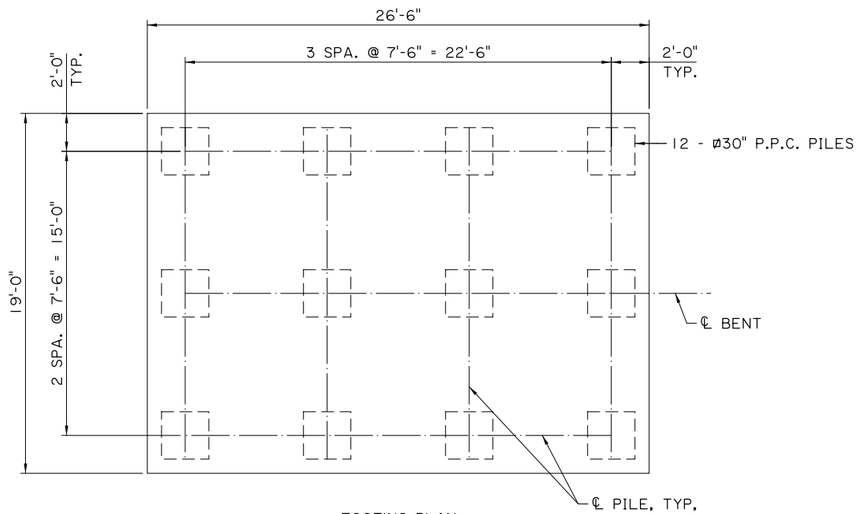

FOOTING PLAN
SCALE: 1/4" = 1'-0"

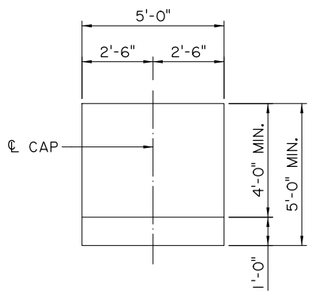

VIEW A-A
SCALE: 3/8" = 1'-0"

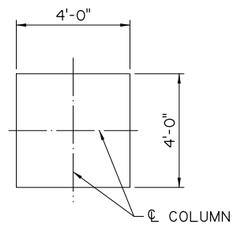

SECTION B-B
SCALE: 3/8" = 1'-0"

SHEET NUMBER 132

PARISH	CONTROL SECTION	STATE PROJECT
CALCASIEU	450-91	H.003931

DESIGN	CHECK	DETAIL	CHECK	REVIEW	SERIES #
SGC	CML	KNP	SGC		2 OF 3

TECHNICAL PROPOSAL PLANS
PRELIMINARY
NOT FOR CONSTRUCTION
ENGINEER:
ROBERT M. GRAY
LICENSE #: 45611
DATE: 5/25/23

NO.	DATE	REVISION OR CHANGE ORDER DESCRIPTION	BY

B-9 MILLER AVE. RAMP TO SAMPSON ST. OVER UPRR

BENT DETAILS

I-10 CALCASIEU RIVER BRIDGE IMPROVEMENTS

DOTD LOUISIANA DEPARTMENT OF TRANSPORTATION & DEVELOPMENT

CBP CALCASIEU BRIDGE PARTNERS

TECHNICAL PROPOSAL PLANS
5/25/2023 2:43:03 PM
Z:\Shared\1370 - I-10 Calcasieu P3\DWGS\BRIDGE\B9 - Miller Ave. ramp R14 to Sampson St over UPRR Spur\B9 - 01_08.dgn

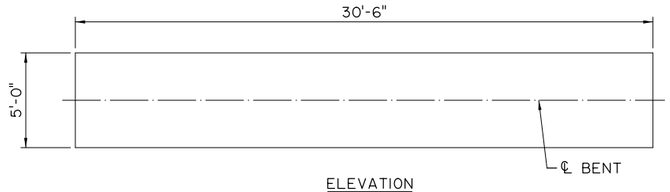

ELEVATION
SCALE: 1/4" = 1'-0"

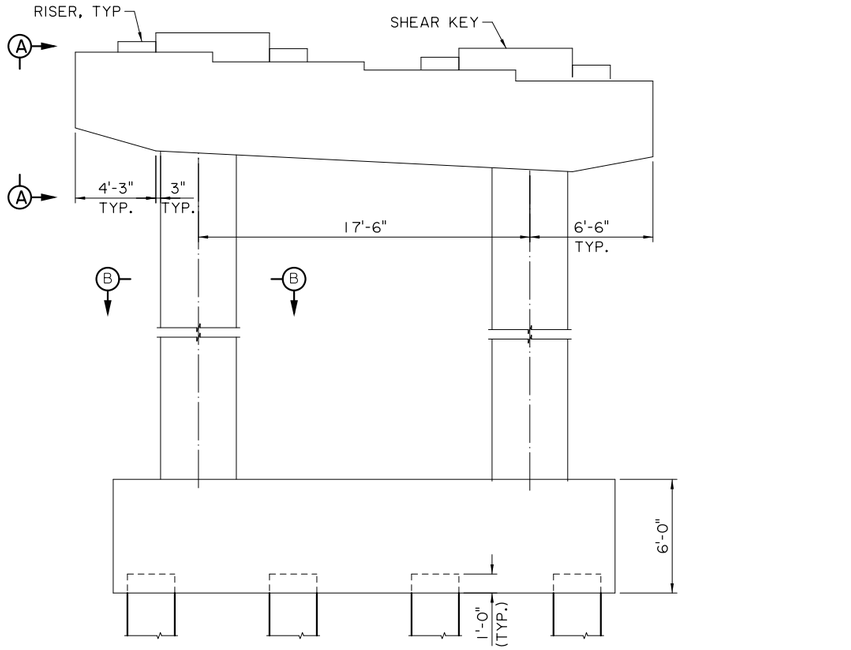

ELEVATION
SCALE: 1/4" = 1'-0"

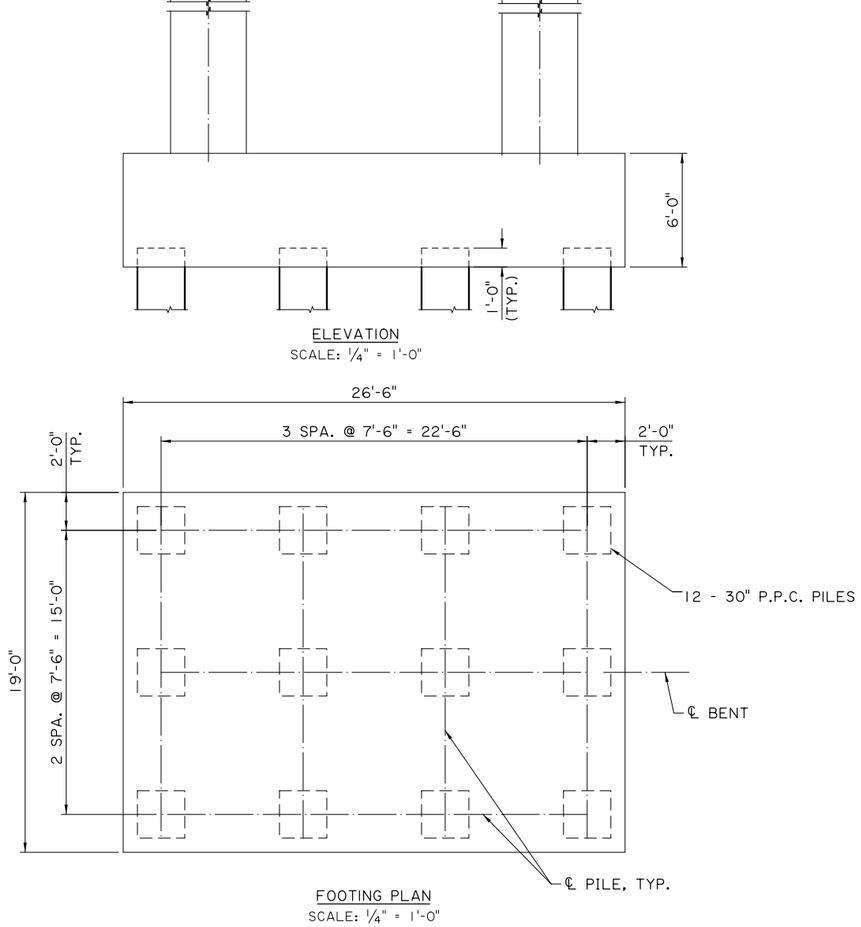

FOOTING PLAN
SCALE: 1/4" = 1'-0"

BENT DIMENSION	
BENT NO.	"H"
11	22'-4"
12	22'-5"
13	17'-2"
14	13'-4"

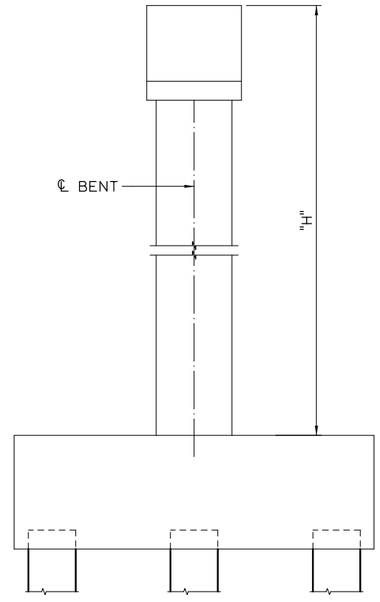

SIDE VIEW
SCALE: 1/4" = 1'-0"

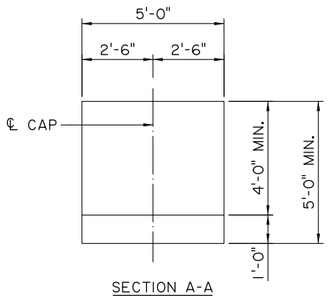

SECTION A-A
SCALE: 3/8" = 1'-0"

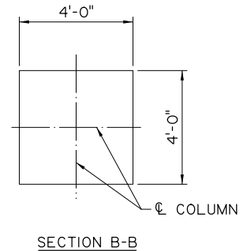

SECTION B-B
SCALE: 3/8" = 1'-0"

SHEET NUMBER	133

PARISH	CONTROL SECTION	STATE PROJECT
CALCASIEU	450-91	H.003931

DESIGN	CHECK	DETAIL	CHECK	REVIEW	SERIES #
SGC	CML	KNP	SGC		3 OF 3

TECHNICAL PROPOSAL PLANS
PRELIMINARY
NOT FOR CONSTRUCTION
ENGINEER:
ROBERT M. GRAY
LICENSE #:
45611
DATE:
5/25/23

NO.	DATE	REVISION OR CHANGE ORDER DESCRIPTION	BY

STATE OF LOUISIANA
JOHN BEL EDWARDS
GOVERNOR

B-9 MILLER AVE. RAMP TO SAMPSON ST. OVER UPRR

BENT DETAILS

I-10 CALCASIEU RIVER BRIDGE IMPROVEMENTS

DOTD
LOUISIANA DEPARTMENT OF TRANSPORTATION & DEVELOPMENT

CBP
CALCASIEU BRIDGE PARTNERS

TECHNICAL PROPOSAL PLANS
5/25/2023 2:47:51 PM
Z:\Shared\1370 - I-10 Calcasieu P3\DWGS\BRIDGE\B10A - I10 over Relocated Pipes\B10A_1-7.dgn

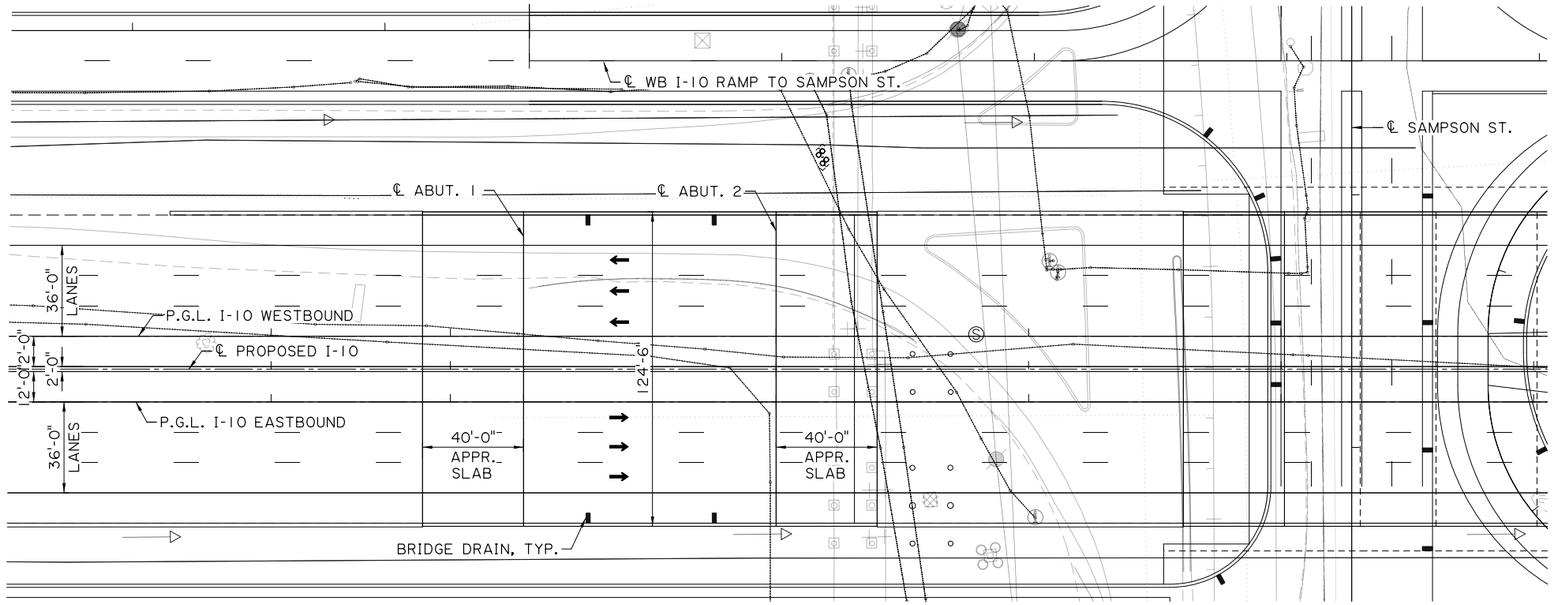

GENERAL PLAN
SCALE: 1" = 30'

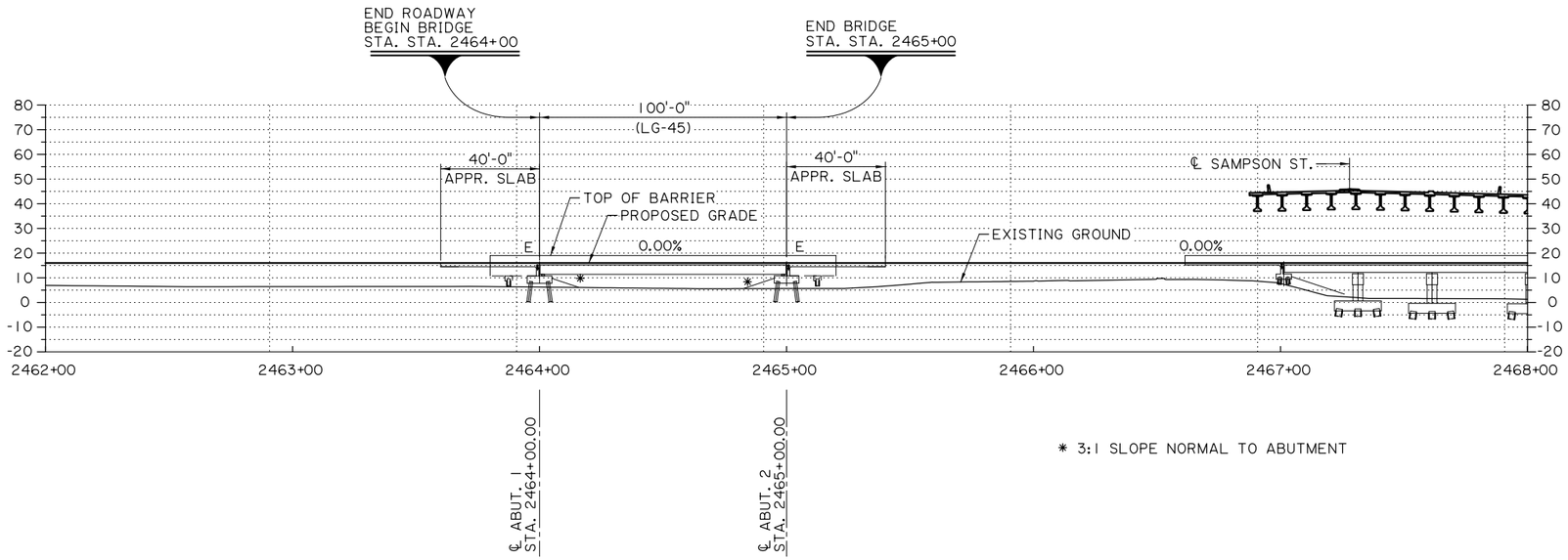

✱ 3:1 SLOPE NORMAL TO ABUTMENT

ELEVATION
SCALE: 1" = 30'

SHEET NUMBER 134

PARISH	CONTROL SECTION	STATE PROJECT
CALCASIEU	450-91	H.003931
2469+00		

DESIGN	CHECK	DETAIL	CHECK	REVIEW	SERIES
CRS	CML	KNP	CRS		1 OF 1

TECHNICAL PROPOSAL PLANS
PRELIMINARY
NOT FOR CONSTRUCTION
ENGINEER:
ROBERT M. GRAY
LICENSE #: 45611
DATE: 5/25/23

NO.	DATE	REVISION OR CHANGE ORDER DESCRIPTION	BY

B-10A I-10 OVER RELOCATED PIPE RACK
GENERAL PLAN AND ELEVATION
I-10 CALCASIEU RIVER BRIDGE IMPROVEMENTS

DOTD LOUISIANA DEPARTMENT OF TRANSPORTATION & DEVELOPMENT
CBP CALCASIEU BRIDGE PARTNERS

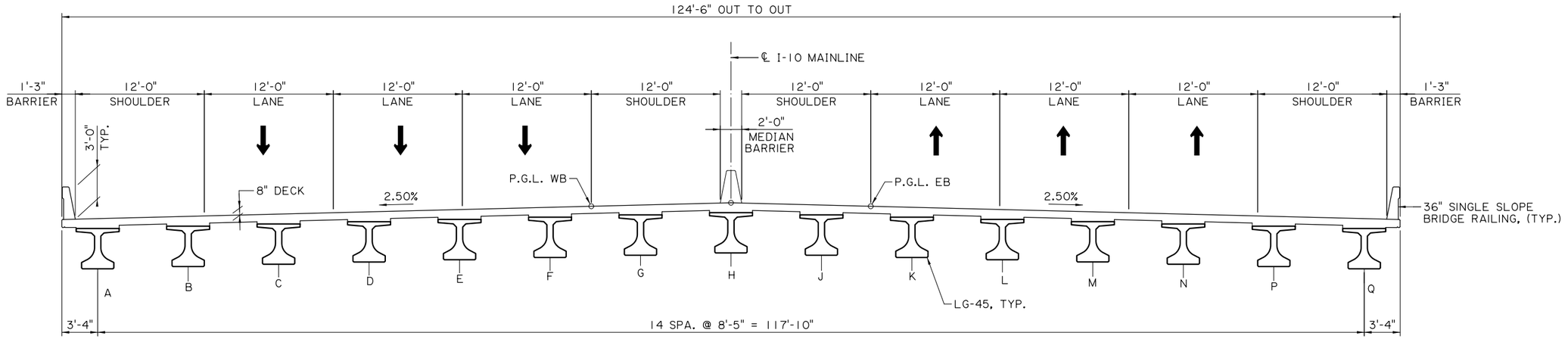

TYPICAL SECTION
SCALE: 3/16" = 1'-0"

TECHNICAL PROPOSAL PLANS

5/25/2023 2:47:59 PM

Z:\Shared\1370 - I-10 Calcasieu P3\DWGS\BRIDGE\B10A - I10 over Relocated Pipes\B10A_1-7.dgn

SHEET NUMBER 135

PARISH	CONTROL SECTION	STATE PROJECT
CALCASIEU	450-91	H.003931

DESIGN	CHECK	DETAIL	CHECK	REVIEW	SERIES
CRS	CML	KNP	CRS		1 OF 1

TECHNICAL PROPOSAL PLANS

PRELIMINARY
NOT FOR CONSTRUCTION
ENGINEER: ROBERT M. GRAY
LICENSE #: 45611
DATE: 5/25/23

NO.	DATE	REVISION OR CHANGE ORDER DESCRIPTION	BY

B-10A I-10 OVER RELOCATED PIPE RACK

TYPICAL SECTION

I-10 CALCASIEU RIVER BRIDGE IMPROVEMENTS

DOTD LOUISIANA DEPARTMENT OF TRANSPORTATION & DEVELOPMENT

CBP CALCASIEU BRIDGE PARTNERS

TECHNICAL PROPOSAL PLANS
5/25/2023 2:47:59 PM
Z:\Shared\1370 - I-10 Calcasieu P3\DWGS\BRIDGE\B10A - I10 over Relocated Pipes\B10A_1-7.dgn

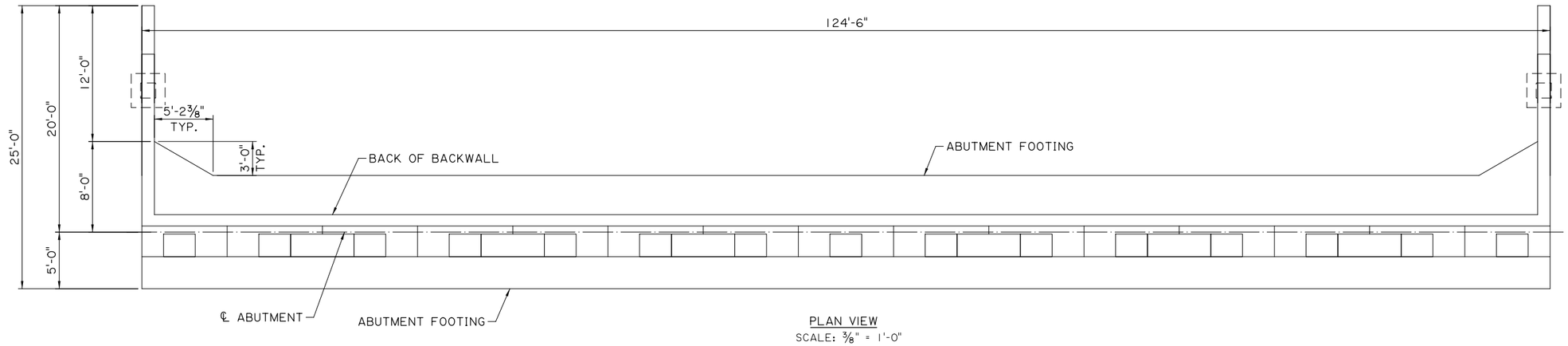

PLAN VIEW
SCALE: 3/8" = 1'-0"

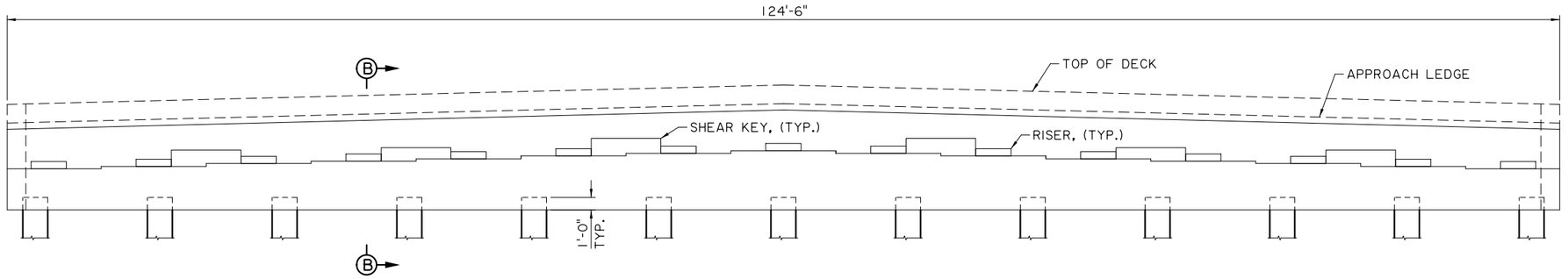

ELEVATION
SCALE: 3/8" = 1'-0"

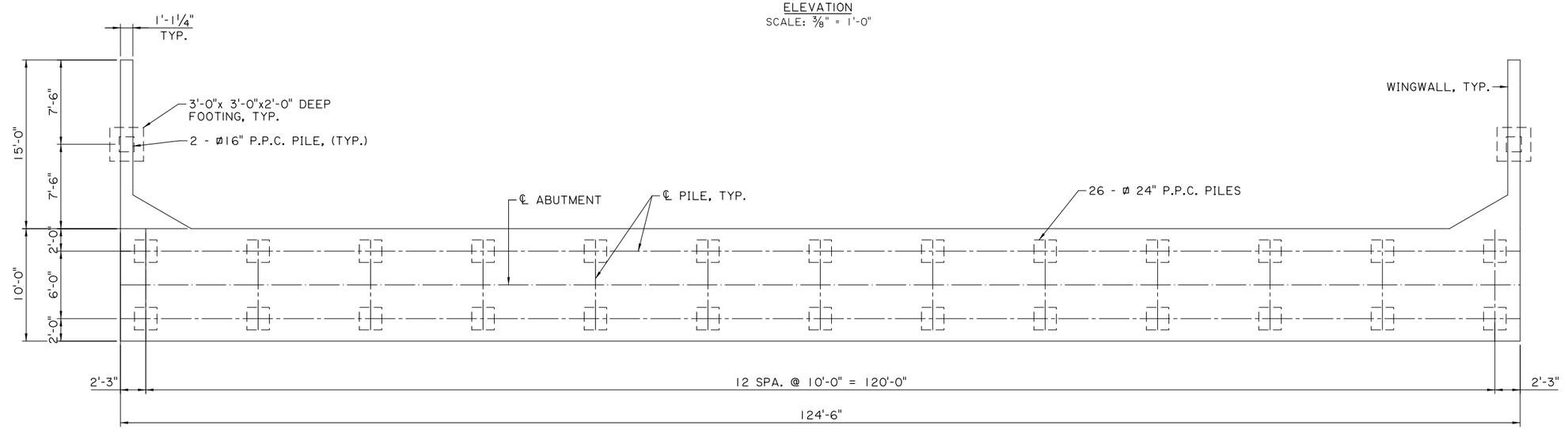

FOOTING PLAN
SCALE: 3/8" = 1'-0"

SHEET NUMBER	136

PARISH	CONTROL SECTION	STATE PROJECT
CALCASIEU	450-91	H.003931

DESIGN	CHECK	DETAIL	CHECK	REVIEW	SERIES # 1 OF 2
CRS	CML	KNP	CRS		

TECHNICAL PROPOSAL PLANS
PRELIMINARY
NOT FOR CONSTRUCTION
ENGINEER:
ROBERT M. GRAY
LICENSE #:
45611
DATE:
5/25/23

NO.	DATE	REVISION OR CHANGE ORDER DESCRIPTION	BY

B-10A I-10 OVER RELOCATED PIPE RACK
ABUTMENT DETAILS
I-10 CALCASIEU RIVER BRIDGE IMPROVEMENTS

LOUISIANA DEPARTMENT OF TRANSPORTATION & DEVELOPMENT
CALCASIEU BRIDGE PARTNERS

TECHNICAL PROPOSAL PLANS
5/25/2023 2:47:59 PM
Z:\Shared\1370 - I-10 Calcasieu P3\DWGS\BRIDGE\B10A - I10 over Relocated Pipes\B10A_1-7.dgn

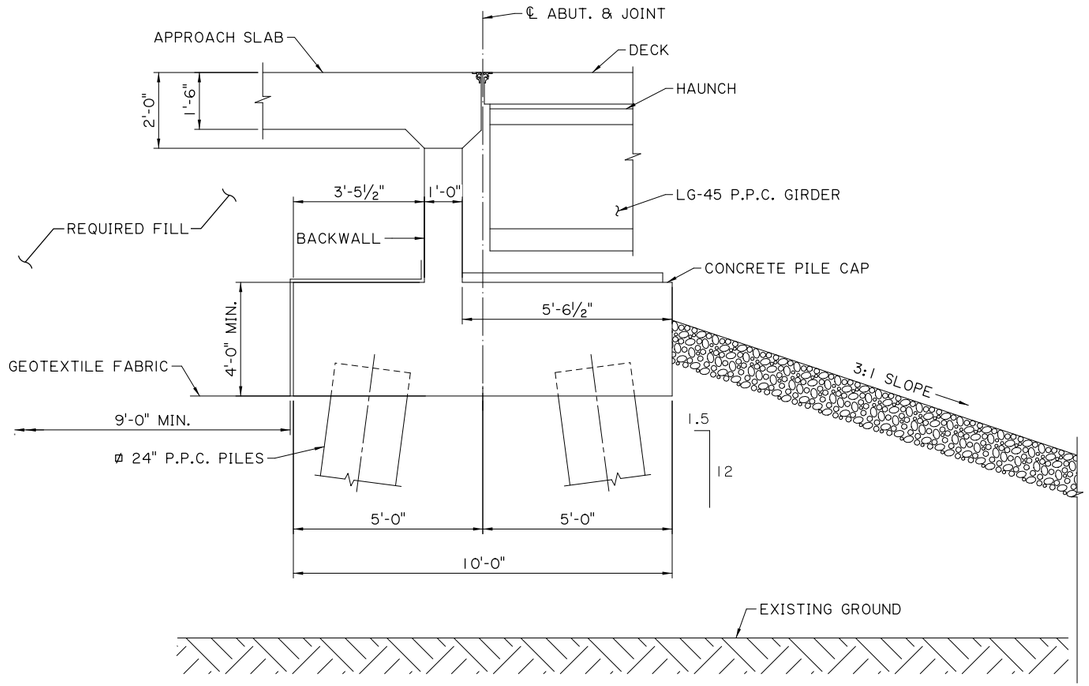

SECTION B-B
SCALE: ½" = 1'-0"

SHEET NUMBER	137

PARISH	CONTROL SECTION	STATE PROJECT
CALCASIEU	450-91	H.003931

DESIGN	CHECK	DETAIL	CHECK	REVIEW	SERIES #
CRS	CML	KNP	CRS		2 OF 2

TECHNICAL PROPOSAL PLANS
PRELIMINARY
NOT FOR CONSTRUCTION
ENGINEER:
ROBERT M. GRAY
LICENSE #:
45611
DATE:
5/25/23

NO.	DATE	REVISION OR CHANGE ORDER DESCRIPTION	BY

B-10A I-10 OVER RELOCATED PIPE RACK
ABUTMENT DETAILS

I-10 CALCASIEU RIVER BRIDGE IMPROVEMENTS

LOUISIANA DEPARTMENT OF TRANSPORTATION & DEVELOPMENT

CALCASIEU BRIDGE PARTNERS

TECHNICAL PROPOSAL PLANS
5/25/2023 2:44:51 PM
Z:\Shared\1370 - I-10 Calcasieu P3\DWGS\BRIDGE\B10 - I10 over Calcasieu River\B10 -01- 04.dgn

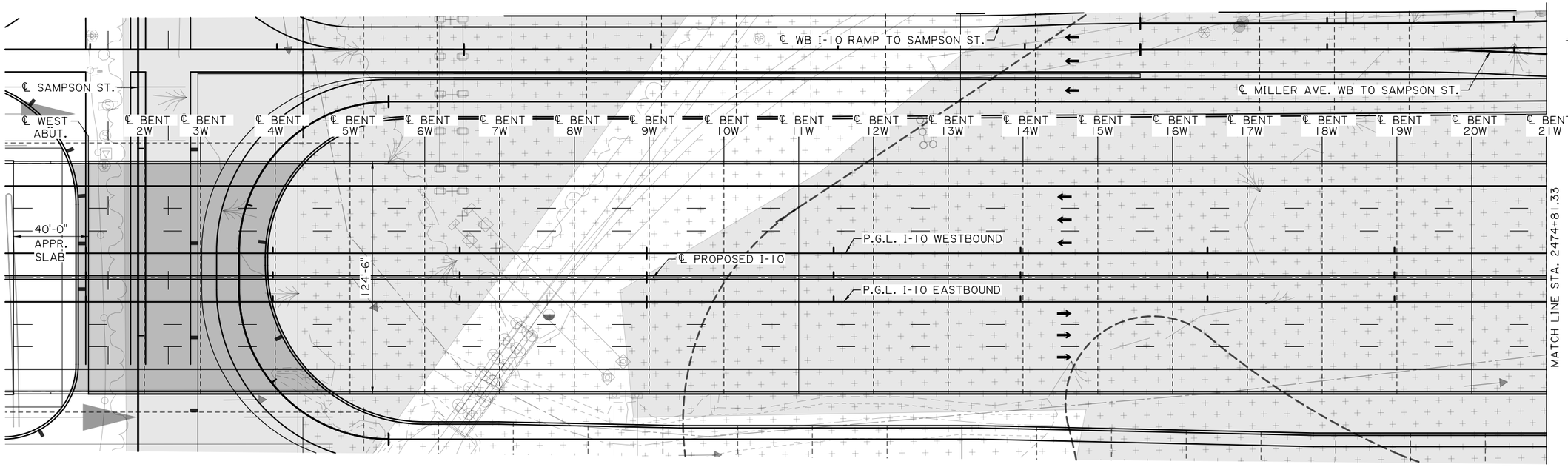

GENERAL PLAN
SCALE: 1" = 30'

660' VERTICAL CURVE
P.V.I. 2471+84.65
ELEV. 16.00
G_1 = 0.00%
G_2 = 3.00%

WETLANDS

EDC AREA

END ROADWAY
BEGIN BRIDGE
STA. STA. 2467+01.33

6609'-8" TOTAL BRIDGE LENGTH

380'-0" UNIT
(10 SIMPLE SPANS WITH CONTINUOUS DECK) (LG-36)

360'-0" UNIT
(9 SIMPLE SPANS WITH CONTINUOUS DECK) (LG-36)

360'-0" UNIT

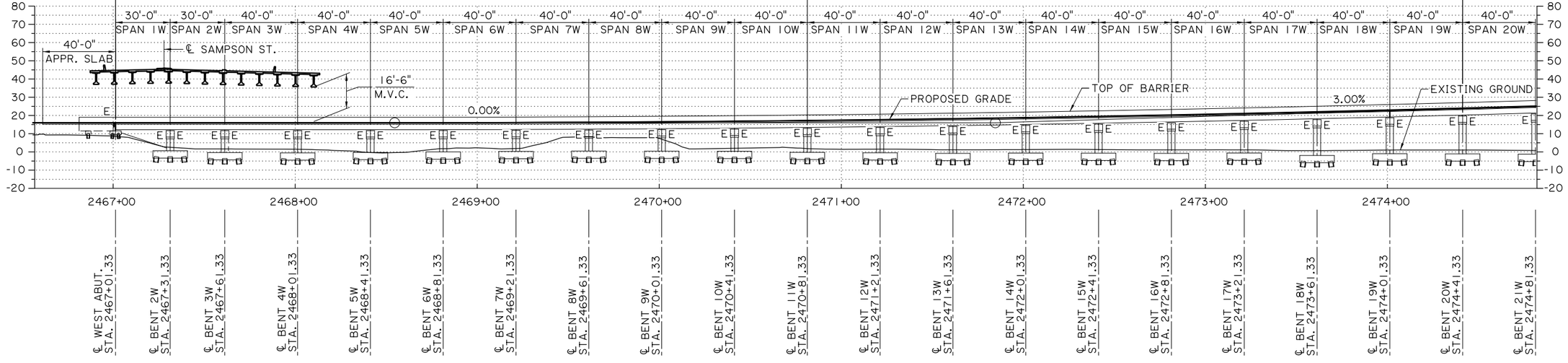

ELEVATION
SCALE: 1" = 30'

SHEET NUMBER	138
PARISH: CALCASIEU	CONTROL SECTION: 450-91
STATE PROJECT: H.003931	
DESIGN: JJB	DETAIL: KNP
CHECK: CML	CHECK: JJB
REVIEW	SERIES # 1 OF 4

TECHNICAL PROPOSAL PLANS
PRELIMINARY
NOT FOR CONSTRUCTION
ENGINEER: ROBERT M. GRAY
LICENSE #: 45611
DATE: 5/25/23

NO.	DATE	REVISION OR CHANGE ORDER DESCRIPTION	BY

STATE OF LOUISIANA — LICENSED PROFESSIONAL ENGINEER — CERTIFIED

B-10 WEST APPROACH SPAN

GENERAL PLAN AND ELEVATION

I-10 CALCASIEU RIVER BRIDGE IMPROVEMENTS

DOTD LOUISIANA DEPARTMENT OF TRANSPORTATION & DEVELOPMENT

CBP CALCASIEU BRIDGE PARTNERS

TECHNICAL PROPOSAL PLANS
5/25/2023 2:44:53 PM
Z:\Shared\1370 - I-10 Calcasieu P3\DWGS\BRIDGE\B10 - I10 over Calcasieu River\B10 -01- 04.dgn

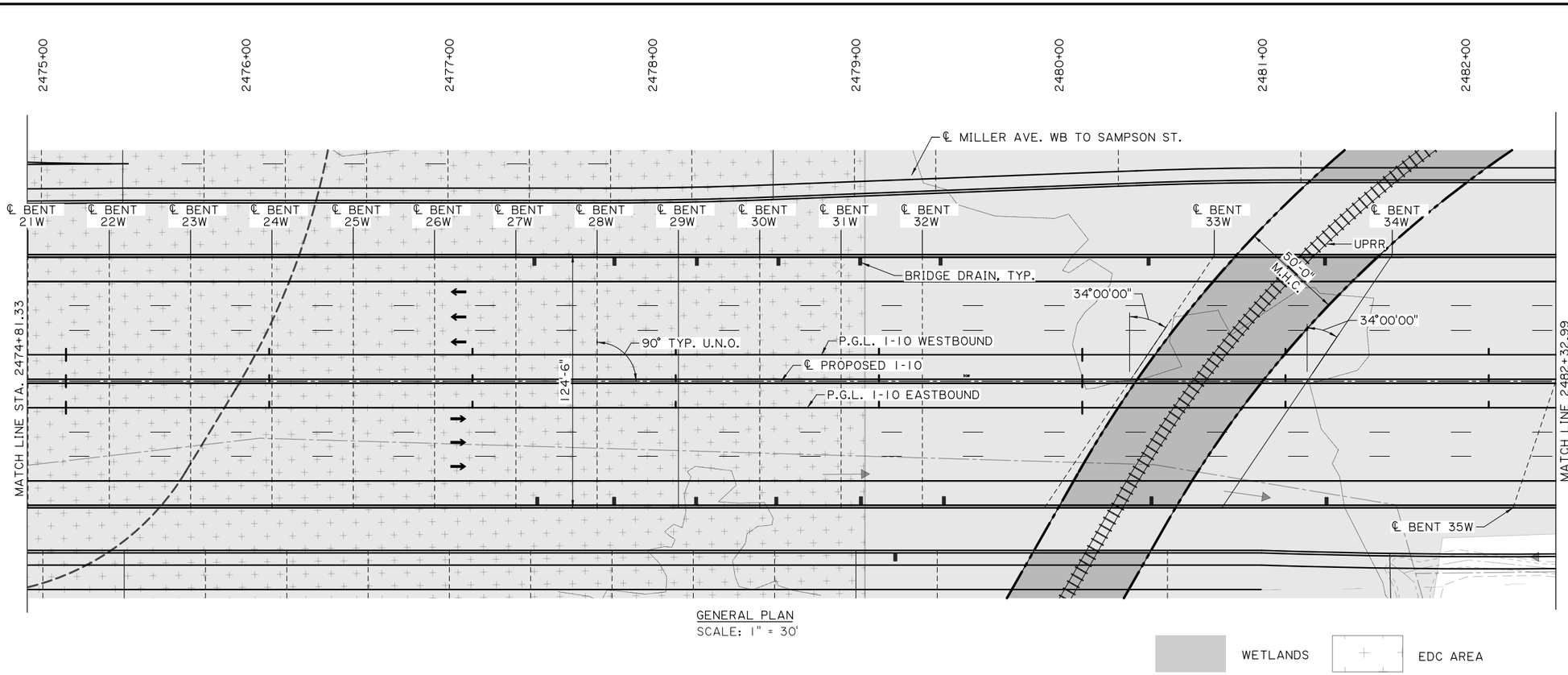

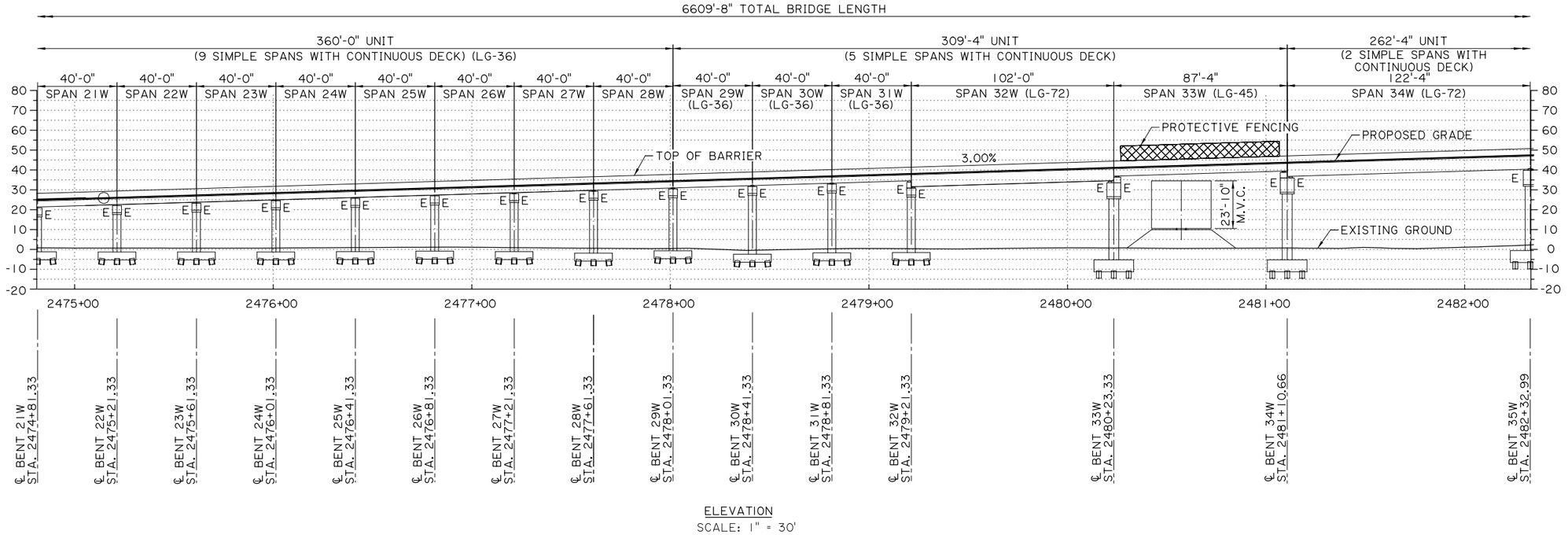

N

SHEET NUMBER	139
PARISH: CALCASIEU	CONTROL SECTION: 450-91	STATE PROJECT: H.003931
DESIGN: JJB	CHECK: CML	DETAIL: KNP	CHECK: JJB	REVIEW	SERIES: 2 OF 4

TECHNICAL PROPOSAL PLANS
PRELIMINARY
NOT FOR CONSTRUCTION
ENGINEER: ROBERT M. GRAY
LICENSE #: 45611
DATE: 5/25/23

NO.	DATE	REVISION OR CHANGE ORDER DESCRIPTION	BY

STATE OF LOUISIANA — LICENSED PROFESSIONAL ENGINEER — CERTIFIED

B-10 WEST APPROACH SPAN
GENERAL PLAN AND ELEVATION

I-10 CALCASIEU RIVER BRIDGE IMPROVEMENTS

DOTD LOUISIANA DEPARTMENT OF TRANSPORTATION & DEVELOPMENT

CBP CALCASIEU BRIDGE PARTNERS

TECHNICAL PROPOSAL PLANS
5/25/2023 2:44:56 PM
Z:\Shared\1370 - I-10 Calcasieu P3\DWGS\BRIDGE\B10 - I10 over Calcasieu River\B10 -01- 04.dgn

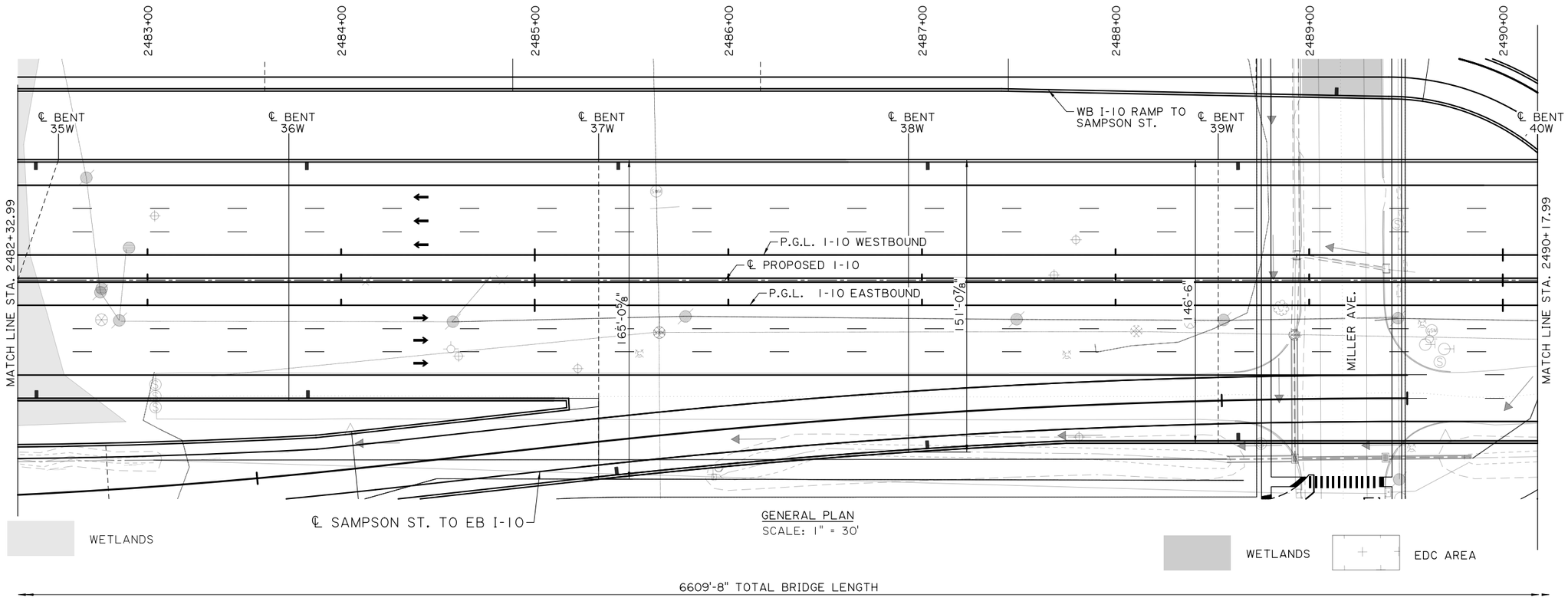

SHEET NUMBER	140
PARISH	CALCASIEU
CONTROL SECTION	450-91
STATE PROJECT	H.003931
DESIGN JJB / CML	DETAIL KNP / CHECK JJB
REVIEW	SERIES 3 OF 4

TECHNICAL PROPOSAL PLANS
PRELIMINARY
NOT FOR CONSTRUCTION
ENGINEER: ROBERT M. GRAY
LICENSE #: 45611
DATE: 5/25/23

NO.	DATE	REVISION OR CHANGE ORDER DESCRIPTION	BY

B-10 WEST APPROACH SPAN

GENERAL PLAN AND ELEVATION

I-10 CALCASIEU RIVER BRIDGE IMPROVEMENTS

LOUISIANA DEPARTMENT OF TRANSPORTATION & DEVELOPMENT

CALCASIEU BRIDGE PARTNERS

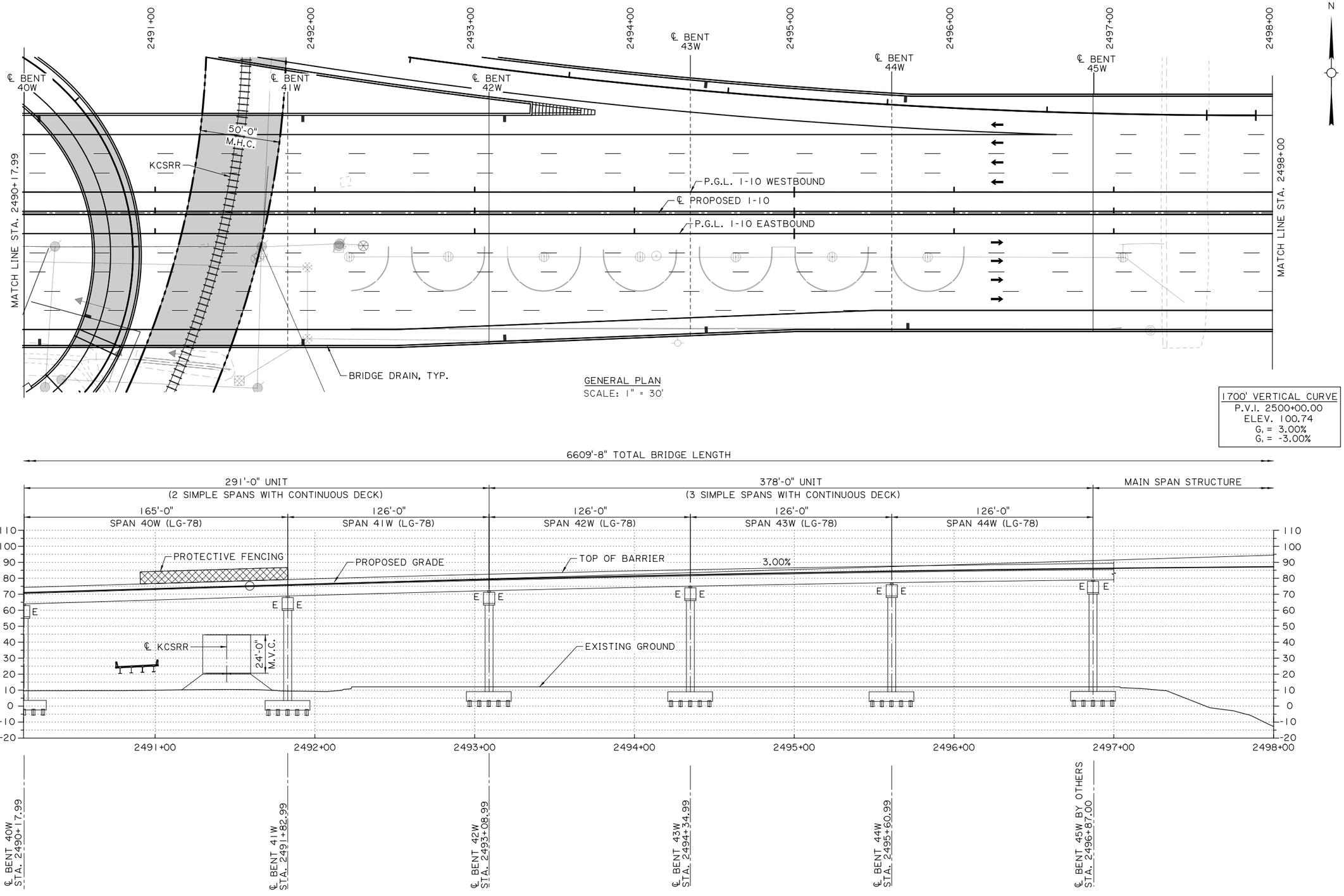

GENERAL PLAN
SCALE: 1" = 30'

1700' VERTICAL CURVE
P.V.I. 2500+00.00
ELEV. 100.74
G_1 = 3.00%
G_1 = -3.00%

ELEVATION
SCALE: 1" = 30'

TECHNICAL PROPOSAL PLANS

Z:\Shared\1370 - I-10 Calcasieu P3\DWGS\BRIDGE\B10 - I10 over Calcasieu River\B10 -01- 04.dgn

5/25/2023 2:45:30 PM

SHEET NUMBER 141

PARISH: CALCASIEU
CONTROL SECTION: 450-91
STATE PROJECT: H.003931

DESIGN: JJB
CHECK: CML
DETAIL: KNP
CHECK: JJB
REVIEW:
SERIES #: 4 OF 4

TECHNICAL PROPOSAL PLANS
PRELIMINARY
NOT FOR CONSTRUCTION
ENGINEER: ROBERT M. GRAY
LICENSE #: 45611
DATE: 5/25/23

NO.	DATE	REVISION OR CHANGE ORDER DESCRIPTION	BY

B-10 WEST APPROACH SPAN
GENERAL PLAN AND ELEVATION

I-10 CALCASIEU RIVER BRIDGE IMPROVEMENTS

DOTD
LOUISIANA DEPARTMENT OF TRANSPORTATION & DEVELOPMENT

CBP
CALCASIEU BRIDGE PARTNERS

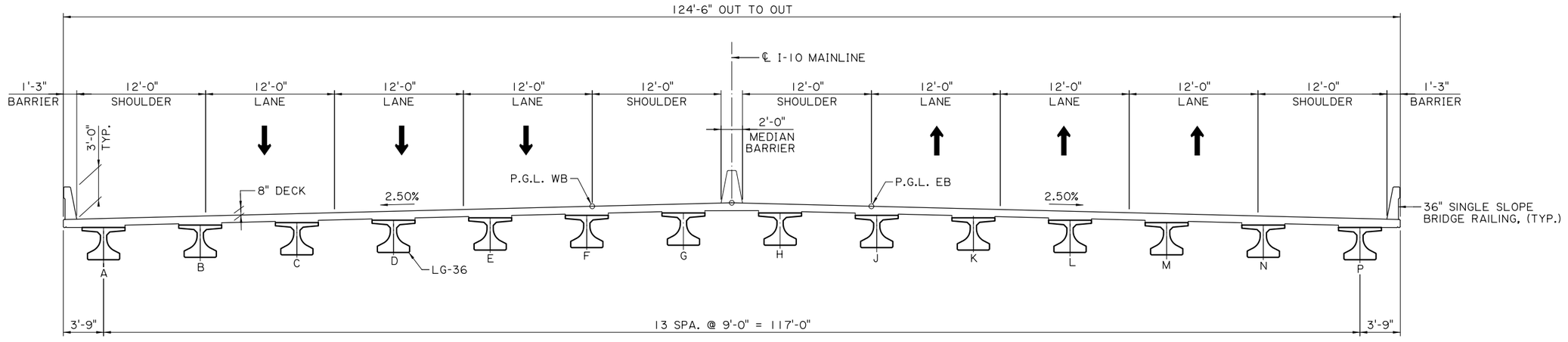

TYPICAL SECTION
(SPANS 1W THROUGH 31W)
SCALE: 3/16" = 1'-0"

TECHNICAL PROPOSAL PLANS

5/25/2023 2:45:46 PM

Z:\Shared\1370 - I-10 Calcasieu P3\DWGS\BRIDGE\B10 - I10 over Calcasieu River\B10 -01- 04.dgn

SHEET NUMBER 142

PARISH	CONTROL SECTION	STATE PROJECT
CALCASIEU	450-91	H.003931

DESIGN	CHECK	DETAIL	CHECK	REVIEW	SERIES # 1 OF 3
JJB	CML	KNP	JJB		

TECHNICAL PROPOSAL PLANS

PRELIMINARY
NOT FOR CONSTRUCTION

ENGINEER:
ROBERT M. GRAY

LICENSE #:
45611

DATE:
5/25/23

NO.	DATE	REVISION OR CHANGE ORDER DESCRIPTION	BY

B-10 WEST APPROACH SPAN

TYPICAL SECTION

I-10 CALCASIEU RIVER BRIDGE IMPROVEMENTS

LOUISIANA DEPARTMENT OF TRANSPORTATION & DEVELOPMENT

CALCASIEU BRIDGE PARTNERS

TECHNICAL PROPOSAL PLANS
5/25/2023 2:45:46 PM
Z:\Shared\1370 - I-10 Calcasieu P3\DWGS\BRIDGE\B10 - I10 over Calcasieu River\B10 -01- 04.dgn

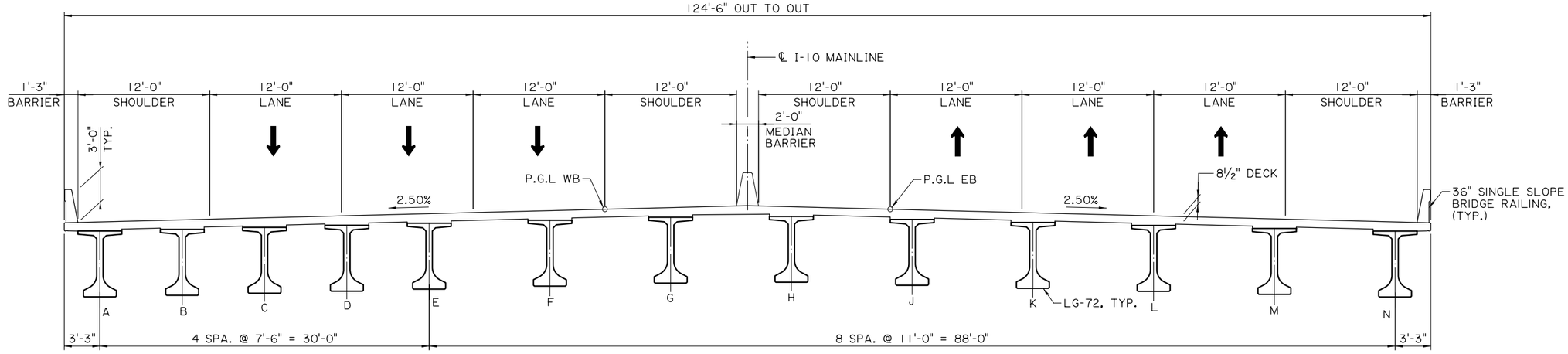

TYPICAL SECTION
(SPAN 32W)
SCALE: 3/16" = 1'-0"

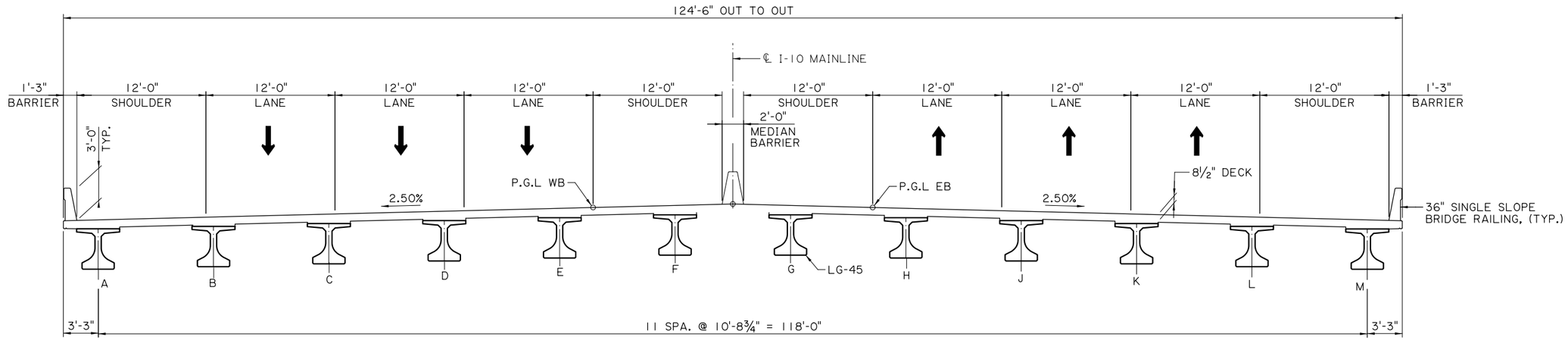

TYPICAL SECTION
(SPAN 33W)
SCALE: 3/16" = 1'-0"

SHEET NUMBER	143
PARISH	CALCASIEU
CONTROL SECTION	450-91
STATE PROJECT	H.003931
DESIGN	JJB
CHECK	CML
DETAIL	KNP
CHECK	JJB
REVIEW	
SERIES #	2 OF 3

TECHNICAL PROPOSAL PLANS
PRELIMINARY
NOT FOR CONSTRUCTION
ENGINEER: ROBERT M. GRAY
LICENSE #: 45611
DATE: 5/25/23

NO.	DATE	REVISION OR CHANGE ORDER DESCRIPTION	BY

STATE OF LOUISIANA — REGISTERED PROFESSIONAL ENGINEER

B-10 WEST APPROACH SPAN

TYPICAL SECTION

I-10 CALCASIEU RIVER BRIDGE IMPROVEMENTS

DOTD LOUISIANA DEPARTMENT OF TRANSPORTATION & DEVELOPMENT

CBP CALCASIEU BRIDGE PARTNERS

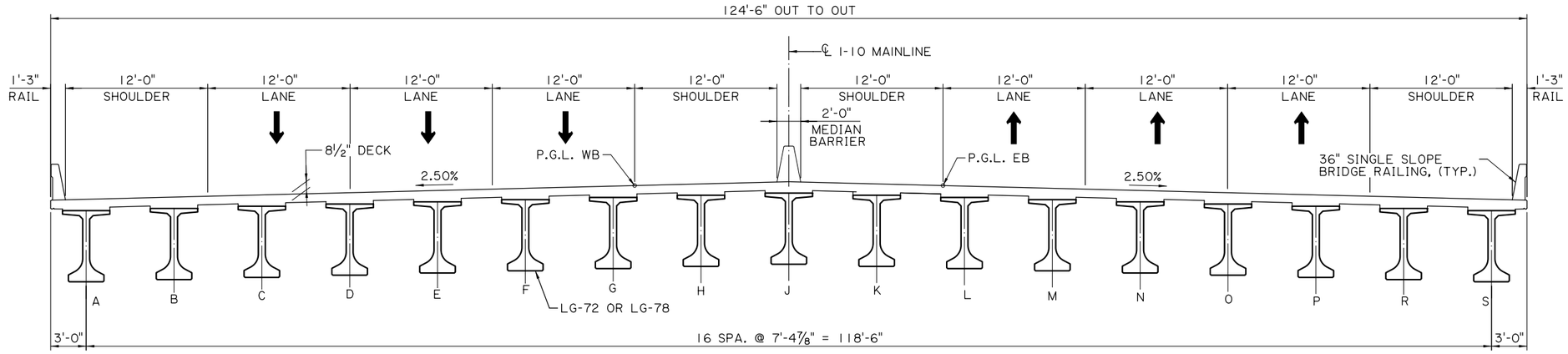

TYPICAL SECTION
(SPANS 34W THRU 36W)
SCALE: 3/16" = 1'-0"

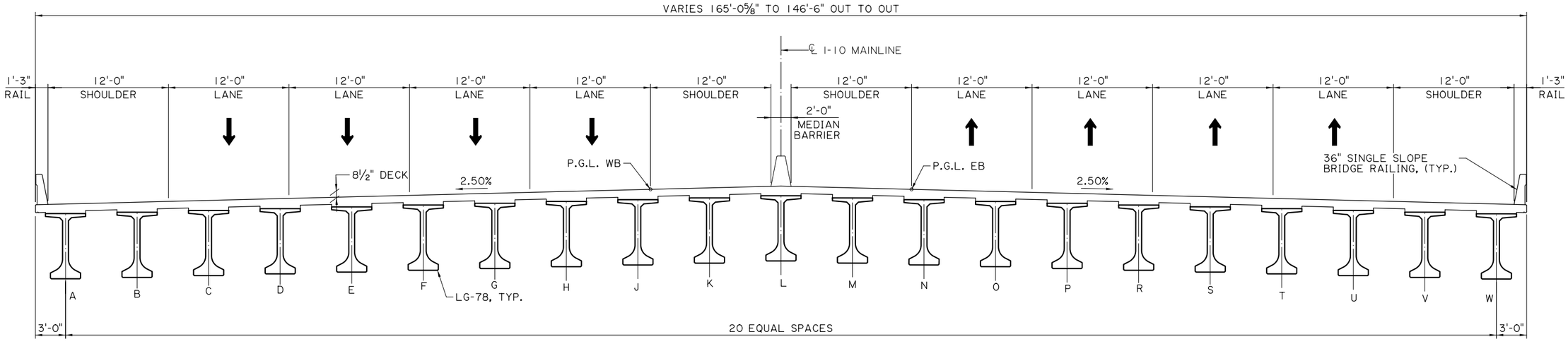

TYPICAL SECTION
(SPANS 37W THRU 44W)
SCALE: 3/16" = 1'-0"

SHEET NUMBER 144

PARISH	CONTROL SECTION	STATE PROJECT
CALCASIEU	450-91	H.003931

DESIGN	CHECK	DETAIL	CHECK	REVIEW	SERIES #
JJB	CML	KNP	JJB		3 OF 3

TECHNICAL PROPOSAL PLANS
PRELIMINARY
NOT FOR CONSTRUCTION
ENGINEER:
ROBERT M. GRAY
LICENSE #: 45611
DATE: 5/25/23

NO.	DATE	REVISION OR CHANGE ORDER DESCRIPTION	BY

STATE OF LOUISIANA
LOUISIANA DEPARTMENT OF TRANSPORTATION AND DEVELOPMENT

B-10 WEST APPROACH SPAN

TYPICAL SECTION

I-10 CALCASIEU RIVER BRIDGE IMPROVEMENTS

DOTD
LOUISIANA DEPARTMENT OF TRANSPORTATION & DEVELOPMENT

CBP
CALCASIEU BRIDGE PARTNERS

TECHNICAL PROPOSAL PLANS

5/25/2023 2:45:46 PM

Z:\Shared\1370 - I-10 Calcasieu P3\DWGS\BRIDGE\B10 - I10 over Calcasieu River\B10 -01- 04.dgn

TECHNICAL PROPOSAL PLANS
5/25/2023 2:45:46 PM
Z:\Shared\1370 - I-10 Calcasieu P3\DWGS\BRIDGE\B10 - I10 over Calcasieu River\B10 -01- 04.dgn

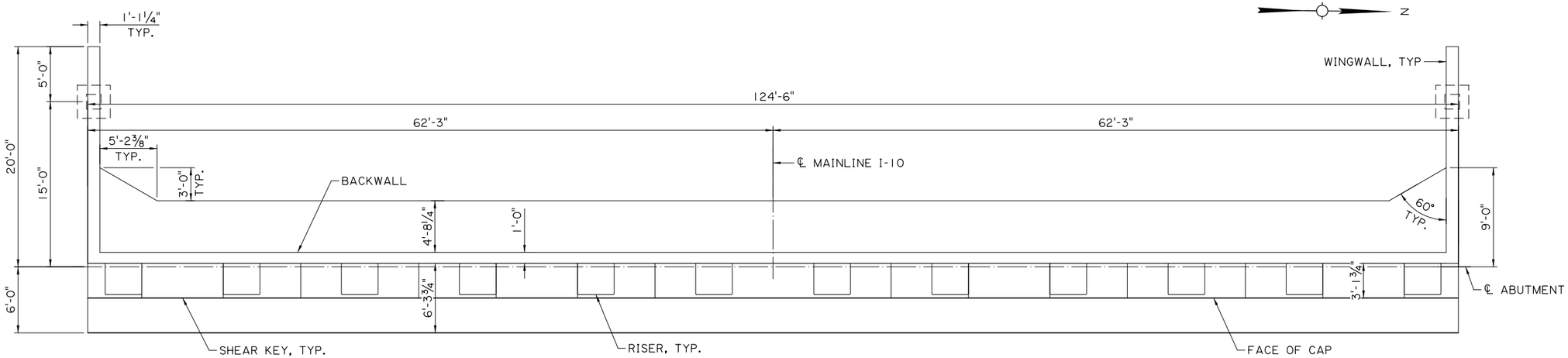

PLAN
SCALE: 3/16" = 1'-0"

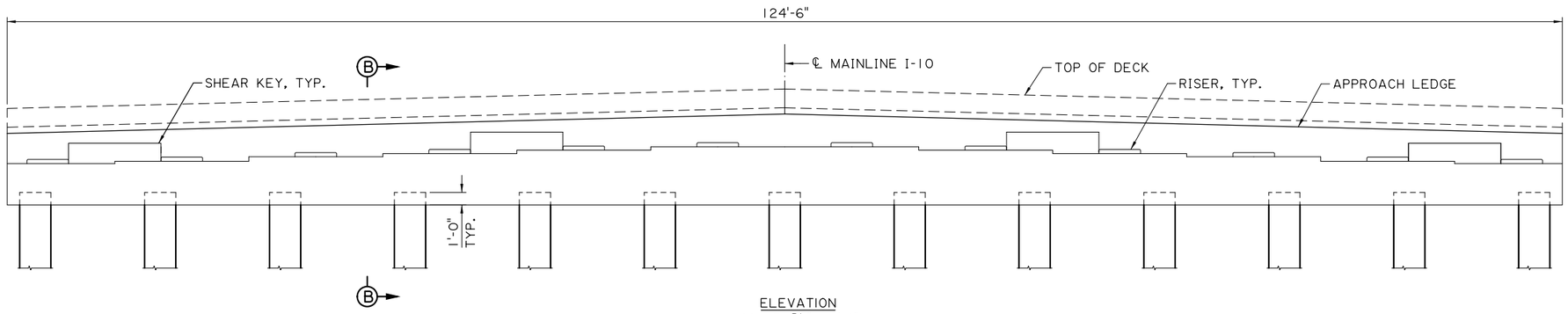

ELEVATION
SCALE: 3/16" = 1'-0"

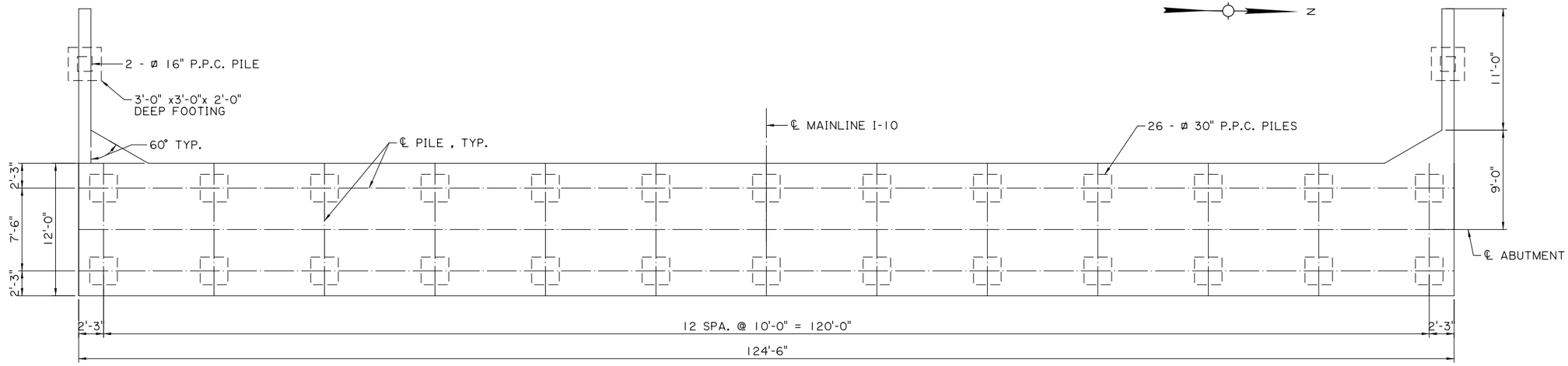

FOOTING PLAN
SCALE: 3/16" = 1'-0"

SHEET NUMBER	145

PARISH	CONTROL SECTION	STATE PROJECT
CALCASIEU	450-91	H.003931

DESIGN	CHECK	DETAIL	CHECK	REVIEW	SERIES #
JJB	CML	KNP	JJB		1 OF 2

TECHNICAL PROPOSAL PLANS
PRELIMINARY
NOT FOR CONSTRUCTION
ENGINEER:
ROBERT M. GRAY
LICENSE #:
45611
DATE:
5/25/23

NO.	DATE	REVISION OR CHANGE ORDER DESCRIPTION	BY

B-10 WEST APPROACH SPAN
ABUTMENT DETAILS

I-10 CALCASIEU RIVER BRIDGE IMPROVEMENTS

DOTD LOUISIANA DEPARTMENT OF TRANSPORTATION & DEVELOPMENT

CBP CALCASIEU BRIDGE PARTNERS

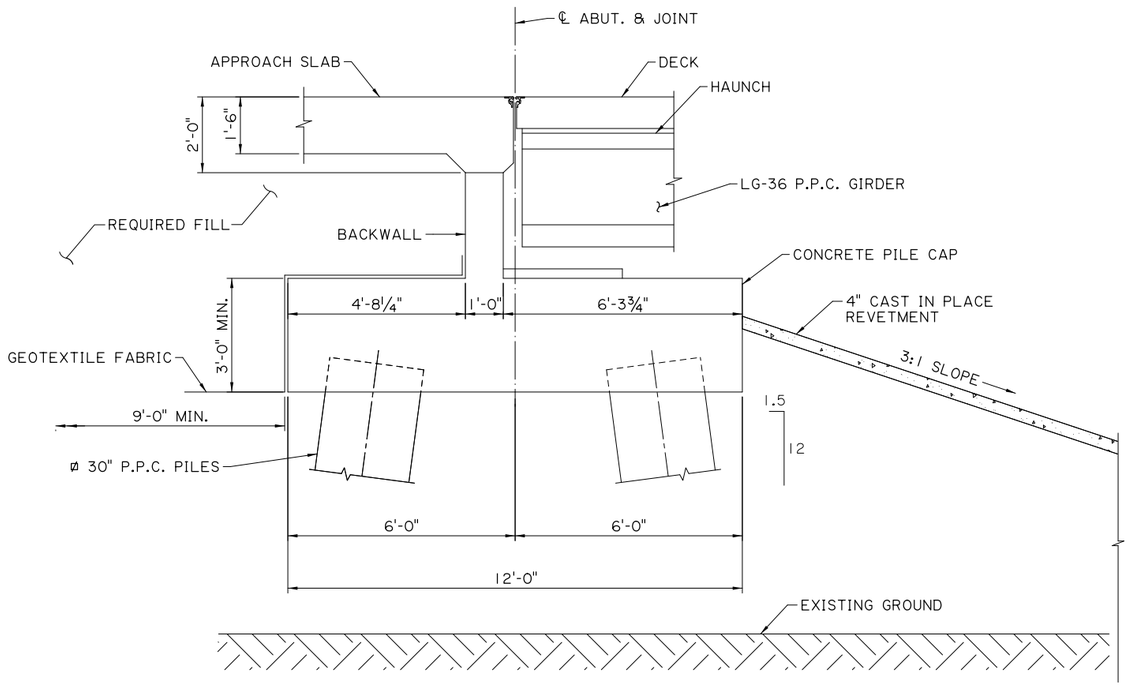

SECTION B-B
SCALE: ½" = 1'-0"

TECHNICAL PROPOSAL PLANS

5/25/2023 2:45:47 PM

Z:\Shared\1370 - I-10 Calcasieu P3\DWGS\BRIDGE\B10 - I10 over Calcasieu River\B10 -01- 04.dgn

SHEET NUMBER	146

PARISH	CONTROL SECTION	STATE PROJECT
CALCASIEU	450-91	H.003931

DESIGN	CHECK	DETAIL	CHECK	REVIEW	SERIES #
JJB	CML	KNP	JJB		2 OF 2

TECHNICAL PROPOSAL PLANS

PRELIMINARY
NOT FOR CONSTRUCTION
ENGINEER:
ROBERT M. GRAY

LICENSE #:
45611

DATE:
5/25/23

NO.	DATE	REVISION OR CHANGE ORDER DESCRIPTION	BY

STATE OF LOUISIANA
LICENSED PROFESSIONAL ENGINEER
CERTIFIED

B-10 WEST APPROACH SPAN

ABUTMENT DETAILS

I-10 CALCASIEU RIVER BRIDGE IMPROVEMENTS

DOTD
LOUISIANA DEPARTMENT OF TRANSPORTATION & DEVELOPMENT

CBP
CALCASIEU BRIDGE PARTNERS

TECHNICAL PROPOSAL PLANS
5/25/2023 2:45:47 PM
Z:\Shared\1370 - I-10 Calcasieu P3\DWGS\BRIDGE\B10 - I10 over Calcasieu River\B10 -01- 04.dgn

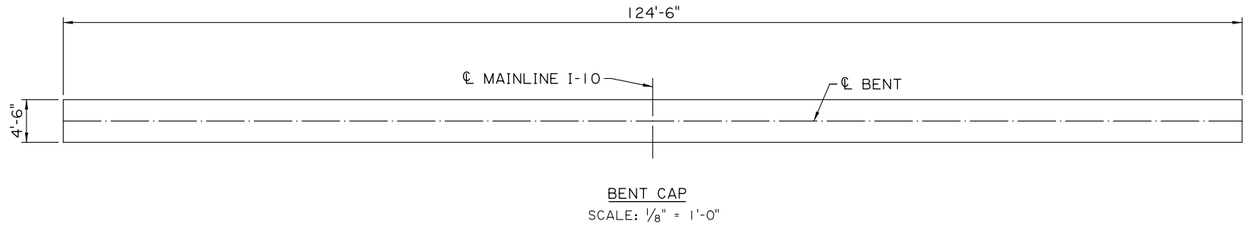

BENT CAP
SCALE: 1/8" = 1'-0"

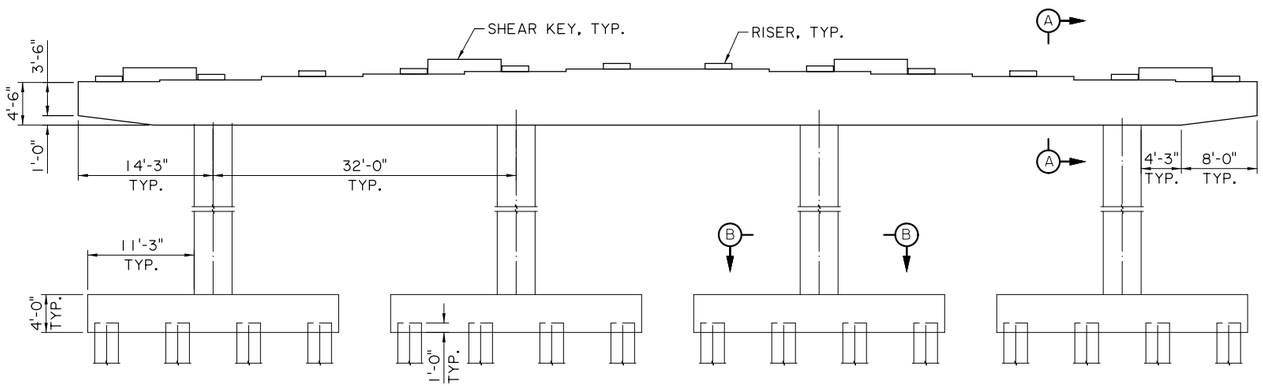

ELEVATION
SCALE: 1/8" = 1'-0"

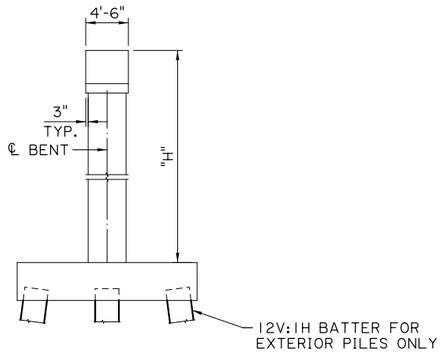

SIDE VIEW
SCALE: 1/8" = 1'-0"

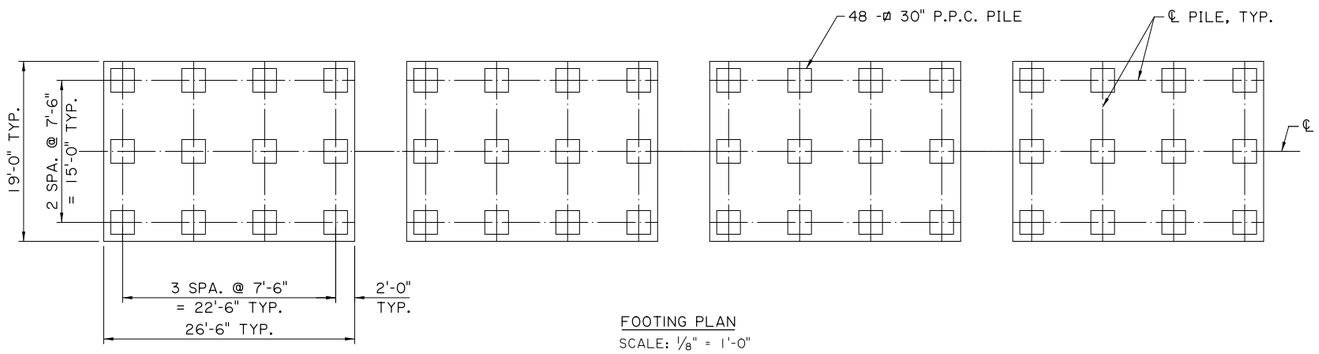

FOOTING PLAN
SCALE: 1/8" = 1'-0"

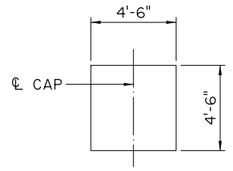

SECTION A-A
SCALE: 1/4" = 1'-0"

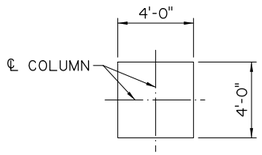

SECTION B-B
SCALE: 1/4" = 1'-0"

DIMENSION TABLE	
BENT NO.	"H"
2W	11'
3W	12'-6"
4W	12'-2"
5W	12'-5"
6W	11'-8"
7W	11'-7"
8W	11'-6"
9W	11'-9"
10W	12'-2"
11W	13'-2"
12W	13'-10"
13W	14'-8"
14W	15'-2"
15W	15'-11"
16W	16'-10"
17W	17'-5"
18W	19'-8"
19W	19'-8"
20W	20'-10"
21W	22'-1"
22W	23'-5"
23W	24'-6"
24W	25'-8"
25W	26'-8"
26W	27'-8"
27W	29'-1"
28W	28'-5"
29W	30'-8"
30W	34'-10"
31W	32'-8"
32W	36'-1"

NOTE:
30" PPC PILES ARE BATTERED ON PIERS IN EDC SPANS.
PILES ARE STRAIGHT FOR PIER 32W IN THE OUTSIDE EDC AREA.

SHEET NUMBER 147

PARISH	CONTROL SECTION	STATE PROJECT
CALCASIEU	450-91	H.003931

DESIGN	CHECK	DETAIL	CHECK	REVIEW	SERIES # 1 OF 4
JJB	CML	KNP	JJB		

TECHNICAL PROPOSAL PLANS
PRELIMINARY
NOT FOR CONSTRUCTION
ENGINEER: ROBERT M. GRAY
LICENSE #: 45611
DATE: 5/25/23

NO.	DATE	REVISION OR CHANGE ORDER DESCRIPTION	BY

B-10 WEST APPROACH SPAN
BENT DETAILS
I-10 CALCASIEU RIVER BRIDGE IMPROVEMENTS

LOUISIANA DEPARTMENT OF TRANSPORTATION & DEVELOPMENT
CALCASIEU BRIDGE PARTNERS

DIMENSION TABLE				
BENT NO.	'W"	"H"	"OH"	"S"
33W	148'-6"	35'-3"	14'-3"	40'-0"
34W	148'-6"	38'-0"	14'-3"	40'-0"
35W	130'-0"	40'-10"	12'-0"	35'-4"
36W	123'-0"	41'-2"	12'-0"	33'-0"

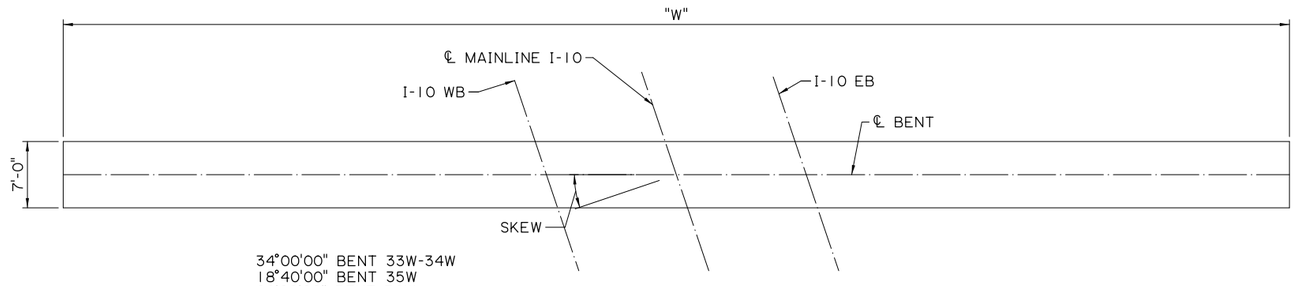

BENT CAP
SCALE: 1/8" = 1'-0"

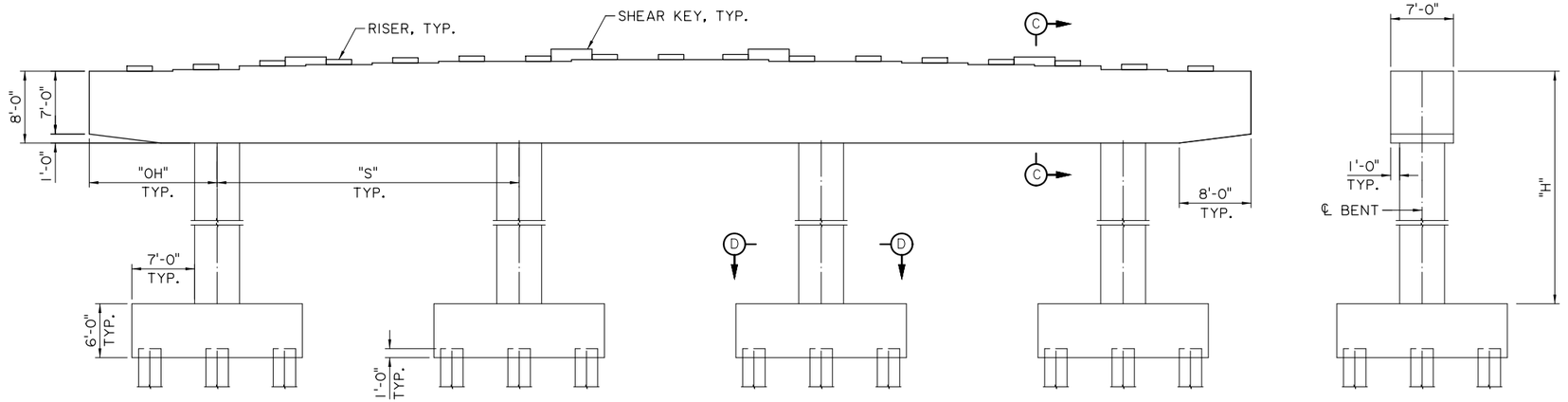

ELEVATION
SCALE: 1/8" = 1'-0"

SIDE VIEW
SCALE: 1/8" = 1'-0"

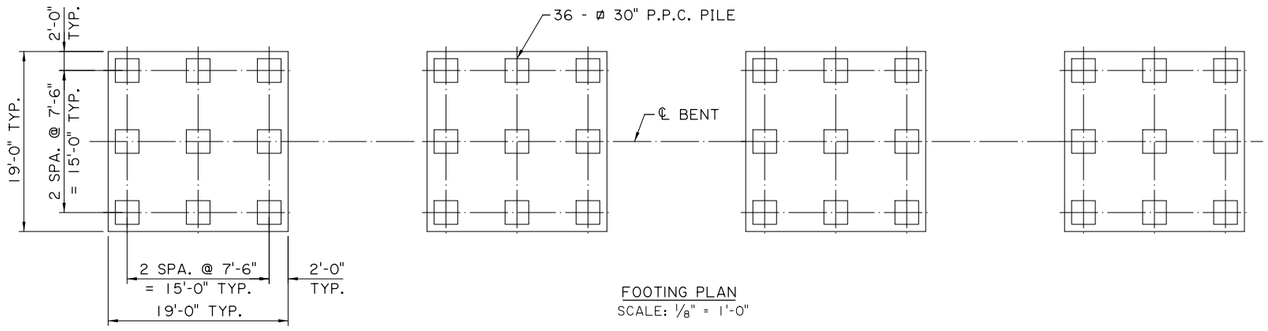

FOOTING PLAN
SCALE: 1/8" = 1'-0"

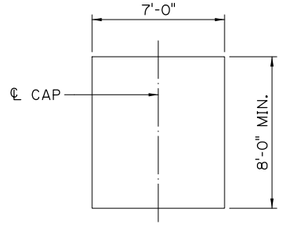

SECTION C-C
SCALE: 1/4" = 1'-0"

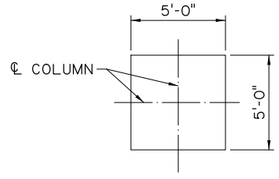

SECTION D-D
SCALE: 1/4" = 1'-0"

TECHNICAL PROPOSAL PLANS

5/25/2023 2:45:47 PM

Z:\Shared\1370 - I-10 Calcasieu P3\DWGS\BRIDGE\B10 - I10 over Calcasieu River\B10 -01- 04.dgn

SHEET NUMBER 148

PARISH	CONTROL SECTION	STATE PROJECT
CALCASIEU	450-91	H.003931

DESIGN	CHECK	DETAIL	CHECK	REVIEW	SERIES #
JJB	CML	KNP	JJB		2 OF 4

TECHNICAL PROPOSAL PLANS
PRELIMINARY
NOT FOR CONSTRUCTION
ENGINEER:
ROBERT M. GRAY
LICENSE #: 45611
DATE: 5/25/23

NO.	DATE	REVISION OR CHANGE ORDER DESCRIPTION	BY

B-10 WEST APPROACH SPAN
BENT DETAILS

I-10 CALCASIEU RIVER BRIDGE IMPROVEMENTS

DOTD LOUISIANA DEPARTMENT OF TRANSPORTATION & DEVELOPMENT

CBP CALCASIEU BRIDGE PARTNERS

DIMENSION TABLE				
BENT NO.	"W"	"H"	"OH"	"S"
37W	165'-0"	46'-5"	12'-0"	35'-3"
38W	151'-0"	49'-5"	12'-0"	31'-9"
39W	146'-6"	52'-4"	12'-0"	30'-7 1/2"
40W	146'-6"	56'-6"	12'-0"	30'-7 1/2"
41W	146'-6"	61'-5"	12'-0"	30'-7 1/2"
42W	144'-0"	62'-9"	12'-0"	30'-0"
43W	161'-0"	66'-1"	12'-0"	34'-3"

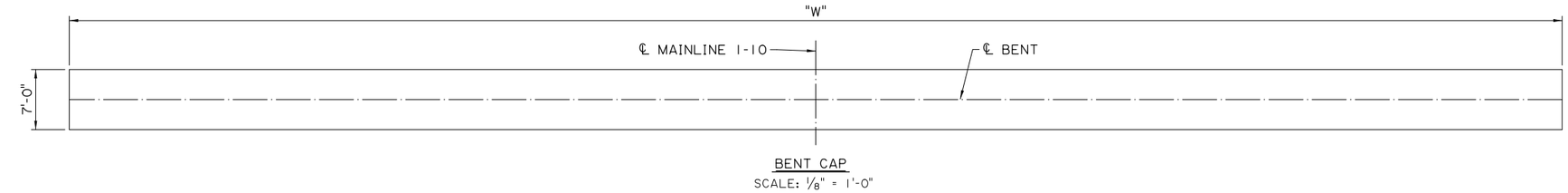

BENT CAP
SCALE: 1/8" = 1'-0"

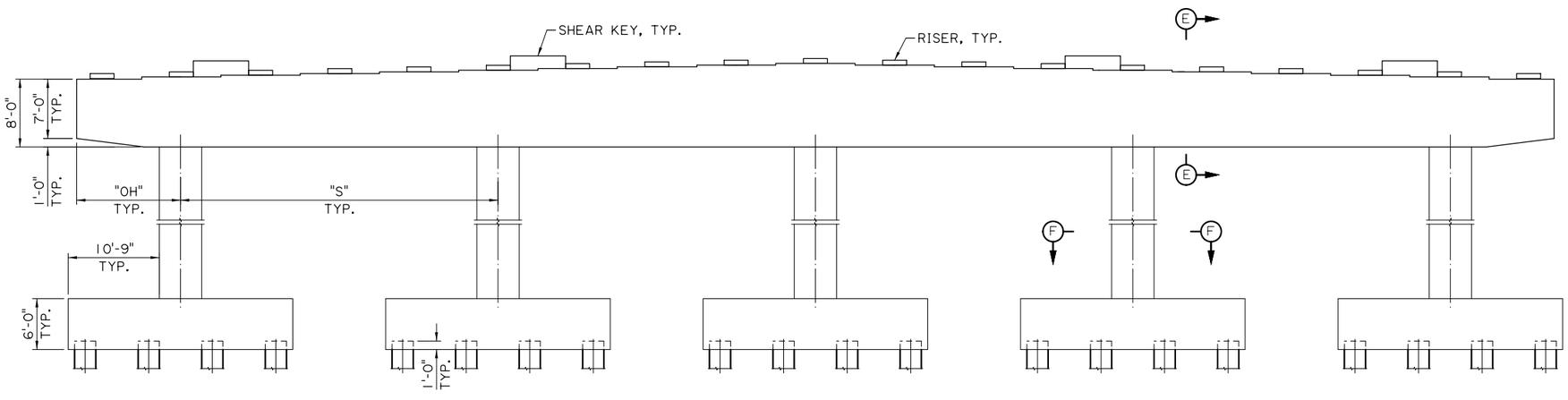

ELEVATION
SCALE: 1/8" = 1'-0"

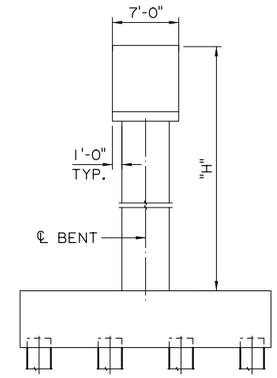

SIDE VIEW
SCALE: 1/8" = 1'-0"

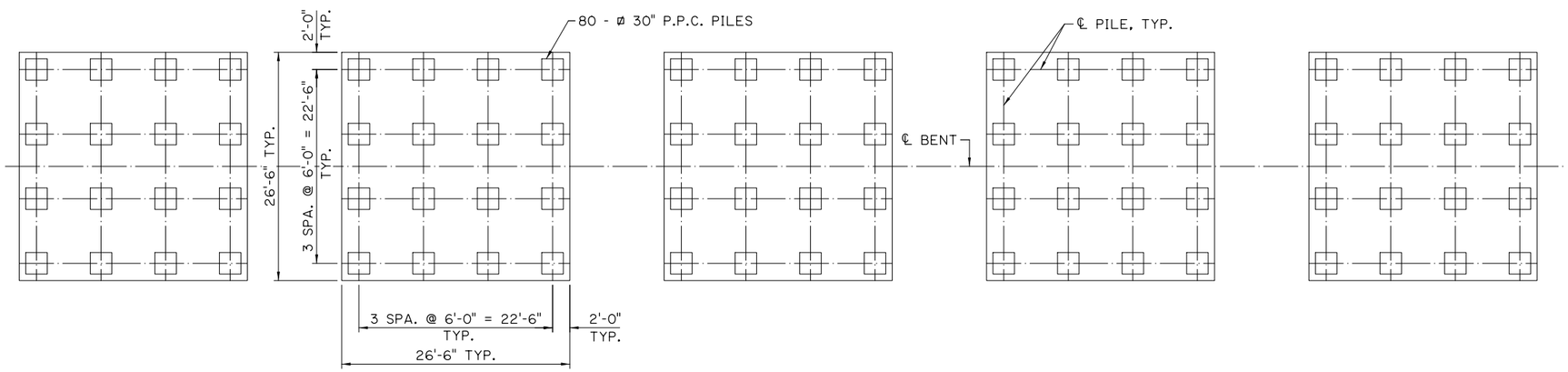

FOOTING PLAN
SCALE: 1/8" = 1'-0"

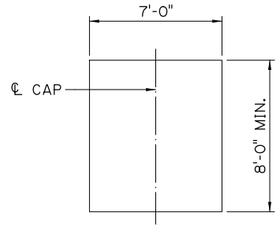

SECTION E-E
SCALE: 1/4" = 1'-0"

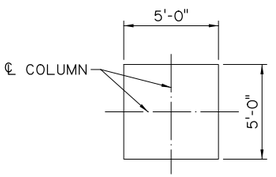

SECTION F-F
SCALE: 1/4" = 1'-0"

TECHNICAL PROPOSAL PLANS

Z:\Shared\1370 - I-10 Calcasieu P3\DWGS\BRIDGE\B10 - I10 over Calcasieu River\B10 -01- 04.dgn 5/25/2023 2:45:48 PM

SHEET NUMBER 149

PARISH	CONTROL SECTION	STATE PROJECT
CALCASIEU	450-91	H.003931

DESIGN	CHECK	DETAIL	CHECK	REVIEW	SERIES
JJB	CML	KNP	JJB		3 OF 4

TECHNICAL PROPOSAL PLANS
PRELIMINARY
NOT FOR CONSTRUCTION
ENGINEER:
ROBERT M. GRAY
LICENSE #: 45611
DATE: 5/25/23

NO.	DATE	REVISION OR CHANGE ORDER DESCRIPTION	BY

B-10 WEST APPROACH SPAN
BENT DETAILS

I-10 CALCASIEU RIVER BRIDGE IMPROVEMENTS

DOTD LOUISIANA DEPARTMENT OF TRANSPORTATION & DEVELOPMENT

CBP CALCASIEU BRIDGE PARTNERS

TECHNICAL PROPOSAL PLANS
5/25/2023 2:45:48 PM
Z:\Shared\1370 - I-10 Calcasieu P3\DWGS\BRIDGE\B10 - I10 over Calcasieu River\B10 -01- 04.dgn

DIMENSION TABLE				
BENT NO.	"W"	"H"	"OH"	"S"
44W	147'-0"	67'-10"	13'-6"	40'-0"

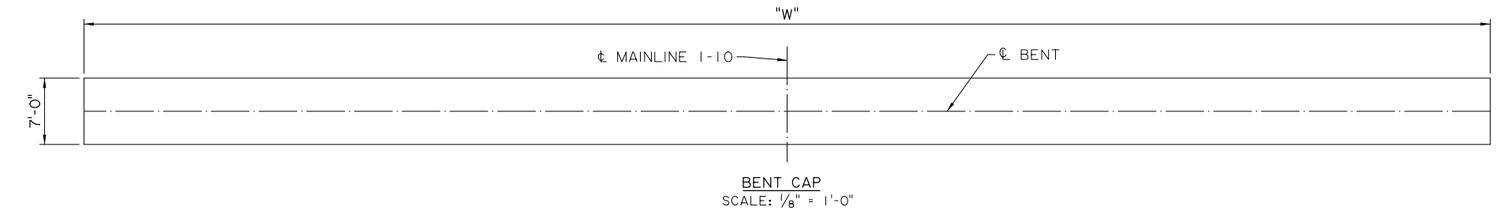

BENT CAP
SCALE: 1/8" = 1'-0"

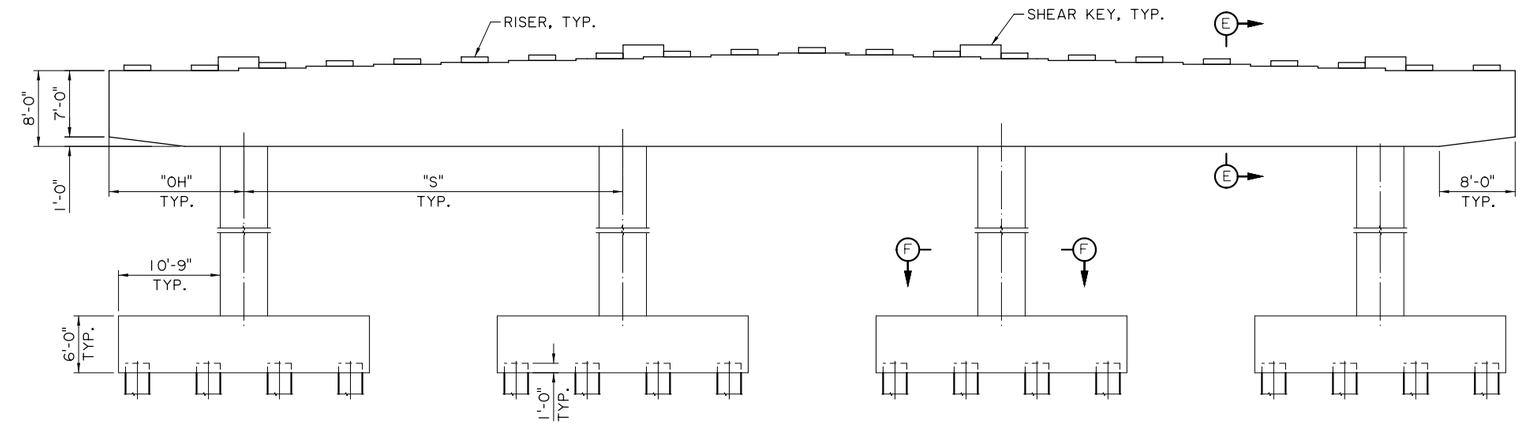

ELEVATION
SCALE: 1/8" = 1'-0"

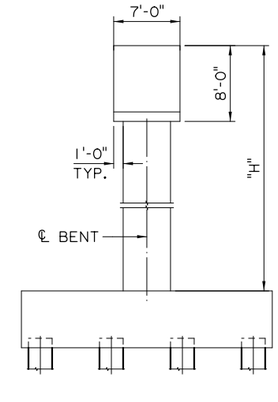

SIDE VIEW
SCALE: 1/8" = 1'-0"

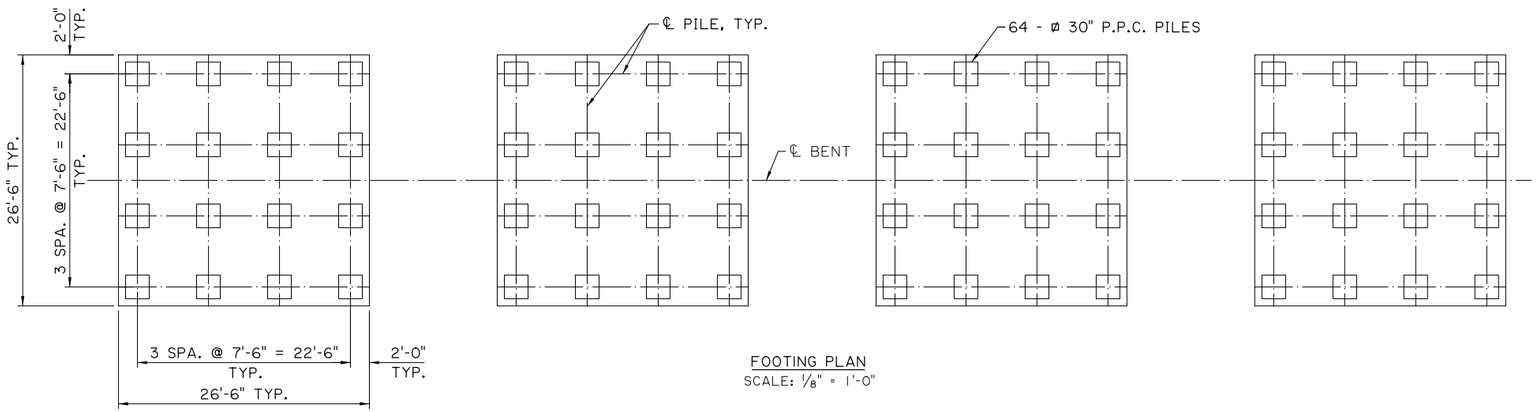

FOOTING PLAN
SCALE: 1/8" = 1'-0"

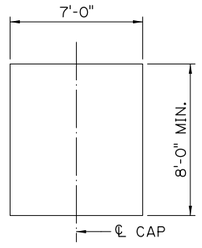

SECTION E-E
SCALE: 1/4" = 1'-0"

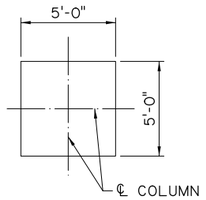

SECTION F-F
SCALE: 1/4" = 1'-0"

SHEET NUMBER 150

PARISH	CONTROL SECTION	STATE PROJECT
CALCASIEU	450-91	H.003931

DESIGN	CHECK	DETAIL	CHECK	REVIEW	SERIES # 4 OF 4
JJB	CML	KNP	JJB		

TECHNICAL PROPOSAL PLANS
PRELIMINARY
NOT FOR CONSTRUCTION
ENGINEER: ROBERT M. GRAY
LICENSE #: 45611
DATE: 5/25/23

NO.	DATE	REVISION OR CHANGE ORDER DESCRIPTION	BY

B-10 WEST APPROACH SPAN
BENT DETAILS

I-10 CALCASIEU RIVER BRIDGE IMPROVEMENTS

DOTD LOUISIANA DEPARTMENT OF TRANSPORTATION & DEVELOPMENT

CBP CALCASIEU BRIDGE PARTNERS

TECHNICAL PROPOSAL PLANS

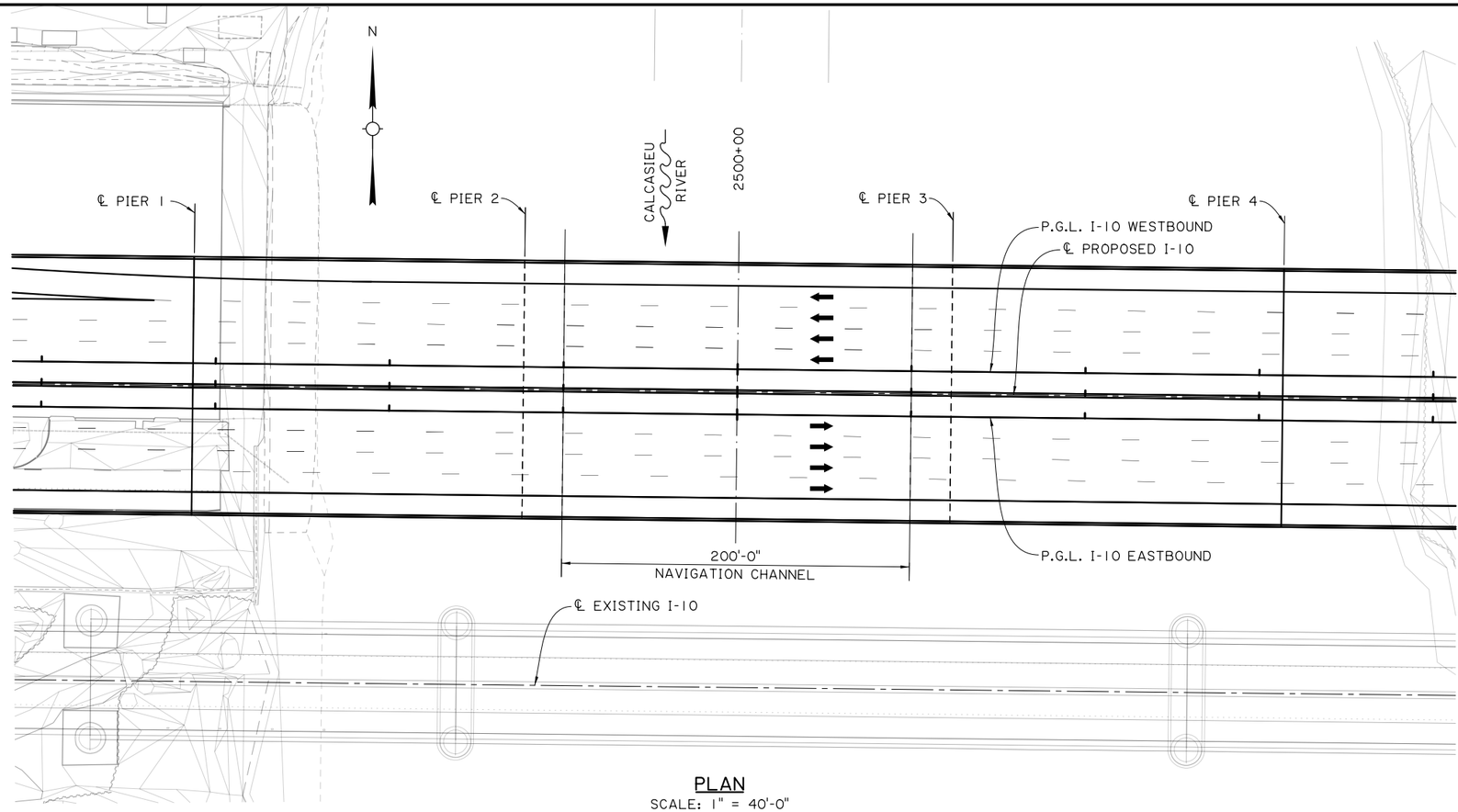

PLAN
SCALE: 1" = 40'-0"

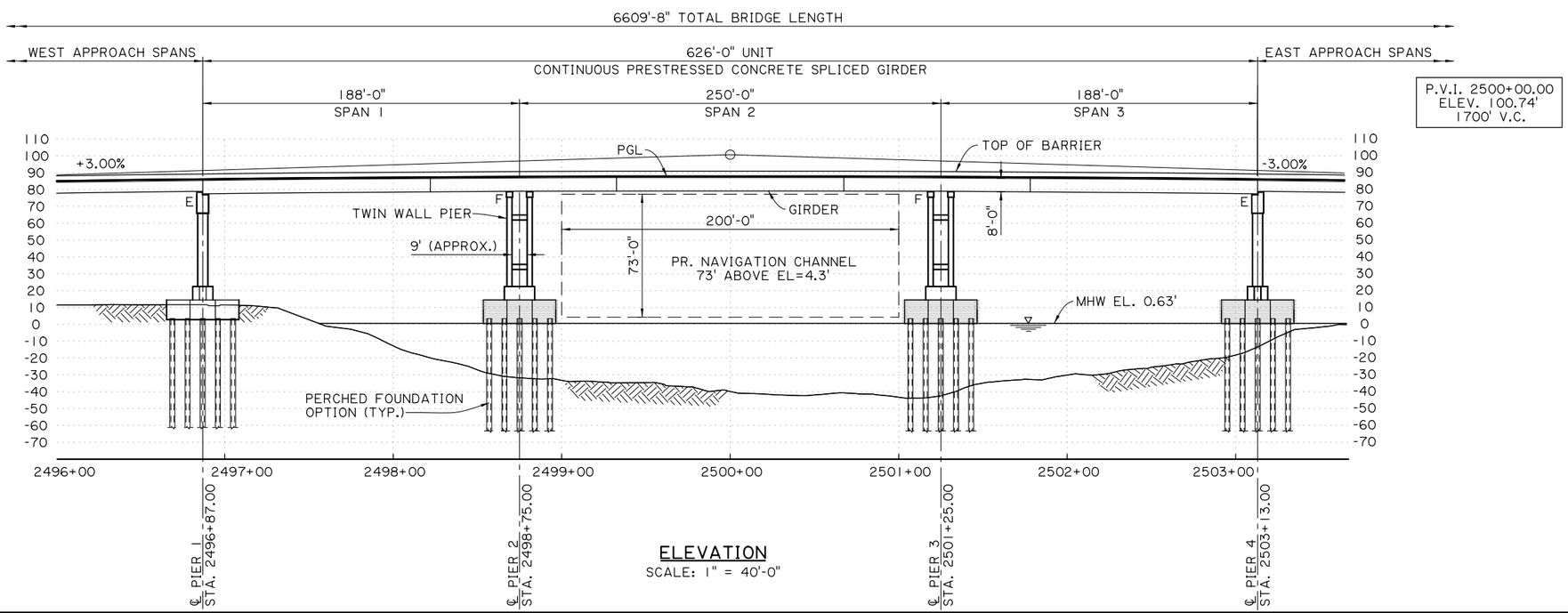

ELEVATION
SCALE: 1" = 40'-0"

SHEET NUMBER	151

PARISH	CONTROL SECTION	STATE PROJECT
CALCASIEU	450-91	H.003931

DESIGN	CHECK	DETAIL	CHECK	REVIEW	SERIES = 1 OF 1
ARA		PMR	ARA	HKO	

CONCEPTUAL
PRELIMINARY
NOT FOR CONSTRUCTION
ENGINEER:
THOMAS P. MURPHY
LICENSE #:
45353
DATE:
3/9/2023

NO.	DATE	REVISION OR CHANGE ORDER DESCRIPTION	BY

B-10 MAIN SPAN
GENERAL PLAN AND ELEVATION

I-10 CALCASIEU RIVER BRIDGE IMPROVEMENTS

LOUISIANA DEPARTMENT OF TRANSPORTATION & DEVELOPMENT

CALCASIEU BRIDGE PARTNERS

P:\(CJL) 4580 I-10 Calcasieu Bridge Replacement\10 CADD\Struct_Main\Technical Proposal Plans MAIN\03 - B-10 Main Span - General Plan and Elevation.dgn 5/11/2023 11:11:26 AM

P:\(CJL) 4580 I-10 Calcasieu Bridge Replacement\10 CADD\Struct_Main\Technical Proposal Plans MAIN\04 - B-10 Main Span - Perched Pier Footing - Plan and Pile Layout.dgn 5/11/2023 11:11:29 AM

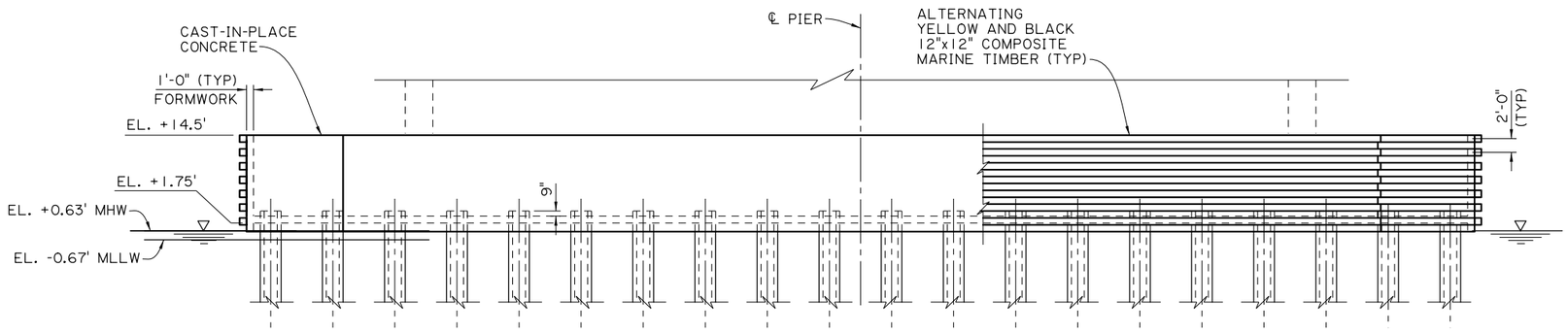

ELEVATION
SCALE: 3/32"=1'-0"

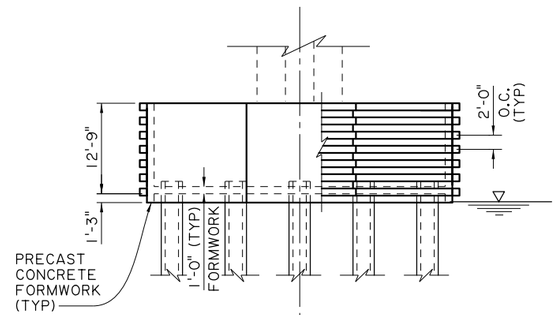

SIDE VIEW
SCALE: 3/32"=1'-0"

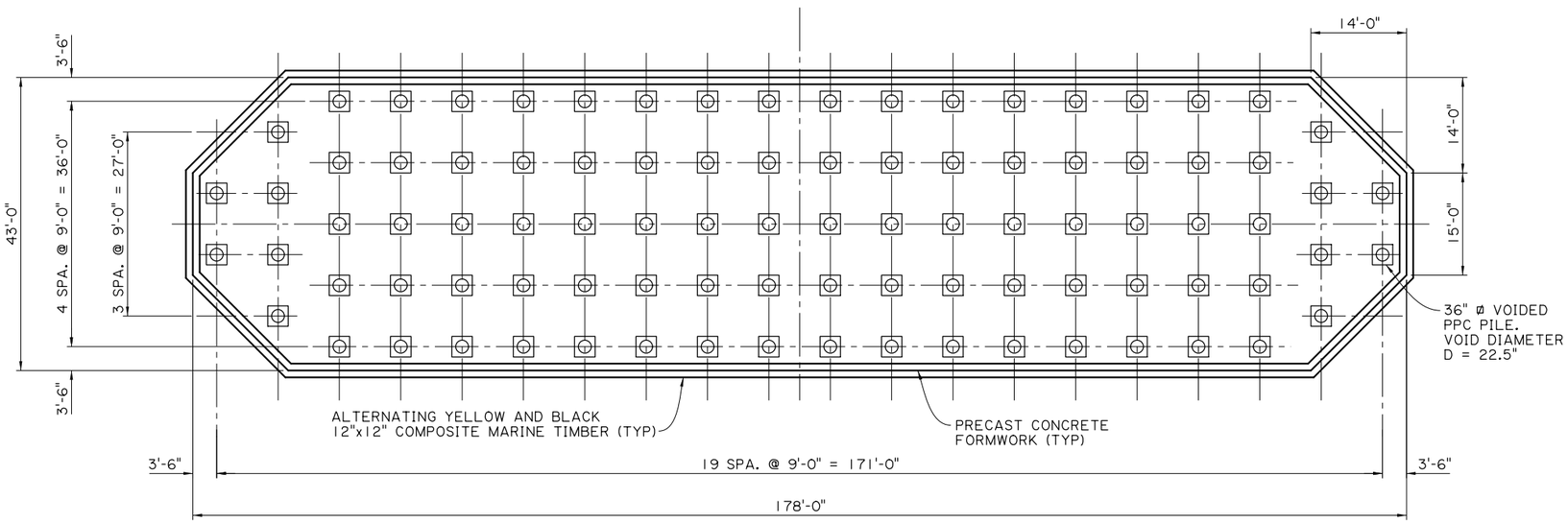

FOOTING PLAN AND PILE LAYOUT
SCALE: 3/32"=1'-0"

FOR WATER LEVELS SEE BASIS
OF DESIGN MEMO:
MEAN HIGH WATER (MHW) +0.63'
MEAN LOW WATER (MLW) -0.42'

SHEET NUMBER	152

PARISH	CONTROL SECTION	STATE PROJECT
CALCASIEU	450-91	H.003931

DESIGN	CHECK	DETAIL	CHECK	REVIEW	SERIES
MJH	MAM	PMR	MJH	HKO	1 OF 1

CONCEPTUAL
PRELIMINARY
NOT FOR CONSTRUCTION
ENGINEER:
MOTT J. HOLT
LICENSE #: 45908
DATE: 3/9/2023

NO.	DATE	REVISION OR CHANGE ORDER DESCRIPTION	BY

B-10 MAIN SPAN
PIER FOOTING PLAN AND PILE LAYOUT
PERCHED FOOTING

I-10 CALCASIEU RIVER BRIDGE IMPROVEMENTS

DOTD LOUISIANA DEPARTMENT OF TRANSPORTATION & DEVELOPMENT

CBP CALCASIEU BRIDGE PARTNERS

P:\(CJL) 4580 I-10 Calcasieu Bridge Replacement\10 CADD\Struct_Main\Technical Proposal Plans MAIN\05 - B-10 Main Span - Perched Pier Footing - Precast Concrete Formwork Shell.dgn 5/11/2023 11:11:31 AM

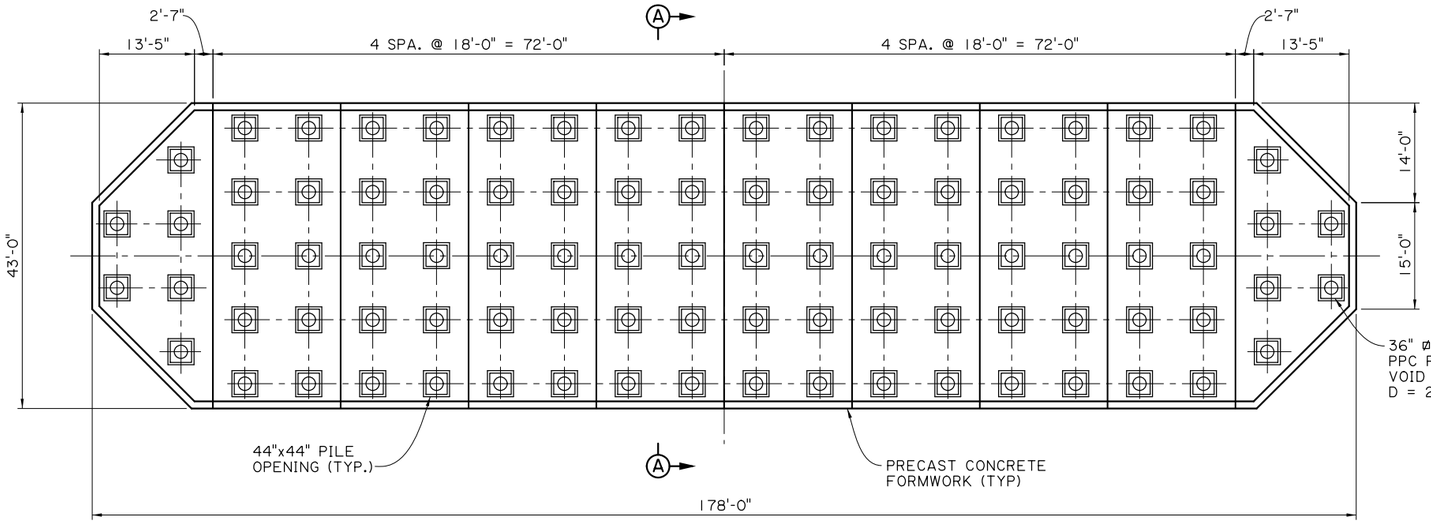

PRECAST CONCRETE FORMWORK SHELL TOP VIEW

SCALE: 3/32"=1'-0"

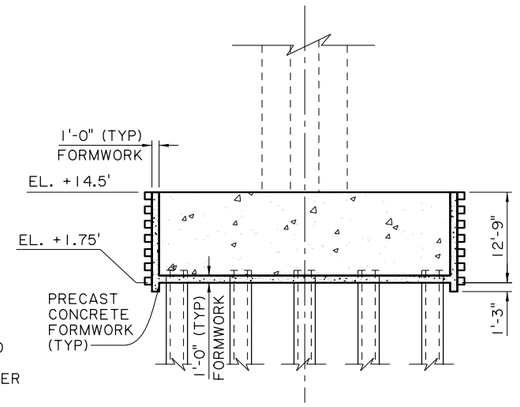

SETION A-A

SCALE: 3/32"=1'-0"

SUGGESTED SEQUENCE OF INSTALLATION FOR PRECAST CONCRETE FORMWORK SHELL:

THE FOLLOWING PROCEDURE HAS BEEN ASSUMED:

STEP 1: CUTOFF PREVIOUSLY DRIVEN PILES TO CUTOFF ELEVATION REQUIRED BY DESIGN DRAWINGS.

STEP 2: PERFORM A SITE SURVEY OF DRIVEN PILES TO CONFIRM PILE SPACING, PROVIDE INFORMATION TO THE ENGINEER OF RECORD, AND ADJUST PRECAST CONCRETE FORMWORK SHELL DESIGN AS REQUIRED SUCH THAT ALL ASSEMBLIES ARE CENTERED ON PILES.

STEP 3: CAST PRECAST CONCRETE FORMWORK SHELL AND ALLOW TO CURE TO DESIGN STRENGTH.

STEP 4: INSTALL A TEMPORARY SHORING/SUPPORT SYSTEM ON THE DRIVEN PILES FOR TEMPORARY SUPPORT OF THE PRECAST FORMWORK SHELL. THIS STEP MAY OCCUR AT THE SAME TIME AS STEP 3.

STEP 5: LIFT AND LOWER PRECAST CONCRETE FORMWORK SHELL ON TOP OF THE PILES.

STEP 6: VERIFY FORMWORK SHELL ELEVATION AND SUPPORT IS SATISFACTORY, RELEASE CRANE.

STEP 7: PLACE GROUT IN ANNULAR SPACES BETWEEN PILES AND FORMWORK SHELL TO CREATE CONCRETE TIGHT CONNECTION. PLACE IN-SITU CONCRETE/GROUT AT JOINT LOCATIONS BETWEEN SEGMENTS AS SPECIFIED ON THE DESIGN DRAWINGS.

STEP 8: AFTER GROUT HAS ADEQUATELY CURED, BASED ON MANUFACTURER'S RECOMMENDATIONS, REMOVE ANY FOREIGN MATERIALS, RAINWATER AND/OR DEBRIS PRESENT INSIDE THE FOOTING FORMWORK.

STEP 9: CONSTRUCT PERMANENT PIER FOOTING CAPS IN ACCORDANCE WITH THE DESIGN DRAWINGS AND SPECIFICATIONS. THE PIER FOOTING SHALL BE CONSTRUCTED BY MEANS OF A 2 STAGE POUR (SEE NOTES).

FOR WATER LEVELS SEE BASIS OF DESIGN MEMO:
MEAN HIGH WATER (MHW) +0.63'
MEAN LOW WATER (MLW) -0.42'

NOTE:
1. PRELIMINARY DESIGN OF THE PRECAST CONCRETE FORMWORK IS BASED ON A 2 STAGE POUR:
   -1ST POUR, H=4ft.
   -2ND POUR, H=7.75ft.
2. THE COVER OF THE REINFORCING STEEL IN THE PRECAST CONCRETE FORMWORK SHALL BE 2".

SHEET NUMBER 153

PARISH	CONTROL SECTION	STATE PROJECT
CALCASIEU	450-91	H.003931

DESIGN	CHECK	DETAIL	CHECK	REVIEW	SERIES
MJH	MAM	PMR	MJH	HKO	1 OF 1

CONCEPTUAL
PRELIMINARY
NOT FOR CONSTRUCTION
ENGINEER: MOTT J. HOLT
LICENSE #: 45908
DATE: 3/9/2023

NO.	DATE	REVISION OR CHANGE ORDER DESCRIPTION	BY

B-10 MAIN SPAN
PIER FOOTING PRECAST CONC FORMWORK SHELL
PERCHED FOOTING

I-10 CALCASIEU RIVER BRIDGE IMPROVEMENTS

DOTD LOUISIANA DEPARTMENT OF TRANSPORTATION & DEVELOPMENT

CBP CALCASIEU BRIDGE PARTNERS

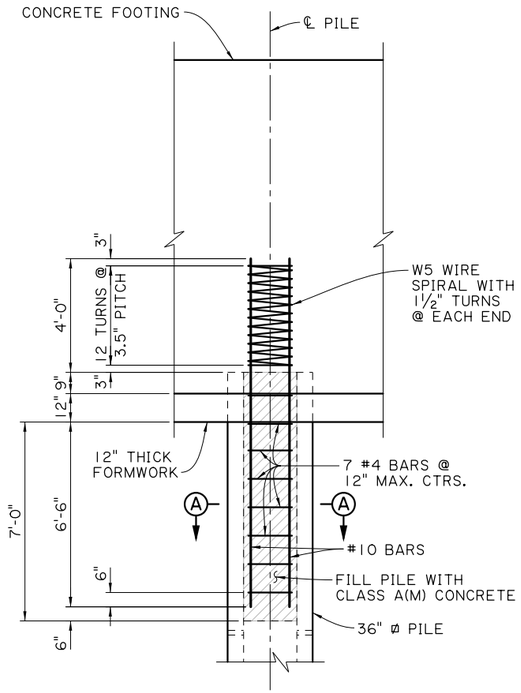

PILE TO FOOTING CONNECTION
SCALE: ⅜"=1'-0"

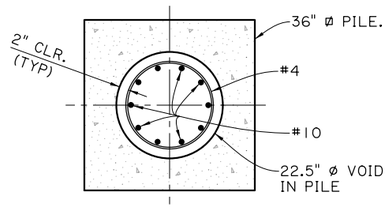

SECTION A-A
SCALE: ½"=1'-0"

FOR WATER LEVELS SEE BASIS OF DESIGN MEMO:
MEAN HIGH WATER (MHW) +0.63'
MEAN LOW WATER (MLW) -0.42'

SHEET NUMBER 154

PARISH	CONTROL SECTION	STATE PROJECT
CALCASIEU	450-91	H.003931

DESIGN	MJH	DETAIL	PMR	REVIEW	HKO
CHECK	MAM	CHECK	MJH	SERIES	1 OF 1

CONCEPTUAL
PRELIMINARY
NOT FOR CONSTRUCTION
ENGINEER:
MOTT J. HOLT
LICENSE #:
45908
DATE:
3/9/2023

NO.	DATE	REVISION OR CHANGE ORDER DESCRIPTION	BY

B-10 MAIN SPAN
PILE CONNECTION DETAILS

I-10 CALCASIEU RIVER BRIDGE IMPROVEMENTS

DOTD LOUISIANA DEPARTMENT OF TRANSPORTATION & DEVELOPMENT
CBP CALCASIEU BRIDGE PARTNERS

P:\(CJL) 4580 I-10 Calcasieu Bridge Replacement\10 CADD\Struct_Main\Technical Proposal Plans MAIN\07 - B-10 Main Span - End Span Piers.dgn 5/11/2023 11:11:35 AM

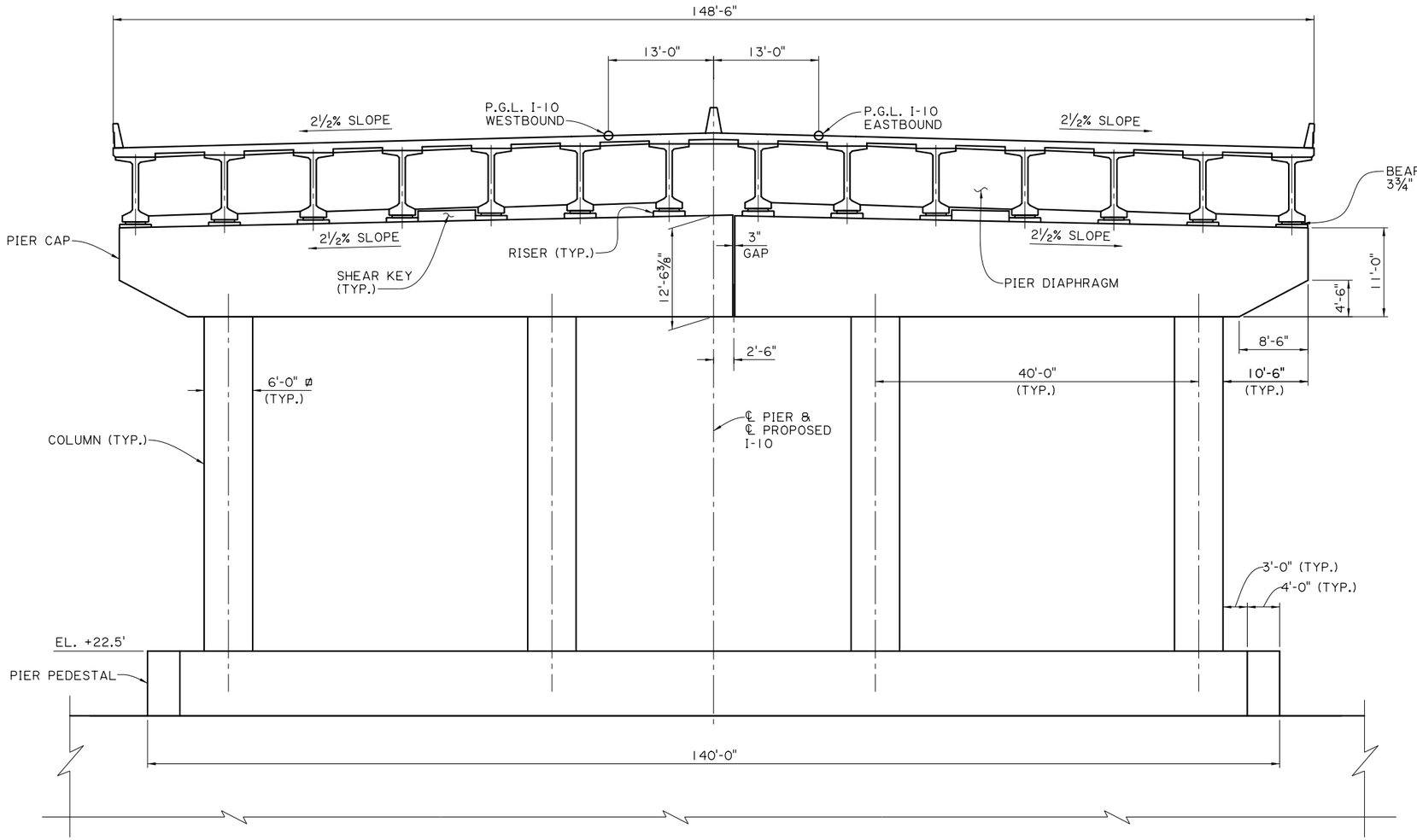

ELEVATION END PIER
SCALE: ⅛" = 1'-0"

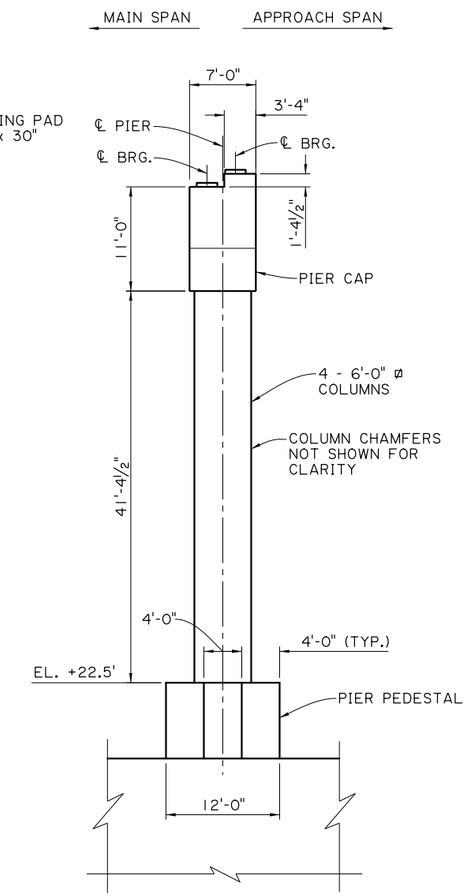

SIDE VIEW
SCALE: ⅛" = 1'-0"

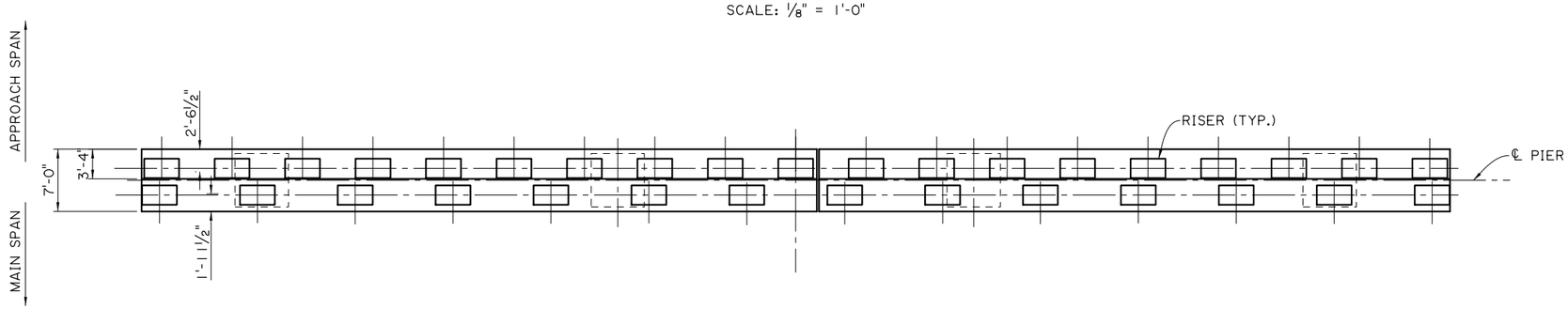

PLAN END PIER
SCALE: ⅛" = 1'-0"

NOTES:
1. WIDTH OF DECK MAY REQUIRE USE OF A LONGITUDINAL CONSTRUCTION JOINT AND/OR EXPANSION JOINT IN THE CAST-IN-PLACE CONCRETE TO CONTROL SHRINKAGE CRACKING.

SHEET NUMBER 155

PARISH	CONTROL SECTION	STATE PROJECT
CALCASIEU	450-91	H.003931

DESIGN	ARA
CHECK	MAM
DETAIL	PMR
CHECK	ARA
REVIEW	HKO
SERIES	1 OF 1

CONCEPTUAL
PRELIMINARY
NOT FOR CONSTRUCTION
ENGINEER: MOTT J. HOLT
LICENSE #: 45908
DATE: 3/9/2023

NO.	DATE	REVISION OR CHANGE ORDER DESCRIPTION	BY

B-10 MAIN SPAN
END SPAN PIERS

I-10 CALCASIEU RIVER BRIDGE IMPROVEMENTS

DOTD LOUISIANA DEPARTMENT OF TRANSPORTATION & DEVELOPMENT
CBP CALCASIEU BRIDGE PARTNERS

TECHNICAL PROPOSAL PLANS
P:\(CJL) 4580 I-10 Calcasieu Bridge Replacement\10 CADD\Struct_Main\Technical Proposal Plans MAIN\08 - B-10 Main Span - Interior Twin Wall Piers.dgn 5/11/2023 11:11:39 AM

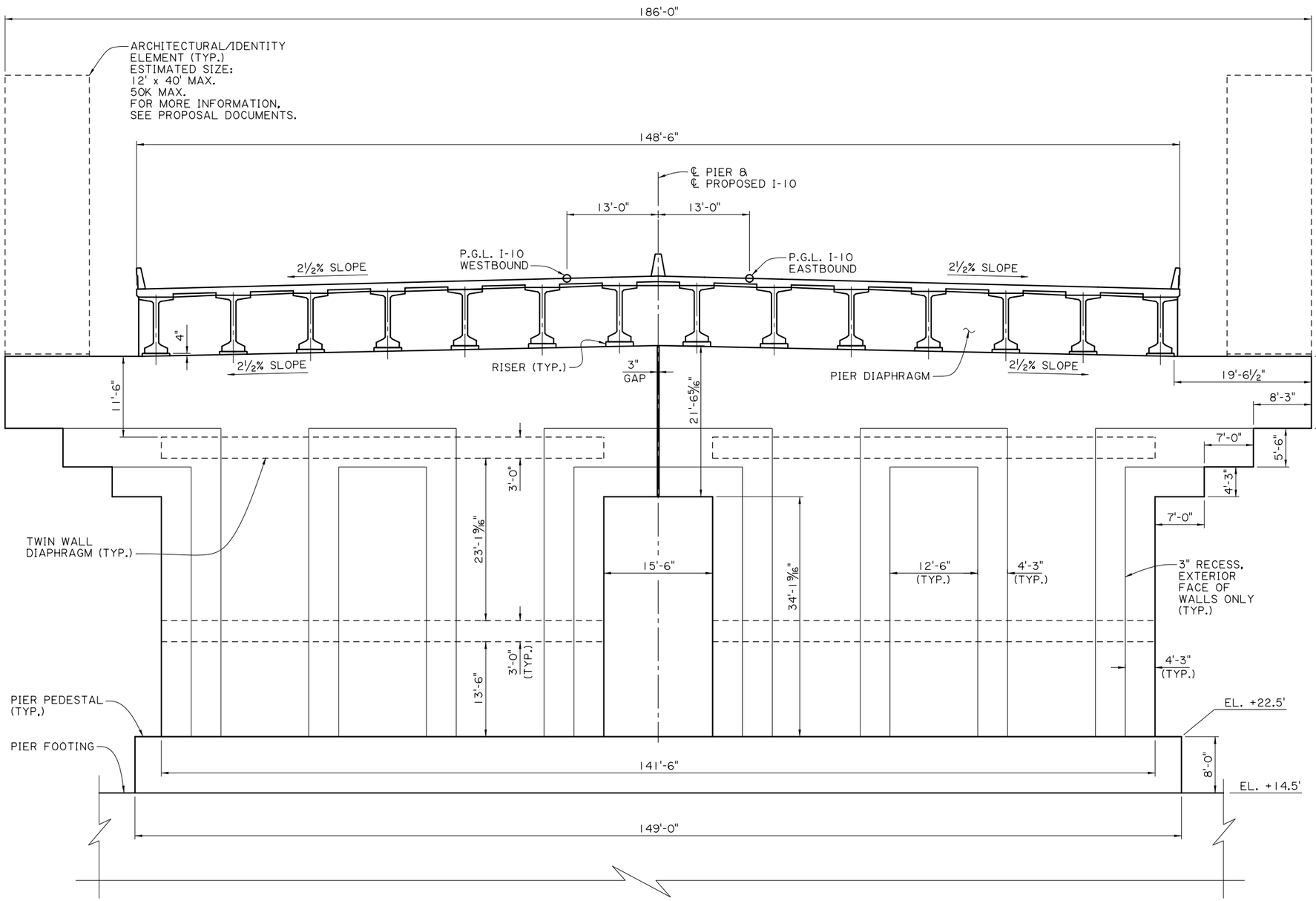

ELEVATION - INTERIOR TWIN WALL PIER
SCALE: ⅛" = 1'-0"

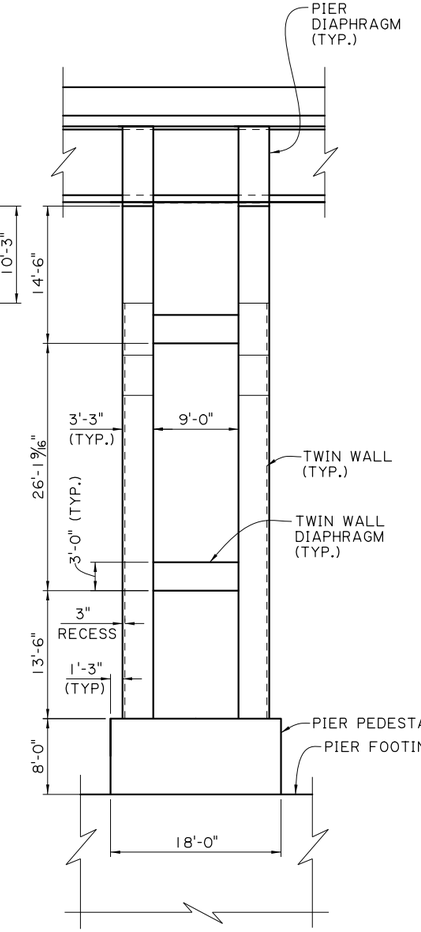

SIDE VIEW
SCALE: ⅛" = 1'-0"
(ARCHITECTURAL/IDENTITY ELEMENT NOT SHOWN)

NOTES:
1. WIDTH OF DECK MAY REQUIRE USE OF A LONGITUDINAL CONSTRUCTION JOINT AND/OR EXPANSION JOINT IN THE CAST-IN-PLACE CONCRETE TO CONTROL SHRINKAGE CRACKING.

SHEET NUMBER 156

PARISH	CONTROL SECTION	STATE PROJECT
CALCASIEU	450-91	H.003931

DESIGN	MDA
CHECK	ARA
DETAIL	PMR
CHECK	ARA
REVIEW	HKO
SERIES =	1 OF 1

CONCEPTUAL
PRELIMINARY
NOT FOR CONSTRUCTION
ENGINEER:
THOMAS P. MURPHY
LICENSE #:
45353
DATE:
3/9/2023

NO.	DATE	REVISION OR CHANGE ORDER DESCRIPTION	BY

B-10 MAIN SPAN
INTERIOR TWIN WALL PIERS

I-10 CALCASIEU RIVER BRIDGE IMPROVEMENTS

LOUISIANA DEPARTMENT OF TRANSPORTATION & DEVELOPMENT

CALCASIEU BRIDGE PARTNERS

TECHNICAL PROPOSAL PLANS
P:\(CJL) 4580 I-10 Calcasieu Bridge Replacement\10 CADD\Struct_Main\Technical Proposal Plans MAIN\09 - B-10 Main Span - Framing Plan.dgn
5/11/2023 11:11:42 AM

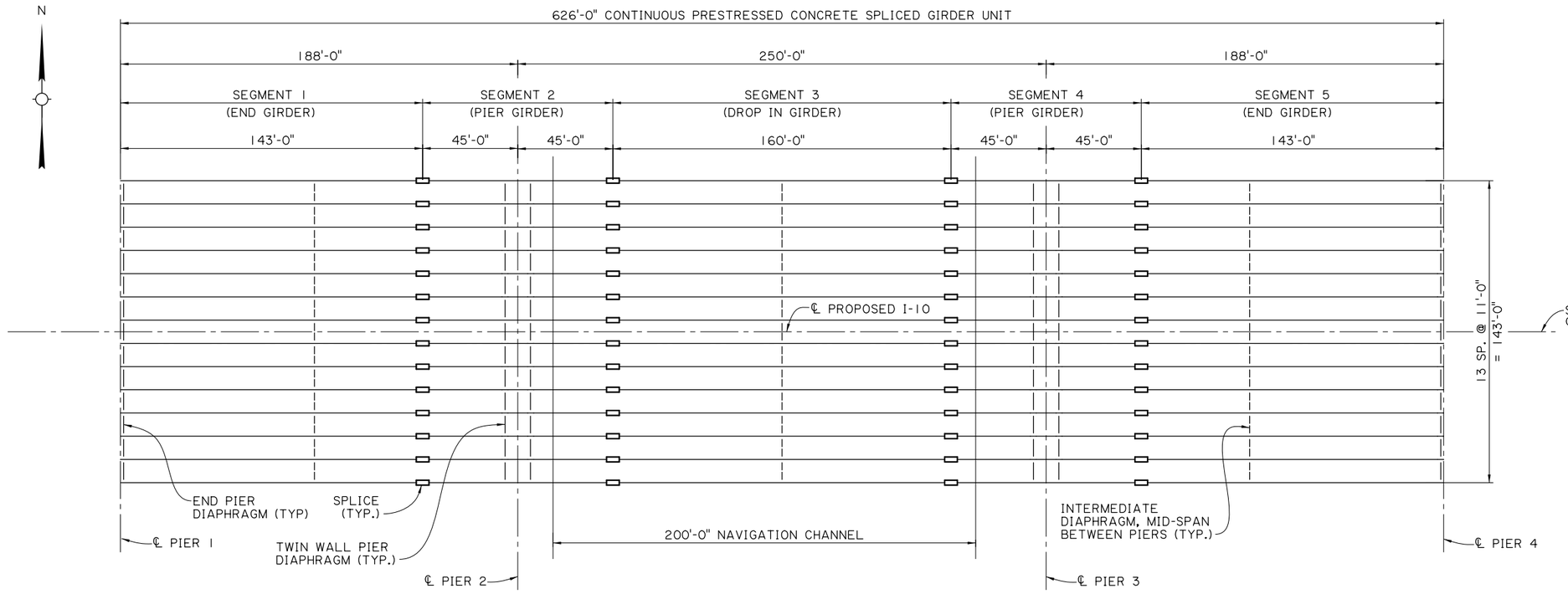

FRAMING PLAN
SCALE: 1" = 30'-0"

SHEET NUMBER 157

PARISH	CONTROL SECTION	STATE PROJECT
CALCASIEU	450-91	H.003931

DESIGN	DETAIL	REVIEW	SERIES = 1 OF 1
CHECK ARA	CHECK ARA	HKO	
	PMR		

CONCEPTUAL
PRELIMINARY
NOT FOR CONSTRUCTION
ENGINEER:
THOMAS P. MURPHY
LICENSE #:
45353
DATE:
3/9/2023

NO.	DATE	REVISION OR CHANGE ORDER DESCRIPTION	BY

B-10 MAIN SPAN
FRAMING PLAN

I-10 CALCASIEU RIVER BRIDGE IMPROVEMENTS

DOTD LOUISIANA DEPARTMENT OF TRANSPORTATION & DEVELOPMENT
CBP CALCASIEU BRIDGE PARTNERS

TECHNICAL PROPOSAL PLANS
P:\(CJU) 4580 I-10 Calcasieu Bridge Replacement\10 CADD\Struct_Main\Technical Proposal Plans MAIN\10 - B-10 Main Span - Typical Section.dgn
5/11/2023 11:11:45 AM

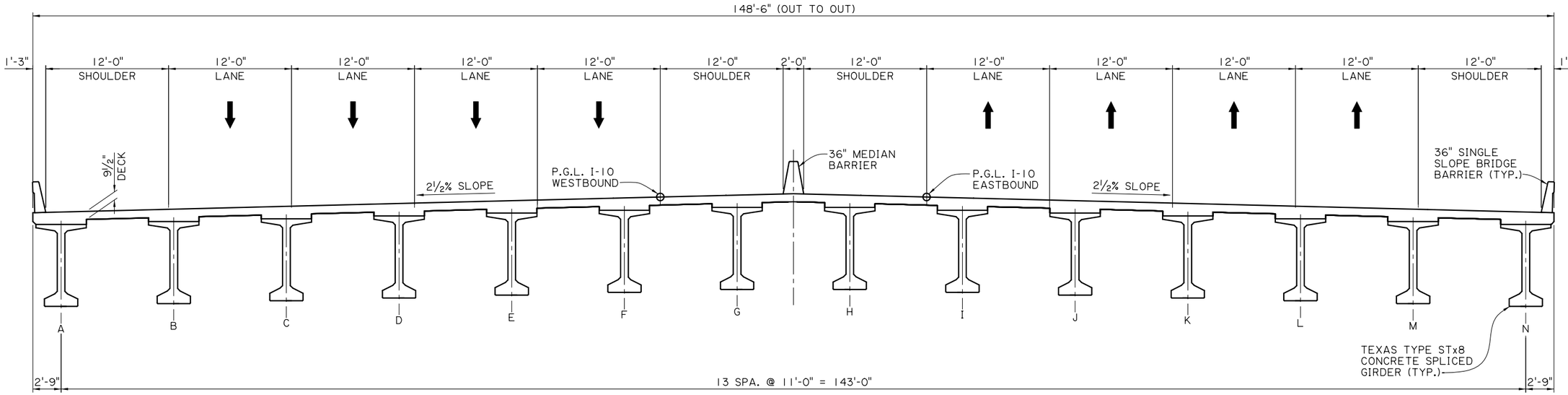

TYPICAL SECTION
SCALE: 3/16" = 1'-0"

NOTES:
1. WIDTH OF DECK MAY REQUIRE LONGITUDINAL USE OF A CONSTRUCTION JOINT AND/OR EXPANSION JOINT IN THE CAST-IN-PLACE CONCRETE TO CONTROL SHRINKAGE CRACKING.
2. OVERLAY MAY BE REQUIRED TO MEET SERVICE LIFE REQUIREMENTS. SEE DECK DESIGN OPTIONS AND SERVICE LIFE MEMO.

SHEET NUMBER 158

PARISH	CONTROL SECTION	STATE PROJECT
CALCASIEU	450-91	H.003931

	DESIGN	DETAIL	REVIEW	SERIES
CHECK	ARA	PMR	HKO	1 OF 1
		CHECK ARA		

CONCEPTUAL
PRELIMINARY
NOT FOR CONSTRUCTION
ENGINEER:
THOMAS P. MURPHY
LICENSE #:
45353
DATE:
3/9/2023

NO.	DATE	REVISION OR CHANGE ORDER DESCRIPTION	BY

B-10 MAIN SPAN
TYPICAL SECTION

I-10 CALCASIEU RIVER BRIDGE IMPROVEMENTS

DOTD LOUISIANA DEPARTMENT OF TRANSPORTATION & DEVELOPMENT
CBP CALCASIEU BRIDGE PARTNERS

TECHNICAL PROPOSAL PLANS
P:\(CJL) 4580 I-10 Calcasieu Bridge Replacement\10 CADD\Struct_Main\Technical Proposal Plans MAIN\11 - B-10 Main Span - Prestressed Post Tension Layout.dgn 5/11/2023 11:11:49 AM

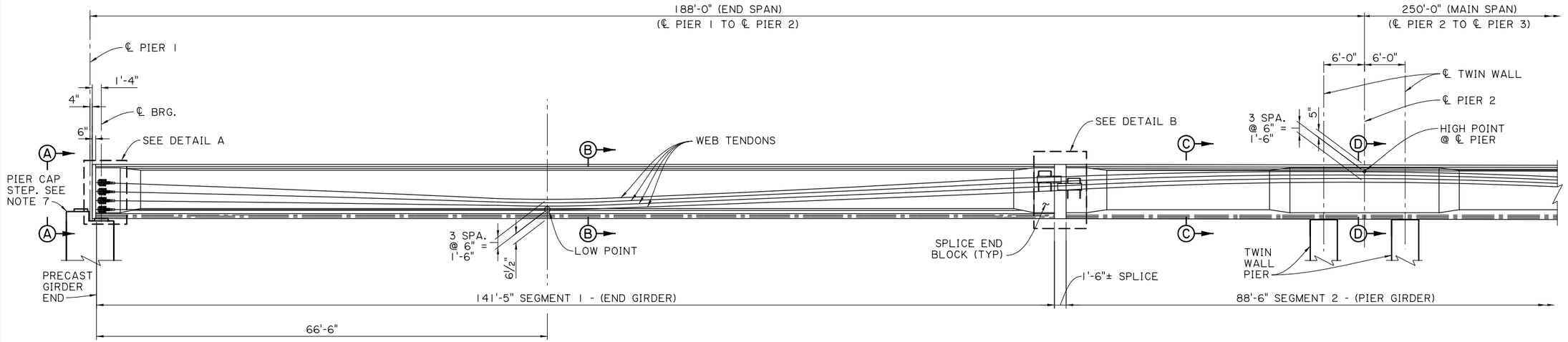

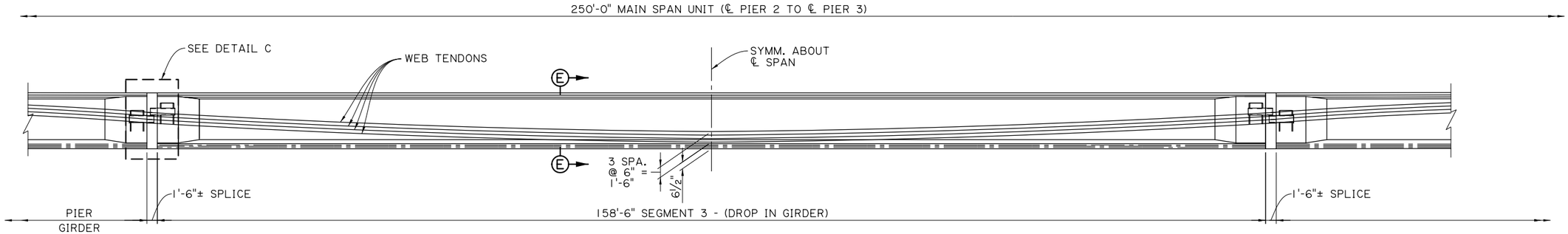

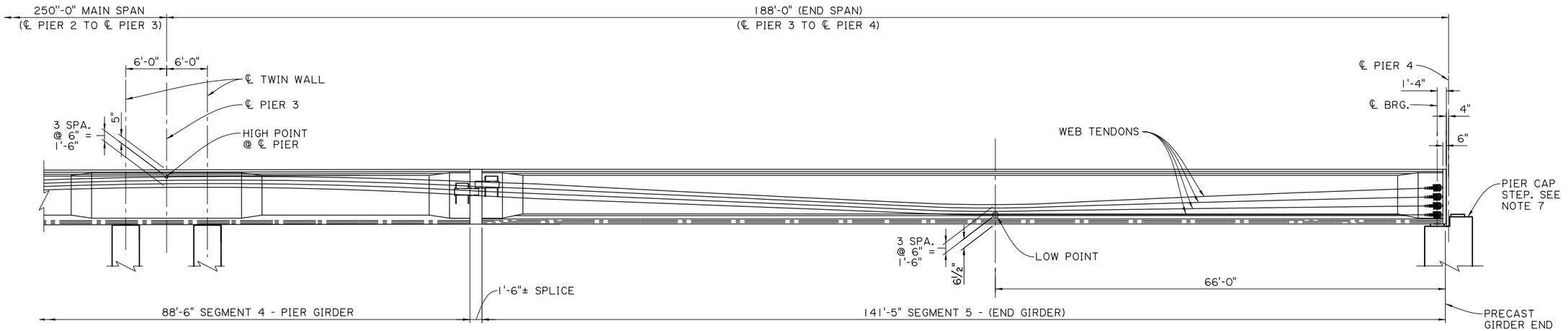

ELEVATION
SCALE: 1" = 1'-0"

NOTES:
1. FOR SECTION A-A, AND B-B SEE SHEET 12.
2. FOR SECTION C-C AND D-D, SEE SHEET 13.
3. FOR SECTION E-E, SEE SHEET 14.
4. FOR DETAIL A, SEE SHEET 15.
5. FOR DETAILS B AND C, SEE SHEET 17.
6. GIRDERS AT PIERS 1 AND 4 MAY REQUIRE DAPPED ENDS TO ACCOMODATE MODULAR EXPANSION JOINTS.
7. CAST STEPS IN PIERS 1 AND 4 FOLLOWING STRESSING OF MAIN SPAN POST-TENSIONING TENDONS.

SHEET NUMBER	159

PARISH	CONTROL SECTION	STATE PROJECT
CALCASIEU	450-91	H.003931

DESIGN	CHECK	DETAIL	CHECK	REVIEW	SERIES
ARA		DJC	ARA	HKO	1 OF 1

CONCEPTUAL
PRELIMINARY
NOT FOR CONSTRUCTION
ENGINEER: THOMAS P. MURPHY
LICENSE #: 45353
DATE: 3/9/2023

NO.	DATE	REVISION OR CHANGE ORDER DESCRIPTION	BY

STATE OF LOUISIANA — DEPARTMENT OF TRANSPORTATION AND DEVELOPMENT

B-10 MAIN SPAN
PRESTRESSED POST-TENSIONING LAYOUT

I-10 CALCASIEU RIVER BRIDGE IMPROVEMENTS

DOTD — LOUISIANA DEPARTMENT OF TRANSPORTATION & DEVELOPMENT

CBP — CALCASIEU BRIDGE PARTNERS

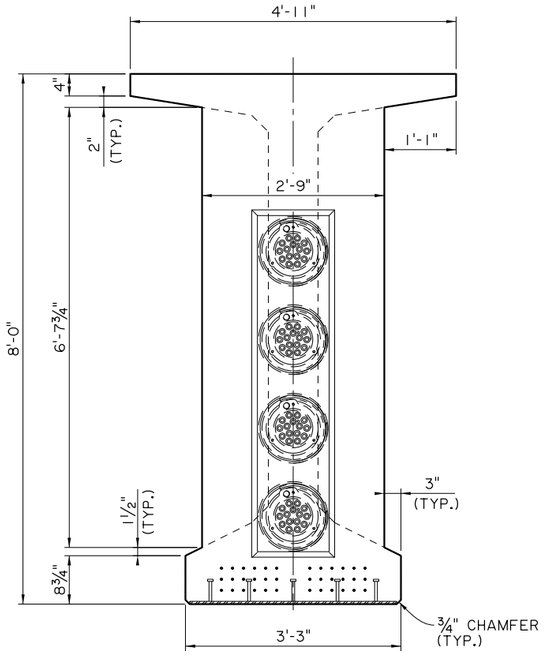

SECTION A-A
SEGMENTS 1 & 5 - END GIRDER DIMENSIONS
SCALE: ⅞" = 1'-0"

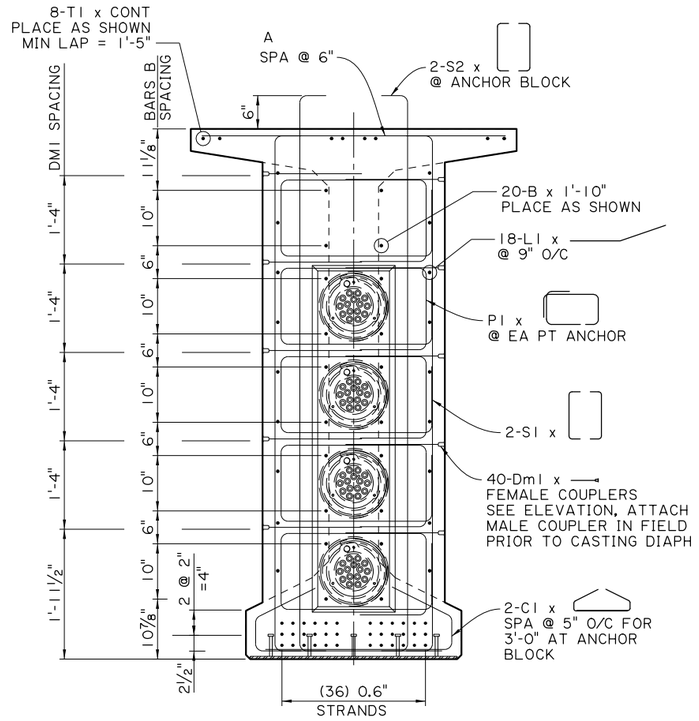

SECTION A-A
SEGMENTS 1 & 5 - END GIRDER REINFORCING DETAILS - INTERIOR GIRDER
SCALE: ⅞" = 1'-0"

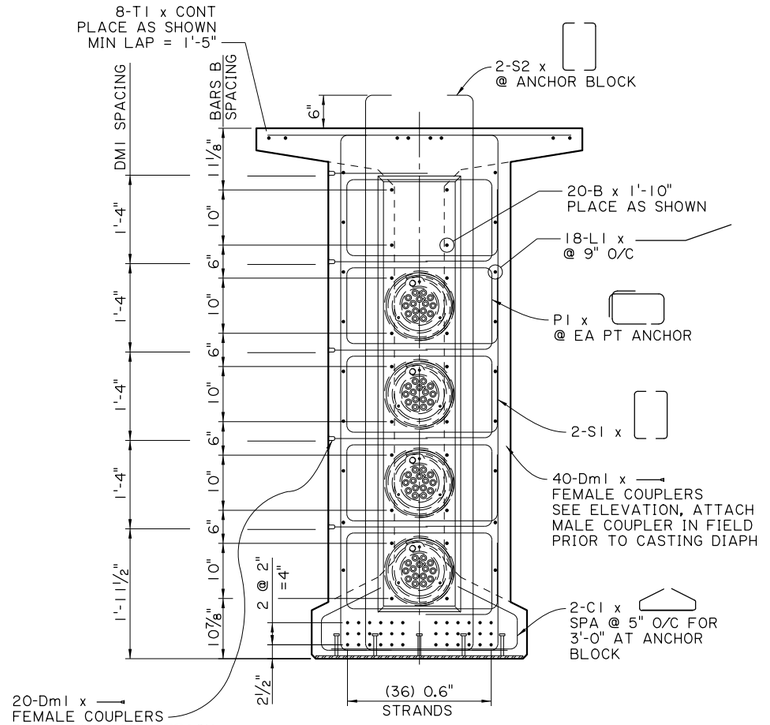

SECTION A-A
SEGMENTS 1 & 5 - END GIRDER REINFORCING DETAILS - EXTERIOR GIRDER
SCALE: ⅞" = 1'-0"

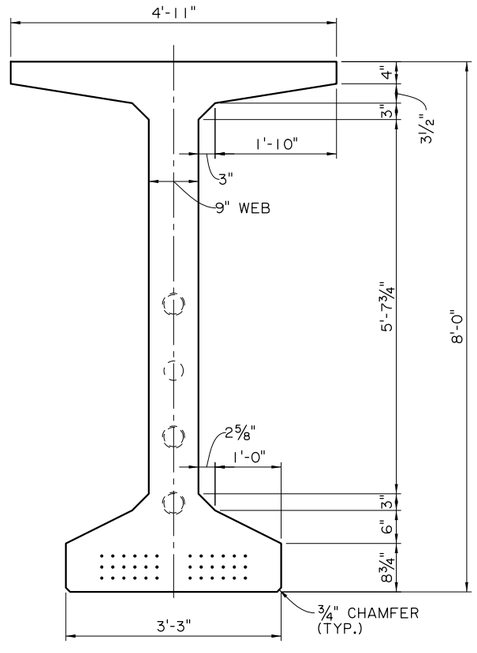

SECTION B-B
SEGMENTS 1 & 5 - END GIRDER DIMENSIONS
SCALE: ⅞" = 1'-0"

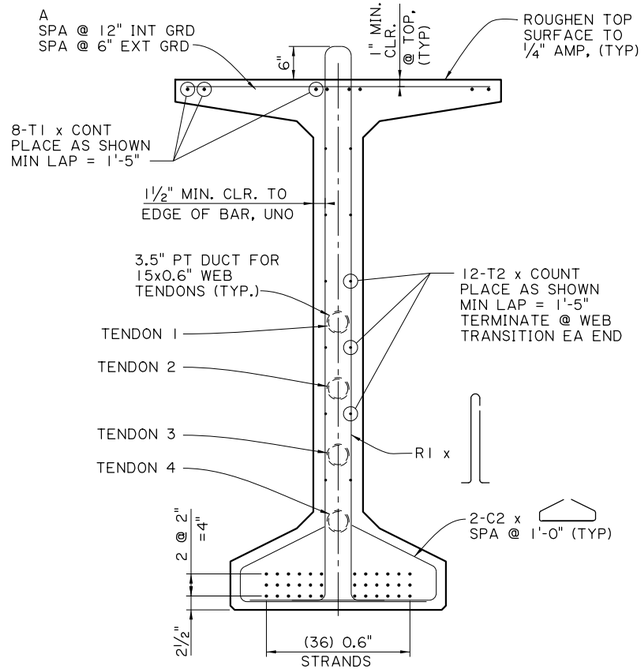

SECTION B-B
SEGMENTS 1 & 5 - END GIRDER REINFORCING DETAILS
SCALE: ⅞" = 1'-0"

SHEET NUMBER	160
PARISH	CALCASIEU
CONTROL SECTION	450-91
STATE PROJECT	H.003931

DESIGN	ARA
CHECK	
DETAIL	DJC
CHECK	ARA
REVIEW	HKO
SERIES = 1 OF 1	

CONCEPTUAL
PRELIMINARY
NOT FOR CONSTRUCTION
ENGINEER:
THOMAS P. MURPHY
LICENSE #:
45353
DATE:
3/9/2023

NO.	DATE	REVISION OR CHANGE ORDER DESCRIPTION	BY

B-10 MAIN SPAN
END GIRDER DETAILS - SEGMENTS 1 AND 5

I-10 CALCASIEU RIVER BRIDGE IMPROVEMENTS

LOUISIANA DEPARTMENT OF TRANSPORTATION & DEVELOPMENT

CALCASIEU BRIDGE PARTNERS

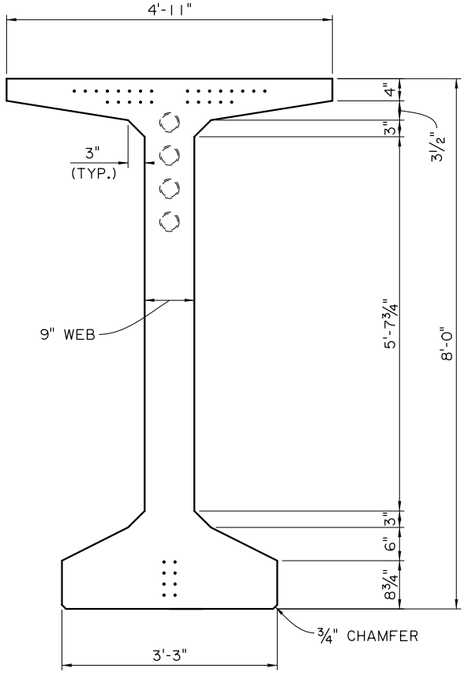

SECTION C-C
SEGMENTS 2 & 4 - PIER GIRDER
DIMENSIONS
SCALE: ⅞" = 1'-0"

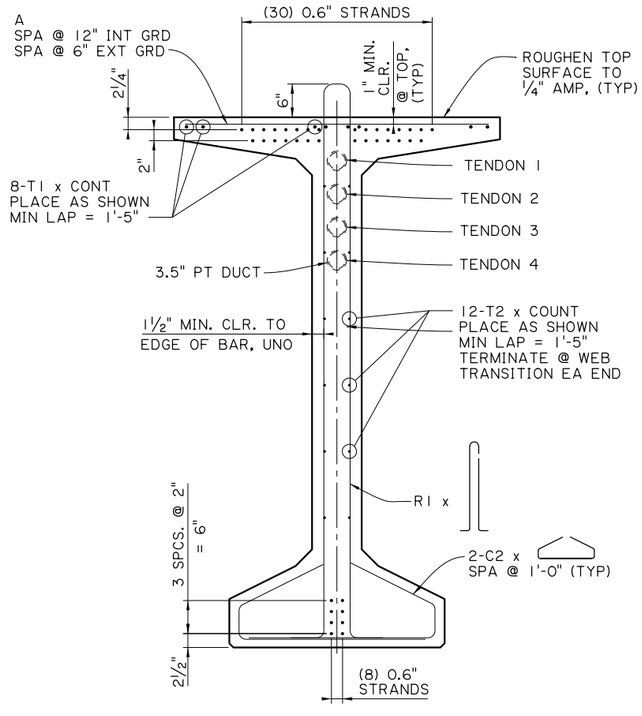

SECTION C-C
SEGMENTS 2 & 4 - PIER GIRDER
REINFORCING DETAILS
SCALE: ⅞" = 1'-0"

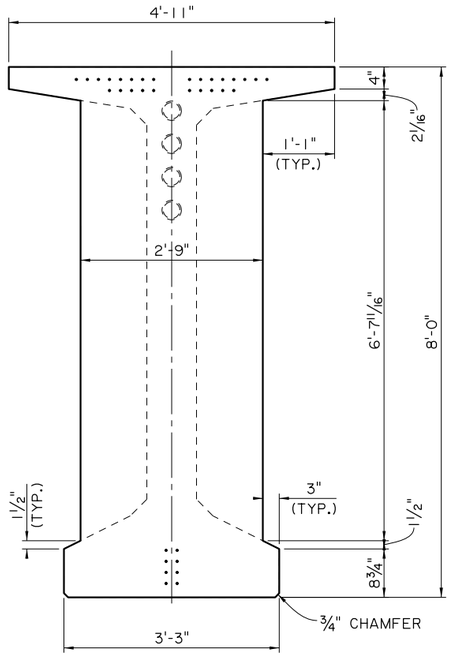

SECTION D-D
SEGMENTS 2 & 4 - PIER GIRDER
DIMENSIONS
SCALE: ⅞" = 1'-0"

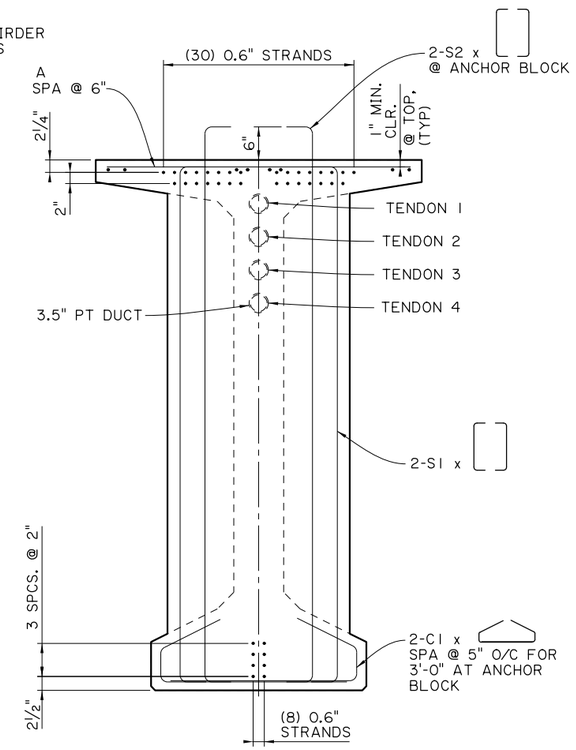

SECTION D-D
SEGMENTS 2 & 4 - PIER GIRDER
REINFORCING DETAILS
SCALE: ⅞" = 1'-0"

SHEET NUMBER 161

PARISH	CONTROL SECTION	STATE PROJECT
CALCASIEU	450-91	H.003931

DESIGN	CHECK	DETAIL	CHECK	REVIEW	SERIES = 1 OF 1
ARA		PMR	ARA	HKO	

CONCEPTUAL
PRELIMINARY
NOT FOR CONSTRUCTION
ENGINEER:
THOMAS P. MURPHY
LICENSE #:
45353
DATE:
3/9/2023

NO.	DATE	REVISION OR CHANGE ORDER DESCRIPTION	BY

B-10 MAIN SPAN

PIER GIRDER DETAILS - SEGMENTS 2 AND 4

I-10 CALCASIEU RIVER BRIDGE IMPROVEMENTS

LOUISIANA DEPARTMENT OF TRANSPORTATION & DEVELOPMENT

CALCASIEU BRIDGE PARTNERS

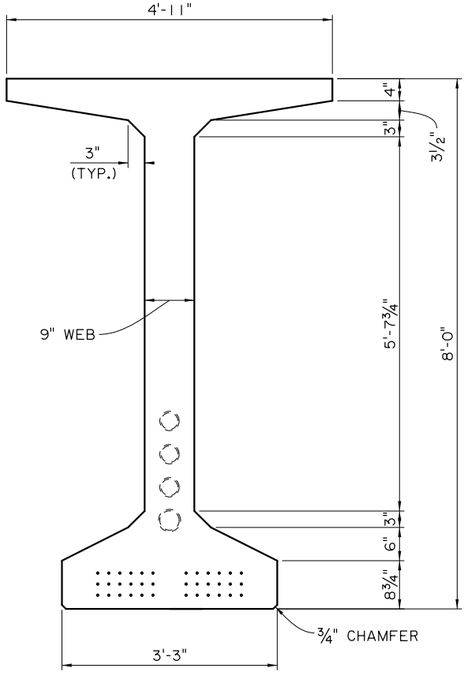

SECTION E-E
SEGMENT 3 - DROP IN GIRDER
DIMENSIONS
SCALE: ⅞" = 1'-0"

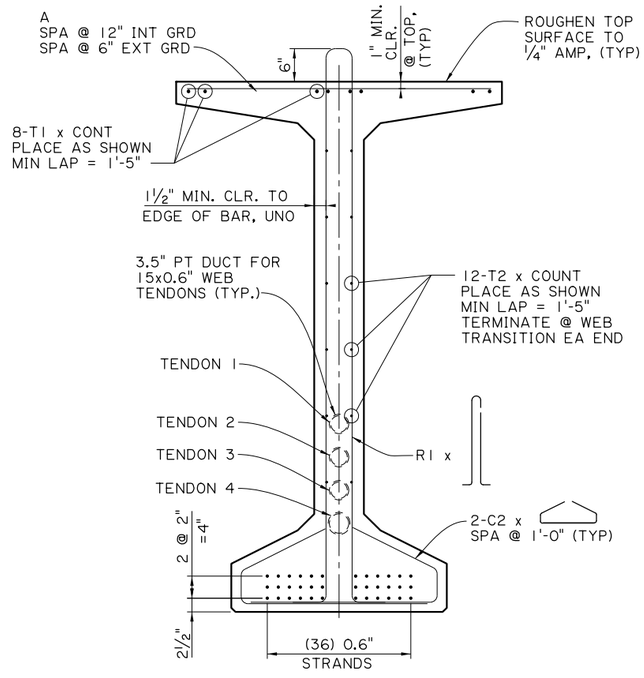

SECTION E-E
SEGMENT 3 - DROP IN GIRDER
REINFORCING DETAILS
SCALE: ⅞" = 1'-0"

TECHNICAL PROPOSAL PLANS

P:\(CJL) 4580 I-10 Calcasieu Bridge Replacement\10 CADD\Struct_Main\Technical Proposal Plans MAIN\14 - B-10 Main Span - Drop in Girder Details - Segment 3.dgn 5/11/2023 11:11:58 AM

SHEET NUMBER 162

PARISH	CONTROL SECTION	STATE PROJECT
CALCASIEU	450-91	H.003931

DESIGN	CHECK	DETAIL	CHECK	REVIEW	SERIES = 1 OF 1
ARA		PMR	ARA	HKO	

CONCEPTUAL
PRELIMINARY
NOT FOR CONSTRUCTION
ENGINEER: THOMAS P. MURPHY
LICENSE #: 45353
DATE: 3/9/2023

NO.	DATE	REVISION OR CHANGE ORDER DESCRIPTION	BY

B-10 MAIN SPAN

DROP IN GIRDER DETAILS - SEGMENT 3

I-10 CALCASIEU RIVER BRIDGE IMPROVEMENTS

DOTD LOUISIANA DEPARTMENT OF TRANSPORTATION & DEVELOPMENT

CBP CALCASIEU BRIDGE PARTNERS

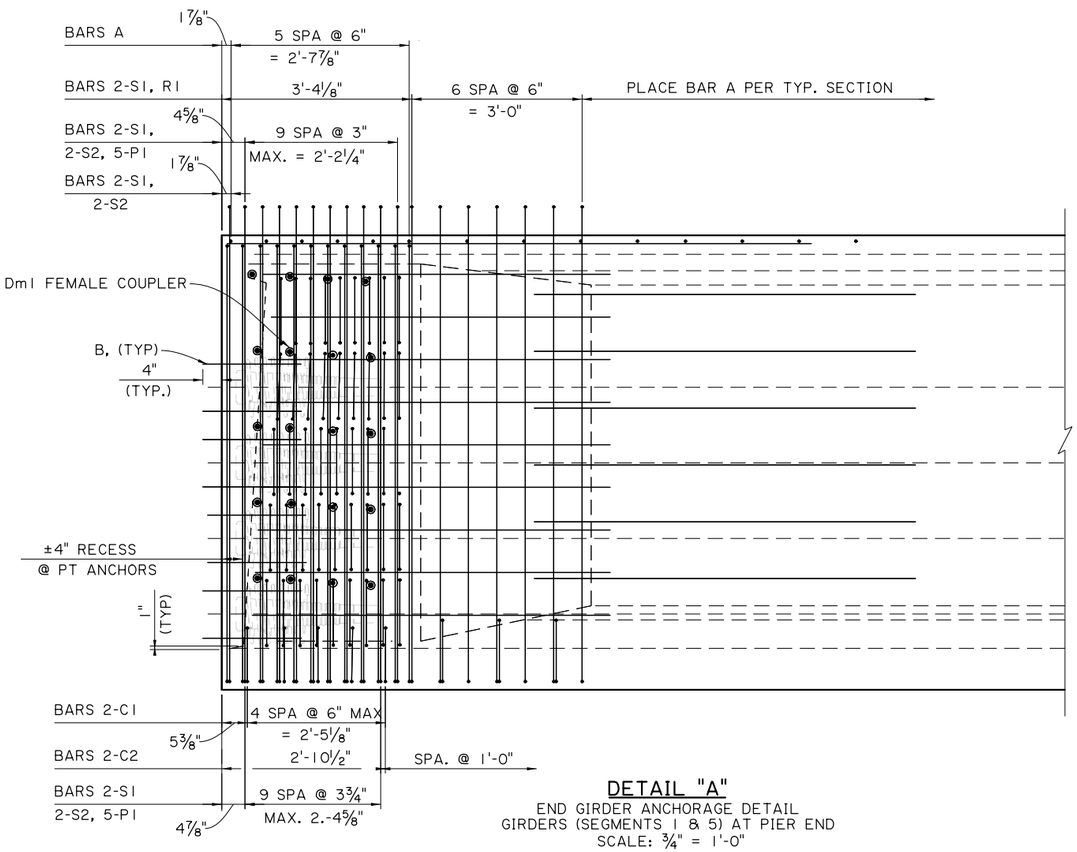

DETAIL "A"
END GIRDER ANCHORAGE DETAIL
GIRDERS (SEGMENTS 1 & 5) AT PIER END
SCALE: 3/4" = 1'-0"

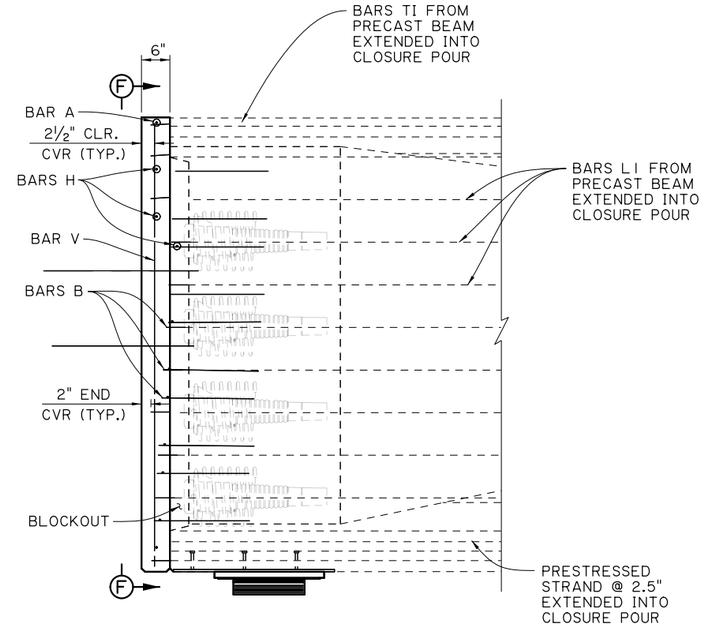

ELEVATION - END ANCHORAGE SECONDARY POUR
SCALE: 3/4" = 1'-0"

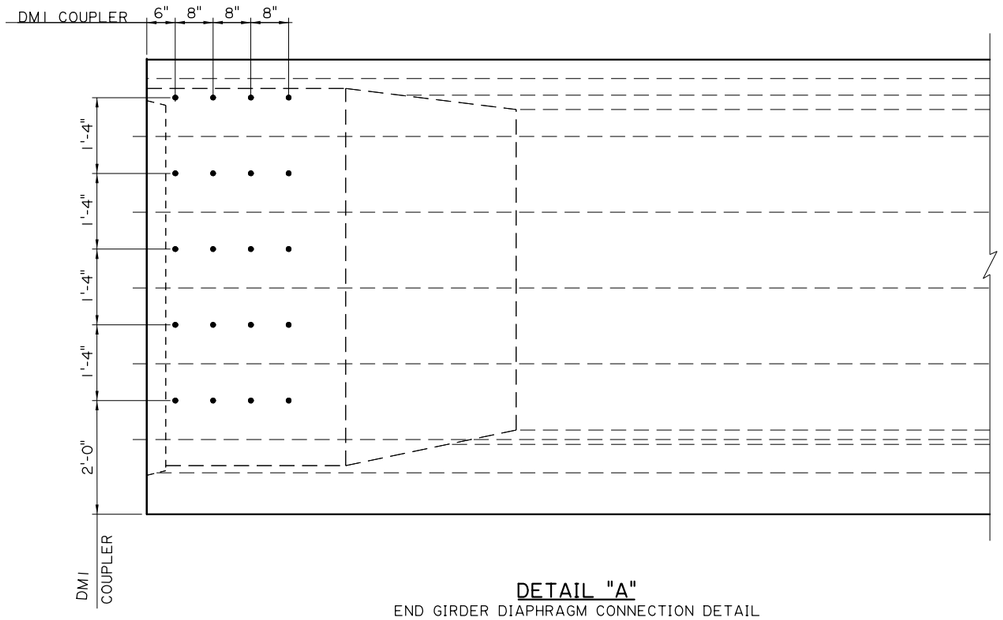

DETAIL "A"
END GIRDER DIAPHRAGM CONNECTION DETAIL
GIRDERS (SEGMENTS 1 & 5) AT PIER END
SCALE: 3/4" = 1'-0"

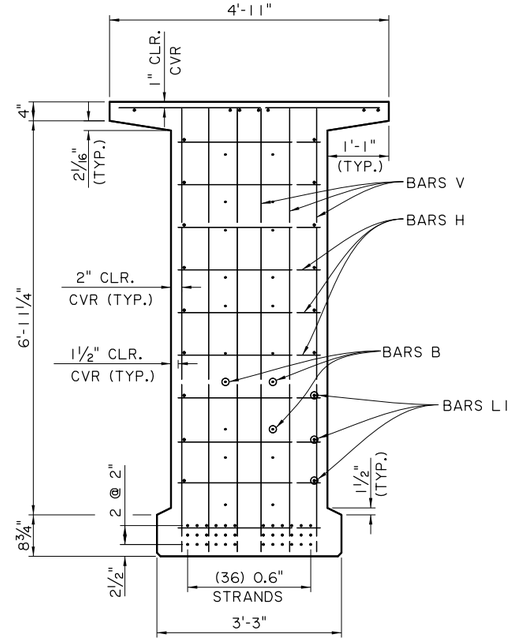

SECTION F-F
SECOUNDARY POUR REBAR DETAIL
GIRDERS (1 & 5) AT PIER END
SCALE: 3/4" = 1'-0"

SHEET NUMBER 163

PARISH	CONTROL SECTION	STATE PROJECT
CALCASIEU	450-91	H.003931

	DESIGN	DETAIL	REVIEW
	ARA	DJC	HKO
	CHECK	CHECK	SERIES = 1 OF 2

CONCEPTUAL
PRELIMINARY
NOT FOR CONSTRUCTION
ENGINEER: THOMAS P. MURPHY
LICENSE #: 45353
DATE: 3/9/2023

NO.	DATE	REVISION OR CHANGE ORDER DESCRIPTION	BY

STATE OF LOUISIANA — DEPARTMENT OF TRANSPORTATION AND DEVELOPMENT

B-10 MAIN SPAN
MISCELLANEOUS GIRDER DETAILS - 1

I-10 CALCASIEU RIVER BRIDGE IMPROVEMENTS

DOTD — LOUISIANA DEPARTMENT OF TRANSPORTATION & DEVELOPMENT

CBP — CALCASIEU BRIDGE PARTNERS

TECHNICAL PROPOSAL PLANS

P:\(CJL) 4580 I-10 Calcasieu Bridge Replacement\10 CADD\Struct_Main\Technical Proposal Plans MAIN\15 - B-10 Main Span - Miscellaneous Girder Details - 1.dgn 5/11/2023 11:12:01 AM

P:\(CJL) 4580 I-10 Calcasieu Bridge Replacement\10 CADD\Struct_Main\Technical Proposal Plans MAIN\16 - B-10 Main Span - Miscellaneous Girder Detail - 2.dgn 5/11/2023 11:12:05 AM

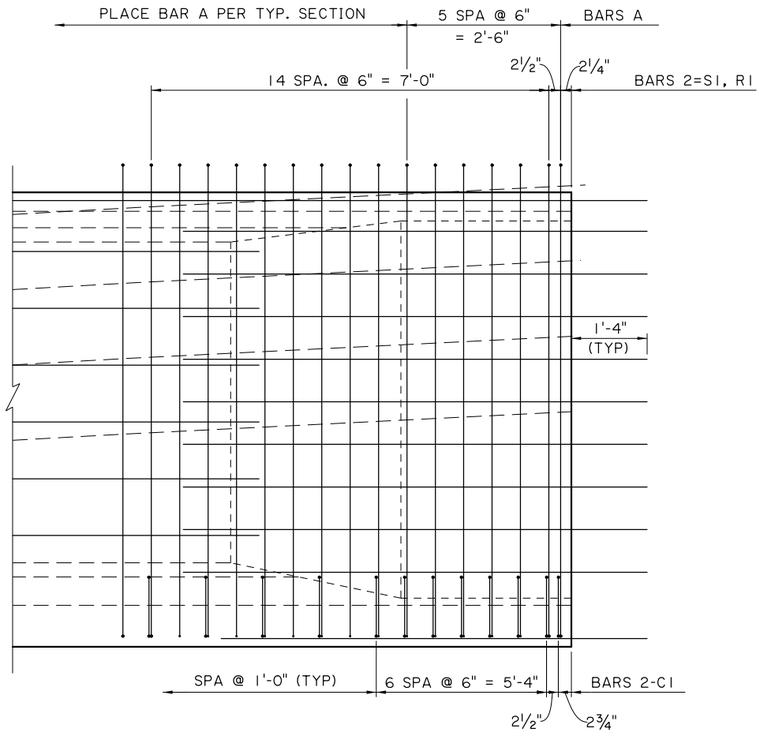

ELEVATION - GIRDER REINFORCING AT SPLICE END

SCALE: ¾" = 1'-0"

SHEET NUMBER	164
PARISH	CALCASIEU
CONTROL SECTION	450-91
STATE PROJECT	H.003931
DESIGN ARA / CHECK	
DETAIL DJC / CHECK ARA	
REVIEW HKO	SERIES = 2 OF 2

CONCEPTUAL
PRELIMINARY
NOT FOR CONSTRUCTION
ENGINEER: THOMAS P. MURPHY
LICENSE #: 45353
DATE: 3/9/2023

NO.	DATE	REVISION OR CHANGE ORDER DESCRIPTION	BY

B-10 MAIN SPAN

MISCELLANEOUS GIRDER DETAILS - 2

I-10 CALCASIEU RIVER BRIDGE IMPROVEMENTS

DOTD LOUISIANA DEPARTMENT OF TRANSPORTATION & DEVELOPMENT

CBP CALCASIEU BRIDGE PARTNERS

P:\(CJL) 4580 I-10 Calcasieu Bridge Replacement\10 CADD\Struct_Main\Technical Proposal Plans MAIN\17 - B-10 Main Span - Girder Splice Details.dgn 5/11/2023 11:12:08 AM

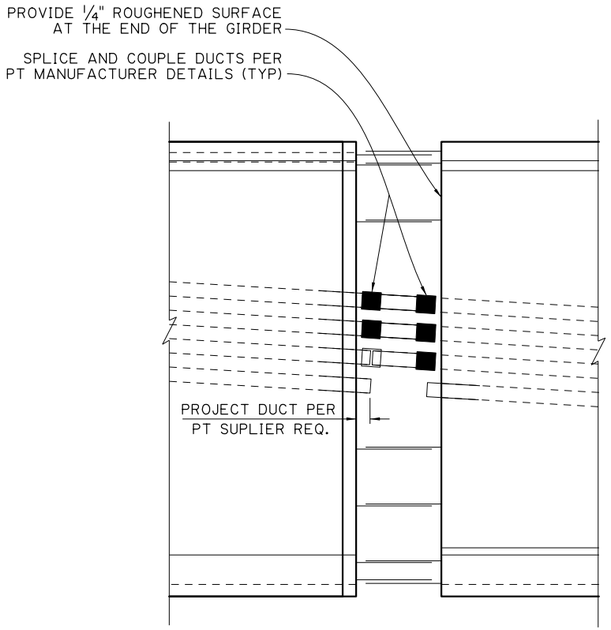

PT DUCT SPLICE DETAIL
(TYPICAL AT ALL SPLICES)
SCALE: 3/4" = 1'-0"

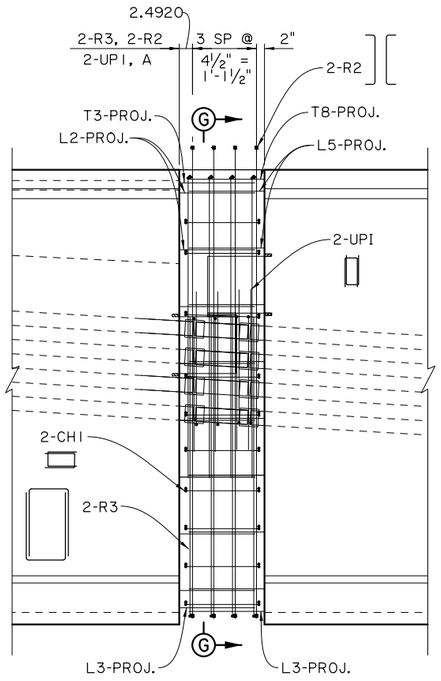

DETAIL "C"
SPLICE IN MAIN SPAN
SCALE: 3/4" = 1'-0"
(ERECTION CORBELS NOT SHOWN)

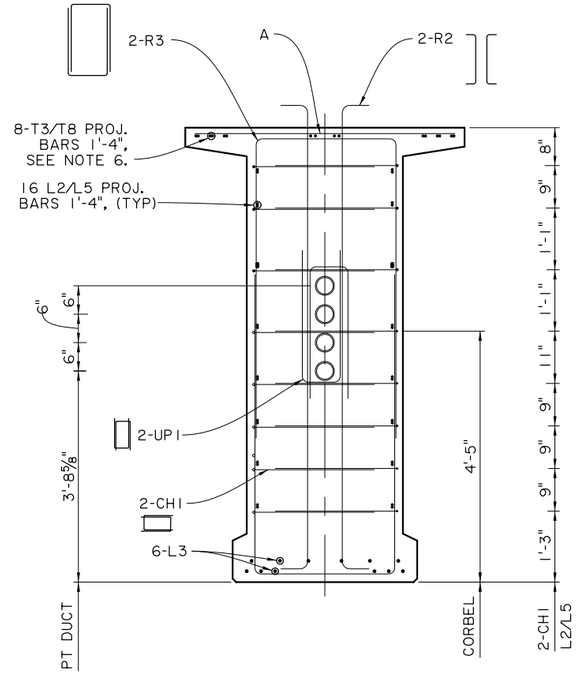

SECTION G-G
SPLICE REBAR
SCALE: 3/4" = 1'-0"

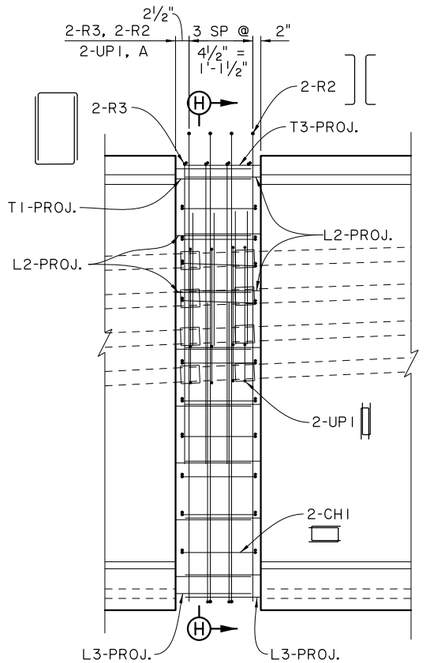

DETAIL "B"
SPLICE IN END SPANS
SCALE: 3/4" = 1'-0"
(ERECTION CORBELS NOT SHOWN)

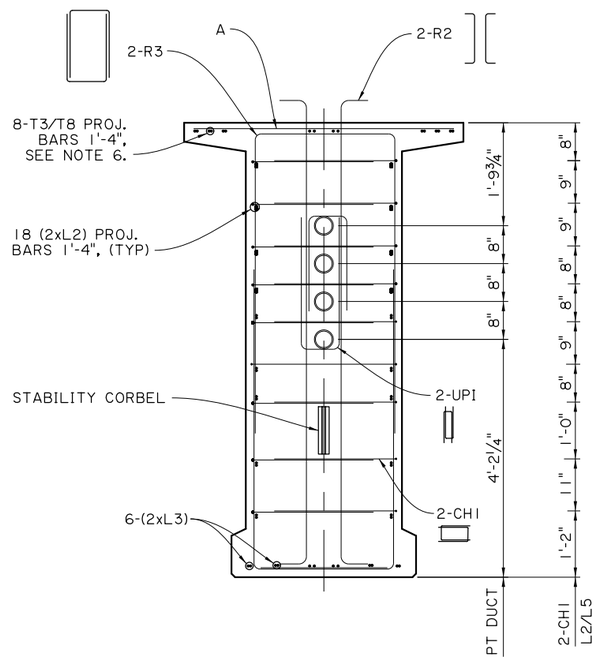

SECTION H-H
SPLICE REBAR DETAIL
SCALE: 3/4" = 1'-0"

NOTES:
1. REBAR TO BE PLACED AT SPLICE LOCATIONS AFTER ERECTING GIRDERS AND PRIOR TO FRAMING AND CASTING CIP CLOSURES.
2. USE BAR BEND DIAMETERS FOR STIRRUPS AND TIE BARS PER LADOT BRIDGE DETAILING GUIDE.
3. THE CLOSURE POUR WIDTH VARIES.
4. PIER SEGMENT SPLICES IN BOTH END SPAN AND MAIN SPAN ARE SHOWN HERE.
5. PROJECT T3, T8, AND L3 BARS 1'-4" FROM GIRDER ENDS.
6. END OF THE GIRDERS TO BE ROUGHENED TO AN AMPLITUDE OF 1/4" AT THE SPLICE LOCATIONS.

SHEET NUMBER 165

PARISH	CONTROL SECTION	STATE PROJECT
CALCASIEU	450-91	H.003931

DESIGN	DETAIL	REVIEW	SERIES
ARA	DJC	HKO	1 OF 1
CHECK	CHECK		
	ARA		

CONCEPTUAL
PRELIMINARY
NOT FOR CONSTRUCTION
ENGINEER:
THOMAS P. MURPHY
LICENSE #:
45353
DATE:
3/9/2023

NO.	DATE	REVISION OR CHANGE ORDER DESCRIPTION	BY

B-10 MAIN SPAN
GIRDER SPLICE DETAILS

I-10 CALCASIEU RIVER BRIDGE IMPROVEMENTS

DOTD LOUISIANA DEPARTMENT OF TRANSPORTATION & DEVELOPMENT

CBP CALCASIEU BRIDGE PARTNERS

TABLE OF DEAD LOAD DEFLECTION		
DUE TO DECK + SIDL + CREEP + SHRINKAGE (FT)		
LOCATION		GIRDER LINES 1-14
SPAN 1	0	
	1	
	2	
	3	
	4	
	5	
	6	
	7	
	8	
	9	
	10	
SPAN 2	10	
	11	
	12	
	13	
	14	
	15	
	16	
	17	
	18	
	19	
	20	
SPAN 3	20	
	21	
	22	
	23	
	24	
	25	
	26	
	27	
	28	
	29	
	30	

TABLE OF DECK + HAUNCH THICKNESS		
GIRDER		
LOCATION		"X" (IN.)
SPAN 1	0	
	1	
	2	
	3	
	4	
	5	
	6	
	7	
	8	
	9	
	10	
SPAN 2	10	
	11	
	12	
	13	
	14	
	15	
	16	
	17	
	18	
	19	
	20	
SPAN 3	20	
	21	
	22	
	23	
	24	
	25	
	26	
	27	
	28	
	29	
	30	

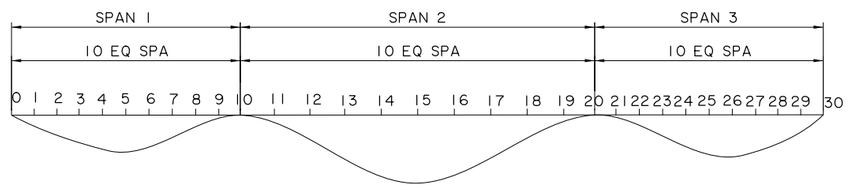

DEAD LOAD DEFLECTION DIAPHRAGM

DOWNWARD DEFLECTION IS POSITIVE; UPWARD DEFLECTION IS NEGITIVE

TECHNICAL PROPOSAL PLANS

P:\(CJL) 4580 I-10 Calcasieu Bridge Replacement\10 CADD\Struct_Main\Technical Proposal Plans MAIN\18 - B-10 Main Span - Girder Geometry Details.dgn 5/11/2023 11:12:12 AM

SHEET NUMBER 166

PARISH	CONTROL SECTION	STATE PROJECT
CALCASIEU	450-91	H.003931

DESIGN	CHECK	DETAIL	CHECK	REVIEW	SERIES = 1 OF 1
ARA		DJC	ARA	HKO	

CONCEPTUAL

PRELIMINARY

NOT FOR CONSTRUCTION

ENGINEER: THOMAS P. MURPHY

LICENSE #: 45353

DATE: 3/9/2023

NO.	DATE	REVISION OR CHANGE ORDER DESCRIPTION	BY

B-10 MAIN SPAN

GIRDER GEOMETRY DETAILS

I-10 CALCASIEU RIVER BRIDGE IMPROVEMENTS

LOUISIANA DEPARTMENT OF TRANSPORTATION & DEVELOPMENT

CALCASIEU BRIDGE PARTNERS

TECHNICAL PROPOSAL PLANS
P:\(CJL) 4580 I-10 Calcasieu Bridge Replacement\10 CADD\Struct_Main\Technical Proposal Plans MAIN\19 - B-10 Main Span - End Pier Diaphragm Details.dgn 5/11/2023 11:12:15 AM

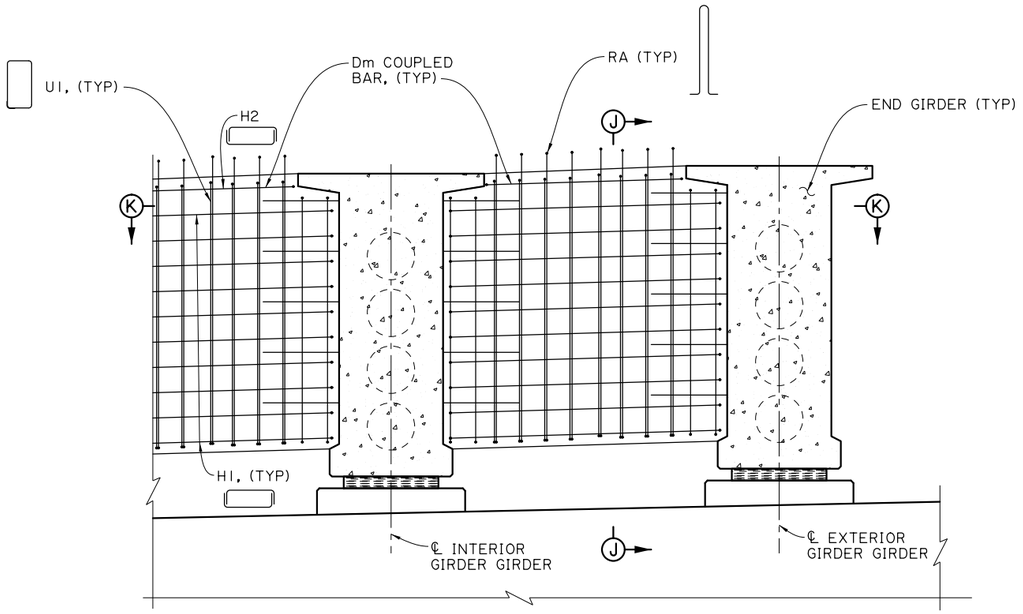

ELEVATION
END GIRDERS (SEGMENTS 1 & 5)
AT PIERS 1 AND 4
SCALE: ½" = 1'-0"

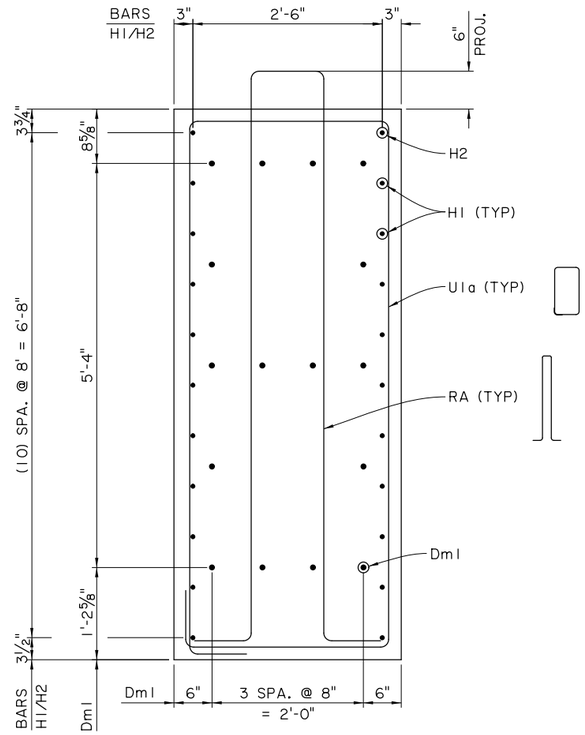

SECTION J-J
SCALE: ½" = 1'-0"

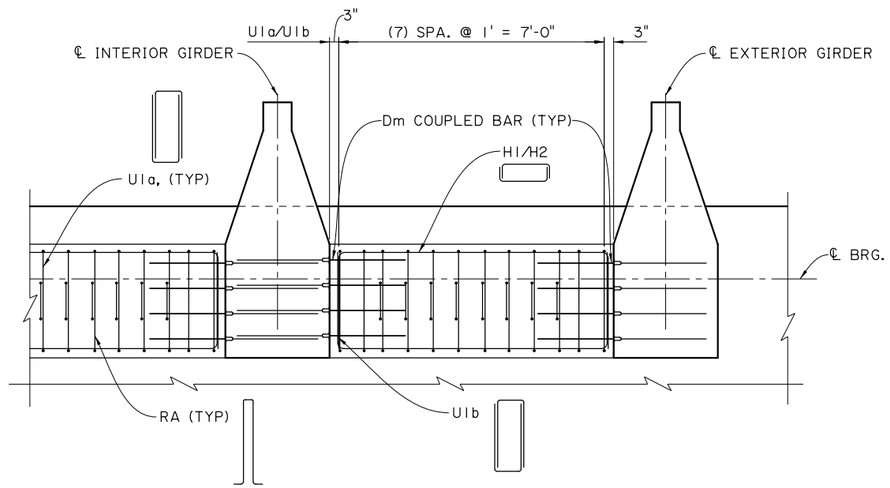

SECTION K-K
SCALE: ½" = 1'-0"

NOTES:
1. SEE SHEET 9 FOR GIRDER SPACING AND SHEETS 12 THRU 14 FOR GIRDER DIMENSIONS.
2. COVER DIMENSIONS ARE CLEAR DIMENSIONS, UNLESS NOTED OTHERWISE. REINFORCING BAR DIMENSIONS SHOWN ARE OUT-TO-OUT OF BAR.
3. DIAPHRAGM SHALL BE CLASS A1 CONCRETE WITH A 28-DAY STRENGTH OF f'c = 4,500 PSI.
4. H2 BARS TO BE PARALLEL TO TOP OF DIAPHRAGM.
5. SEE SHEET 22 FOR CONSTRUCTION SEQUENCE.

SHEET NUMBER 167

PARISH	CONTROL SECTION	STATE PROJECT
CALCASIEU	450-91	H.003931

	DESIGN	CHECK	DETAIL	CHECK	REVIEW	SERIES
	ARA		DJC	ARA	HKO	1 OF 1

CONCEPTUAL
PRELIMINARY
NOT FOR CONSTRUCTION
ENGINEER:
THOMAS P. MURPHY
LICENSE #:
45353
DATE:
3/9/2023

NO.	DATE	REVISION OR CHANGE ORDER DESCRIPTION	BY

B-10 MAIN SPAN
END PIER DIAPHRAGM DETAILS

I-10 CALCASIEU RIVER BRIDGE IMPROVEMENTS

DOTD LOUISIANA DEPARTMENT OF TRANSPORTATION & DEVELOPMENT
CBP CALCASIEU BRIDGE PARTNERS

TECHNICAL PROPOSAL PLANS
P:\(CJL) 4580 I-10 Calcasieu Bridge Replacement\10 CADD\Struct_Main\Technical Proposal Plans MAIN\20 - B-10 Main Span - Interior Pier Diaphragm Details.dgn 5/11/2023 11:12:19 AM

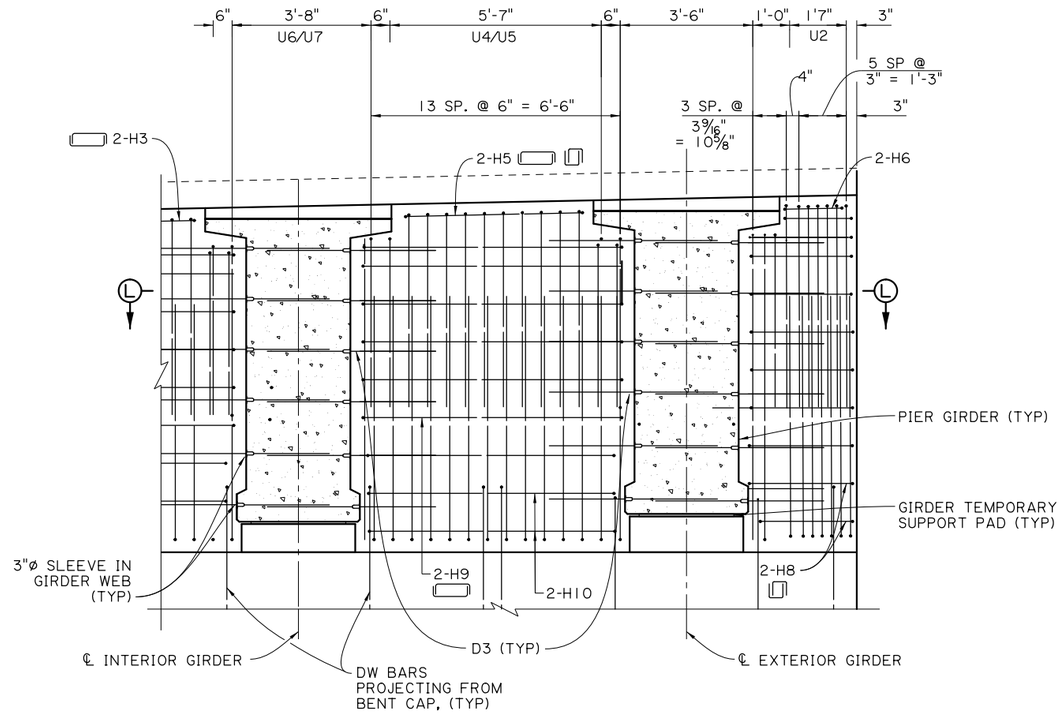

ELEVATION

PIER GIRDERS
(SEGMENTS 2 & 4)
AT PIERS 2 AND 3
SCALE: ½" = 1'-0"

NOTE: VERTICAL REINFORCEMENT FROM PIER WALLS EXTENDS INTO DIAPHRAGM TO MAKE THE WALLS INTEGRAL WITH THE SUPERSTRUCTURE.

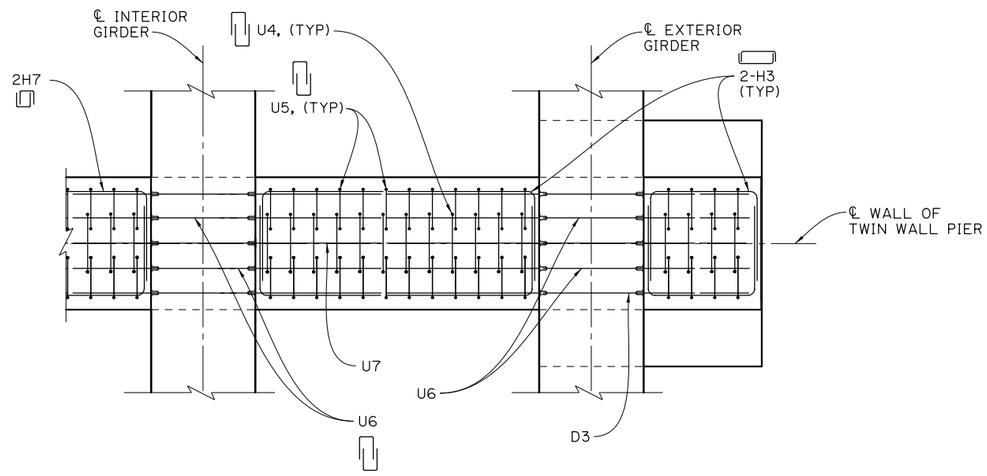

SECTION L-L

SCALE: ½" = 1'-0"

NOTES:
1. H4, H5, AND H6 BARS TO BE POSITIONED PARALLEL TO TOP OF DIAPHRAGM.
2. DIAPHRAGM SHALL BE CLASS A2 CONCRETE WITH A 28-DAY STRENGTH OF f'c = 6,500 PSI.
3. SEE SHEET 22 FOR ASSUMED SEQUENCE OF CONSTRUCTION.

SHEET NUMBER 168

PARISH	CONTROL SECTION	STATE PROJECT
CALCASIEU	450-91	H.003931

	DESIGN	DETAIL	REVIEW
CHECK	ARA	DJC	HKO
CHECK		ARA	SERIES = 1 OF 1

CONCEPTUAL
PRELIMINARY
NOT FOR CONSTRUCTION
ENGINEER:
THOMAS P. MURPHY
LICENSE #:
45353
DATE:
3/9/2023

NO.	DATE	REVISION OR CHANGE ORDER DESCRIPTION	BY

B-10 MAIN SPAN
INTERIOR PIER DIAPHRAGM DETAILS

I-10 CALCASIEU RIVER BRIDGE IMPROVEMENTS

DOTD LOUISIANA DEPARTMENT OF TRANSPORTATION & DEVELOPMENT
CBP CALCASIEU BRIDGE PARTNERS

P:\(CJL) 4580 I-10 Calcasieu Bridge Replacement\10 CADD\Struct_Main\Technical Proposal Plans MAIN\21 - B-10 Main Span - Deck Drainage Details.dgn 5/11/2023 11:12:22 AM

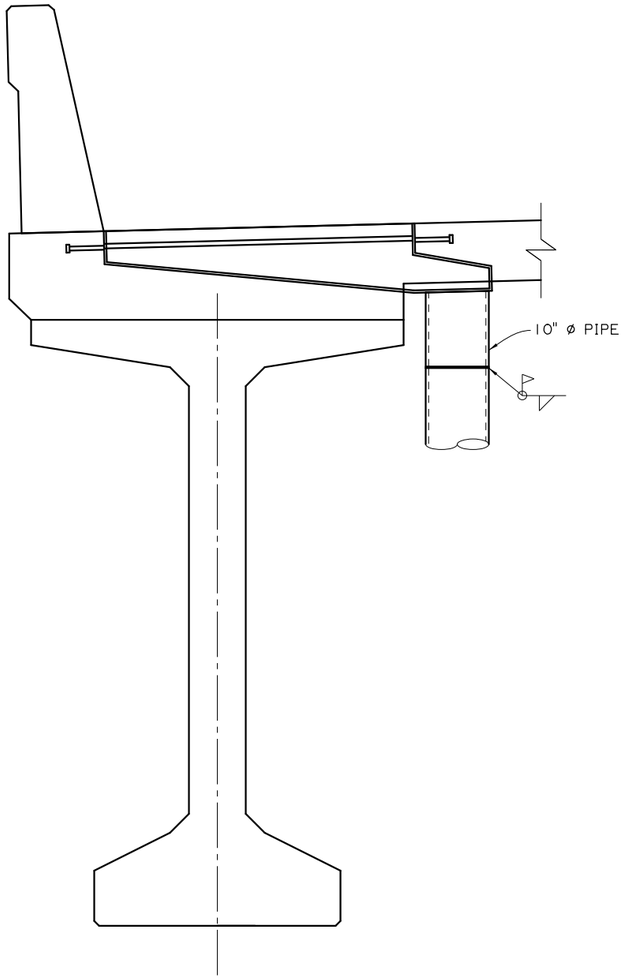

SCUPPER DETAIL
SCALE: 1"=1'-0"

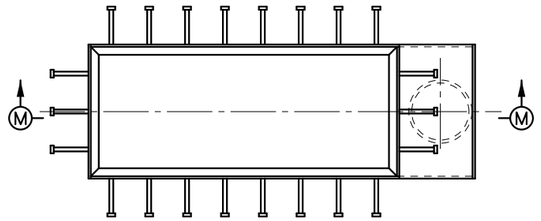

SCUPPER PLAN
SCALE: 1"=1'-0"



SECTION M-M
SCALE: 1"=1'-0"

SCUPPER DRAIN STATIONS		
STATION (SCUPPER CENTERLINE)	STRUCTURE NO.	
	EASTBOUND	WESTBOUND
2496+97.00	850	800
2498+85.00	852	802
2501+15.00	854	804
2503+03.00	856	806

NOTES:
1. PIPING SYSTEM FROM SCUPPERS WILL DISCHARGE FROM SUBSTRUCTURE UNITS AT GROUND OR WATER LEVEL.
2. SCUPPER GRATING NOT SHOWN AND TO BE DETERMINED IN FINAL DESIGN TOGETHER WITH OTHER DETAILS.

SHEET NUMBER 169
PARISH CALCASIEU
CONTROL SECTION 450-91
STATE PROJECT H.003931
DESIGN ARA CHECK
DETAIL PMR CHECK ARA
REVIEW HKO SERIES = 1 OF 1

CONCEPTUAL
PRELIMINARY
NOT FOR CONSTRUCTION
ENGINEER:
THOMAS P. MURPHY
LICENSE #:
45353
DATE:
3/9/2023

NO. DATE REVISION OR CHANGE ORDER DESCRIPTION BY

B-10 MAIN SPAN
DECK DRAINAGE DETAILS

I-10 CALCASIEU RIVER BRIDGE IMPROVEMENTS

DOTD LOUISIANA DEPARTMENT OF TRANSPORTATION & DEVELOPMENT
CBP CALCASIEU BRIDGE PARTNERS

TECHNICAL PROPOSAL PLANS
P:\(CJL) 4580 I-10 Calcasieu Bridge Replacement\10 CADD\Struct_Main\Technical Proposal Plans MAIN\22 - B-10 Main Span - Sequence of Construction.dgn
5/11/2023 11:12:25 AM

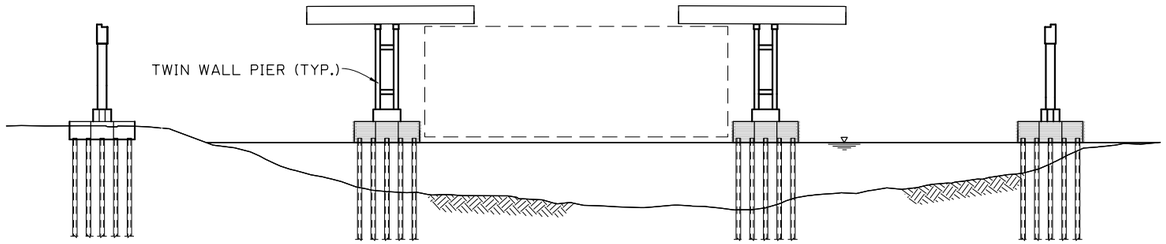

STAGE 1
INSTALL PIER GIRDER SEGMENTS AND
POUR FULL DEPTH DIAPHRAGMS
SCALE: 1"=50'-0"

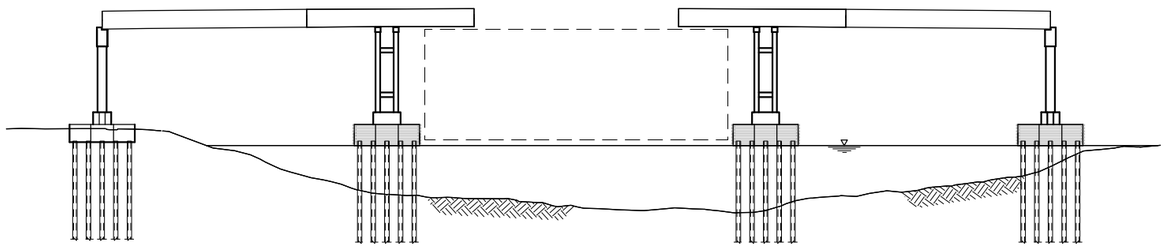

STAGE 2
INSTALL END SEGMENTS AND COMPLETE SPLICES
SCALE: 1"=50'-0"

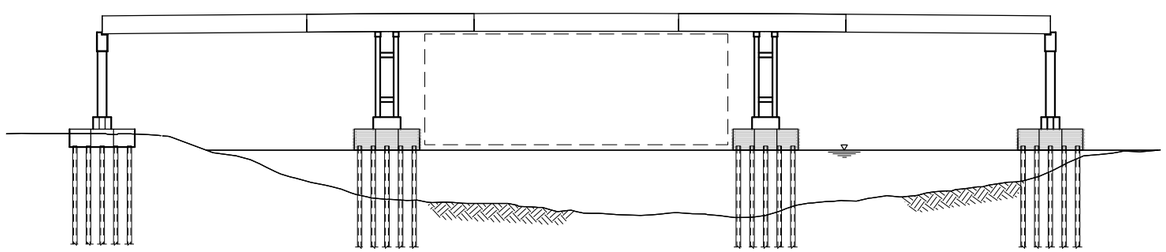

STAGE 3
DROP - IN MAIN SPAN SEGMENT AND COMPLETE SPLICES
INSTALL AND TENSION CONTINUITY PT. CAST DECK, BARRIERS, ETC.
CAST STEP IN PIERS 1 AND 4 FOLLOWING STRESSING OF MAIN SPAN POST-TENSIONING.
SCALE: 1"=50'-0"

ERECTION NOTES:
- WALL PIERS MADE INTEGRAL WITH SUPERSTRUCTURE WITH DIAPHRAGM POURS IN STAGE 1.
- ERECTION CORBELS EXTEND FROM ENDS OF SEGMENTS.
- CRANE PLACES END SEGMENT ON END PIER AND CORBEL OF PIER SEGMENT IN STAGE 2. TWIN WALL PIER PROVIDES SUPPORT WHILE CAST-IN-PLACE SPLICE IS COMPLETED.

WHILE NOT NEEDED BASED ON CURRENT STATUS OF DESIGN:
- VERTICAL POST-TENSIONING MAY BE PROVIDED AT MAIN SPAN WALL PIER AS NECESSARY TO CONTROL ERECTION STRESSES.
- ERECTION STRESSES MAY REQUIRE ONE GIRDER PT TENDON TO BE DISCONTINUOUS AND INSTALLED/STRESSED AT END OF STAGE 2. REMAINING TENDONS TO BE INSTALLED FULL-LENGTH OF 3 SPAN UNIT AND STRESSED FOLLOWING STAGE 3.

FOR MORE INFORMATION, SEE CONSTRUCTION STAGING MEMO.

DECK POUR SEQUENCE:
2 STAGES: POUR POSITIVE MOMENT REGIONS FOLLOWED BY NEGATIVE MOMENT REGIONS.

SHEET NUMBER 170

PARISH	CONTROL SECTION	STATE PROJECT
CALCASIEU	450-91	H.003931

DESIGN	CHECK	DETAIL	CHECK	REVIEW	SERIES
ARA		PMR	ARA	HKO	1 OF 1

CONCEPTUAL
PRELIMINARY
NOT FOR CONSTRUCTION
ENGINEER: THOMAS P. MURPHY
LICENSE #: 45353
DATE: 3/9/2023

NO.	DATE	REVISION OR CHANGE ORDER DESCRIPTION	BY

B-10 MAIN SPAN
SEQUENCE OF CONSTRUCTION

I-10 CALCASIEU RIVER BRIDGE IMPROVEMENTS

LOUISIANA DEPARTMENT OF TRANSPORTATION & DEVELOPMENT

CALCASIEU BRIDGE PARTNERS

TECHNICAL PROPOSAL PLANS
P:\(CJL) 4580 I-10 Calcasieu Bridge Replacement\10 CADD\Struct_East Appr\Technical Proposal Plans East Approach\31 - B-10 East Approach Span - General Plan and Elevation - 1.dgn 5/11/2023 10:57:38 AM

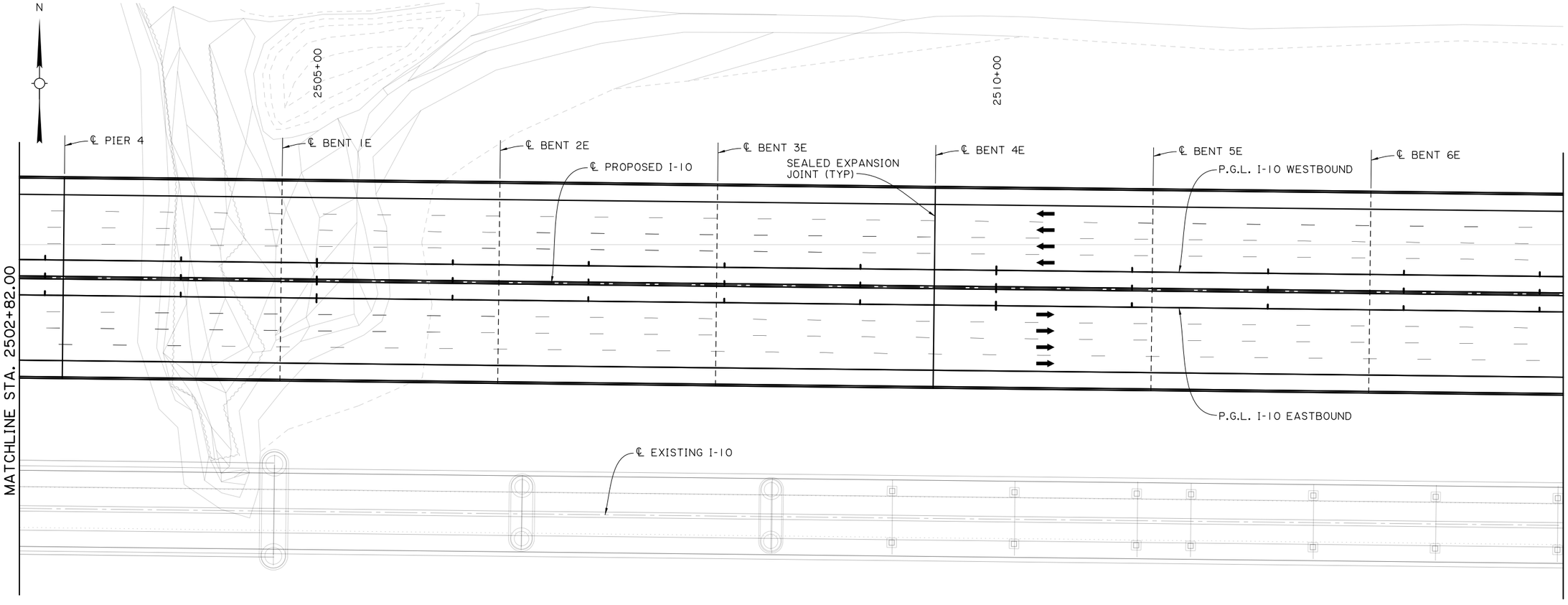

PLAN
SCALE: 1" = 40'-0"

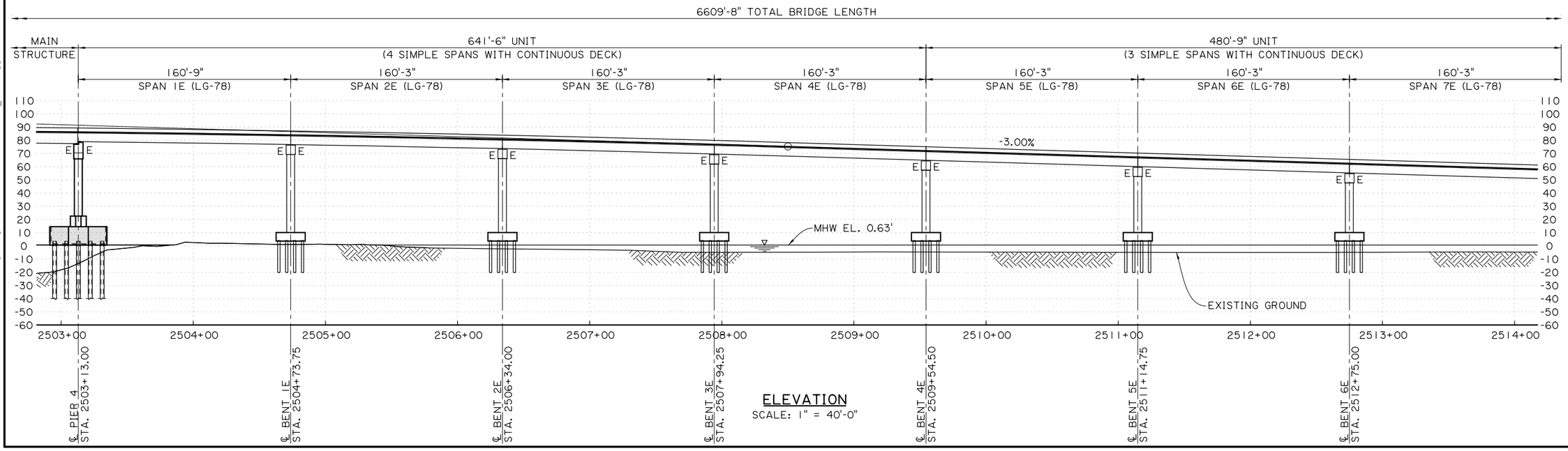

ELEVATION
SCALE: 1" = 40'-0"

SHEET NUMBER	171

PARISH	CONTROL SECTION	STATE PROJECT
CALCASIEU	450-91	H.003931

DESIGN	MAM	DETAIL	PMR	REVIEW	HKO
CHECK	HKO	CHECK	MAM	SERIES	1 OF 3

CONCEPTUAL
PRELIMINARY
NOT FOR CONSTRUCTION
ENGINEER:
MOHAMMAD MAJD
LICENSE #: 46831
DATE: 3/9/2023

NO.	DATE	REVISION OR CHANGE ORDER DESCRIPTION	BY

B-10 EAST APPROACH SPAN

GENERAL PLAN AND ELEVATION - 1

I-10 CALCASIEU RIVER BRIDGE IMPROVEMENTS

DOTD LOUISIANA DEPARTMENT OF TRANSPORTATION & DEVELOPMENT

CBP CALCASIEU BRIDGE PARTNERS

TECHNICAL PROPOSAL PROPOSAL PLANS
P:\(CJL) 4580 I-10 Calcasieu Bridge Replacement\10 CADD\Struct_East Appr\Technical Proposal Plans East Approach\32 - B-10 East Approach Span - General Plan and Elevation - 2.dgn 5/11/2023 10:57:43 AM

N

MATCHLINE STA. 2514+17.00

MATCHLINE STA. 2525+10.00

2515+00 2520+00 2525+00

℄ BENT 7E ℄ BENT 8E ℄ BENT 9E ℄ BENT 10E ℄ BENT 11E ℄ BENT 12E ℄ BENT 13E ℄ BENT 14E

℄ PROPOSED I-10

SEALED EXPANSION JOINT (TYP)

P.G.L. I-10 WESTBOUND

P.G.L. I-10 EASTBOUND

℄ EXISTING I-10

PLAN
SCALE: 1" = 40'-0"

P.V.I. 2519+00.00
ELEV. 43.74'
320' V.C.

6609'-8" TOTAL BRIDGE LENGTH

480'-9" UNIT (3 SIMPLE SPANS WITH CONTINUOUS DECK)			383'-3" UNIT (3 SIMPLE SPANS WITH CONTINUOUS DECK)			371'-0" UNIT (3 SIMPLE SPANS WITH CONTINUOUS DECK)	
160'-3" SPAN 8E (LG-78)	160'-3" SPAN 9E (LG-78)	160'-3" SPAN 10E (LG-78)	127'-9" SPAN 11E (LG-63)	127'-9" SPAN 12E (LG-63)	127'-9" SPAN 13E (LG-63)	123'-8" SPAN 14E (LG-63)	123'-8" SPAN 15E (LG-63)

110 100 90 80 70 60 50 40 30 20 10 0 -10 -20 -30 -40 -50 -60

-1.00%

MHW EL. 0.63'

EXISTING GROUND

2515+00 2516+00 2517+00 2518+00 2519+00 2520+00 2521+00 2522+00 2523+00 2524+00 2525+00

℄ BENT 7E STA. 2514+35.25
℄ BENT 8E STA. 2515+95.50
℄ BENT 9E STA. 2517+55.75
℄ BENT 10E STA. 2519+16.00
℄ BENT 11E STA. 2520+43.75
℄ BENT 12E STA. 2521+71.50
℄ BENT 13E STA. 2522+99.25
℄ BENT 14E STA. 2524+22.92

ELEVATION
SCALE: 1" = 40'-0"

SHEET NUMBER	172
PARISH	CALCASIEU
CONTROL SECTION	450-91
STATE PROJECT	H.003931
DESIGN MAM / CHECK HKO	
DETAIL PMR / CHECK MAM	
REVIEW HKO	SERIES = 2 OF 3

CONCEPTUAL
PRELIMINARY
NOT FOR CONSTRUCTION
ENGINEER:
MOHAMMAD MAJD
LICENSE #: 46831
DATE: 3/9/2023

NO.	DATE	REVISION OR CHANGE ORDER DESCRIPTION	BY

B-10 EAST APPROACH SPAN
GENERAL PLAN AND ELEVATION - 2

I-10 CALCASIEU RIVER BRIDGE IMPROVEMENTS

DOTD LOUISIANA DEPARTMENT OF TRANSPORTATION & DEVELOPMENT

CBP CALCASIEU BRIDGE PARTNERS

P:\(CJU) 4580 I-10 Calcasieu Bridge Replacement\10 CADD\2023-05-25 Technical Proposal Plans Update\33 - B-10 East Approach Span - General Plan and Elevation - 3.dgn 5/25/2023 1:02:06 PM

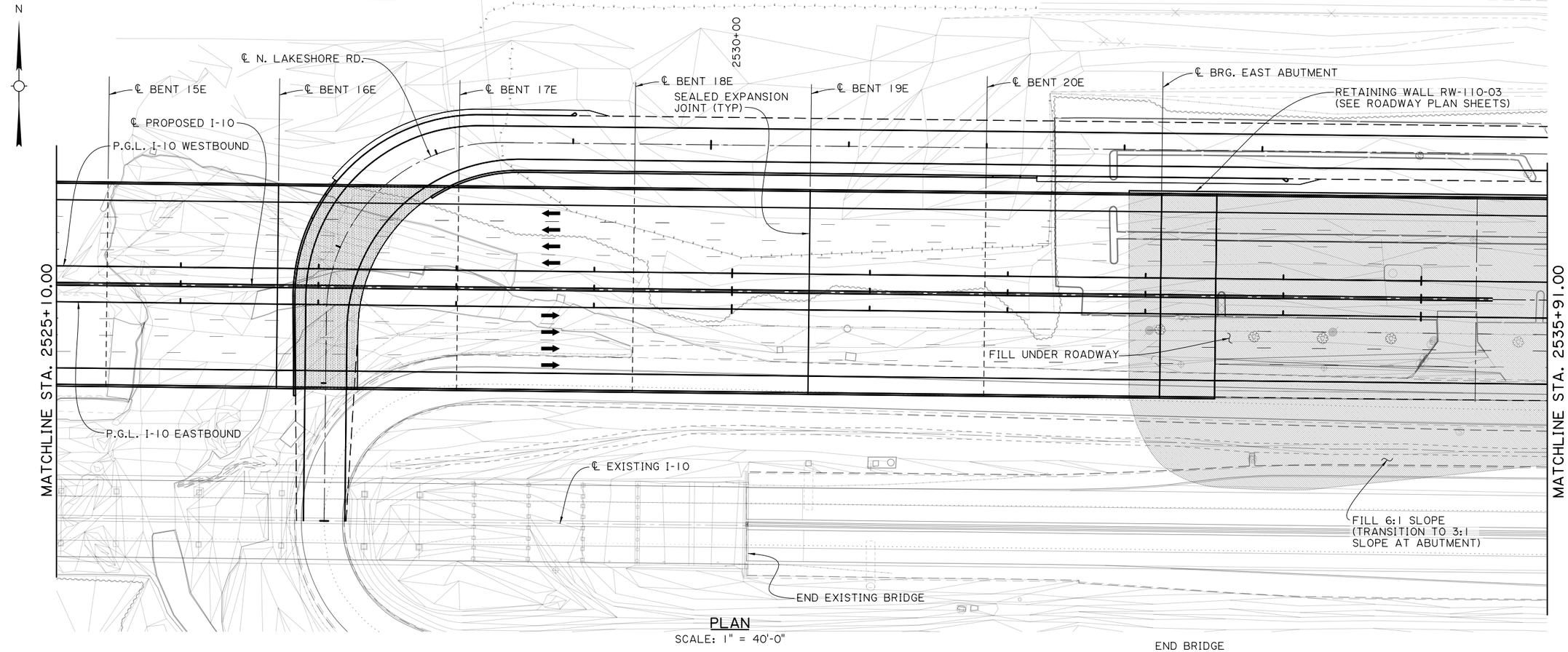

PLAN
SCALE: 1" = 40'-0"

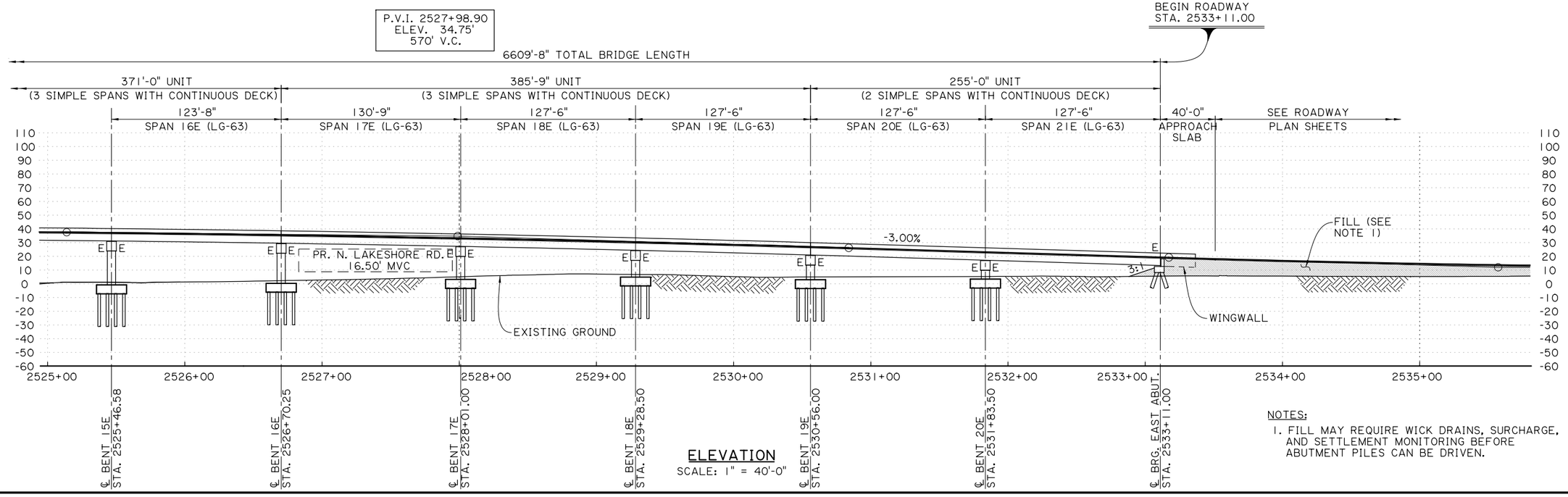

ELEVATION
SCALE: 1" = 40'-0"

NOTES:
1. FILL MAY REQUIRE WICK DRAINS, SURCHARGE, AND SETTLEMENT MONITORING BEFORE ABUTMENT PILES CAN BE DRIVEN.

SHEET NUMBER	173
PARISH	CALCASIEU
CONTROL SECTION	450-91
STATE PROJECT	H.003931

DESIGN	MAM
CHECK	HKO
DETAIL	PMR
CHECK	MAM
REVIEW	HKO
SERIES	3 OF 3

CONCEPTUAL
PRELIMINARY
NOT FOR CONSTRUCTION
ENGINEER: MOHAMMAD MAJD
LICENSE #: 46831
DATE: 5/25/2023

NO.	DATE	REVISION OR CHANGE ORDER DESCRIPTION	BY

STATE OF LOUISIANA DEPARTMENT OF TRANSPORTATION AND DEVELOPMENT

B-10 EAST APPROACH SPAN

GENERAL PLAN AND ELEVATION - 3

I-10 CALCASIEU RIVER BRIDGE IMPROVEMENTS

DOTD LOUISIANA DEPARTMENT OF TRANSPORTATION & DEVELOPMENT

CBP CALCASIEU BRIDGE PARTNERS

TECHNICAL PROPOSAL PLANS

P:\(CJL) 4580 I-10 Calcasieu Bridge Replacement\10 CADD\Struct_East Appr\Technical Proposal Plans East Approach\34 - B-10 East Approach Span - Bent Elevation and Footing Plan - 1.dgn 10:57:59 AM 3/11/2023

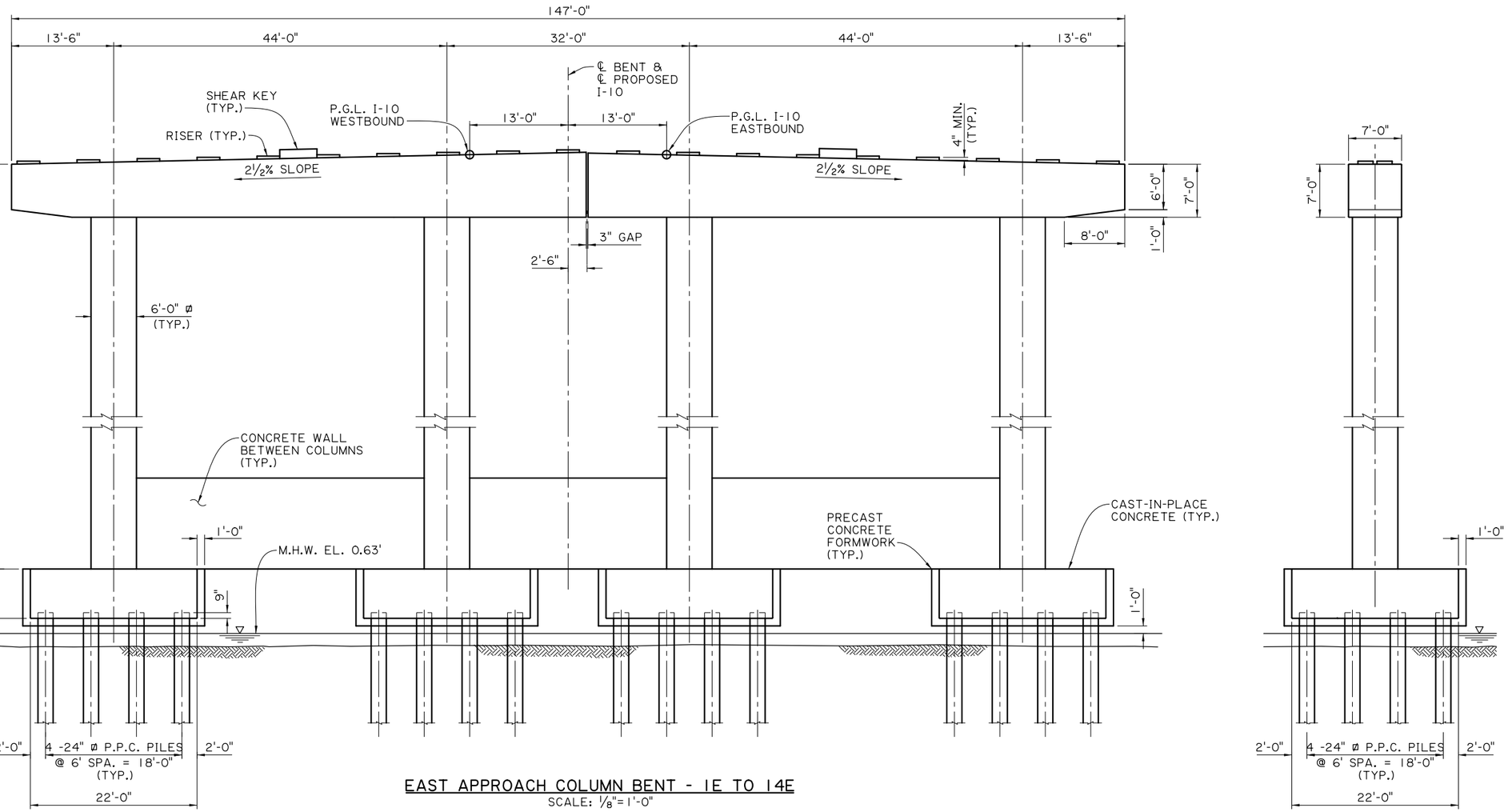

EAST APPROACH COLUMN BENT - 1E TO 14E
SCALE: 1/8"=1'-0"

SIDE VIEW
SCALE: 1/8"=1'-0"

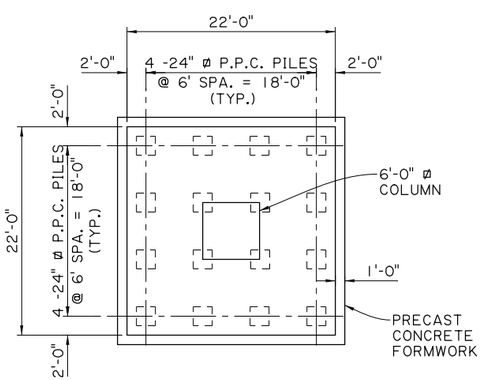

TYPICAL FOOTING PLAN
SCALE: 1/8"=1'-0"

COLUMN DIMENSIONS	
BENT	"H" (FT)
1E	66.1
2E	62.0
3E	58.9
4E	54.2
5E	49.3
6E	44.5
7E	39.7
8E	34.9
9E	30.1
10E	26.3
11E	25.8
12E	24.5
13E	23.2
14E	22.0

NOTE: THE COLUMN BENT DESIGN IS COMPLIANT WITH THE RFP TP REQUIREMENTS UP TO AND INCLUDING ADDENDUM NO. 8.

NOTES:

1. COLUMN BENT CAPS, COLUMNS, AND FOOTINGS ARE CLASS MASS A1 CONCRETE (F'C = 4.5 KSI). PRECAST FORMWORK IS CLASS A1 CONCRETE (F'C = 4.5 KSI).
2. FOR P.P.C. PILE DETAILS AND NOTES, SEE STANDARD PLAN BD.2.5.1.0.01.
3. THE COVER OF THE REINFORCING STEEL IN THE PRECAST CONCRETE FORMWORK SHALL BE 2".

SHEET NUMBER 174

PARISH	CONTROL SECTION	STATE PROJECT
CALCASIEU	450-91	H.003931

DESIGN	MAM
CHECK	HKO
DETAIL	PMR
CHECK	MAM
REVIEW	HKO
SERIES = 1 OF 2	

CONCEPTUAL
PRELIMINARY
NOT FOR CONSTRUCTION
ENGINEER:
MOHAMMAD MAJD
LICENSE #:
46831
DATE:
3/9/2023

NO.	DATE	REVISION OR CHANGE ORDER DESCRIPTION	BY

B-10 EAST APPROACH SPAN
BENT ELEVATION & FOOTING PLAN - 1
I-10 CALCASIEU RIVER BRIDGE IMPROVEMENTS

LOUISIANA DEPARTMENT OF TRANSPORTATION & DEVELOPMENT
CALCASIEU BRIDGE PARTNERS

TECHNICAL PROPOSAL PLANS
P:\(CJU) 4580 I-10 Calcasieu Bridge Replacement\10 CADD\Struct_East Appr\Technical Proposal Plans East Approach\35 - B-10 East Approach Span - Bent Elevation and Footing Plan - 2.dgn 3/11/2023 10:58:02 AM

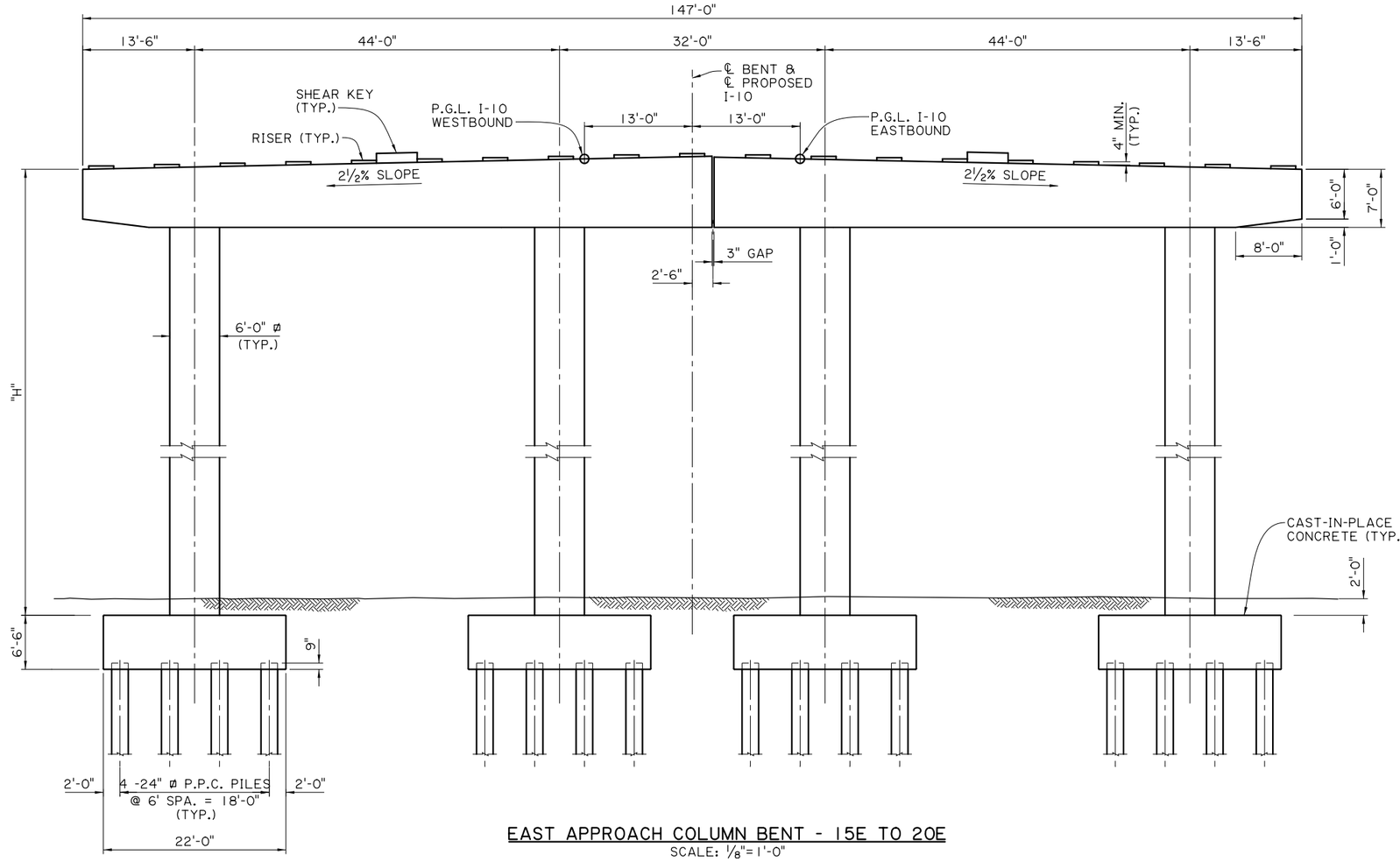

EAST APPROACH COLUMN BENT - 15E TO 20E
SCALE: 1/8"=1'-0"

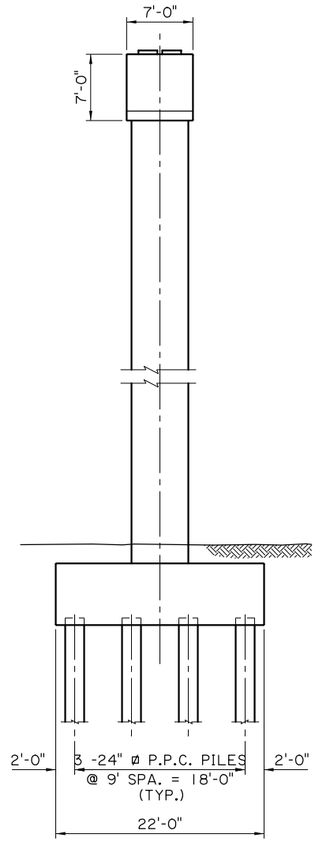

SIDE VIEW
SCALE: 1/8"=1'-0"

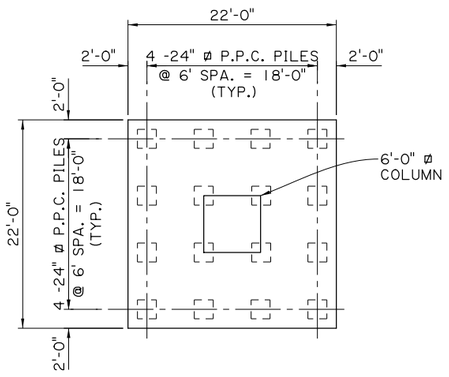

TYPICAL FOOTING PLAN
SCALE: 1/8"=1'-0"

COLUMN DIMENSIONS	
BENT	"H" (FT)
15E	31.7
16E	28.9
17E	23.8
18E	19.2
19E	17.7
20E	13.5

NOTES:

1. COLUMN BENT CAPS, COLUMNS, AND FOOTINGS ARE CLASS MASS A1 CONCRETE (F'C = 4.5 KSI).
2. FOR P.P.C. PILE DETAILS AND NOTES, SEE STANDARD PLAN BD.2.5.1.0.01.

SHEET NUMBER 175

PARISH	CONTROL SECTION	STATE PROJECT
CALCASIEU	450-91	H.003931

DESIGN	MAM	DETAIL	PMR	REVIEW	HKO	SERIES = 1 OF 2
CHECK	HKO	CHECK	MAM			

CONCEPTUAL
PRELIMINARY
NOT FOR CONSTRUCTION
ENGINEER:
MOHAMMAD MAJD
LICENSE #:
46831
DATE:
3/9/2023

NO.	DATE	REVISION OR CHANGE ORDER DESCRIPTION	BY

B-10 EAST APPROACH SPAN
BENT ELEVATION AND FOOTING PLAN - 2
I-10 CALCASIEU RIVER BRIDGE IMPROVEMENTS

DOTD LOUISIANA DEPARTMENT OF TRANSPORTATION & DEVELOPMENT
CBP CALCASIEU BRIDGE PARTNERS

TECHNICAL PROPOSAL PLANS
P:\(CJL) 4580 I-10 Calcasieu Bridge Replacement\10 CADD\Struct_East Appr\Technical Proposal Plans East Approach\36 - B-10 East Approach Span - East Abutment Details.dgn 5/11/2023 10:58:05 AM

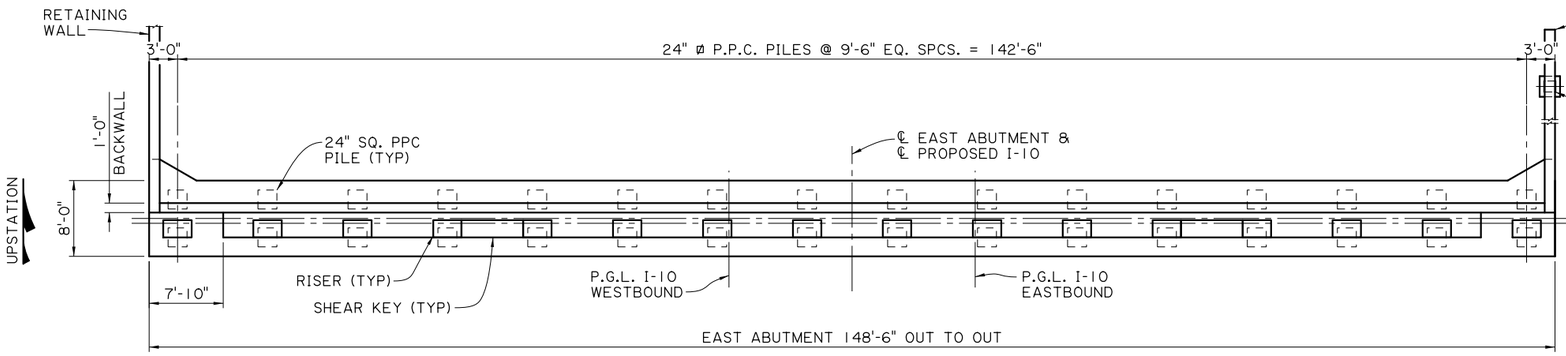

PLAN - EAST ABUTMENT
SCALE: 1/8"=1'-0"

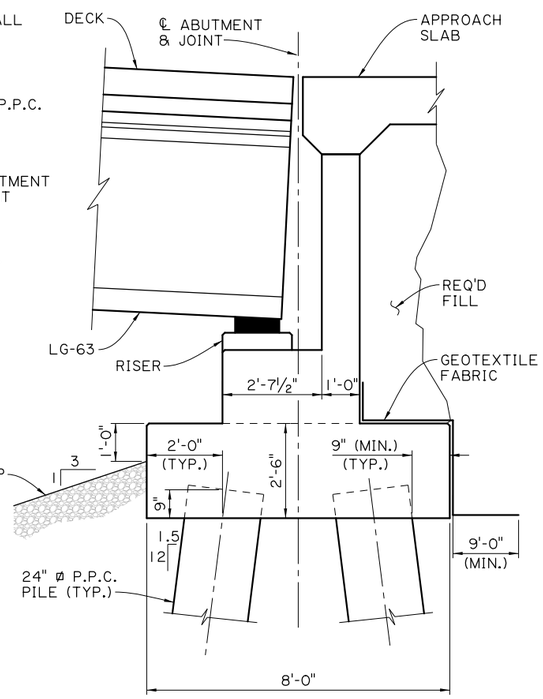

SECTION C-C
SCALE: 1/2"=1'-0"

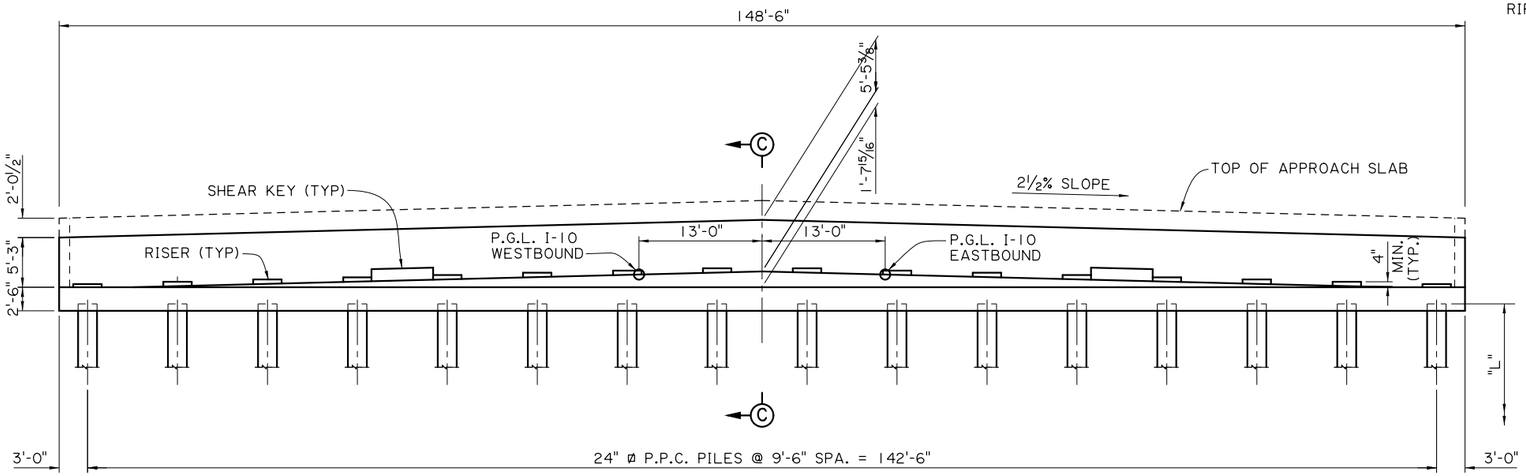

ELEVATION - EAST ABUTMENT
SCALE: 1/8"=1'-0"

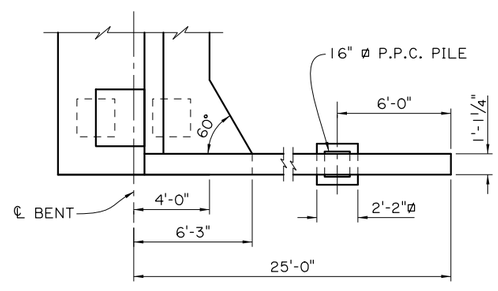

WINGWALL PART PLAN
SCALE: 1/4"=1'-0"

NOTES:

1. ABUTMENT CAP IS CLASS A1 CONCRETE (F'C = 4.5 KSI).
2. FOR P.P.C. PILE DETAILS AND NOTES, SEE STANDARD PLAN BD.2.5.1.0.01.
3. WINGWALL PILE CAP SHALL BE 2'-0" DEEP.
4. SEALED EXPANSION JOINT REQUIRED AT ABUTMENT JOINT BETWEEN BRIDGE DECK AND APPROACH SLAB. JOINT NOT DETAILED IN SECTION C-C. SEE LADOTD STANDARD PLANS BD.2.4.5.1.01 AND BD.2.4.5.1.02 FOR FURTHER INFORMATION.

SHEET NUMBER	176
PARISH	CALCASIEU
CONTROL SECTION	450-91
STATE PROJECT	H.003931
DESIGN	MAM
CHECK	HKO
DETAIL	PMR
CHECK	MAM
REVIEW	HKO
SERIES	1 OF 1

CONCEPTUAL
PRELIMINARY
NOT FOR CONSTRUCTION
ENGINEER:
MOHAMMAD MAJD
LICENSE #:
46831
DATE:
3/9/2023

NO.	DATE	REVISION OR CHANGE ORDER DESCRIPTION	BY

STATE OF LOUISIANA
DEPARTMENT OF TRANSPORTATION AND DEVELOPMENT

B-10 EAST APPROACH SPAN
EAST ABUTMENT

I-10 CALCASIEU RIVER BRIDGE IMPROVEMENTS

DOTD
LOUISIANA DEPARTMENT OF TRANSPORTATION & DEVELOPMENT

CBP
CALCASIEU BRIDGE PARTNERS

P:\(CJL) 4580 I-10 Calcasieu Bridge Replacement\10 CADD\Struct_East Appr\Technical Proposal Plans\1 Plans East Approach\37 - B-10 East Approach Span - Typical Sections.dgn 5/11/2023 10:58:08 AM

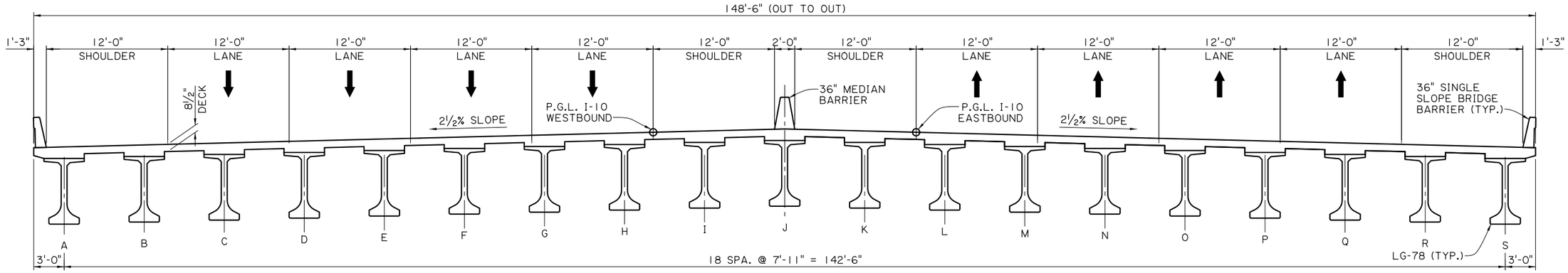

TYPICAL SECTION - EAST APPROACH SPANS 1E TO 10E

SCALE: 3/16" = 1'-0"

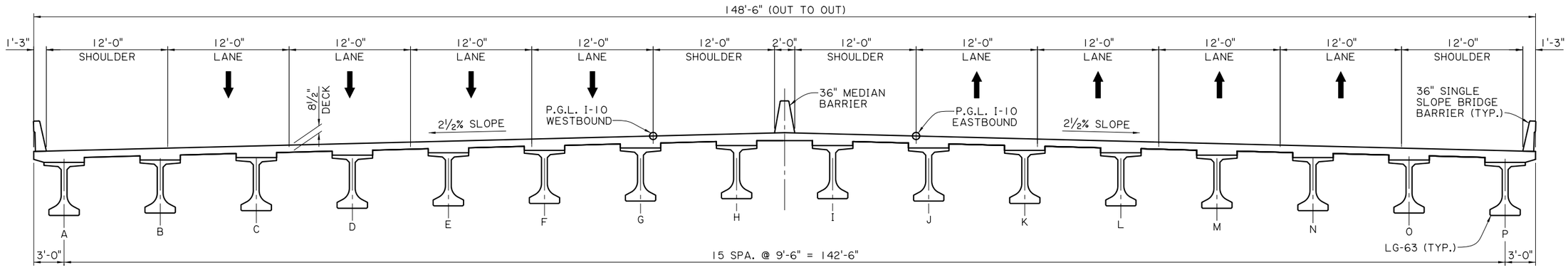

TYPICAL SECTION - EAST APPROACH SPANS 11E TO 16E, 18E TO 21E

SCALE: 3/16" = 1'-0"

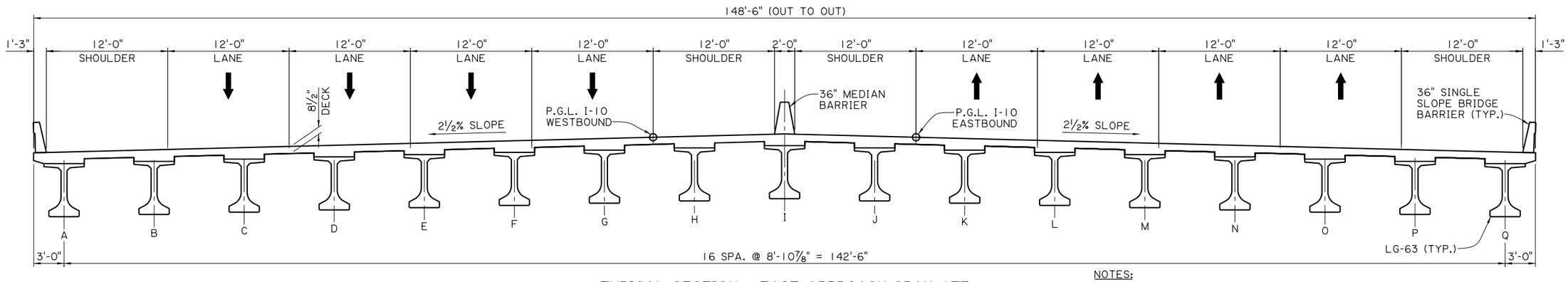

TYPICAL SECTION - EAST APPROACH SPAN 17E

SCALE: 3/16" = 1'-0"

NOTES:

1. LG-78 GIRDERS HAVE 74 STRANDS AND ARE CLASS P3 CONCRETE (F'C = 10 KSI). LG-63 GIRDERS HAVE 64 STRANDS AND ARE CLASS P3 CONCRETE (F'C = 10 KSI).
2. END DIAPHRAGMS SHALL BE PROVIDED AT EACH SPAN. DIAPHRAGMS ARE 8" THICK AND EXTEND FULL DEPTH FROM THE BOTTOM OF DECK TO TOP OF GIRDER'S BOTTOM FLANGE.
3. WIDTH OF DECK MAY REQUIRE USE OF A LONGITUDINAL CONSTRUCTION JOINT IN THE CAST-IN-PLACE CONCRETE TO CONTROL SHRINKAGE CRACKING.

SHEET NUMBER 177

PARISH	CONTROL SECTION	STATE PROJECT
CALCASIEU	450-91	H.003931

DESIGN	MAM	DETAIL	PMR	REVIEW	HKO
CHECK	HKO	CHECK	MAM	SERIES	1 OF 1

CONCEPTUAL
PRELIMINARY
NOT FOR CONSTRUCTION
ENGINEER:
MOHAMMAD MAJD
LICENSE #:
46831
DATE:
3/9/2023

NO.	DATE	REVISION OR CHANGE ORDER DESCRIPTION	BY

B-10 EAST APPROACH SPAN

TYPICAL SECTIONS

I-10 CALCASIEU RIVER BRIDGE IMPROVEMENTS

DOTD LOUISIANA DEPARTMENT OF TRANSPORTATION & DEVELOPMENT

CBP CALCASIEU BRIDGE PARTNERS

P:\(CJU) 4580 I-10 Calcasieu Bridge Replacement\10 CADD\Struct_East Appr\Technical Proposal Plans East Approach\38 - B-10 East Approach Span -Deck Drainage Details.dgn 5/11/2023 10:58:11 AM

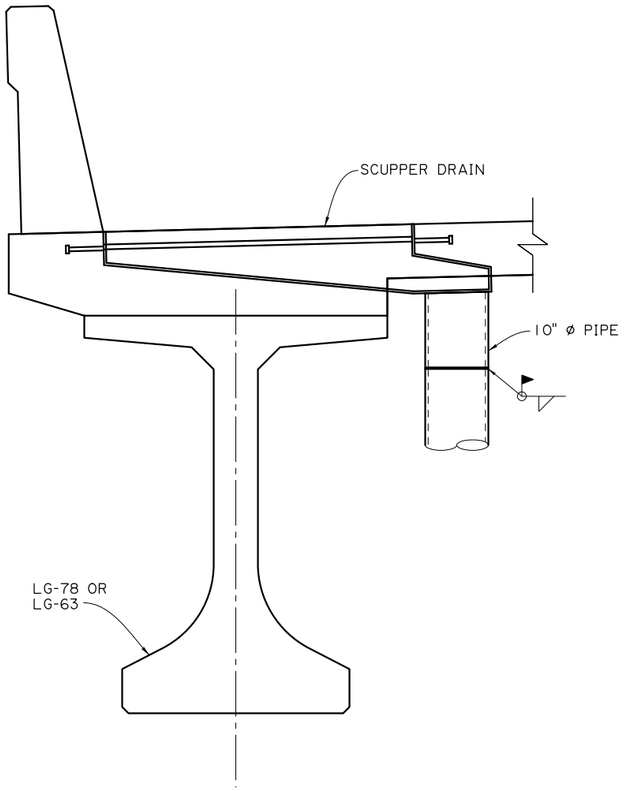

SCUPPER DETAIL
SCALE: 1"=1'-0"

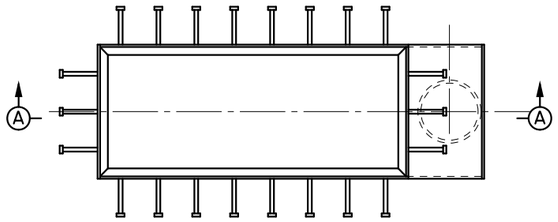

SCUPPER PLAN
SCALE: 1"=1'-0"

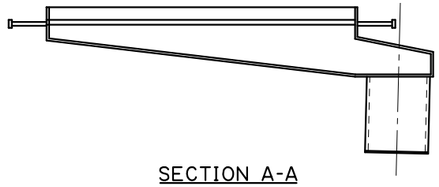

SECTION A-A
SCALE: 1"=1'-0"

SCUPPER DRAIN STATIONS		
STATION (SCUPPER CENTERLINE)	STRUCTURE NO.	
	EASTBOUND	WESTBOUND
2496+97.00	850	800
2498+85.00	852	802
2501+15.00	854	804
2503+03.00	856	806
2504+67.75	858	808
2506+28.00	860	810
2507+88.25	862	812
2509+48.50	864	814
2511+08.75	866	816
2512+69.00	868	818
2514+29.25	870	820
2515+89.50	872	822
2517+49.75	874	824
2519+10.00	876	826
2520+37.75	878	828
2521+65.50	880	830
2522+93.25	882	832
2524+16.92	884	834
2525+40.58	886	836
2526+64.25	888	838
2527+95.00	890	840
2529+22.50	892	842
2530+50.00	894	844
2531+77.50	896	846
2533+05.00	898	848

NOTES:
1. PIPING SYSTEM FROM SCUPPERS WILL DISCHARGE FROM SUBSTRUCTURE UNITS AT GROUND OR WATER LEVEL.
2. SCUPPER GRATING NOT SHOWN AND TO BE DETERMINED IN FINAL DESIGN TOGETHER WITH OTHER DETAILS.

SHEET NUMBER 178

PARISH	CONTROL SECTION	STATE PROJECT
CALCASIEU	450-91	H.003931

DESIGN	CHECK	DETAIL	CHECK	REVIEW	SERIES = 1 OF 1
NHS	HKO	PMR	MAM	HKO	

CONCEPTUAL
PRELIMINARY
NOT FOR CONSTRUCTION
ENGINEER:
MOHAMMAD MAJD
LICENSE #:
46831
DATE:
3/9/2023

NO.	DATE	REVISION OR CHANGE ORDER DESCRIPTION	BY

B-10 EAST APPROACH SPAN
DECK DRAINAGE DETAILS

I-10 CALCASIEU RIVER BRIDGE IMPROVEMENTS

LOUISIANA DEPARTMENT OF TRANSPORTATION & DEVELOPMENT

CALCASIEU BRIDGE PARTNERS

TECHNICAL PROPOSAL PLANS
Z:\Shared\1370 - I-10 Calcasieu P3\DWGS\BRIDGE\B11 - Sampson St to EB I10 ramp R11 over UPRR Spur\B11 - 01-03.dgn
5/25/2023 2:50:58 PM

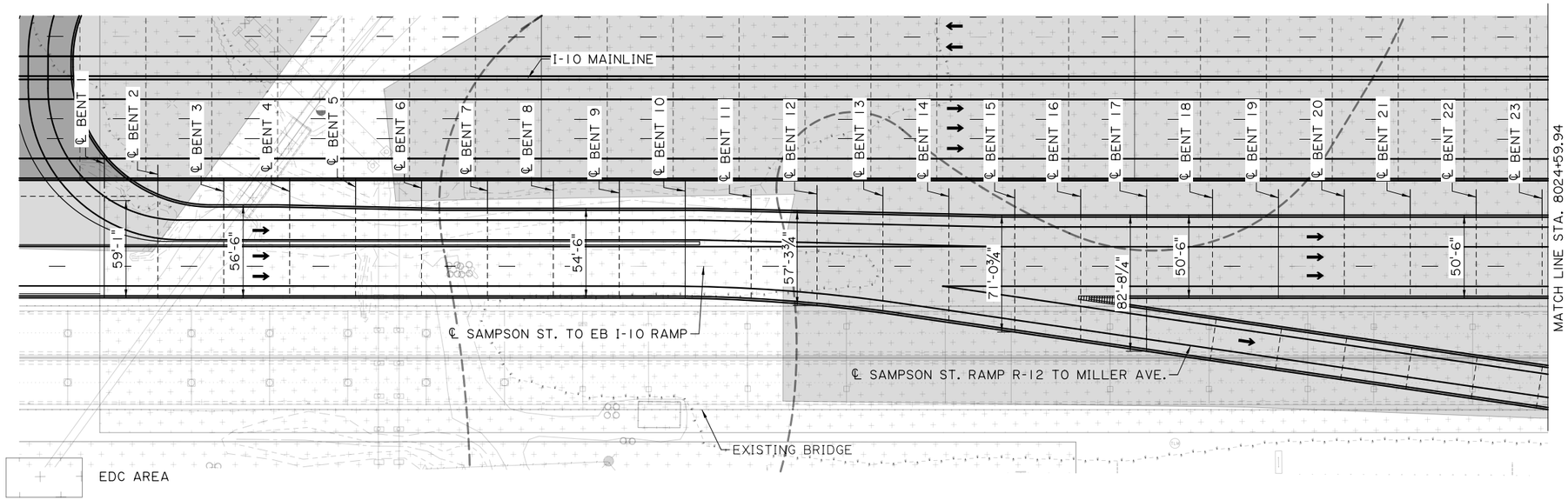

300' VERTICAL CURVE
P.V.I. 8015+31.24
ELEV. 43.86
G_1 = -2.50%
G_2 = -0.06%

GENERAL PLAN
SCALE: 1" = 40'

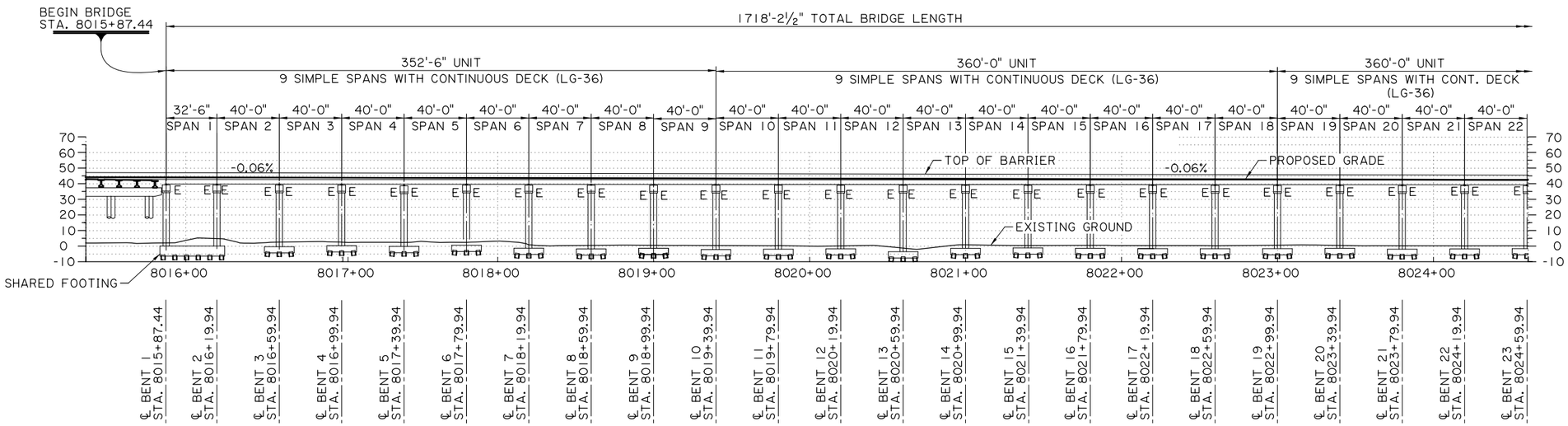

NOTE:
BENT 1 AND BENT 2 SHARE FOOTING WITH STRUCTURE B-5
BENT 13 FOOTING.
DETAILS FOR THE SHARED FOOTING ARE PROVIDED WITH B-5 SET.

ELEVATION
SCALE: 1" = 40'

SHEET NUMBER 179

PARISH	CONTROL SECTION	STATE PROJECT
CALCASIEU	450-91	H.003931

DESIGN	CHECK	DETAIL	CHECK	REVIEW	SERIES
JJB	CML	KNP	JJB		1 OF 2

TECHNICAL PROPOSAL PLANS
PRELIMINARY
NOT FOR CONSTRUCTION
ENGINEER:
ROBERT M. GRAY
LICENSE #: 45611
DATE: 5/25/23

NO.	DATE	REVISION OR CHANGE ORDER DESCRIPTION	BY

B-11 SAMPSON ST. TO EB I-10
RAMP R-11 OVER UPRR SPUR
GENERAL PLAN AND ELEVATION

I-10 CALCASIEU RIVER BRIDGE IMPROVEMENTS

DOTD LOUISIANA DEPARTMENT OF TRANSPORTATION & DEVELOPMENT
CBP CALCASIEU BRIDGE PARTNERS

TECHNICAL PROPOSAL PLANS
5/25/2023 2:51:00 PM
Z:\Shared\1370 - I-10 Calcasieu P3\DWGS\BRIDGE\B11 - Sampson St to EB I10 ramp R11 over UPRR Spur\B11 - 01-03.dgn

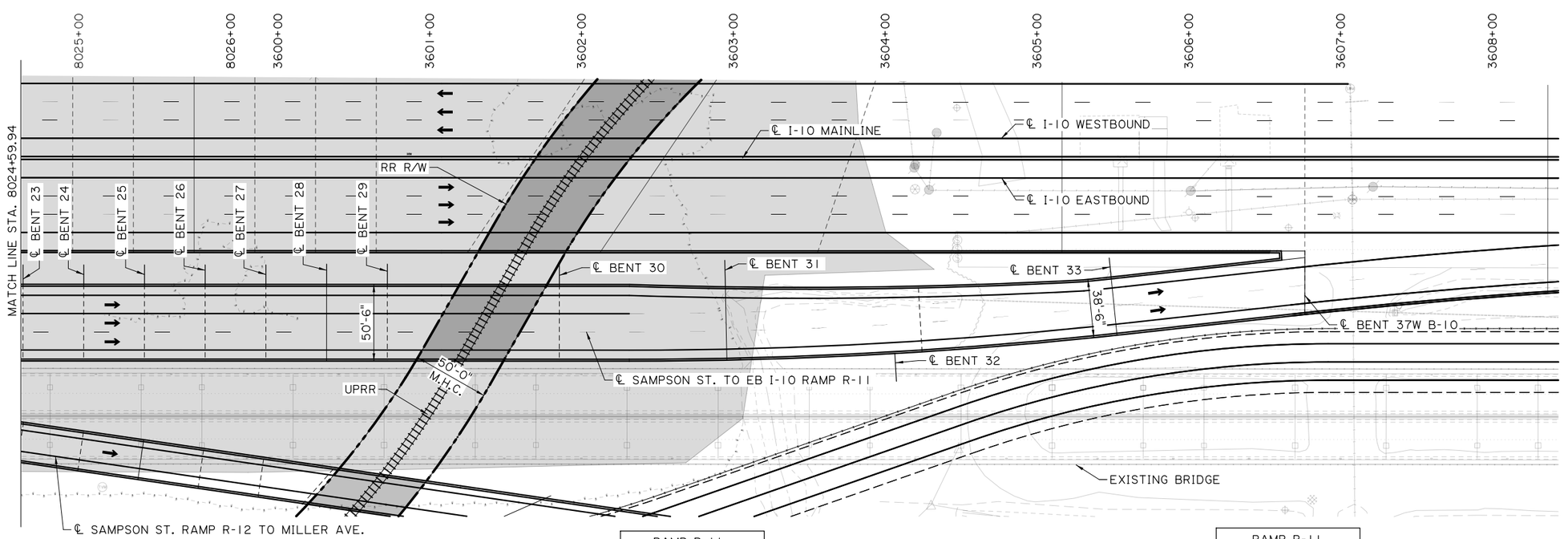

RAMP R-11
HORIZ. CURVE DATA
P.I. STA. 3603+95.64
△ = 6°18'129" LT.
T = 164.65'
L = 328.97'
R = 2988'

GENERAL PLAN
SCALE: 1" = 40'

RAMP R-11
HORIZ. CURVE DATA
P.I. STA. 3608+81.50
△ = 6°18'27" RT.
T = 214.67'
L = 428.91'
R = 3896'

STATION EQUATION
P.V.I. 3600+00.00
ELEV. 43.23
P.V.I. 8026+28.31
ELEV. 43.24

200' VERTICAL CURVE
P.V.I. 3605+27.85
ELEV. 50.57
G_1 = 1.39%
G_2 = 2.97%

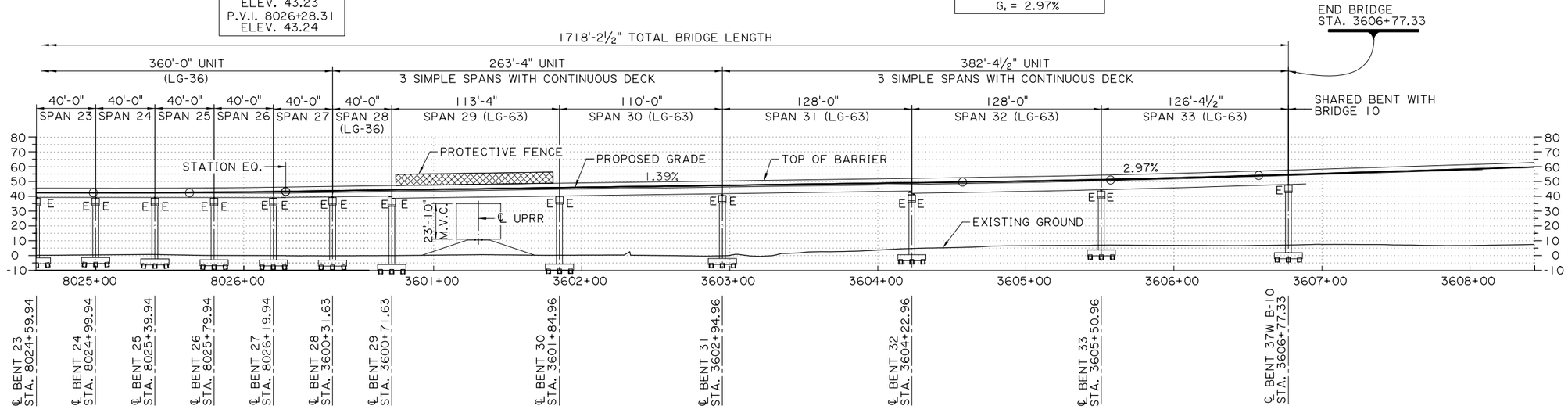

ELEVATION
SCALE: 1" = 40'

SHEET NUMBER 180

PARISH	CONTROL SECTION	STATE PROJECT
CALCASIEU	450-91	H.003931

DESIGN	CHECK	DETAIL	CHECK	REVIEW	SERIES
JJB	CML	KNP	JJB		2 OF 2

TECHNICAL PROPOSAL PLANS
PRELIMINARY
NOT FOR CONSTRUCTION
ENGINEER:
ROBERT M. GRAY
LICENSE #: 45611
DATE: 5/25/23

NO.	DATE	REVISION OR CHANGE ORDER DESCRIPTION	BY

B-11 SAMPSON ST. TO EB I-10
RAMP R-11 OVER UPRR SPUR
GENERAL PLAN AND ELEVATION

I-10 CALCASIEU RIVER BRIDGE IMPROVEMENTS

DOTD LOUISIANA DEPARTMENT OF TRANSPORTATION & DEVELOPMENT

CBP CALCASIEU BRIDGE PARTNERS

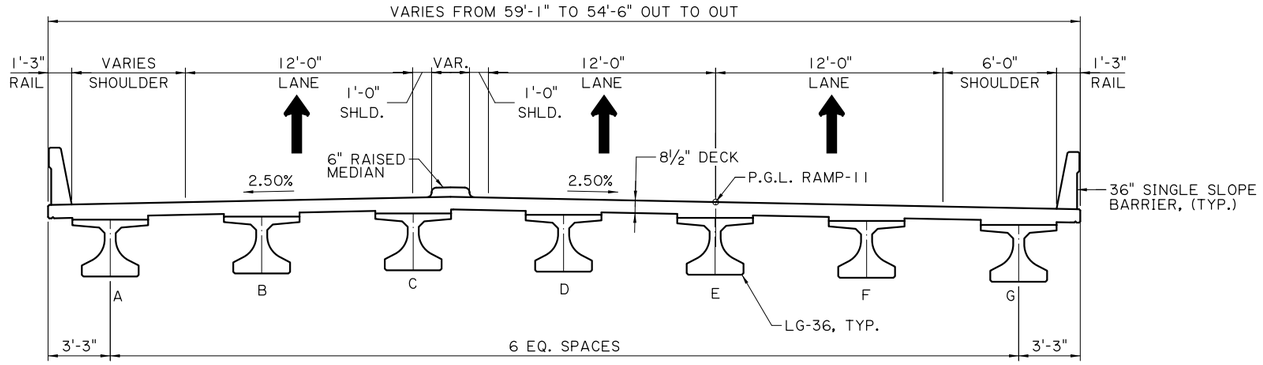

TYPICAL SECTION
SPANS 1 THRU 8
SCALE: 1/4" = 1'-0"

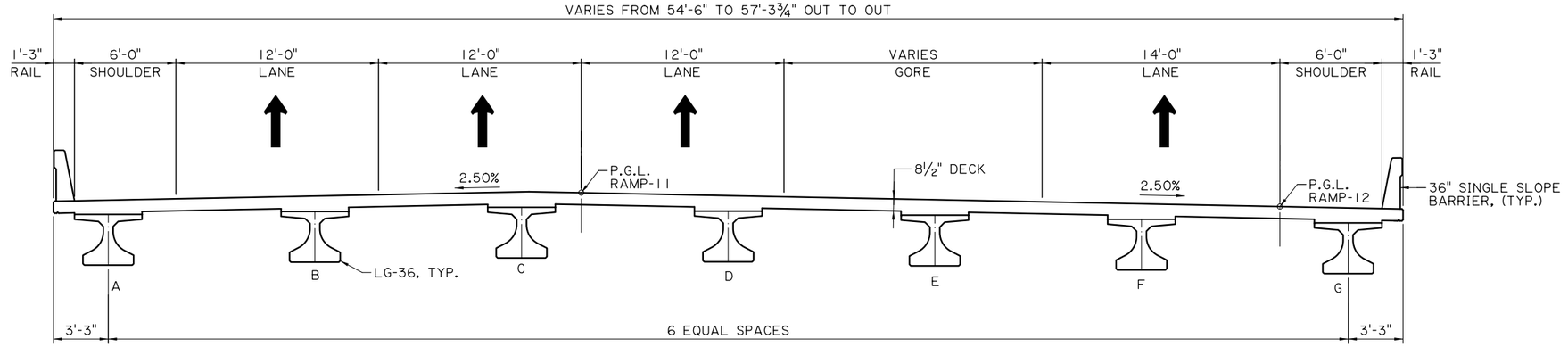

TYPICAL SECTION
SPANS 9 THRU 11
SCALE: 1/4" = 1'-0"

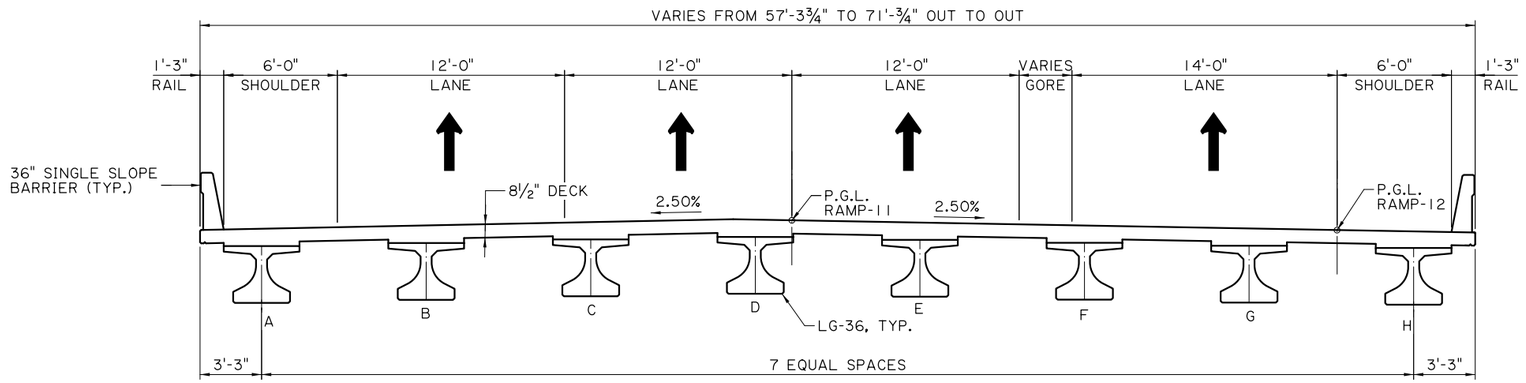

TYPICAL SECTION
SPANS 12 THRU 14
SCALE: 1/4" = 1'-0"

TECHNICAL PROPOSAL PLANS

5/25/2023 2:51:00 PM

Z:\Shared\1370 - I-10 Calcasieu P3\DWGS\BRIDGE\B11 - Sampson St to EB I10 ramp R11 over UPRR Spur\B11 - 01-03.dgn

SHEET NUMBER	181

PARISH	CONTROL SECTION	STATE PROJECT
CALCASIEU	450-91	H.003931

DESIGN	CHECK	DETAIL	CHECK	REVIEW	SERIES # 1 OF 3
JJB	CML	KNP	JJB		

TECHNICAL PROPOSAL PLANS

PRELIMINARY
NOT FOR CONSTRUCTION
ENGINEER:
ROBERT M. GRAY
LICENSE #:
45611
DATE:
5/25/23

NO.	DATE	REVISION OR CHANGE ORDER DESCRIPTION	BY

B-11 SAMPSON ST. TO EB I-10
RAMP R-11 OVER UPRR SPUR
TYPICAL SECTIONS

I-10 CALCASIEU RIVER BRIDGE IMPROVEMENTS

DOTD LOUISIANA DEPARTMENT OF TRANSPORTATION & DEVELOPMENT

CBP CALCASIEU BRIDGE PARTNERS

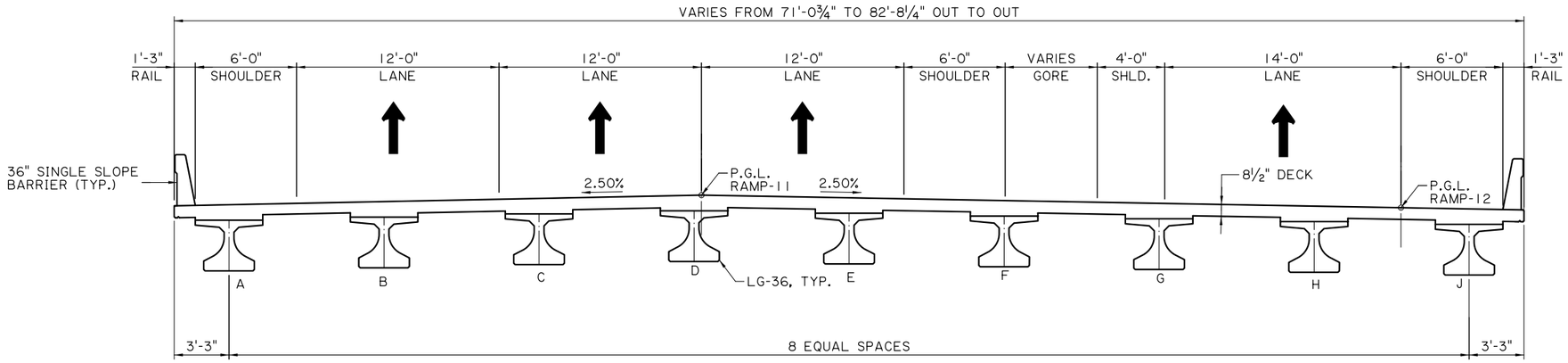

TYPICAL SECTION
SPANS 15 AND 16
SCALE: ¼" = 1'-0"

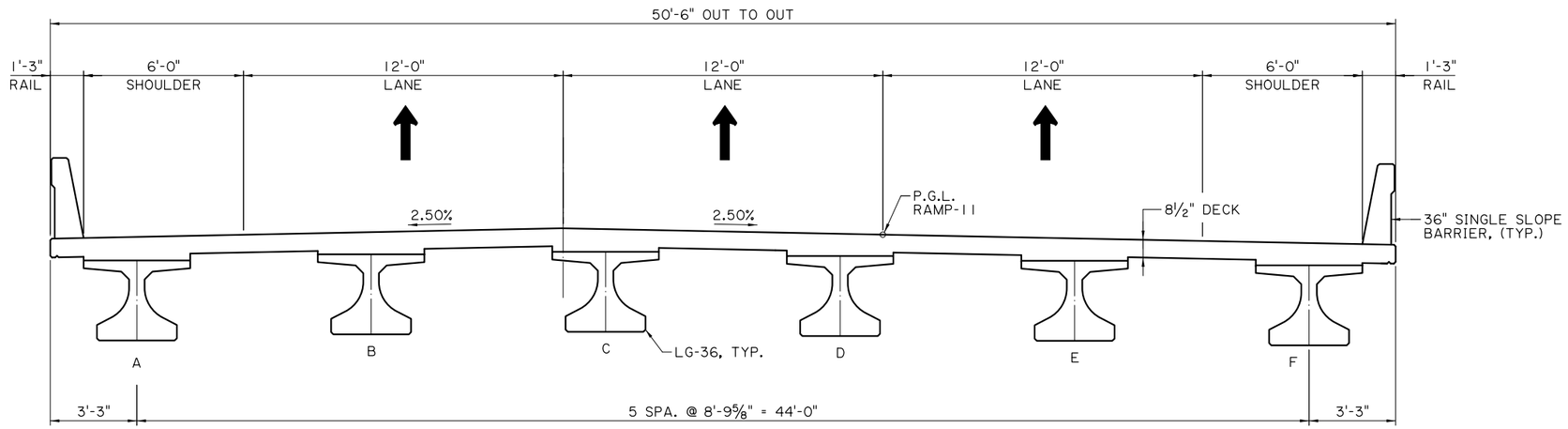

TYPICAL SECTION
SPANS 17 THRU 28
SCALE: ¼" = 1'-0"

TECHNICAL PROPOSAL PLANS

5/25/2023 2:51:01 PM

Z:\Shared\1370 - I-10 Calcasieu P3\DWGS\BRIDGE\B11 - Sampson St to EB I10 ramp R11 over UPRR Spur\B11 - 01-03.dgn

SHEET NUMBER 182

PARISH	CONTROL SECTION	STATE PROJECT
CALCASIEU	450-91	H.003931

DESIGN	CHECK	DETAIL	CHECK	REVIEW	SERIES
JJB	CML	KNP	JJB		2 OF 3

TECHNICAL PROPOSAL PLANS
PRELIMINARY
NOT FOR CONSTRUCTION
ENGINEER:
ROBERT M. GRAY
LICENSE #:
45611
DATE:
5/25/23

NO.	DATE	REVISION OR CHANGE ORDER DESCRIPTION	BY

B-11 SAMPSON ST. TO EB I-10
RAMP R-11 OVER UPRR SPUR
TYPICAL SECTIONS

I-10 CALCASIEU RIVER BRIDGE IMPROVEMENTS

DOTD LOUISIANA DEPARTMENT OF TRANSPORTATION & DEVELOPMENT

CBP CALCASIEU BRIDGE PARTNERS

TECHNICAL PROPOSAL PLANS
Z:\Shared\1370 - I-10 Calcasieu P3\DWGS\BRIDGE\B11 - Sampson St to EB I10 ramp R11 over UPRR Spur\B11 - 01-03.dgn
5/25/2023 2:51:01 PM

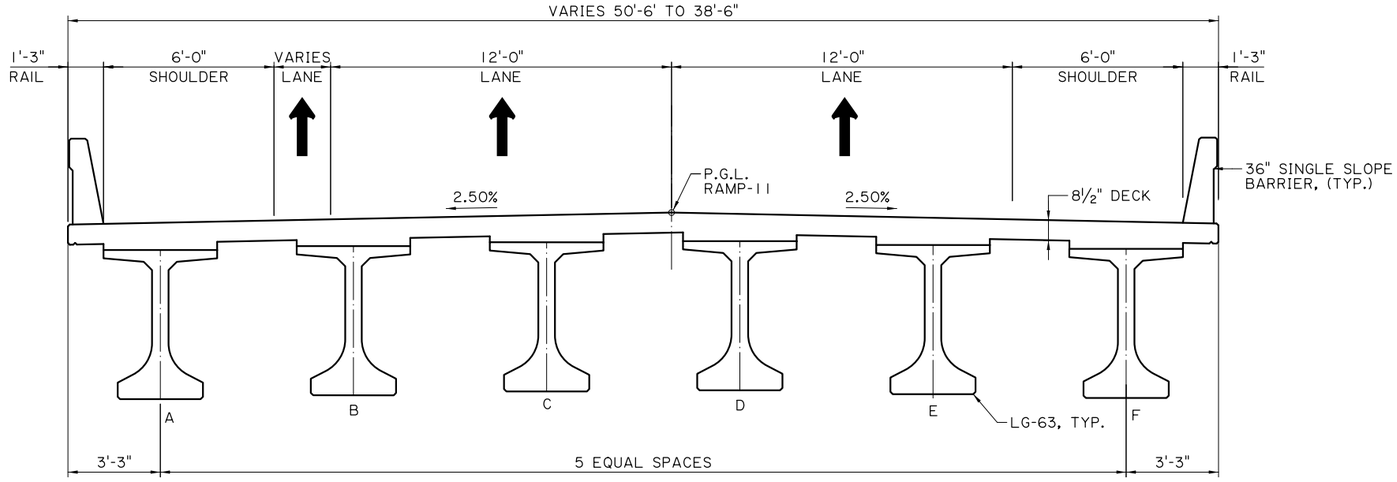

TYPICAL SECTION
SPANS 29 THRU 32
SCALE: ¼" = 1'-0"

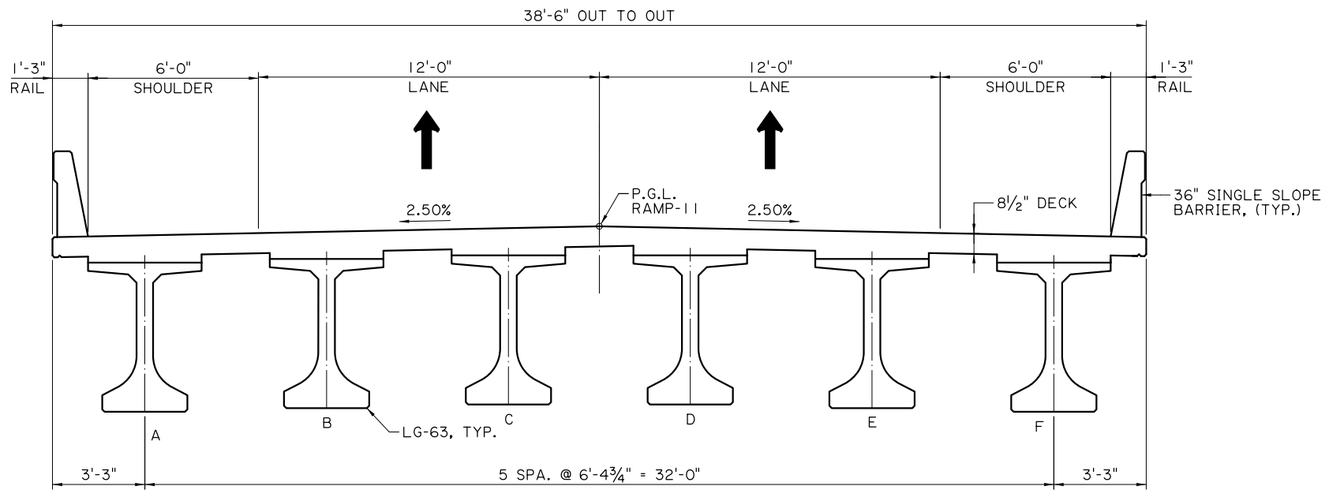

TYPICAL SECTION
SPAN 33
SCALE: ¼" = 1'-0"

SHEET NUMBER 183

PARISH	CONTROL SECTION	STATE PROJECT
CALCASIEU	450-91	H.003931

DESIGN	CHECK	DETAIL	CHECK	REVIEW	SERIES
JJB	CML	KNP	JJB		3 OF 3

TECHNICAL PROPOSAL PLANS
PRELIMINARY
NOT FOR CONSTRUCTION
ENGINEER:
ROBERT M. GRAY
LICENSE #:
45611
DATE:
5/25/23

NO.	DATE	REVISION OR CHANGE ORDER DESCRIPTION	BY

B-11 SAMPSON ST. TO EB I-10
RAMP R-11 OVER UPRR SPUR
TYPICAL SECTIONS

I-10 CALCASIEU RIVER BRIDGE IMPROVEMENTS

DOTD LOUISIANA DEPARTMENT OF TRANSPORTATION & DEVELOPMENT
CBP CALCASIEU BRIDGE PARTNERS

TECHNICAL PROPOSAL PLANS

Z:\Shared\1370 - I-10 Calcasieu P3\DWGS\BRIDGE\B11 - Sampson St to EB I10 ramp R11 over UPRR Spur\B11 - 01-03.dgn 5/25/2023 2:51:01 PM

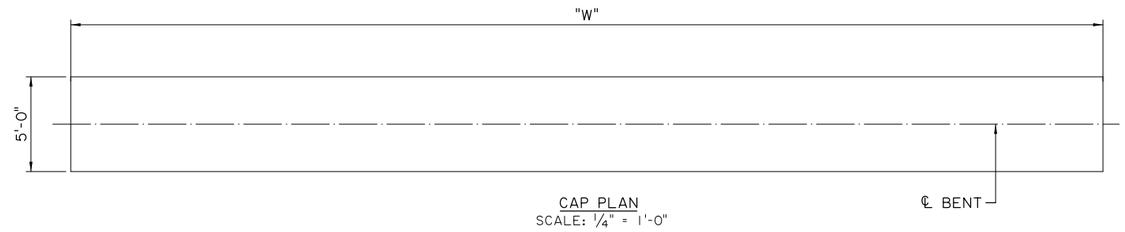

CAP PLAN
SCALE: 1/4" = 1'-0"

BENT DIMENSION			
BENT NO.	"H"	"W"	"S"
1	40'-4"	54'-6"	32'-6"
2	37'-4"	54'-6"	32'-6"
3	39'-6"	54'-6"	32'-6"
4	38'-10"	54'-6"	32'-6"
5	38'-10"	54'-6"	32'-6"
6	38'-7"	54'-6"	32'-6"
7	40'-5"	54'-6"	32'-6"
8	40'-10"	54'-6"	32'-6"
9	40'-5"	54'-6"	32'-6"
10	41'-3"	54'-6"	32'-6"
11	41'-0"	55'-4"	33'-4"
12	40'-8"	57'-6"	35'-6"
13	42'-6"	61'-4"	39'-4"

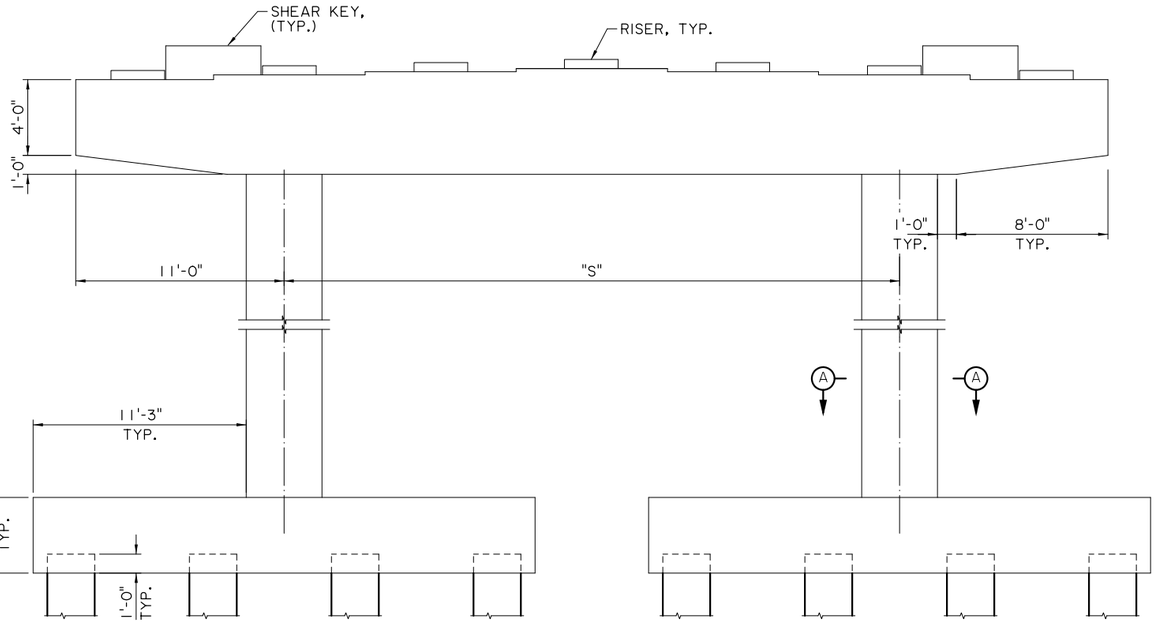

ELEVATION
SCALE: 1/4" = 1'-0"

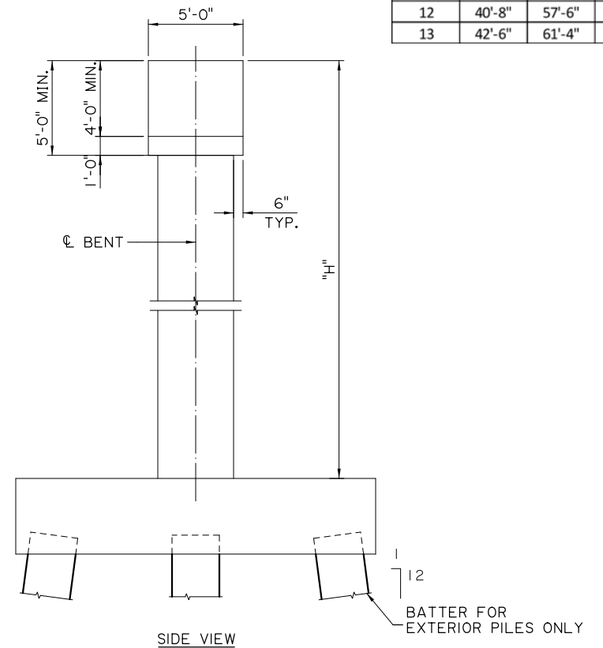

SIDE VIEW
SCALE: 1/4" = 1'-0"

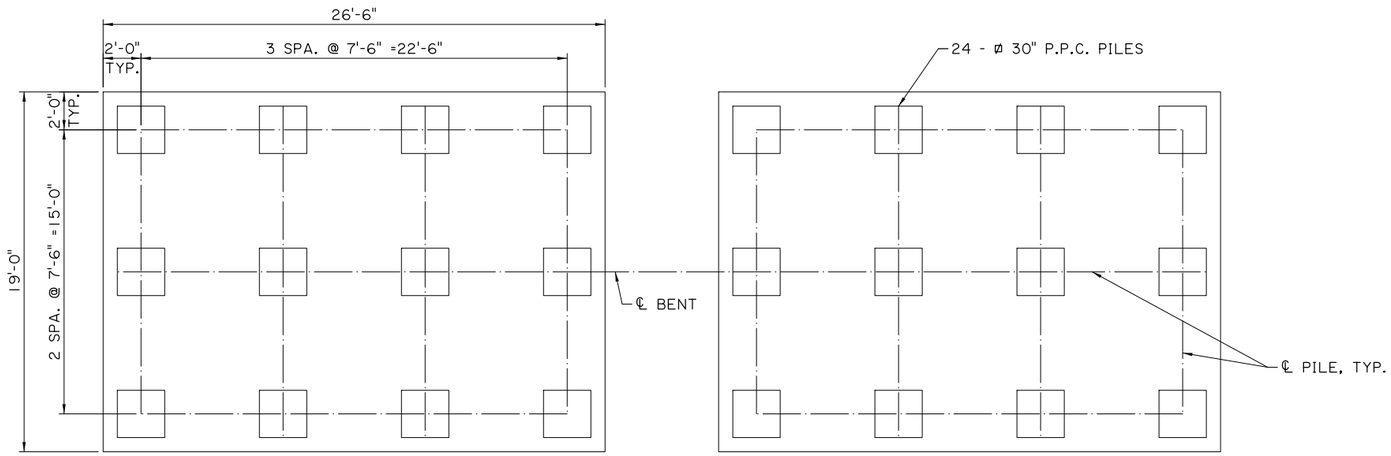

FOOTING PLAN
SCALE: 1/4" = 1'-0"

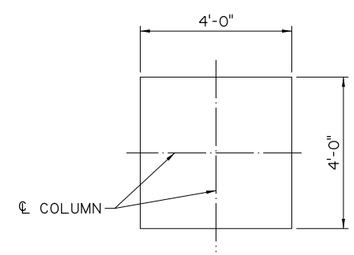

SECTION A-A
SCALE: 1/2" = 1'-0"

NOTE: BENT 1 AND BENT 2 SHARE FOOTING WITH STRUCTURE B-5 BENT 13 FOOTING. DETAILS FOR SHARED FOOTING ARE PROVIDED WITH B-5 SET.

SHEET NUMBER 184

PARISH	CONTROL SECTION	STATE PROJECT
CALCASIEU	450-91	H.003931

DESIGN	CHECK	DETAIL	CHECK	REVIEW	SERIES #
JJB	CML	KNP	JJB		1 OF 5

TECHNICAL PROPOSAL PLANS
PRELIMINARY
NOT FOR CONSTRUCTION
ENGINEER: ROBERT M. GRAY
LICENSE #: 45611
DATE: 5/25/23

NO.	DATE	REVISION OR CHANGE ORDER DESCRIPTION	BY

STATE OF LOUISIANA — DEPARTMENT OF TRANSPORTATION AND DEVELOPMENT

B-11 SAMPSON ST. TO EB I-10 RAMP R-11 OVER UPRR SPUR

BENT DETAILS

I-10 CALCASIEU RIVER BRIDGE IMPROVEMENTS

DOTD LOUISIANA DEPARTMENT OF TRANSPORTATION & DEVELOPMENT

CBP CALCASIEU BRIDGE PARTNERS

BENT DIMENSION			
BENT NO.	"H"	"W"	"S"
14	42'-4"	66'-3"	22'-1.5"
15	42'-1"	71'-6"	24'-9"
16	42'-3"	76'-10"	27'-5"
17	42'-5"	82'-8"	30'-4"

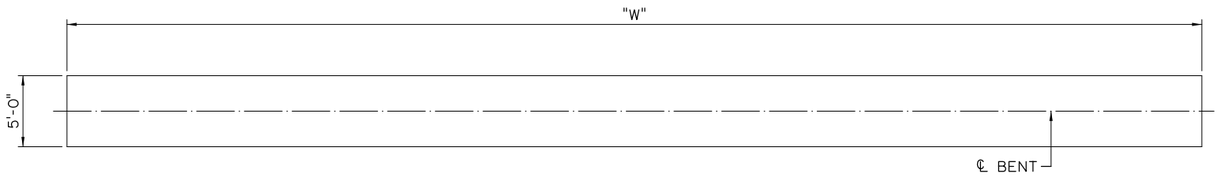

CAP PLAN
SCALE: 3/16" = 1'-0"

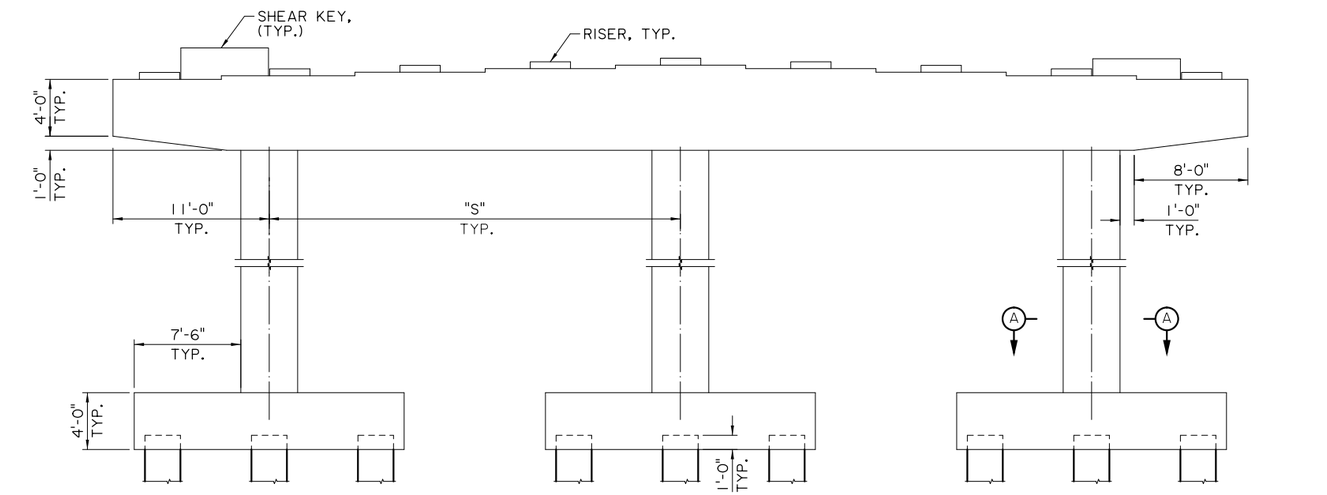

ELEVATION
SCALE: 1/4" = 1'-0"

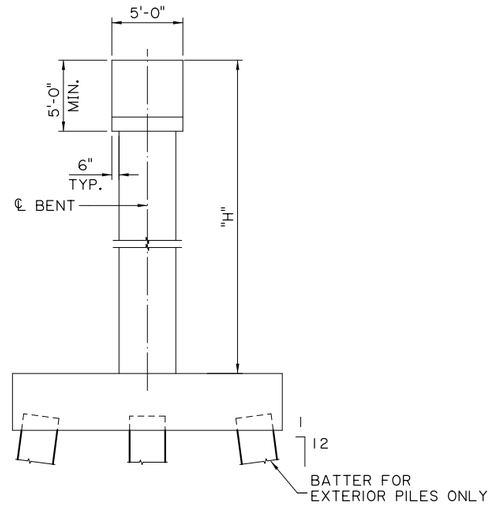

SIDE VIEW
SCALE: 1/4" = 1'-0"

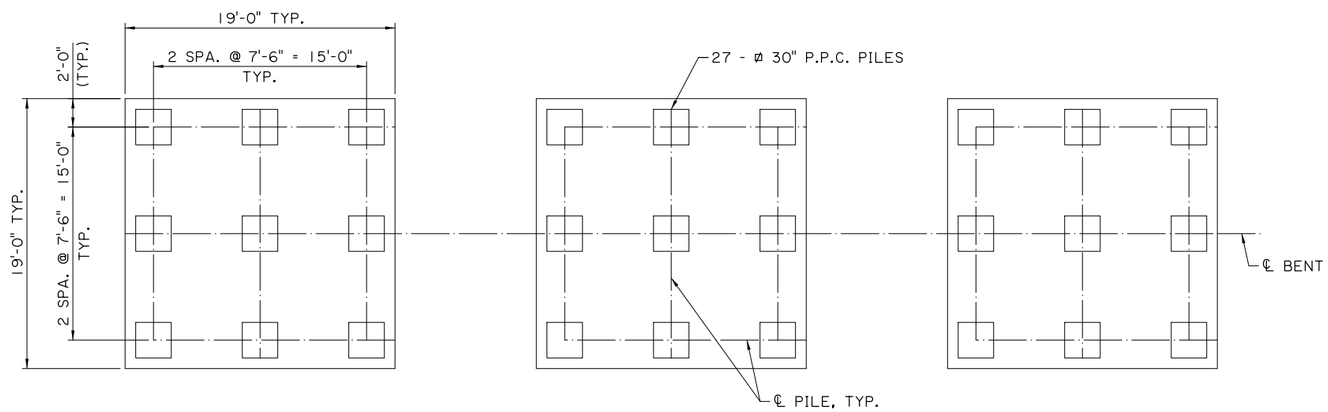

FOOTING PLAN
SCALE: 1/4" = 1'-0"

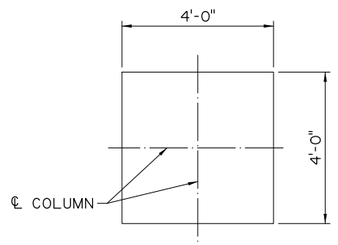

SECTION A-A
SCALE: 1/2" = 1'-0"

SHEET NUMBER 185

PARISH	CONTROL SECTION	STATE PROJECT
CALCASIEU	450-91	H.003931

DESIGN	CHECK	DETAIL	CHECK	REVIEW	SERIES #
JJB	CML	KNP	JJB		2 OF 5

TECHNICAL PROPOSAL PLANS
PRELIMINARY
NOT FOR CONSTRUCTION
ENGINEER: ROBERT M. GRAY
LICENSE #: 45611
DATE: 5/25/23

NO.	DATE	REVISION OR CHANGE ORDER DESCRIPTION	BY

B-11 SAMPSON ST. TO EB I-10 RAMP R-11 OVER UPRR SPUR

BENTS DETAILS

I-10 CALCASIEU RIVER BRIDGE IMPROVEMENTS

LOUISIANA DEPARTMENT OF TRANSPORTATION & DEVELOPMENT

CALCASIEU BRIDGE PARTNERS

TECHNICAL PROPOSAL PLANS

5/25/2023 2:51:02 PM

Z:\Shared\1370 - I-10 Calcasieu P3\DWGS\BRIDGE\B11 - Sampson St to EB I10 ramp R11 over UPRR Spur\B11 - 01-03.dgn

TECHNICAL PROPOSAL PLANS
5/25/2023 2:51:02 PM
Z:\Shared\1370 - I-10 Calcasieu P3\DWGS\BRIDGE\B11 - Sampson St to EB I10 ramp R11 over UPRR Spur\B11 - 01-03.dgn

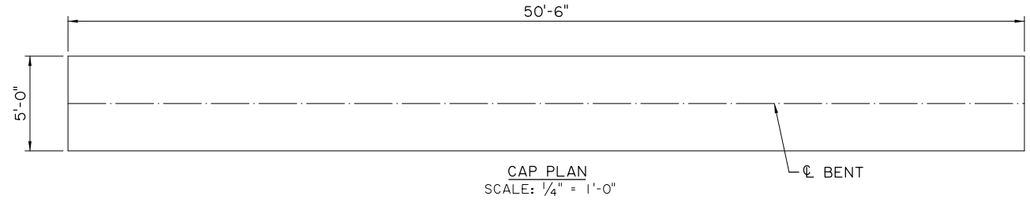

CAP PLAN
SCALE: 1/4" = 1'-0"

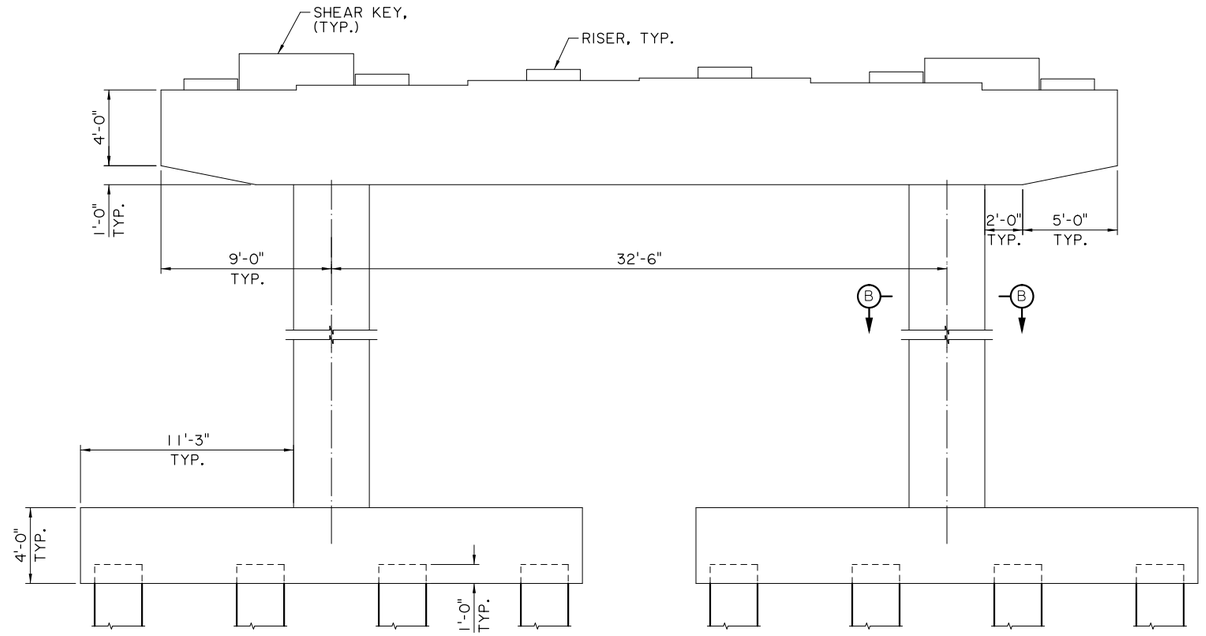

ELEVATION
SCALE: 1/4" = 1'-0"

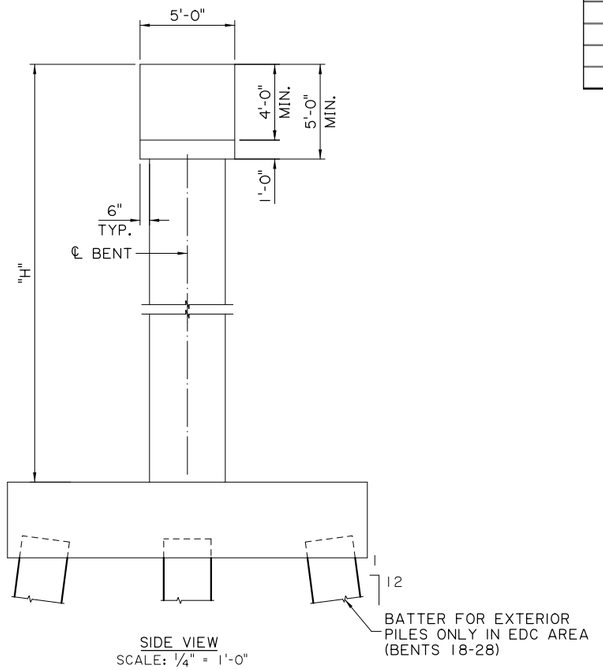

SIDE VIEW
SCALE: 1/4" = 1'-0"

BENT DIMENSION	
BENT NO.	"H"
18	42'-6"
19	42'-5"
20	42'-3"
21	42'-9"
22	42'-6"
23	42'-4"
24	42'-1"
25	42'-11"
26	43'-7"
27	43'-7"
28	44'-2"
29	43'-4"
30	43'-2"

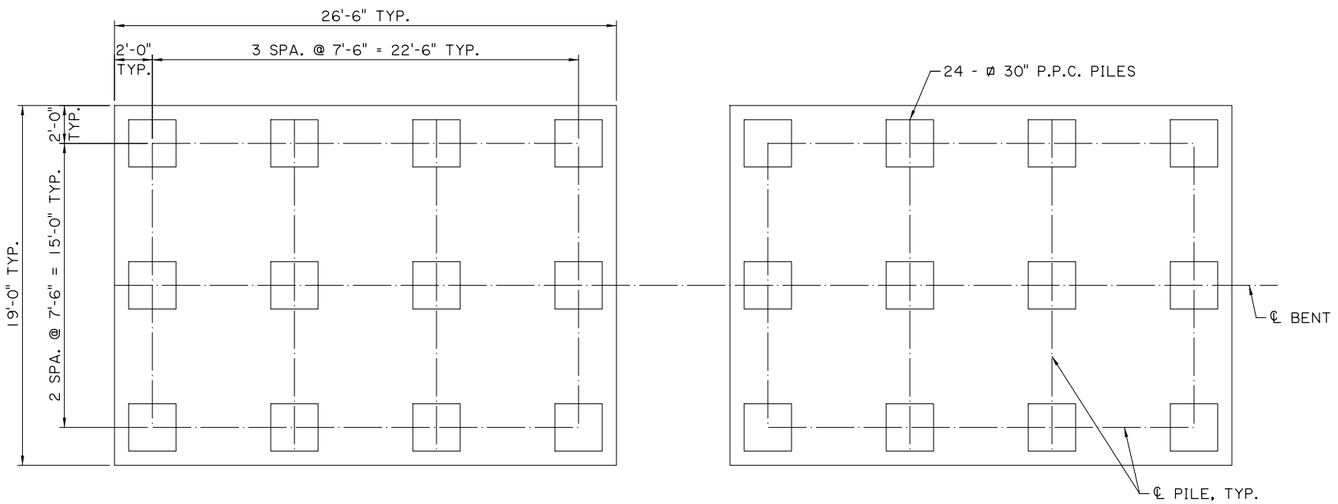

FOOTING PLAN
SCALE: 1/4" = 1'-0"

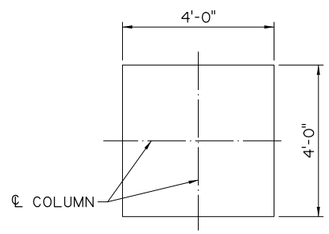

SECTION B-B
SCALE: 1/4" = 1'-0"

SHEET NUMBER 186

PARISH	CONTROL SECTION	STATE PROJECT
CALCASIEU	450-91	H.003931

DESIGN	CHECK	DETAIL	CHECK	REVIEW	SERIES
JJB	CML	KNP	JJB	3 OF 5	

TECHNICAL PROPOSAL PLANS
PRELIMINARY
NOT FOR CONSTRUCTION
ENGINEER:
ROBERT M. GRAY
LICENSE #:
45611
DATE:
5/25/23

NO.	DATE	REVISION OR CHANGE ORDER DESCRIPTION	BY

STATE OF LOUISIANA
JOHN BEL EDWARDS
GOVERNOR

B-11 SAMPSON ST. TO EB I-10 RAMP R-11 OVER UPRR SPUR

BENTS DETAILS

I-10 CALCASIEU RIVER BRIDGE IMPROVEMENTS

DOTD
LOUISIANA DEPARTMENT OF TRANSPORTATION & DEVELOPMENT

CBP
CALCASIEU BRIDGE PARTNERS

TECHNICAL PROPOSAL PLANS
5/25/2023 2:51:02 PM
Z:\Shared\1370 - I-10 Calcasieu P3\DWGS\BRIDGE\B11 - Sampson St to EB I10 ramp R11 over UPRR Spur\B11 - 01-03.dgn

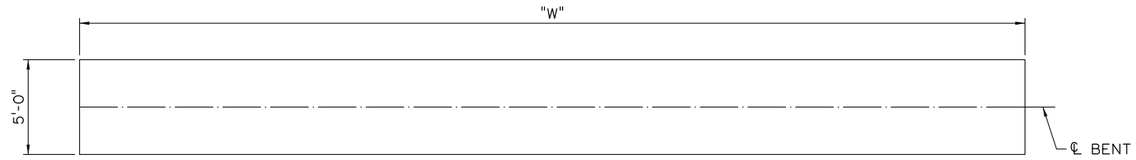

CAP PLAN
SCALE: 1/4" = 1'-0"

BENT DIMENSION			
BENT NO.	"H"	"W"	"S"
31	44'-6"	48'-4"	26'-4"
32	43'-6"	44'-0"	22'-0"

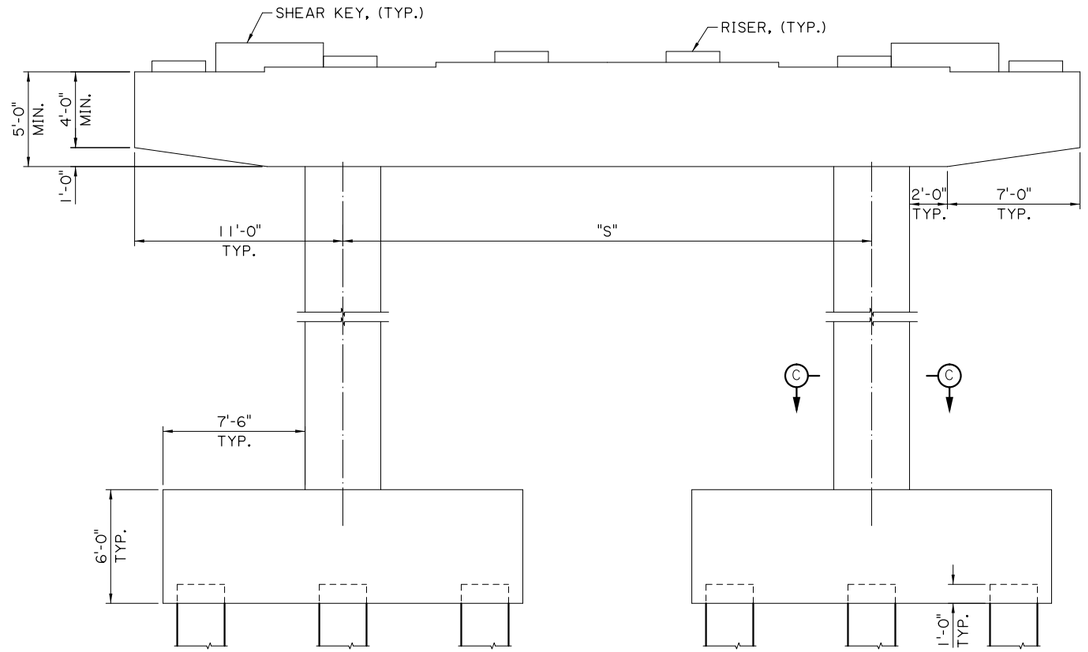

ELEVATION
SCALE: 1/4" = 1'-0"

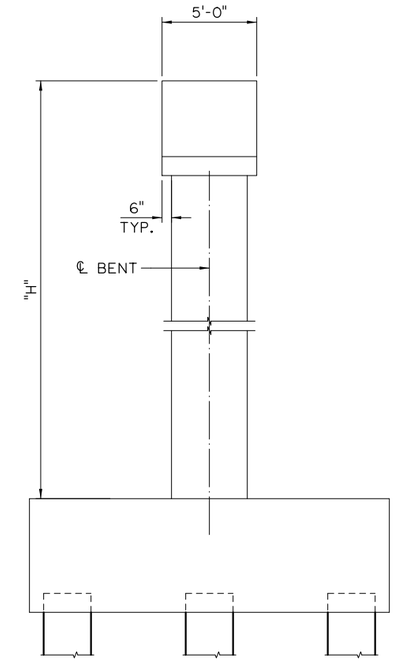

SIDE VIEW
SCALE: 1/4" = 1'-0"

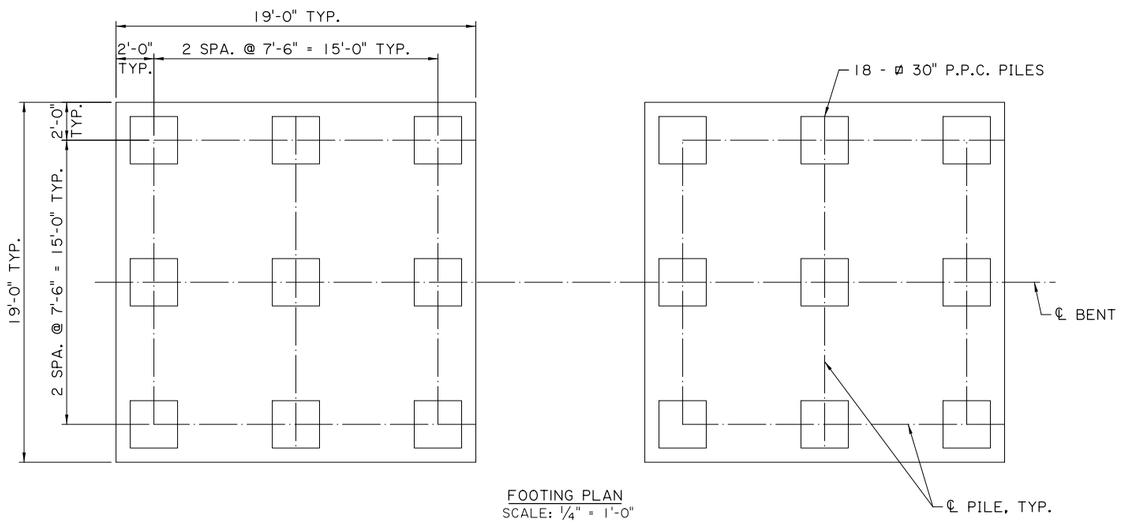

FOOTING PLAN
SCALE: 1/4" = 1'-0"

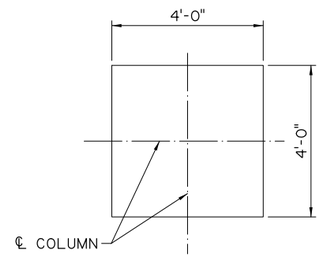

SECTION C-C
SCALE: 1/4" = 1'-0"

SHEET NUMBER 187

PARISH	CONTROL SECTION	STATE PROJECT
CALCASIEU	450-91	H.003931

DESIGN	CHECK	DETAIL	CHECK	REVIEW	SERIES
JJB	CML	KNP	JJB		4 OF 5

TECHNICAL PROPOSAL PLANS
PRELIMINARY
NOT FOR CONSTRUCTION
ENGINEER:
ROBERT M. GRAY
LICENSE #: 45611
DATE: 5/25/23

NO.	DATE	REVISION OR CHANGE ORDER DESCRIPTION	BY

STATE OF LOUISIANA
JOHN BEL EDWARDS
GOVERNOR

B-11 SAMPSON ST. TO EB I-10 RAMP R-11 OVER UPRR SPUR

BENTS DETAILS

I-10 CALCASIEU RIVER BRIDGE IMPROVEMENTS

DOTD
LOUISIANA DEPARTMENT OF TRANSPORTATION & DEVELOPMENT

CBP
CALCASIEU BRIDGE PARTNERS

TECHNICAL PROPOSAL PLANS
5/25/2023 2:51:02 PM
Z:\Shared\1370 - I-10 Calcasieu P3\DWGS\BRIDGE\B11 - Sampson St to EB I10 ramp R11 over UPRR Spur\B11 - 01-03.dgn

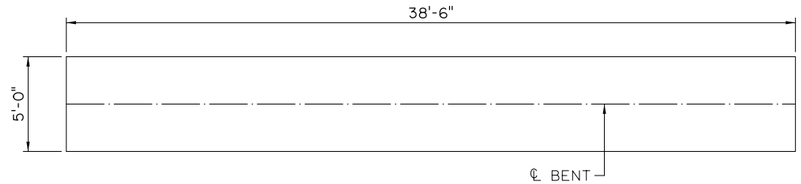

CAP PLAN
SCALE: 1/4" = 1'-0"

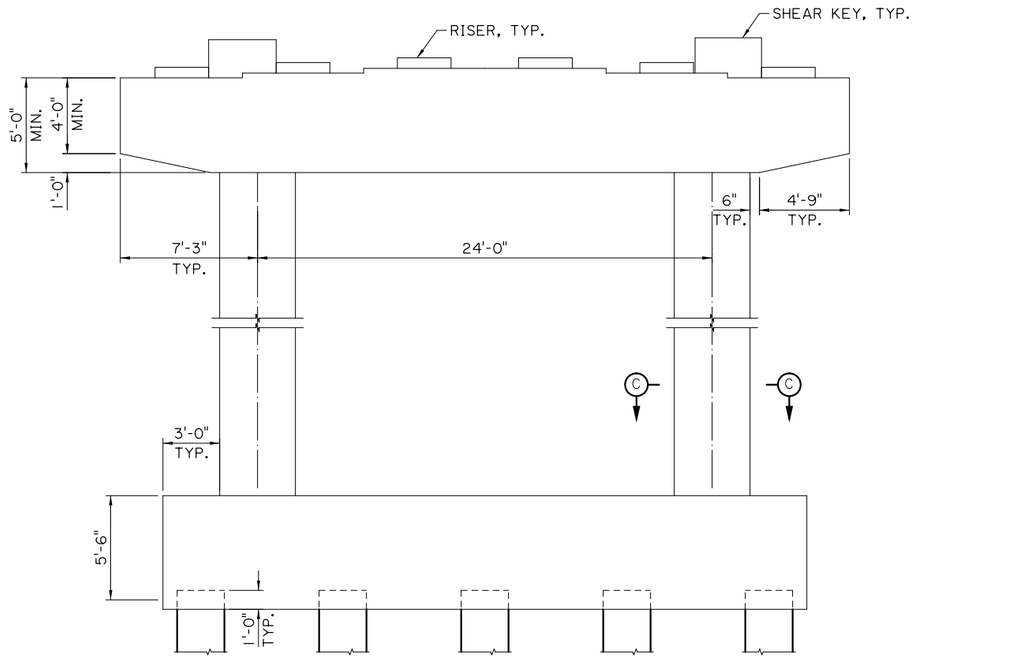

ELEVATION
SCALE: 1/4" = 1'-0"

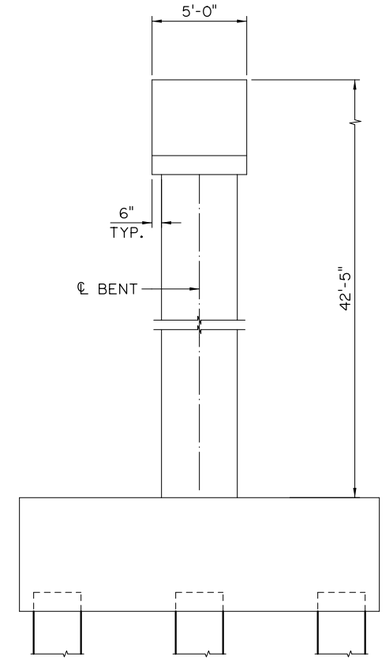

SIDE VIEW
SCALE: 1/4" = 1'-0"

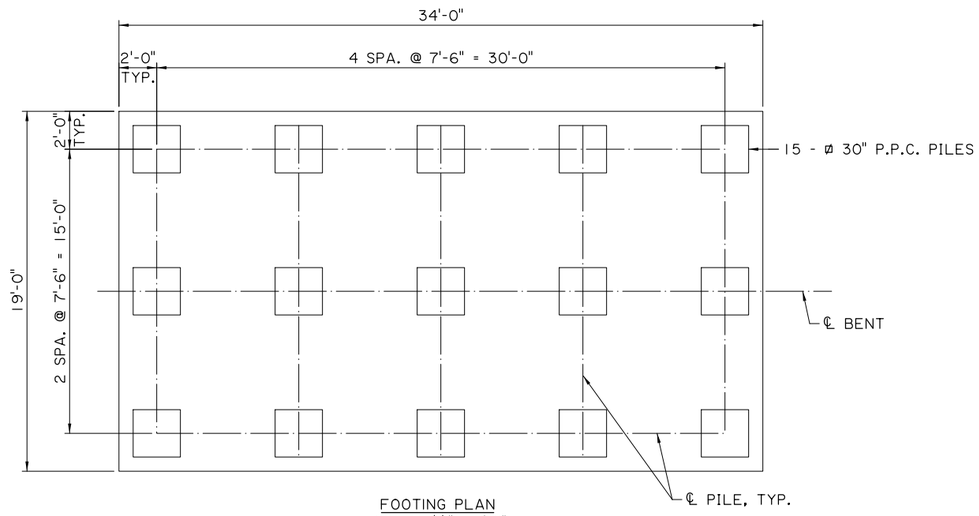

FOOTING PLAN
SCALE: 1/4" = 1'-0"

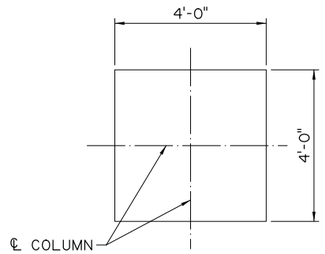

SECTION C-C
SCALE: 1/4" = 1'-0"

SHEET NUMBER	188
PARISH	CALCASIEU
CONTROL SECTION	450-91
STATE PROJECT	H.003931
DESIGN	JJB
CHECK	CML
DETAIL	KNP
CHECK	JJB
REVIEW	
SERIES #	5 OF 5

TECHNICAL PROPOSAL PLANS
PRELIMINARY
NOT FOR CONSTRUCTION
ENGINEER:
ROBERT M. GRAY
LICENSE #:
45611
DATE:
5/25/23

NO.	DATE	REVISION OR CHANGE ORDER DESCRIPTION	BY

STATE OF LOUISIANA
JOHN BEL EDWARDS
GOVERNOR

B-11 SAMPSON ST. TO EB I-10 RAMP R-11 OVER UPRR SPUR

BENT 33 DETAILS

I-10 CALCASIEU RIVER BRIDGE IMPROVEMENTS

DOTD
LOUISIANA DEPARTMENT OF TRANSPORTATION & DEVELOPMENT

CBP
CALCASIEU BRIDGE PARTNERS

TECHNICAL PROPOSAL PLANS
5/25/2023 2:53:39 PM
Z:\Shared\1370 - I-10 Calcasieu P3\DWGS\BRIDGE\B12 - Sampson St ramp R12 to Miller Ave. over UPRR Spur\B12 - 01_02.dgn

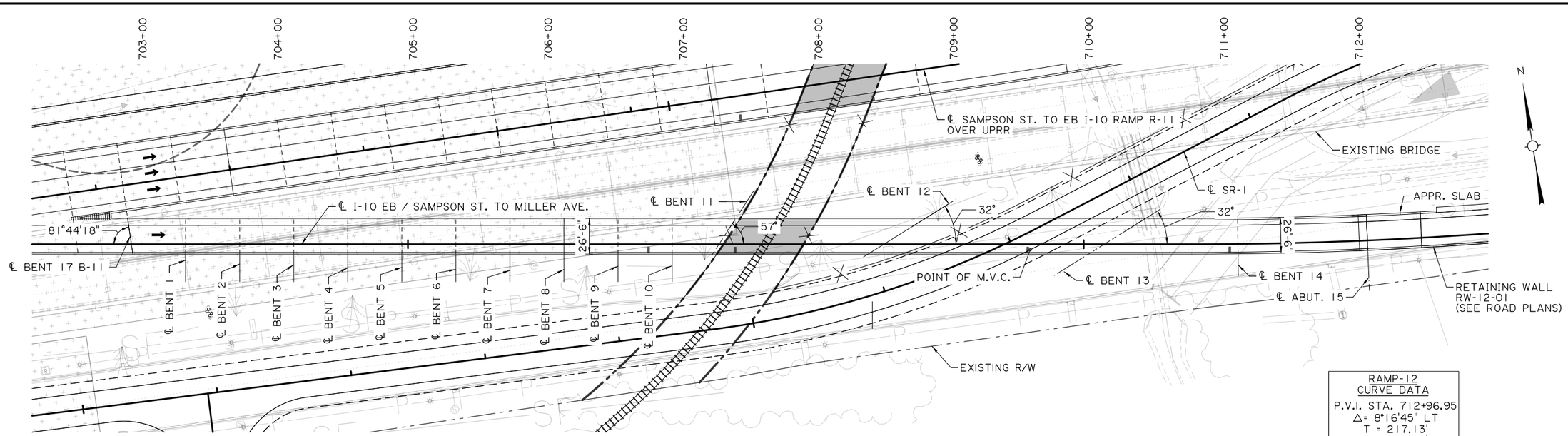

GENERAL PLAN
SCALE: 1" = 40'

RAMP-12
CURVE DATA
P.V.I. STA. 712+96.95
△= 8°16'45" LT
T = 217.13'
L = 433.50'
R = 3000'

EDC AREA

150' VERTICAL CURVE
P.V.I. 703+54.54
ELEV. 41.51
G_1 = -0.83%
G_2 = 1.11%

450' VERTICAL CURVE
P.V.I. 708+78.44
ELEV. 49.37
G_1 = 1.11%
G_2 = -6.00%

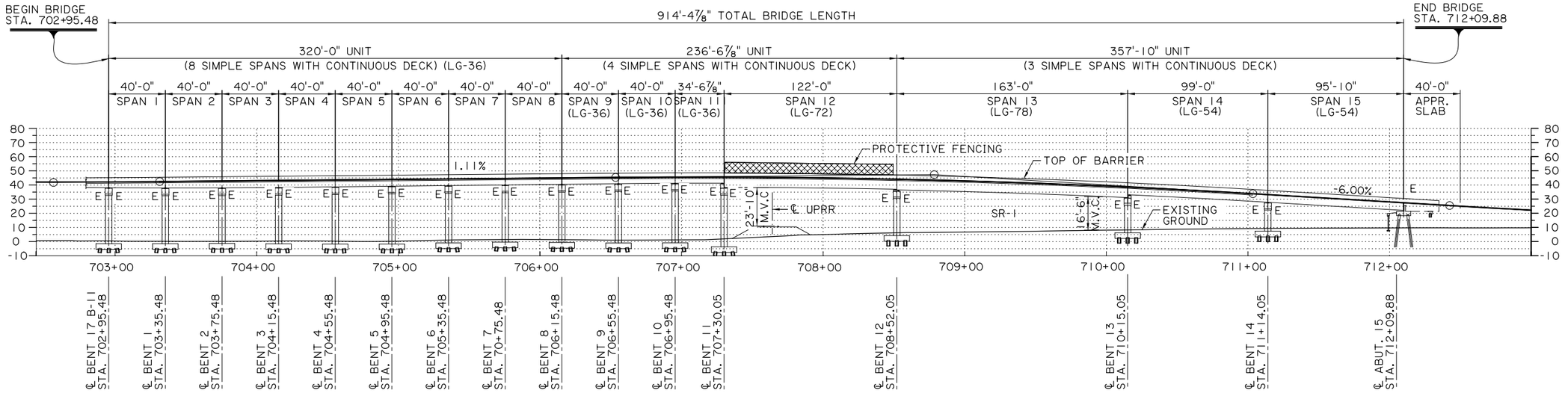

ELEVATION
SCALE: 1" = 40'

SHEET NUMBER 189

PARISH	CONTROL SECTION	STATE PROJECT
CALCASIEU	450-91	H.003931

DESIGN	CHECK	DETAIL	CHECK	REVIEW	SERIES #
JJB	CML	KNP	JJB		1 OF 1

TECHNICAL PROPOSAL PLANS
PRELIMINARY
NOT FOR CONSTRUCTION
ENGINEER:
ROBERT M. GRAY
LICENSE #: 45611
DATE: 5/25/23

NO.	DATE	REVISION OR CHANGE ORDER DESCRIPTION	BY

B-12 SAMPSON ST. RAMP R-12 TO MILLER AVE. OVER UPPR & SR-1

GENERAL PLAN AND ELEVATION

I-10 CALCASIEU RIVER BRIDGE IMPROVEMENTS

LOUISIANA DEPARTMENT OF TRANSPORTATION & DEVELOPMENT

CALCASIEU BRIDGE PARTNERS

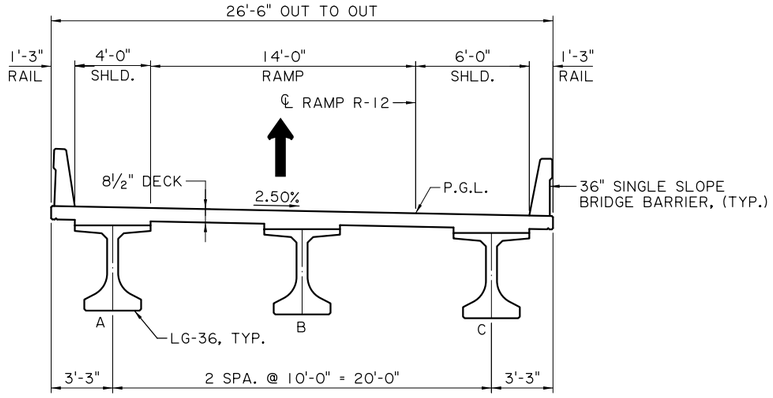

TYPICAL SECTIONS
(SPANS 1 THRU 11)
SCALE: 1/4" = 1'-0"

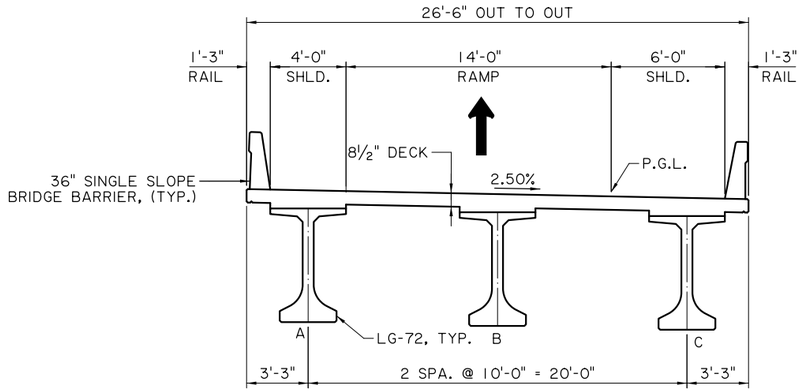

TYPICAL SECTIONS
(SPAN 12)
SCALE: 1/4" = 1'-0"

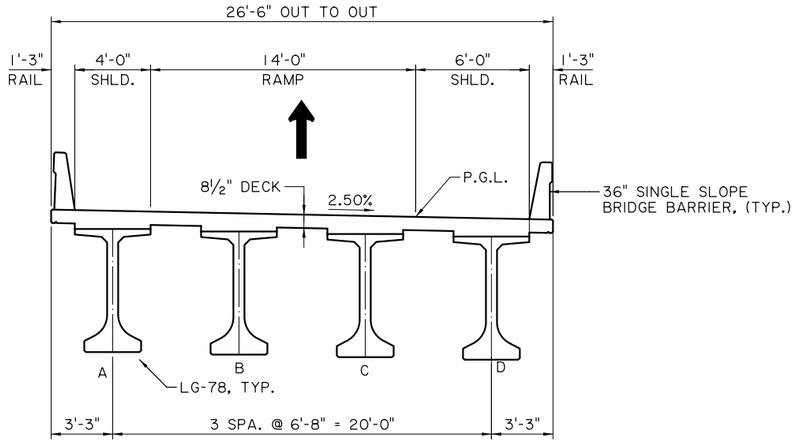

TYPICAL SECTIONS
(SPAN 13)
SCALE: 1/4" = 1'-0"

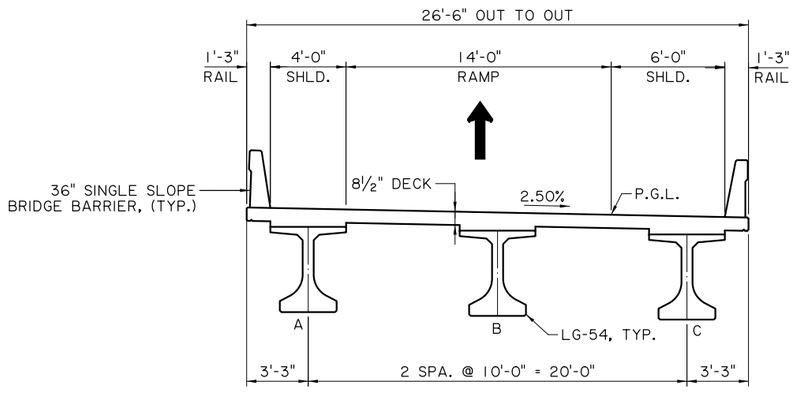

TYPICAL SECTIONS
(SPANS 14 AND 15)
SCALE: 1/4" = 1'-0"

SHEET NUMBER 190

PARISH	CONTROL SECTION	STATE PROJECT
CALCASIEU	450-91	H.003931

DESIGN	CHECK	DETAIL	CHECK	REVIEW	SERIES
JJB	CML	KNP	JJB		1 OF 1

TECHNICAL PROPOSAL PLANS
PRELIMINARY
NOT FOR CONSTRUCTION
ENGINEER: ROBERT M. GRAY
LICENSE #: 45611
DATE: 5/25/23

NO.	DATE	REVISION OR CHANGE ORDER DESCRIPTION	BY

B-12 SAMPSON ST. RAMP R-12 TO MILLER AVE. OVER UPPR & SR-1
TYPICAL SECTION
I-10 CALCASIEU RIVER BRIDGE IMPROVEMENTS

DOTD LOUISIANA DEPARTMENT OF TRANSPORTATION & DEVELOPMENT
CBP CALCASIEU BRIDGE PARTNERS

TECHNICAL PROPOSAL PLANS

5/25/2023 2:53:40 PM

Z:\Shared\1370 - I-10 Calcasieu P3\DWGS\BRIDGE\B12 - Sampson St ramp R12 to Miller Ave. over UPRR Spur\B12 - 01_02.dgn

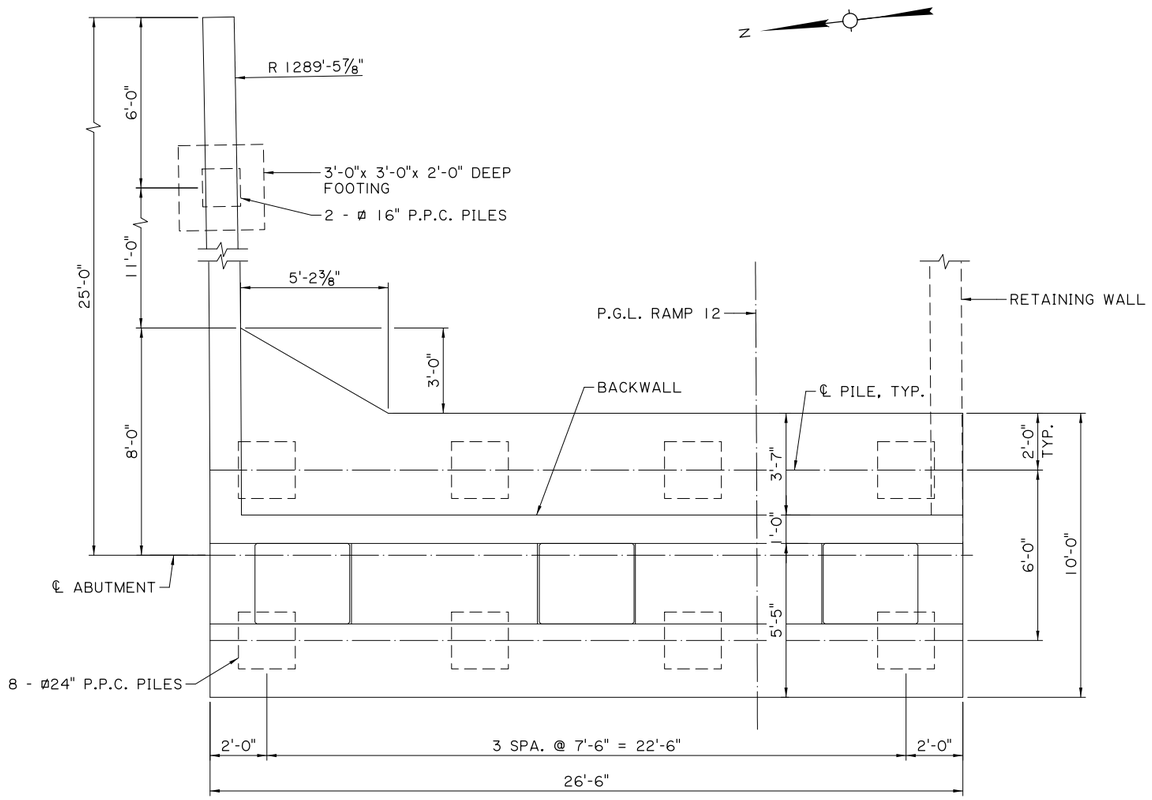

PLAN
SCALE: ⅜" = 1'-0"

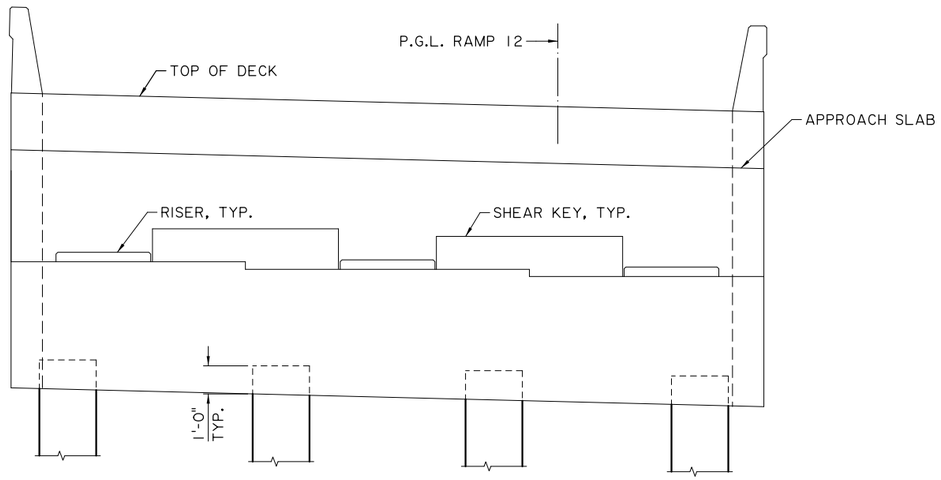

ABUTMENT ELEVATION
SCALE: ⅜" = 1'-0"

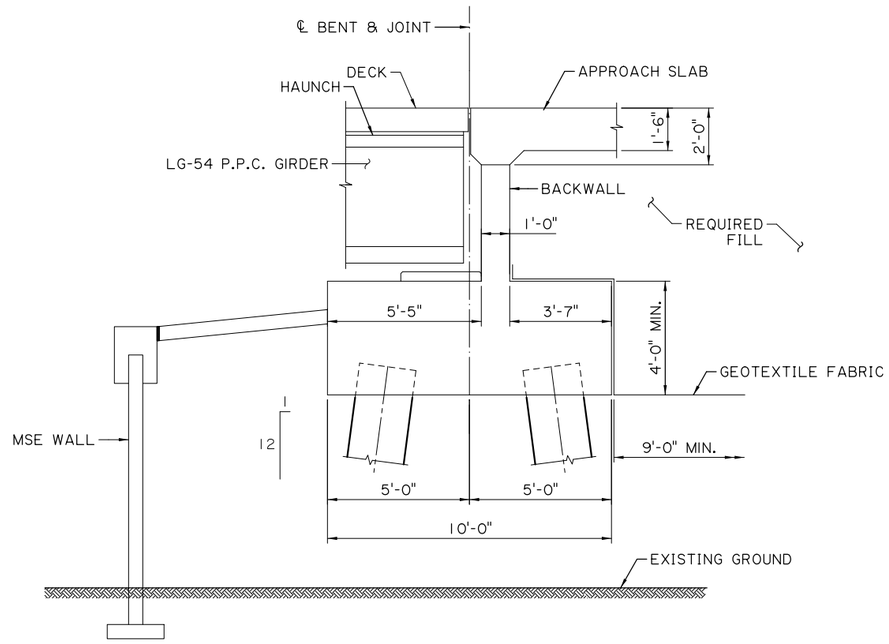

ABUTMENT SECTION
SCALE: ⅜" = 1'-0"

TECHNICAL PROPOSAL PLANS

Z:\Shared\11370 - I-10 Calcasieu P3\DWGS\BRIDGE\B12 - Sampson St ramp R12 to Miller Ave. over UPRR Spur\B12 - 01_02.dgn 5/25/2023 2:53:40 PM

SHEET NUMBER	191
PARISH	CALCASIEU
CONTROL SECTION	450-91
STATE PROJECT	H.003931
DESIGN JJB / CHECK CML	DETAIL KNP / CHECK JJB
REVIEW	SERIES # 1 OF 1

TECHNICAL PROPOSAL PLANS
PRELIMINARY
NOT FOR CONSTRUCTION
ENGINEER: ROBERT M. GRAY
LICENSE #: 45611
DATE: 5/25/23

NO.	DATE	REVISION OR CHANGE ORDER DESCRIPTION	BY

B-12 SAMPSON ST. RAMP R-12 TO MILLER AVE. OVER UPPR & SR-1
END BENT DETAILS
I-10 CALCASIEU RIVER BRIDGE IMPROVEMENTS

DOTD LOUISIANA DEPARTMENT OF TRANSPORTATION & DEVELOPMENT
CBP CALCASIEU BRIDGE PARTNERS

TECHNICAL PROPOSAL PLANS
5/25/2023 2:53:41 PM
Z:\Shared\1370 - I-10 Calcasieu P3\DWGS\BRIDGE\B12 - Sampson St ramp R12 to Miller Ave. over UPRR Spur\B12 - 01_02.dgn

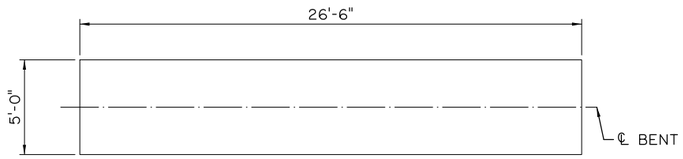

CAP PLAN
SCALE: 1/4" = 1'-0"

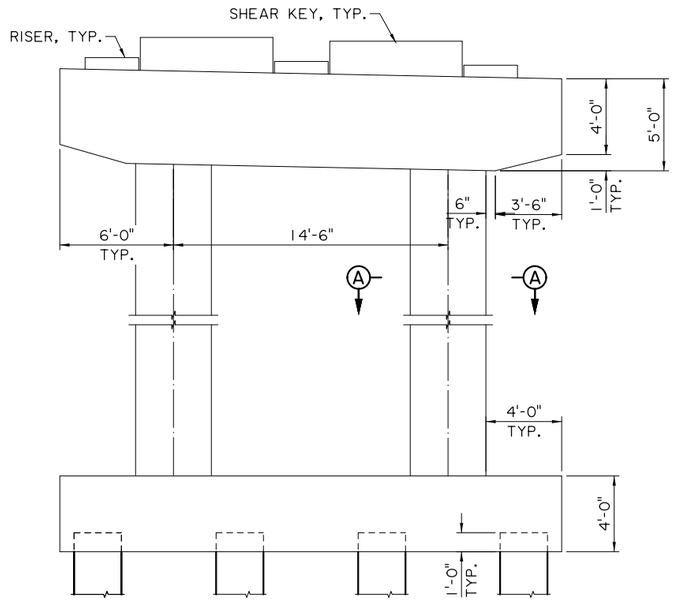

PIER ELEVATION
SCALE: 1/4" = 1'-0"

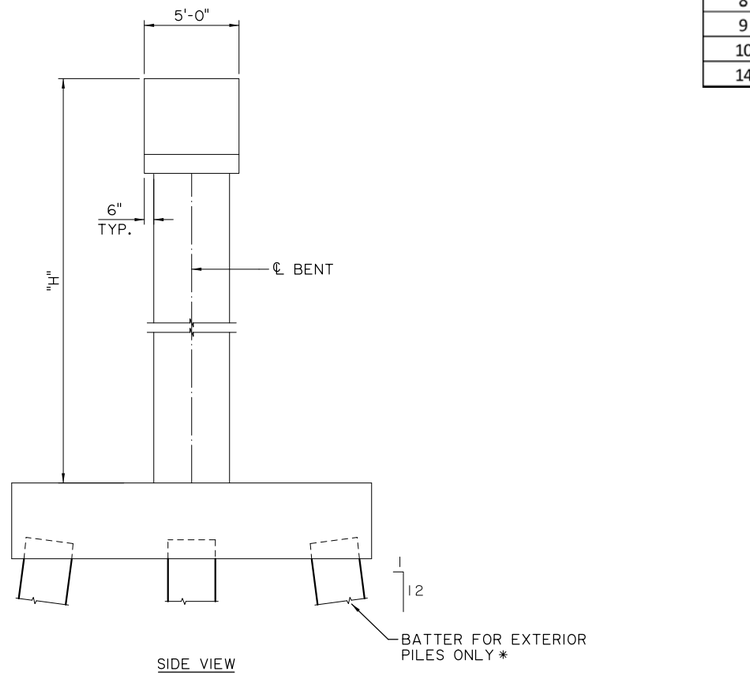

SIDE VIEW
SCALE: 1/4" = 1'-0"

* BATTER REQUIRED FOR BENTS 1 THRU 10 VERTICAL PILES AT BENT 14

BENT DIMENSION	
BENT NO.	"H"
1	39'-5"
2	39'-10"
3	40'-0"
4	40'-9"
5	41'-3"
6	40'-0"
7	41'-3"
8	41'-10"
9	42'-9"
10	43'-0"
14	22'-8"

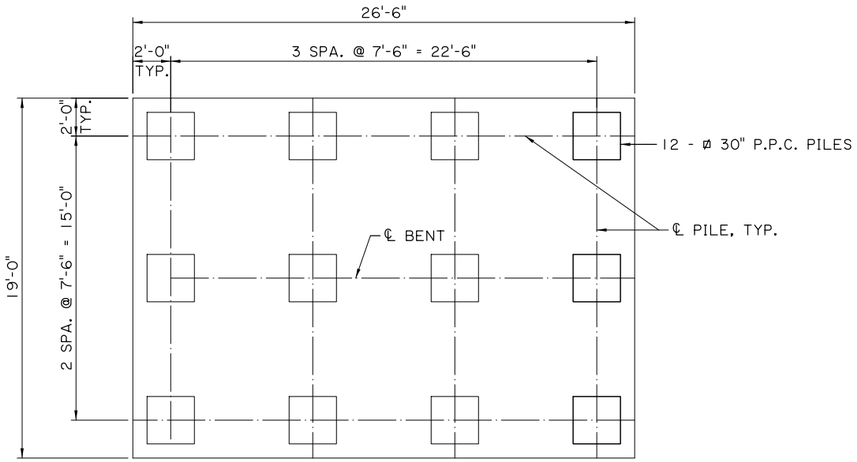

FOOTING PLAN
SCALE: 1/4" = 1'-0"

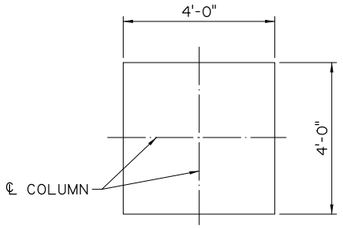

SECTION A-A
SCALE: 1/2" = 1'-0"

SHEET NUMBER	192
PARISH	CALCASIEU
CONTROL SECTION	450-91
STATE PROJECT	H.003931
DESIGN JJB / CHECK CML	DETAIL KNP / CHECK JJB
REVIEW	SERIES # 1 OF 3

TECHNICAL PROPOSAL PLANS
PRELIMINARY
NOT FOR CONSTRUCTION
ENGINEER: ROBERT M. GRAY
LICENSE #: 45611
DATE: 5/25/23

NO.	DATE	REVISION OR CHANGE ORDER DESCRIPTION	BY

B-12 SAMPSON ST. RAMP R-12 TO MILLER AVE. OVER UPPR & SR-1

BENT DETAILS

I-10 CALCASIEU RIVER BRIDGE IMPROVEMENTS

DOTD LOUISIANA DEPARTMENT OF TRANSPORTATION & DEVELOPMENT

CBP CALCASIEU BRIDGE PARTNERS

TECHNICAL PROPOSAL PLANS
5/25/2023 2:53:41 PM
Z:\Shared\11370 - I-10 Calcasieu P3\DWGS\BRIDGE\B12 - Sampson St ramp R12 to Miller Ave. over UPRR Spur\B12 - 01_02.dgn

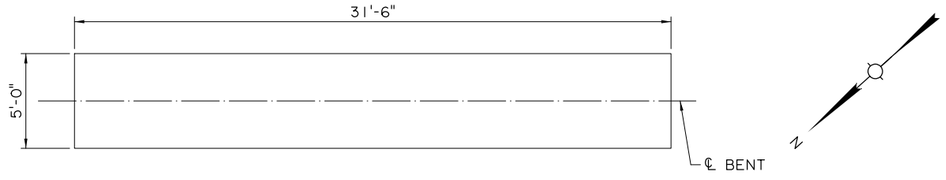

CAP PLAN
SCALE: 1/4" = 1'-0"

BENT DIMENSION	
BENT NO.	"H"
11	39'-4"

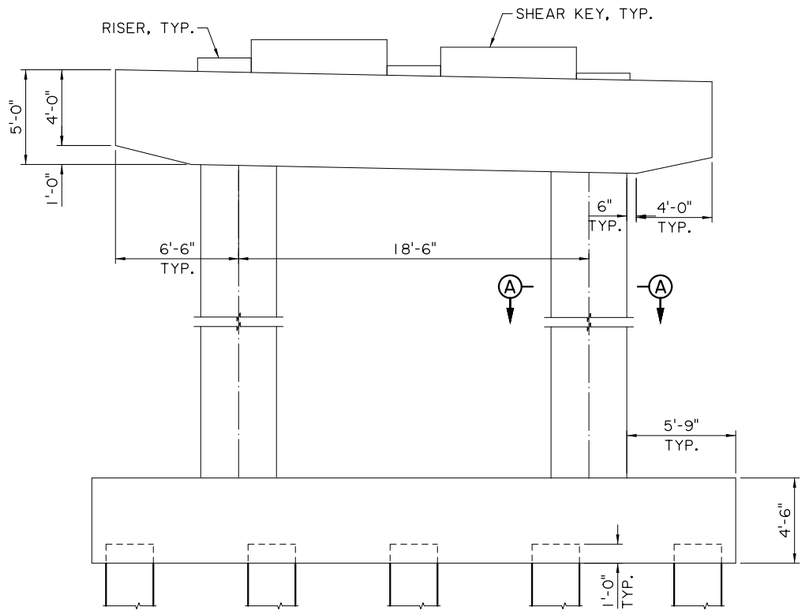

PIER ELEVATION
SCALE: 1/4" = 1'-0"

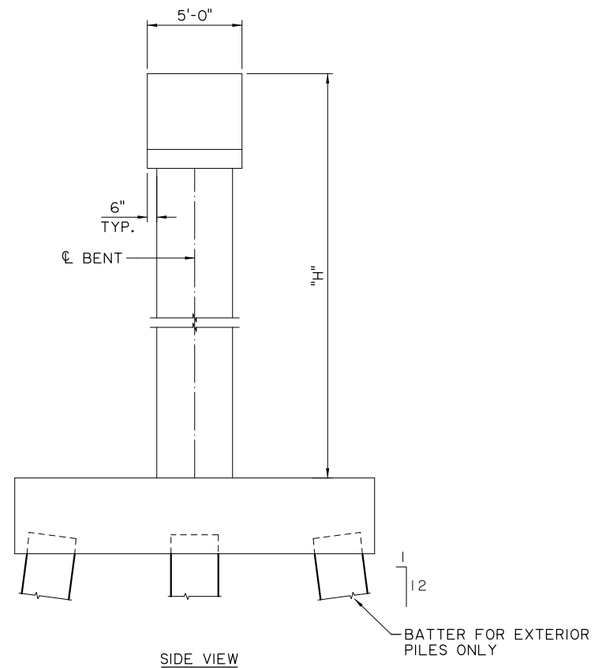

SIDE VIEW
SCALE: 1/4" = 1'-0"

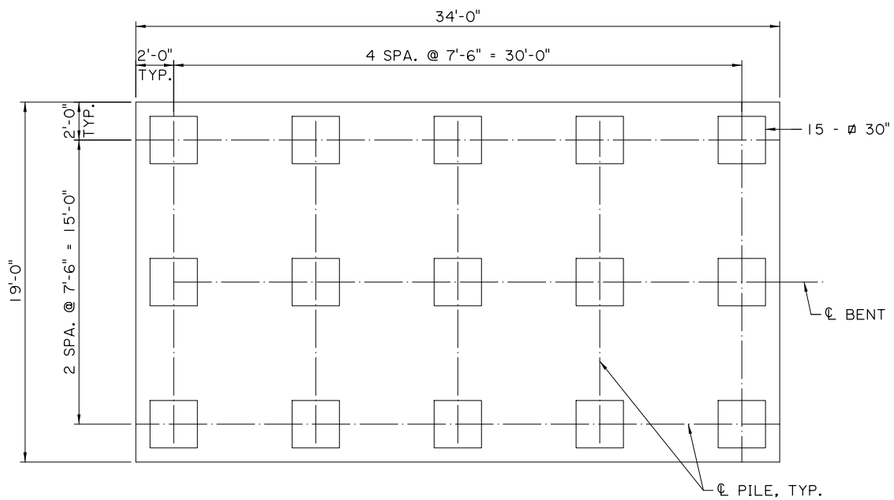

FOOTING PLAN
SCALE: 1/4" = 1'-0"

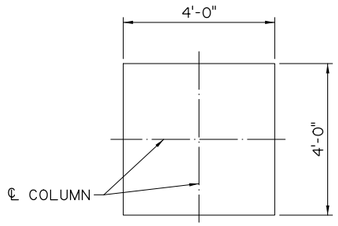

SECTION A-A
SCALE: 3/8" = 1'-0"

SHEET NUMBER	193

PARISH	CONTROL SECTION	STATE PROJECT
CALCASIEU	450-91	H.003931

DESIGN	CHECK	DETAIL	CHECK	REVIEW	SERIES #
JJB	CML	KNP	JJB		2 OF 3

TECHNICAL PROPOSAL PLANS
PRELIMINARY
NOT FOR CONSTRUCTION
ENGINEER:
ROBERT M. GRAY
LICENSE #:
45611
DATE:
5/25/23

NO.	DATE	REVISION OR CHANGE ORDER DESCRIPTION	BY

B-12 SAMPSON ST. RAMP R-12 TO MILLER AVE. OVER UPPR & SR-1

BENT DETAILS

I-10 CALCASIEU RIVER BRIDGE IMPROVEMENTS

DOTD LOUISIANA DEPARTMENT OF TRANSPORTATION & DEVELOPMENT

CBP CALCASIEU BRIDGE PARTNERS

BENT DIMENSION	
BENT NO.	"H"
12	33'-7"
13	33'-7"

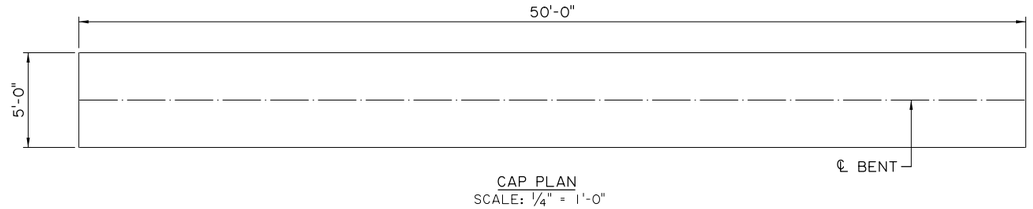

CAP PLAN
SCALE: 1/4" = 1'-0"

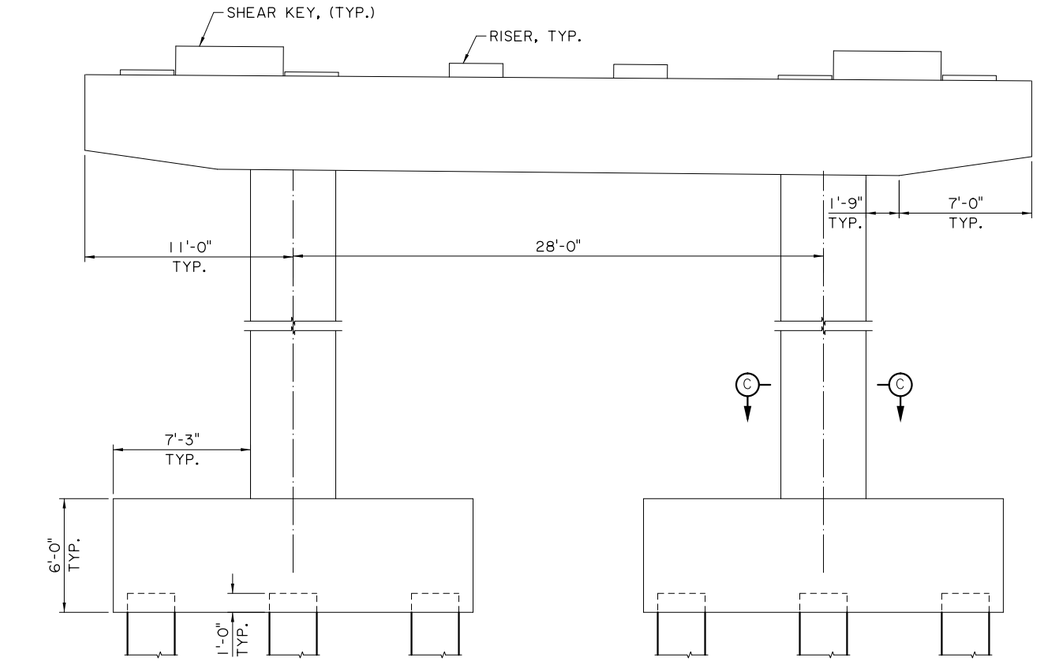

ELEVATION
SCALE: 1/4" = 1'-0"

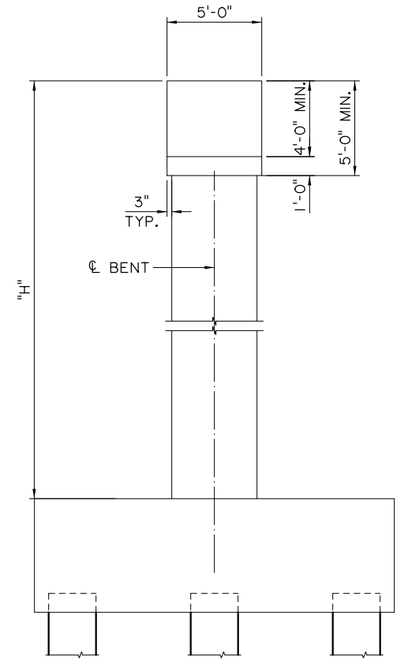

SIDE VIEW
SCALE: 1/4" = 1'-0"

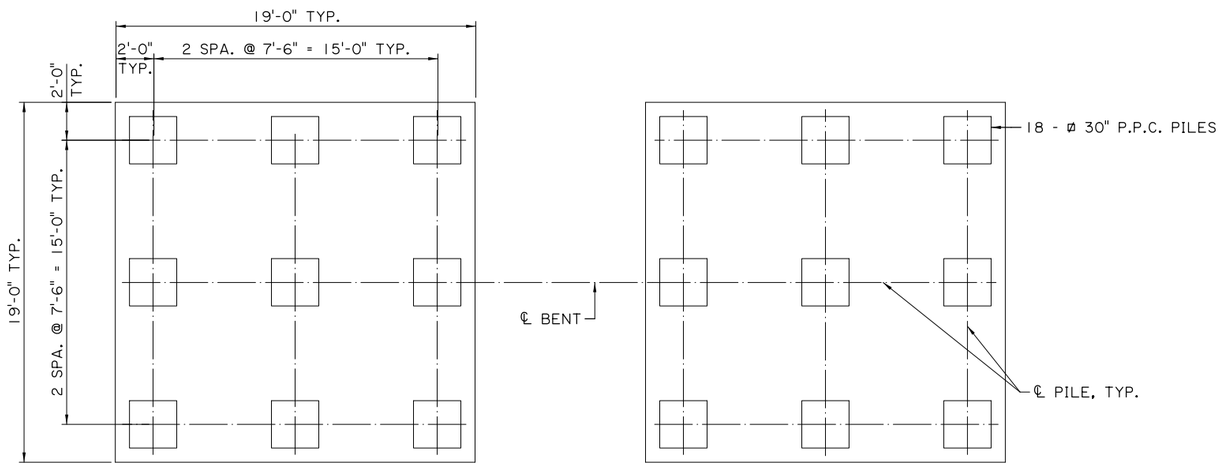

FOOTING PLAN
SCALE: 1/4" = 1'-0"

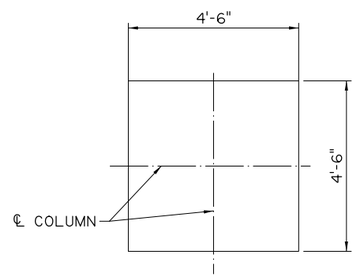

SECTION C-C
SCALE: 1/4" = 1'-0"

TECHNICAL PROPOSAL PLANS

Z:\Shared\1370 - I-10 Calcasieu P3\DWGS\BRIDGE\B12 - Sampson St ramp R12 to Miller Ave. over UPRR Spur\B12 - 01_02.dgn 5/25/2023 2:53:42 PM

SHEET NUMBER 194

PARISH	CONTROL SECTION	STATE PROJECT
CALCASIEU	450-91	H.003931

DESIGN	CHECK	DETAIL	CHECK	REVIEW	SERIES #
JJB	CML	KNP	JJB		3 OF 3

TECHNICAL PROPOSAL PLANS
PRELIMINARY
NOT FOR CONSTRUCTION
ENGINEER:
ROBERT M. GRAY
LICENSE #:
45611
DATE:
5/25/23

NO.	DATE	REVISION OR CHANGE ORDER DESCRIPTION	BY

B-12 SAMPSON ST. RAMP R-12 TO MILLER AVE. OVER UPPR & SR-1

BENT DETAILS

I-10 CALCASIEU RIVER BRIDGE IMPROVEMENTS

DOTD LOUISIANA DEPARTMENT OF TRANSPORTATION & DEVELOPMENT

CBP CALCASIEU BRIDGE PARTNERS

TECHNICAL PROPOSAL PLANS
S:\xdrive\HUVAL Projects\7262 (I-10 Calcasieu P3)\05 Drawings\Bridge\02 Border to Print\01-Lakeshore\Technical Proposal\3_GP&E Lakeshore EB.dgn
3/9/2023 9:03:05 AM

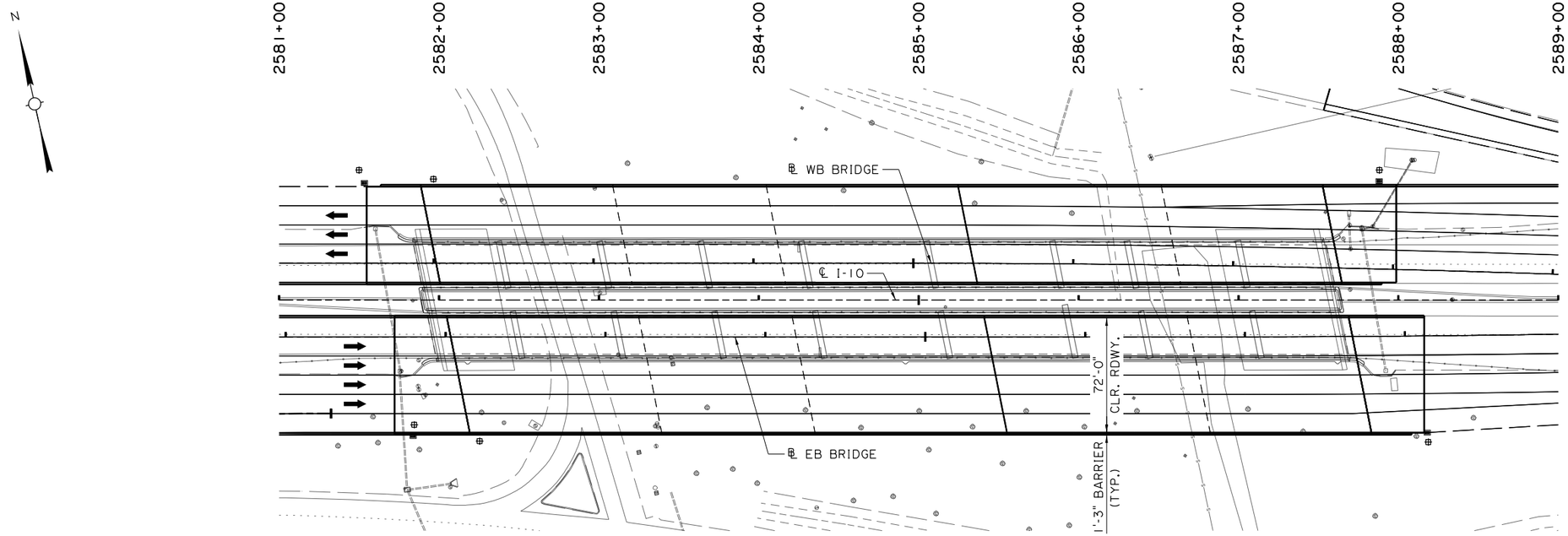

PLAN
SCALE: 1" = 40'-0"

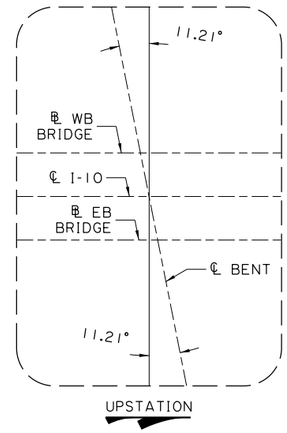

SKEW ANGLE DETAIL
(TYPICAL FOR ALL BENTS)

460' VERTICAL CURVE
(ALONG ℄ I-10)
P.V.I. STA. = 2582+91.63
P.V.I. ELEV. = 38.07'
G_1 = +3.00%
G_2 = +0.25%

400' VERTICAL CURVE
(ALONG ℄ I-10)
P.V.I. STA. = 2587+59.13
P.V.I. ELEV. = 39.26'
G_1 = +0.25%
G_2 = -3.14%

END ROADWAY
BEGIN BRIDGE
STA. 2582+07.33

END BRIDGE
BEGIN ROADWAY
STA. 2587+71.30

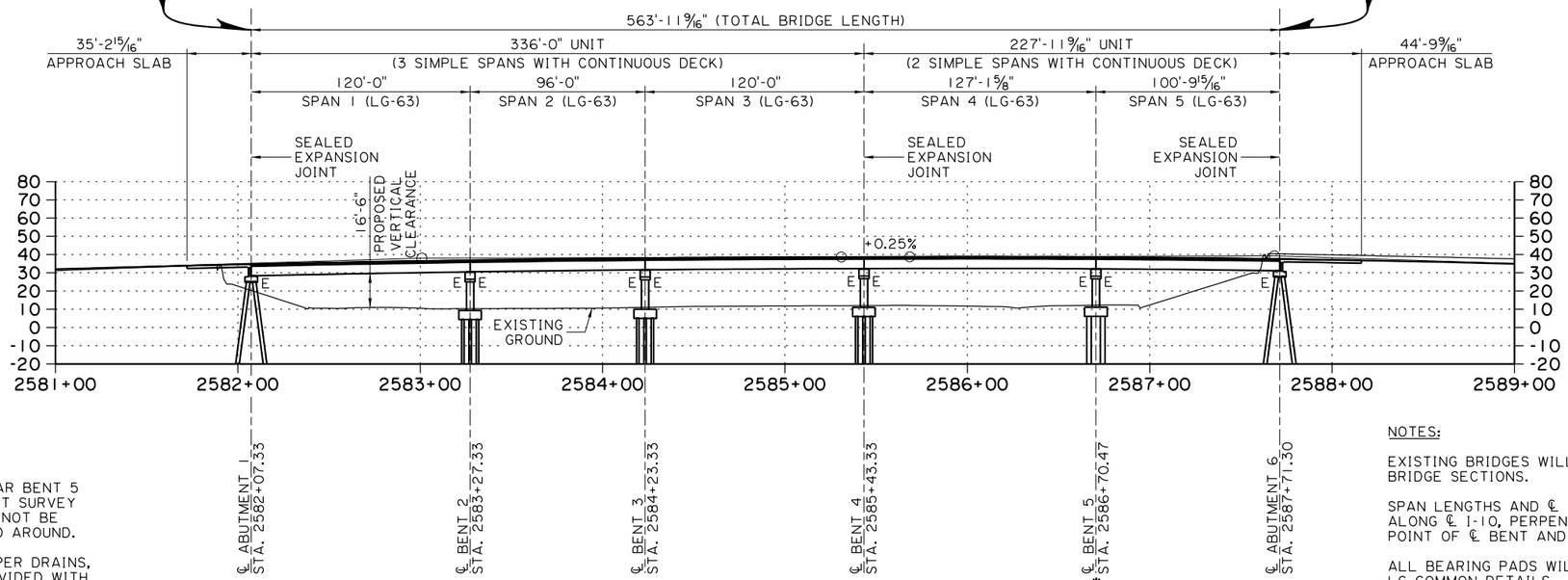

ELEVATION - EASTBOUND
SCALE: 1" = 40'-0"

* THERE IS A UTILITY LOCATED NEAR BENT 5 THAT ISN'T SHOWN IN THE CURRENT SURVEY FROM LADOTD. THIS UTILITY CAN NOT BE RELOCATED, IT WILL BE DESIGNED AROUND.

⊕ FOR MORE INFORMATION ON SCUPPER DRAINS, SEE SCUPPER DRAIN DETAILS PROVIDED WITH SPECIAL DETAILS. FOR MORE INFORMATION ON CLOSED END DRAINS, PLEASE SEE APPROACH SLAB DETAILS.

NOTES:

EXISTING BRIDGES WILL BE REMOVED AS SHOWN IN BRIDGE SECTIONS.

SPAN LENGTHS AND ℄ BENT STATIONS ARE MEASURED ALONG ℄ I-10, PERPENDICULAR TO THE INTERSECTION POINT OF ℄ BENT AND ℄ EB BRIDGE.

ALL BEARING PADS WILL BE B5 AS DESCRIBED IN THE LG COMMON DETAILS.

SLOTTED BARRIER TO BE UTILIZED EVERYWHERE, EXCEPT OVER CROSS STREETS AND RAILROAD RIGHTS OF WAY.

SHEET NUMBER 195

PARISH	CONTROL SECTION	STATE PROJECT
CALCASIEU	450-91	H.003931

DESIGN	CHECK	DETAIL	CHECK	REVIEW	SERIES #
M. HEBERT	K. WERTHER	K. CART	M. HEBERT		

TECHNICAL PROPOSAL PLANS
PRELIMINARY
NOT FOR CONSTRUCTION
ENGINEER:
MATTHEW L. HEBERT
LICENSE #: 37713
DATE: 3/9/2023

NO.	DATE	REVISION OR CHANGE ORDER DESCRIPTION	BY

B-13 (LAKESHORE)
GENERAL PLAN AND ELEVATION
EASTBOUND

I-10 CALCASIEU RIVER BRIDGE IMPROVEMENTS

DOTD LOUISIANA DEPARTMENT OF TRANSPORTATION & DEVELOPMENT
CBP CALCASIEU BRIDGE PARTNERS

TECHNICAL PROPOSAL PLANS
S:\xdrive\HUVAL Projects\7262 (I-10 Calcasieu P3)\05 Drawings\Bridge\02 Border to Print\01-Lakeshore\Technical Proposal\4_GP&E Lakeshore WB.dgn
3/9/2023 9:04:07 AM

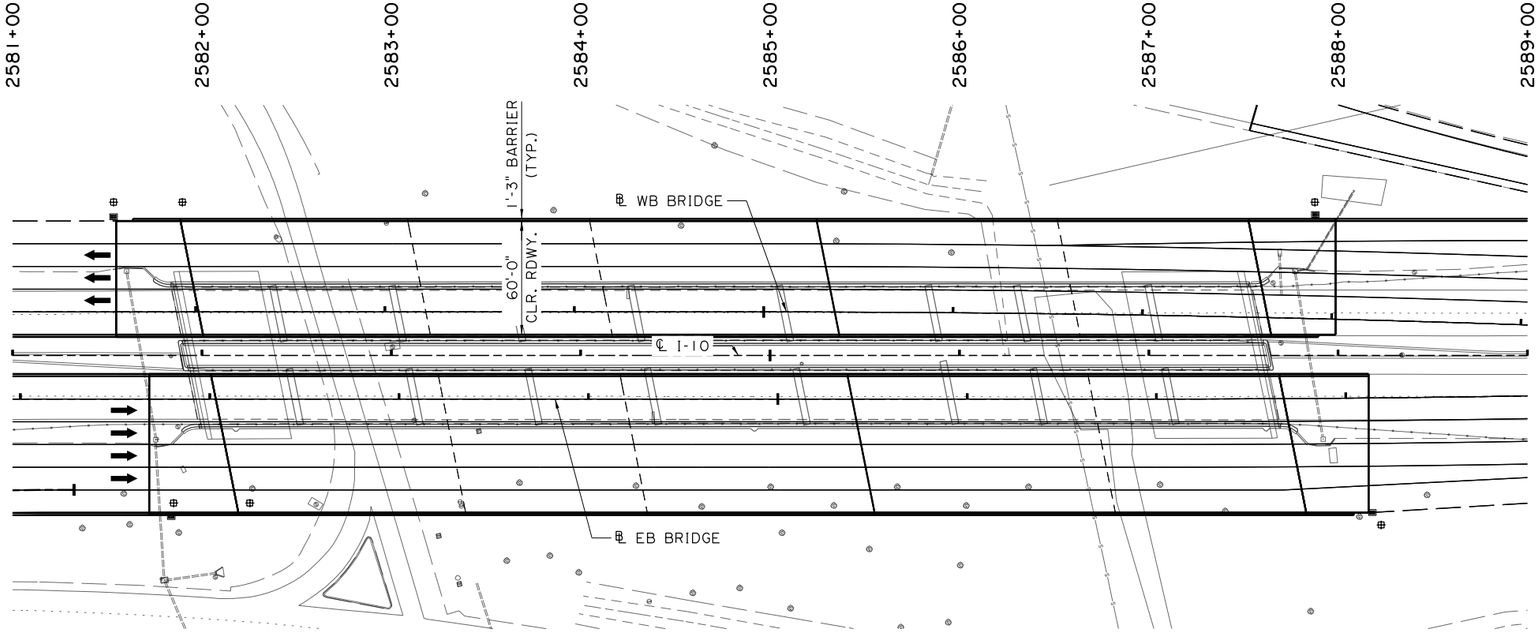

PLAN
SCALE: 1" = 40'-0"

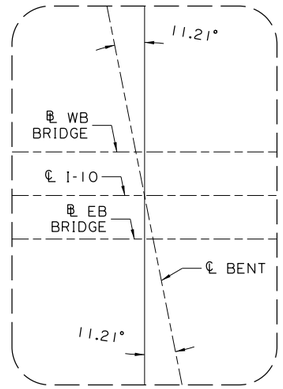

SKEW ANGLE DETAIL
(TYPICAL FOR ALL BENTS)

460' VERTICAL CURVE
(ALONG ℄ I-10)
P.V.I. STA. = 2582+91.63
P.V.I. ELEV. = 38.07'
G_1 = +3.00%
G_2 = +0.25%

400' VERTICAL CURVE
(ALONG ℄ I-10)
P.V.I. STA. = 2587+59.13
P.V.I. ELEV. = 39.26'
G_1 = +0.25%
G_2 = -3.14%

END ROADWAY
BEGIN BRIDGE
STA. 2581+98.22

END BRIDGE
BEGIN ROADWAY
STA. 2587+62.81

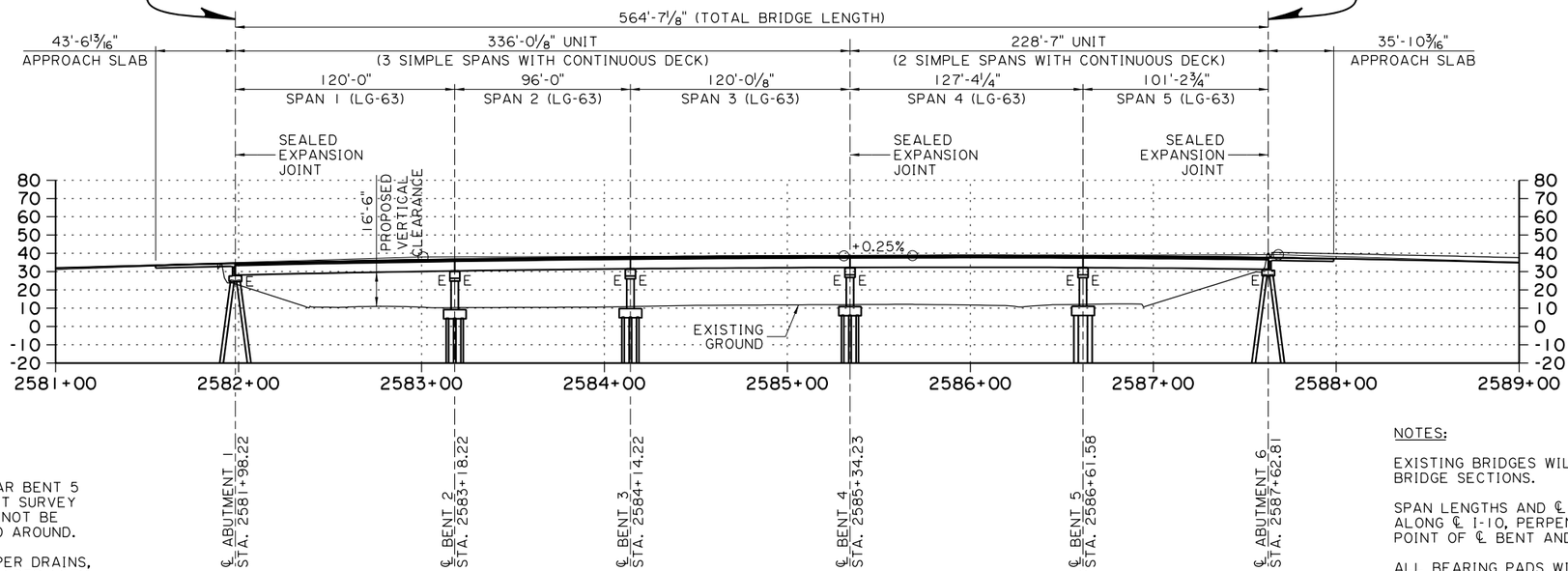

ELEVATION - WESTBOUND
SCALE: 1" = 40'-0"

* THERE IS A UTILITY LOCATED NEAR BENT 5 THAT ISN'T SHOWN IN THE CURRENT SURVEY FROM LADOTD. THIS UTILITY CAN NOT BE RELOCATED, IT WILL BE DESIGNED AROUND.

⊕ FOR MORE INFORMATION ON SCUPPER DRAINS, SEE SCUPPER DRAIN DETAILS PROVIDED WITH SPECIAL DETAILS. FOR MORE INFORMATION ON CLOSED END DRAINS, PLEASE SEE APPROACH SLAB DETAILS.

NOTES:

EXISTING BRIDGES WILL BE REMOVED AS SHOWN IN BRIDGE SECTIONS.

SPAN LENGTHS AND ℄ BENT STATIONS ARE MEASURED ALONG ℄ I-10, PERPENDICULAR TO THE INTERSECTION POINT OF ℄ BENT AND ℄ EB BRIDGE.

ALL BEARING PADS WILL BE B5 AS DESCRIBED IN THE LG COMMON DETAILS.

SLOTTED BARRIER TO BE UTILIZED EVERYWHERE, EXCEPT OVER CROSS STREETS AND RAILROAD RIGHTS OF WAY.

SHEET NUMBER 196

PARISH	CONTROL SECTION	STATE PROJECT
CALCASIEU	450-91	H.003931

DESIGN	CHECK	DETAIL	CHECK	REVIEW	SERIES #
M. HEBERT	K. WERTHER	K. CART	M. HEBERT		

TECHNICAL PROPOSAL PLANS
PRELIMINARY
NOT FOR CONSTRUCTION
ENGINEER:
MATTHEW L. HEBERT
LICENSE #: 37713
DATE: 3/9/2023

NO.	DATE	REVISION OR CHANGE ORDER DESCRIPTION	BY

STATE OF LOUISIANA
JOHN BEL EDWARDS
GOVERNOR

B-13 (LAKESHORE)
GENERAL PLAN AND ELEVATION
WESTBOUND

I-10 CALCASIEU RIVER BRIDGE IMPROVEMENTS

DOTD
LOUISIANA DEPARTMENT OF TRANSPORTATION & DEVELOPMENT

CBP
CALCASIEU BRIDGE PARTNERS

TECHNICAL PROPOSAL PLANS
S:\xdrive\HUVAL Projects\7262 (I-10 Calcasieu P3)\05 Drawings\Bridge\02 Border to Print\01-Lakeshore\Technical Proposal\5-8_Bridge Sections at Lakeshore.dgn 5/10/2023 4:06:41 PM

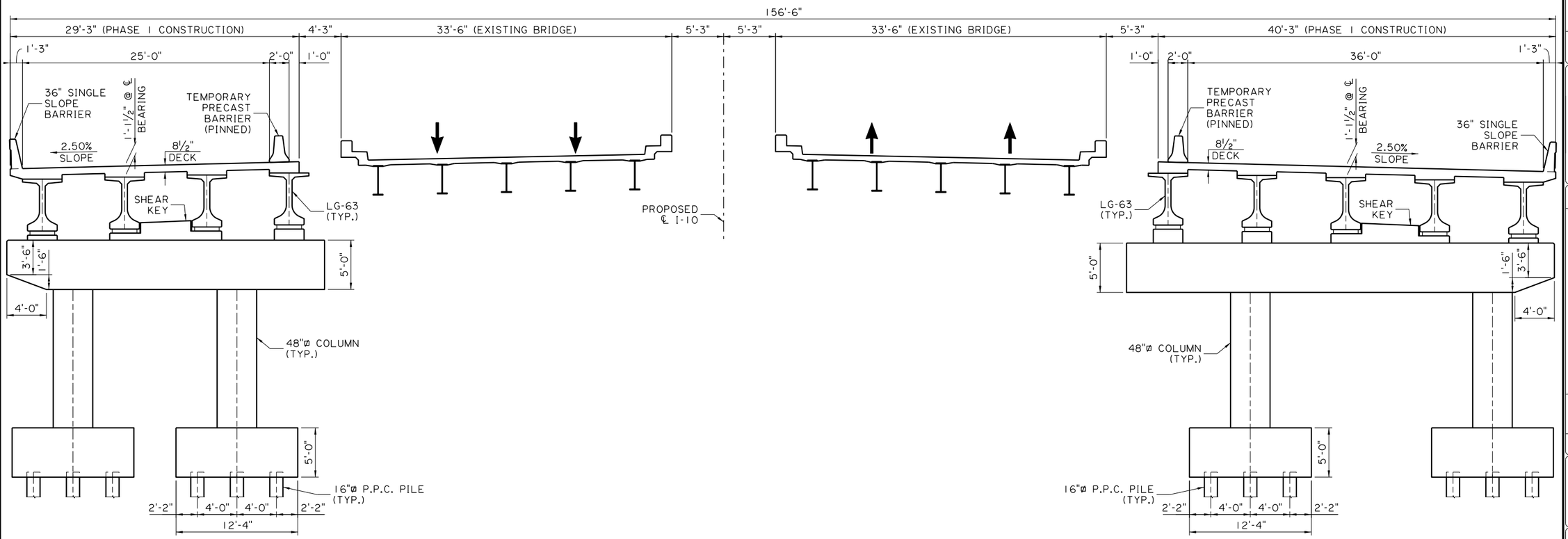

LAKESHORE DRIVE - PHASE I

(BENTS 2-4) (LOOKING UPSTATION)
SCALE: 3/16" = 1'-0"

SHEET NUMBER	197
PARISH	CALCASIEU
CONTROL SECTION	450-91
STATE PROJECT	H.003931
DESIGN M. HEBERT / CHECK K. WERTHER	DETAIL K. CART / CHECK M. HEBERT / REVIEW / SERIES • 1 OF 4

TECHNICAL PROPOSAL PLANS
PRELIMINARY
NOT FOR CONSTRUCTION
ENGINEER: MATTHEW L. HEBERT
LICENSE #: 37713
DATE: 5/10/2023

NO.	DATE	REVISION OR CHANGE ORDER DESCRIPTION	BY

B-13 (LAKESHORE)
BRIDGE SECTIONS

I-10 CALCASIEU RIVER BRIDGE IMPROVEMENTS

DOTD LOUISIANA DEPARTMENT OF TRANSPORTATION & DEVELOPMENT

CBP CALCASIEU BRIDGE PARTNERS

TECHNICAL PROPOSAL PLANS
S:\xdrive\HUVAL Projects\7262 (I-10 Calcasieu P3)\05 Drawings\Bridge\02 Border to Print\01-Lakeshore\Technical Proposal\5-8_Bridge Sections at Lakeshore.dgn 5/10/2023 4:06:57 PM

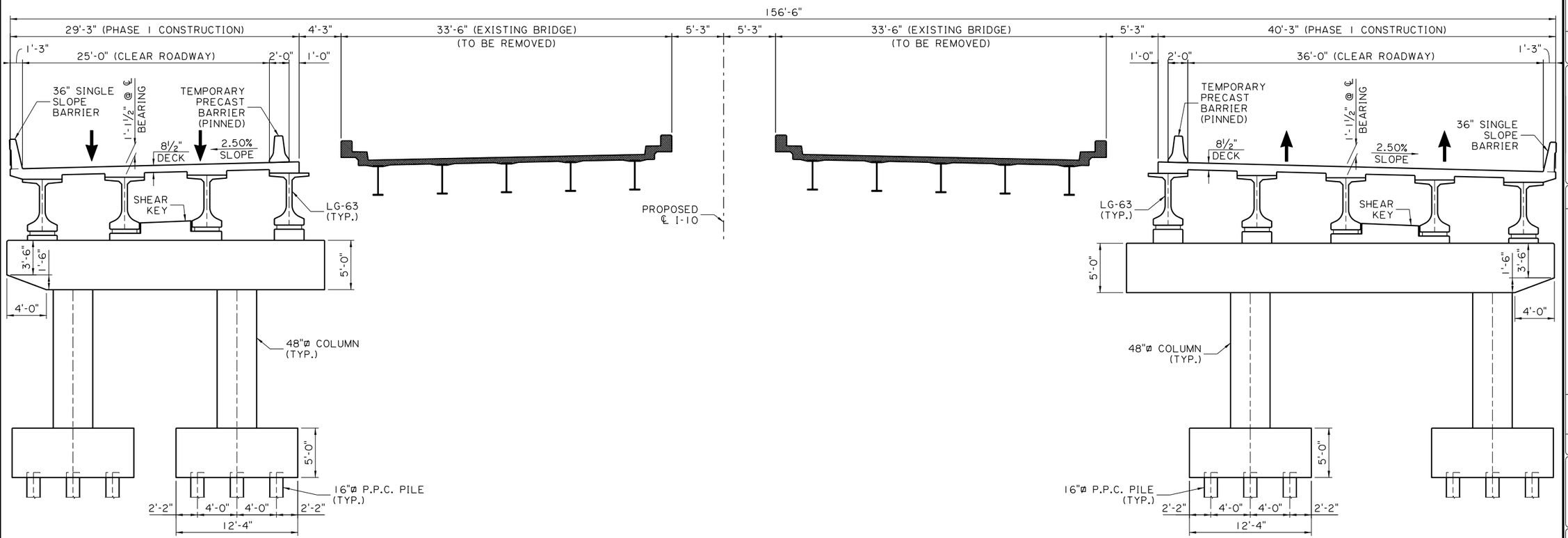

LAKESHORE DRIVE - PHASE I REMOVAL

(BENTS 2-4) (LOOKING UPSTATION)
SCALE: 3/16" = 1'-0"

SHEET NUMBER	198
PARISH	CALCASIEU
CONTROL SECTION	450-91
STATE PROJECT	H.003931
DESIGN	M. HEBERT
CHECK	K. WERTHER
DETAIL	K. CART
CHECK	M. HEBERT
REVIEW	
SERIES	2 OF 4

TECHNICAL PROPOSAL PLANS
PRELIMINARY
NOT FOR CONSTRUCTION
ENGINEER:
MATTHEW L. HEBERT
LICENSE #: 37713
DATE: 5/10/2023

NO.	DATE	REVISION OR CHANGE ORDER DESCRIPTION	BY

B-13 (LAKESHORE)
BRIDGE SECTIONS

I-10 CALCASIEU RIVER BRIDGE IMPROVEMENTS

LOUISIANA DEPARTMENT OF TRANSPORTATION & DEVELOPMENT

CALCASIEU BRIDGE PARTNERS

TECHNICAL PROPOSAL PLANS
S:\xdrive\HUVAL Projects\7262 (I-10 Calcasieu P3)\05 Drawings\Bridge\02 Border to Print\01-Lakeshore\Technical Proposal\5-8_Bridge Sections at Lakeshore.dgn 5/10/2023 4:07:12 PM

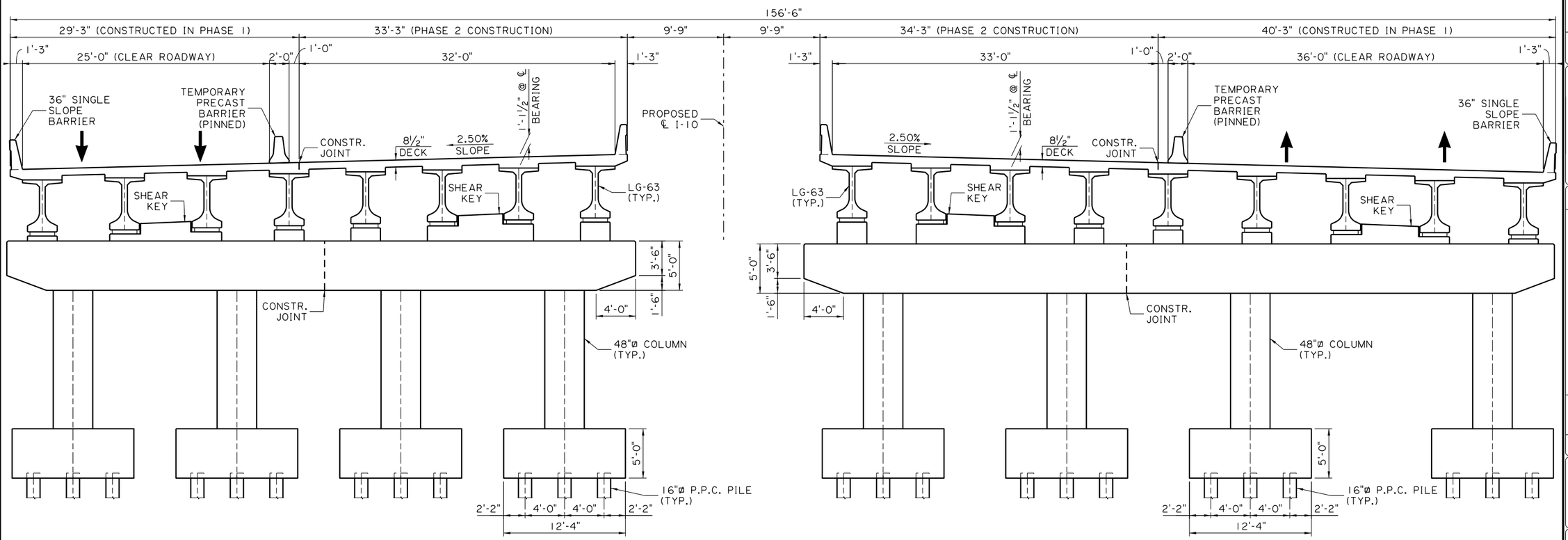

LAKESHORE DRIVE - PHASE 2

(BENTS 2-4) (LOOKING UPSTATION)
SCALE: 3/16" = 1'-0"

SHEET NUMBER	199
PARISH	CALCASIEU
CONTROL SECTION	450-91
STATE PROJECT	H.003931
DESIGN	M. HEBERT
CHECK	K. WERTHER
DETAIL	K. CART
CHECK	M. HEBERT
REVIEW	
SERIES	3 OF 4

TECHNICAL PROPOSAL PLANS
PRELIMINARY
NOT FOR CONSTRUCTION
ENGINEER: MATTHEW L. HEBERT
LICENSE #: 37713
DATE: 5/10/2023

NO.	DATE	REVISION OR CHANGE ORDER DESCRIPTION	BY

STATE OF LOUISIANA

B-13 (LAKESHORE)
BRIDGE SECTIONS

I-10 CALCASIEU RIVER BRIDGE IMPROVEMENTS

DOTD LOUISIANA DEPARTMENT OF TRANSPORTATION & DEVELOPMENT

CBP CALCASIEU BRIDGE PARTNERS

TECHNICAL PROPOSAL PLANS
S:\xdrive\HUVAL Projects\7262 (I-10 Calcasieu P3)\05 Drawings\Bridge\02 Border to Print\01-Lakeshore\Technical Proposal\5-8_Bridge Sections at Lakeshore.dgn 5/10/2023 4:07:29 PM

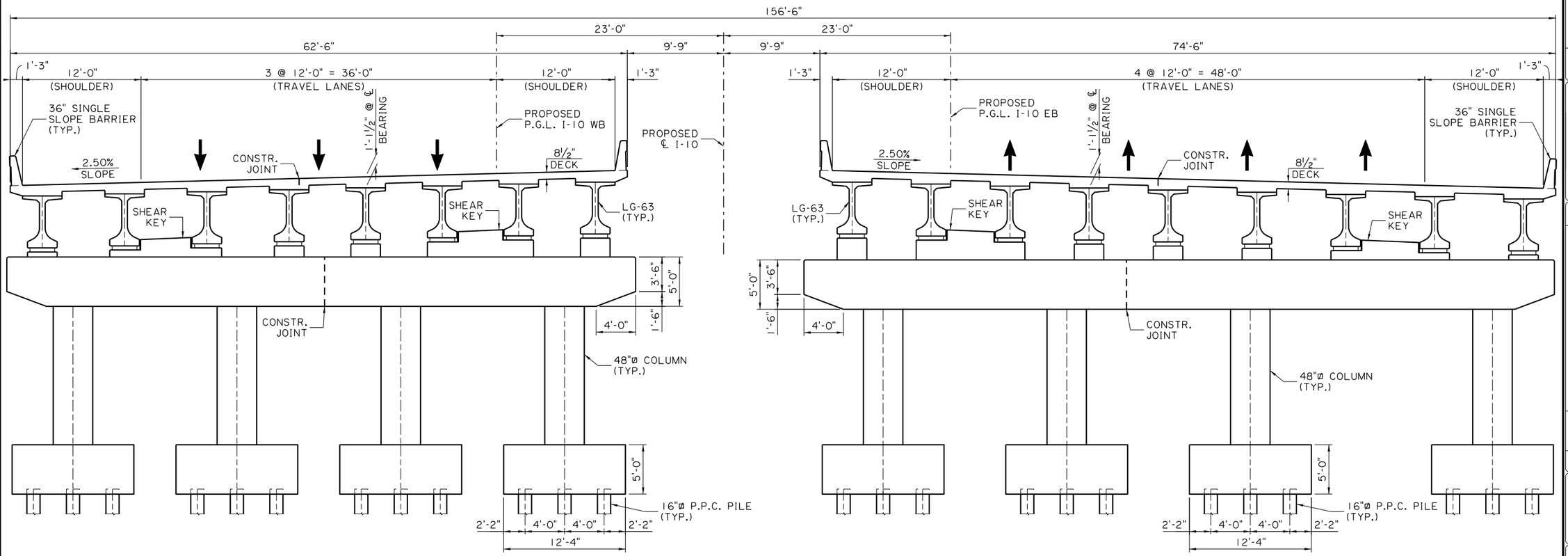

LAKESHORE DRIVE - FINISHED SECTION

(BENTS 2-4) (LOOKING UPSTATION)
SCALE: 3/16" = 1'-0"

SHEET NUMBER	200

PARISH	CONTROL SECTION	STATE PROJECT
CALCASIEU	450-91	H.003931

DESIGN	M. HEBERT	DETAIL	K. CART	REVIEW	
CHECK	K. WERTHER	CHECK	M. HEBERT	SERIES	4 OF 4

TECHNICAL PROPOSAL PLANS
PRELIMINARY
NOT FOR CONSTRUCTION
ENGINEER:
MATTHEW L. HEBERT
LICENSE #: 37713
DATE: 5/10/2023

NO.	DATE	REVISION OR CHANGE ORDER DESCRIPTION	BY

STATE OF LOUISIANA

B-13 (LAKESHORE)
BRIDGE SECTIONS

I-10 CALCASIEU RIVER BRIDGE IMPROVEMENTS

DOTD LOUISIANA DEPARTMENT OF TRANSPORTATION & DEVELOPMENT

CBP CALCASIEU BRIDGE PARTNERS

TECHNICAL PROPOSAL PLANS

S:\xdrive\HUVAL Projects\7262 (I-10 Calcasieu P3)\05 Drawings\Bridge\02 Border to Print\01-Lakeshore\Technical Proposal\6_Foundation Layout_Lakeshore (1 of 3).dgn 3/9/2023 9:07:13 AM

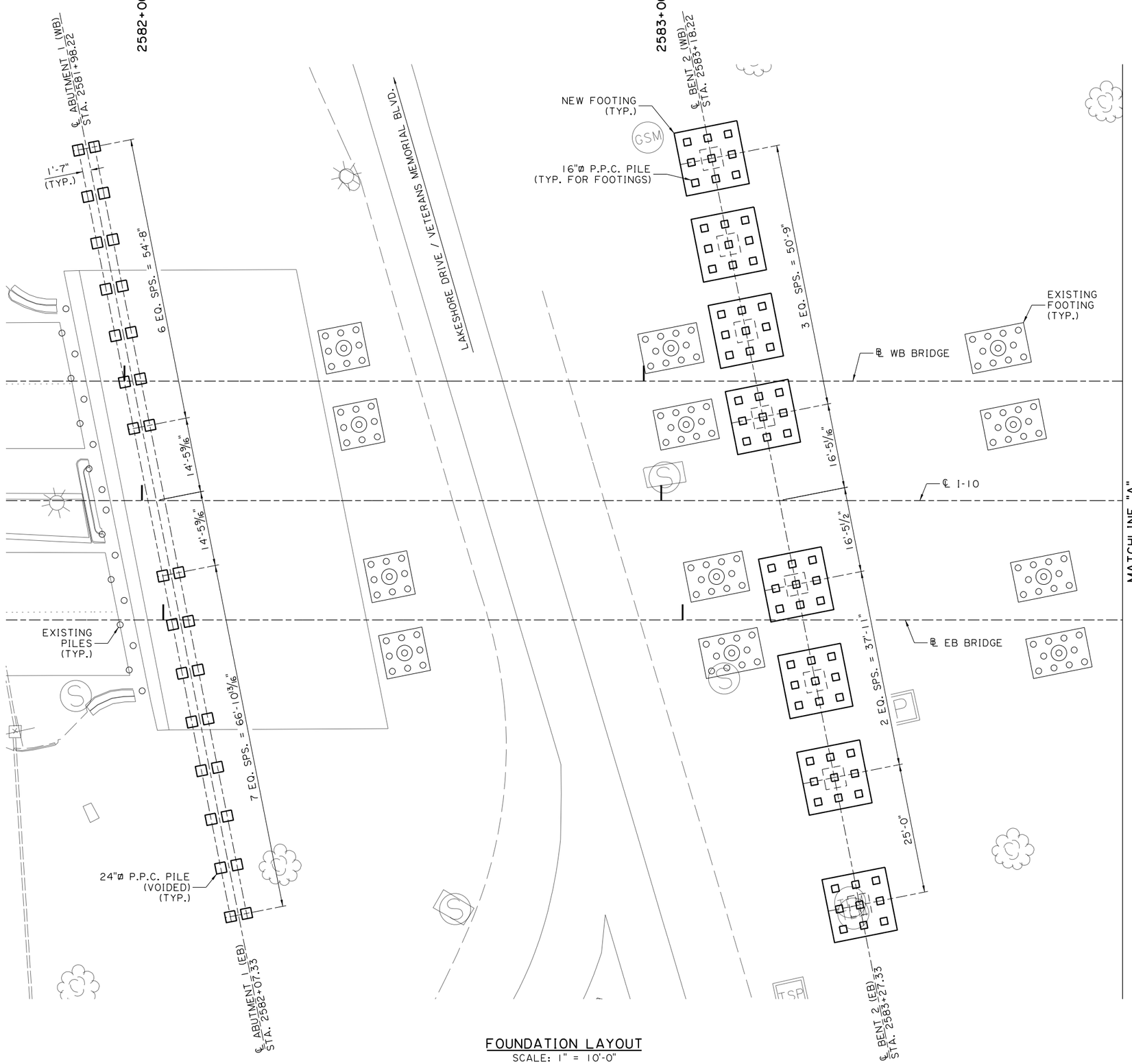

FOUNDATION LAYOUT
SCALE: 1" = 10'-0"

SKEW ANGLE DETAIL
(TYPICAL FOR ALL BENTS)

SHEET NUMBER	201

PARISH	CONTROL SECTION	STATE PROJECT
CALCASIEU	450-91	H.003931

DESIGN	M. HEBERT
CHECK	K. WERTHER
DETAIL	K. CART
CHECK	M. HEBERT
REVIEW	
SERIES	1 OF 3

TECHNICAL PROPOSAL PLANS
PRELIMINARY
NOT FOR CONSTRUCTION
ENGINEER:
MATTHEW L. HEBERT
LICENSE #: 37713
DATE: 3/9/2023

NO.	DATE	REVISION OR CHANGE ORDER DESCRIPTION	BY

B-13 (LAKESHORE)
FOUNDATION LAYOUT

I-10 CALCASIEU RIVER BRIDGE IMPROVEMENTS

LOUISIANA DEPARTMENT OF TRANSPORTATION & DEVELOPMENT

CALCASIEU BRIDGE PARTNERS

TECHNICAL PROPOSAL PLANS

S:\xdrive\HUVAL Projects\7262 (I-10 Calcasieu P3)\05 Drawings\Bridge\02 Border to Print\01-Lakeshore\Technical Proposal\7_Foundation Layout_Lakeshore (2 of 3).dgn 3/9/2023 9:08:03 AM

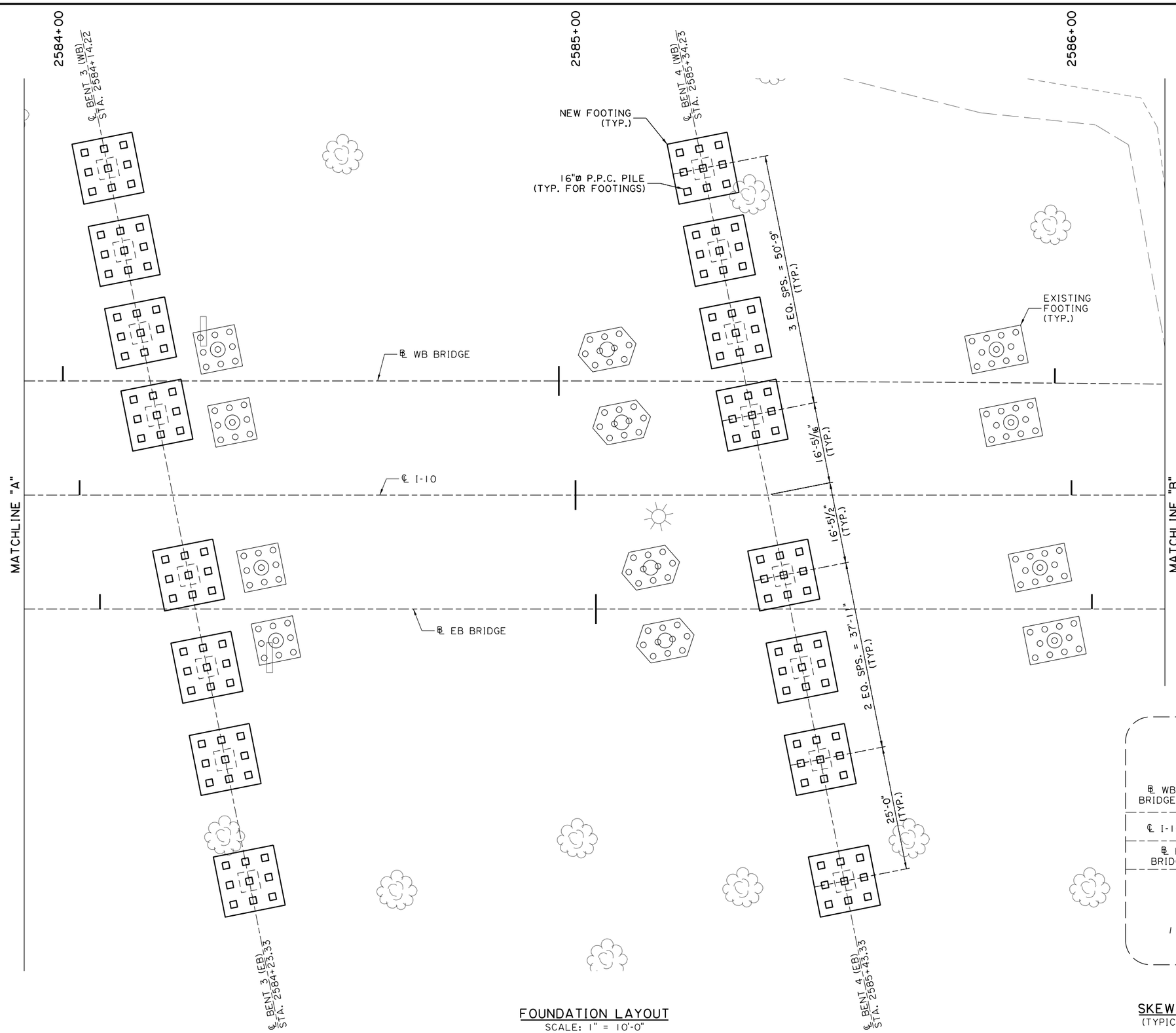

FOUNDATION LAYOUT
SCALE: 1" = 10'-0"

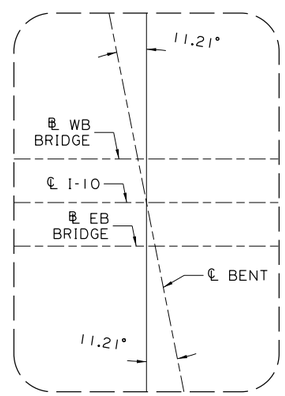

SKEW ANGLE DETAIL
(TYPICAL FOR ALL BENTS)

SHEET NUMBER	202

PARISH	CONTROL SECTION	STATE PROJECT
CALCASIEU	450-91	H.003931

DESIGN	M. HEBERT	DETAIL	K. CART
CHECK	K. WERTHER	CHECK	M. HEBERT
		REVIEW	
		SERIES •	2 OF 3

TECHNICAL PROPOSAL PLANS
PRELIMINARY
NOT FOR CONSTRUCTION
ENGINEER:
MATTHEW L. HEBERT
LICENSE #:
37713
DATE:
3/9/2023

NO.	DATE	REVISION OR CHANGE ORDER DESCRIPTION	BY

B-13 (LAKESHORE)
FOUNDATION LAYOUT

I-10 CALCASIEU RIVER BRIDGE IMPROVEMENTS

LOUISIANA DEPARTMENT OF TRANSPORTATION & DEVELOPMENT

CALCASIEU BRIDGE PARTNERS

TECHNICAL PROPOSAL PLANS

S:\xdrive\HUVAL Projects\7262 (I-10 Calcasieu P3)\05 Drawings\Bridge\02 Border to Print\01-Lakeshore\Technical Proposal\8_Foundation Layout_Lakeshore (3 of 3).dgn 3/9/2023 9:08:49 AM



FOUNDATION LAYOUT
SCALE: 1" = 10'-0"

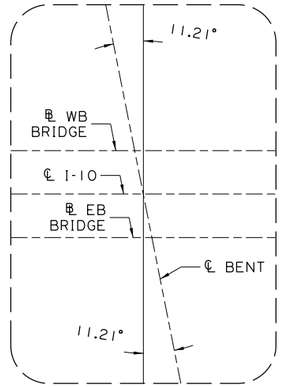

SKEW ANGLE DETAIL
(TYPICAL FOR ALL BENTS)

SHEET NUMBER	203

PARISH	CONTROL SECTION	STATE PROJECT
CALCASIEU	450-91	H.003931

DESIGN	M. HEBERT	DETAIL	K. CART	
CHECK	K. WERTHER	CHECK	M. HEBERT	
			REVIEW	SERIES • 3 OF 3

TECHNICAL PROPOSAL PLANS
PRELIMINARY
NOT FOR CONSTRUCTION
ENGINEER: MATTHEW L. HEBERT
LICENSE #: 37713
DATE: 3/9/2023

NO.	DATE	REVISION OR CHANGE ORDER DESCRIPTION	BY

B-13 (LAKESHORE)
FOUNDATION LAYOUT

I-10 CALCASIEU RIVER BRIDGE IMPROVEMENTS

LOUISIANA DEPARTMENT OF TRANSPORTATION & DEVELOPMENT

CALCASIEU BRIDGE PARTNERS

TECHNICAL PROPOSAL PLANS
S:\xdrive\HUVAL Projects\7262 (I-10 Calcasieu P3)\05 Drawings\Bridge\02 Border to Print\01-Lakeshore\Technical Proposal\9-10_Footing Details_Lakeshore.dgn 3/9/2023 9:10:07 AM

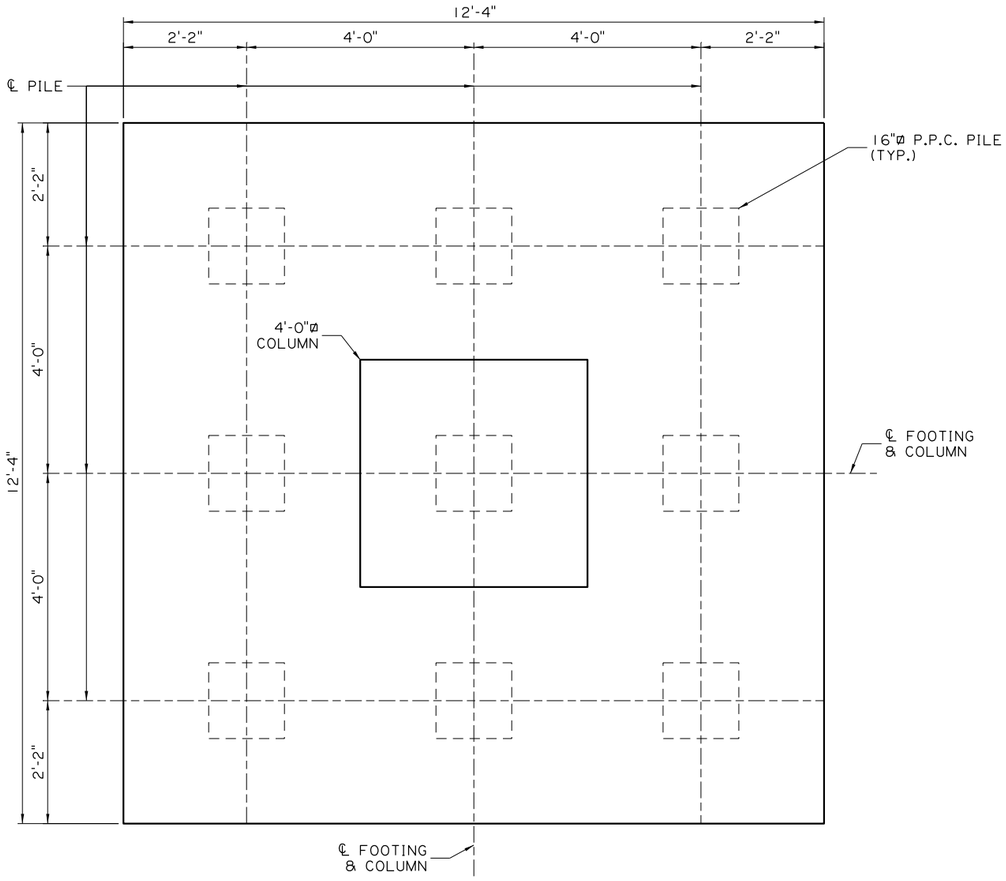

FOOTING - PLAN
(BENTS 2-4 EASTBOUND & WESTBOUND)
SCALE: ¾" = 1'-0"

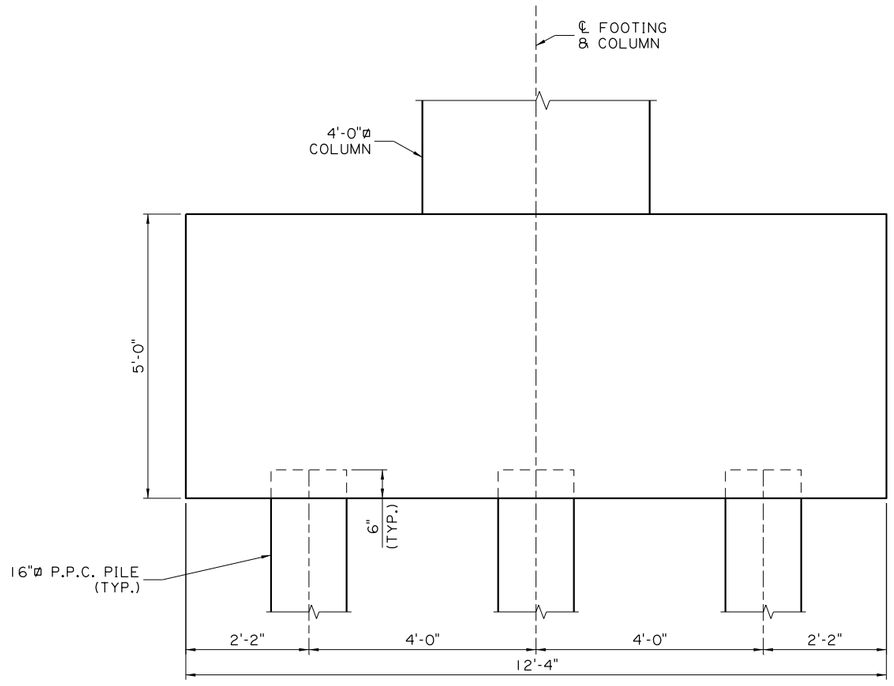

SECTION
SCALE: ¾" = 1'-0"

SHEET NUMBER	204

PARISH	CONTROL SECTION	STATE PROJECT
CALCASIEU	450-91	H.003931

DESIGN	M. HEBERT	DETAIL	K. CART	REVIEW	
CHECK	K. WERTHER	CHECK	M. HEBERT	SERIES #	1 OF 2

TECHNICAL PROPOSAL PLANS
PRELIMINARY
NOT FOR CONSTRUCTION
ENGINEER:
MATTHEW L. HEBERT
LICENSE #:
37713
DATE:
3/9/2023

NO.	DATE	REVISION OR CHANGE ORDER DESCRIPTION	BY

B-13 (LAKESHORE)
FOOTING DETAILS
BENTS 2-4 EASTBOUND & WESTBOUND

I-10 CALCASIEU RIVER BRIDGE IMPROVEMENTS

DOTD LOUISIANA DEPARTMENT OF TRANSPORTATION & DEVELOPMENT

CBP CALCASIEU BRIDGE PARTNERS

TECHNICAL PROPOSAL PLANS
3/9/2023 9:10:25 AM
S:\xdrive\HUVAL Projects\7262 (I-10 Calcasieu P3)\05 Drawings\Bridge\02 Border to Print\01-Lakeshore\Technical Proposal\9-10_Footing Details_Lakeshore.dgn

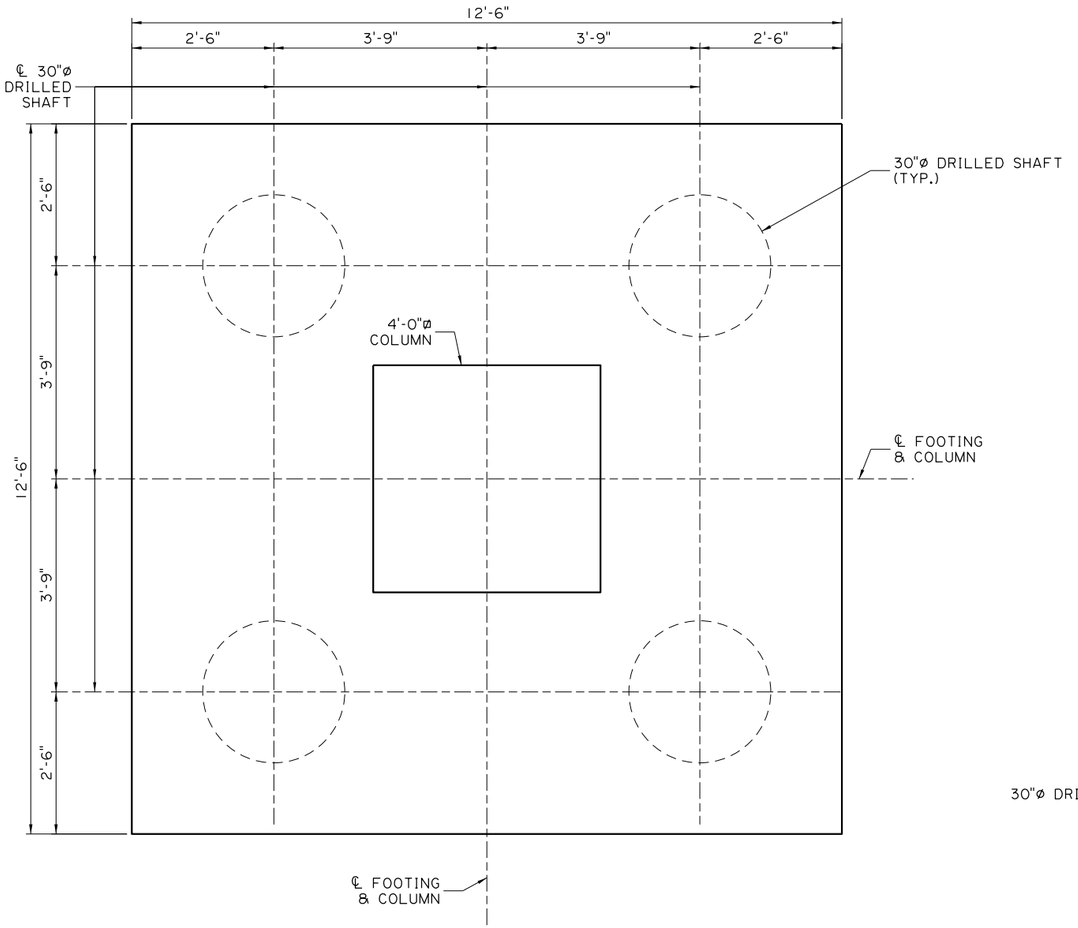

FOOTING - PLAN
(BENT 5 EASTBOUND & WESTBOUND)
SCALE: ¾" = 1'-0"

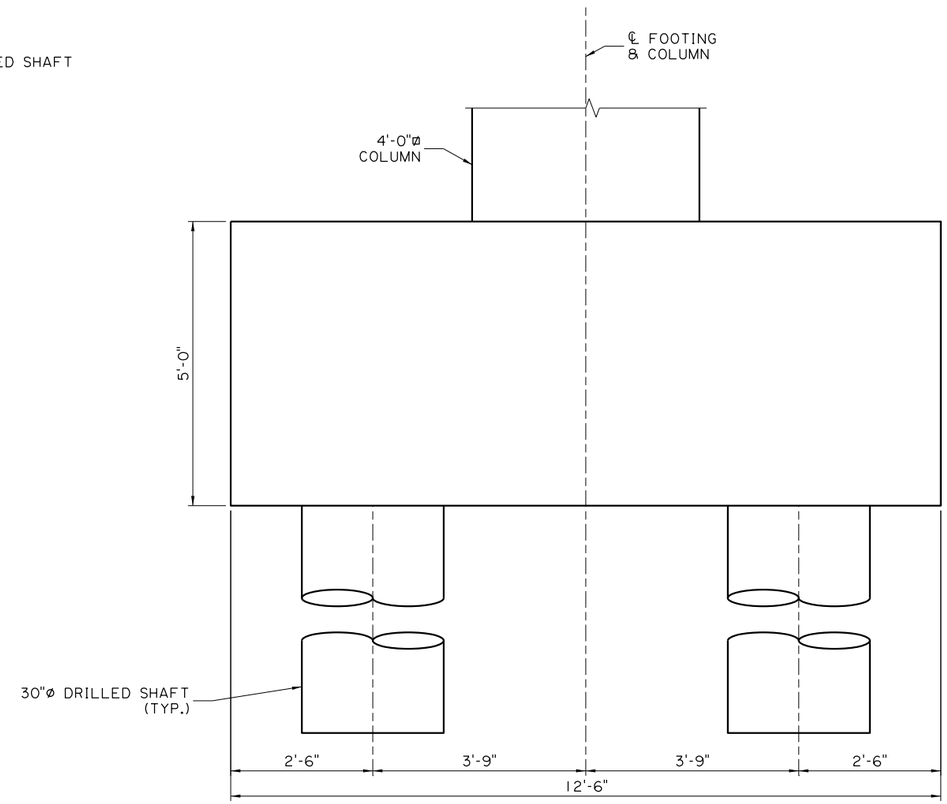

SECTION
SCALE: ¾" = 1'-0"

SHEET NUMBER	205

PARISH	CONTROL SECTION	STATE PROJECT
CALCASIEU	450-91	H.003931

DESIGN	M. HEBERT
CHECK	K. WERTHER
DETAIL	K. CART
CHECK	M. HEBERT
REVIEW	
SERIES #	2 OF 2

TECHNICAL PROPOSAL PLANS
PRELIMINARY
NOT FOR CONSTRUCTION
ENGINEER: MATTHEW L. HEBERT
LICENSE #: 37713
DATE: 3/9/2023

NO.	DATE	REVISION OR CHANGE ORDER DESCRIPTION	BY

B-13 (LAKESHORE)
FOOTING DETAILS
BENTS 2-4 EASTBOUND & WESTBOUND

I-10 CALCASIEU RIVER BRIDGE IMPROVEMENTS

DOTD LOUISIANA DEPARTMENT OF TRANSPORTATION & DEVELOPMENT

CBP CALCASIEU BRIDGE PARTNERS

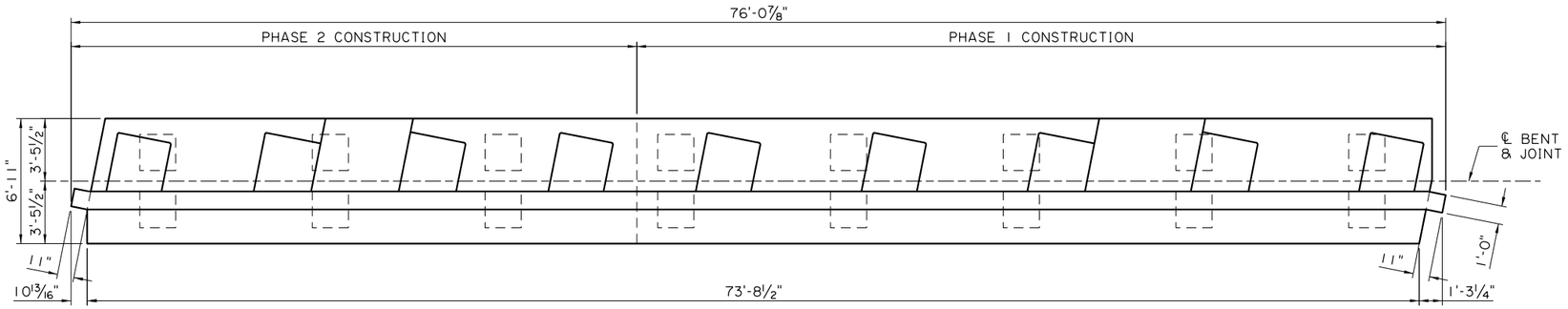

PLAN

(EASTBOUND ABUTMENT 1) (PHASED CONSTRUCTION)
SCALE: 1/4" = 1'-0"

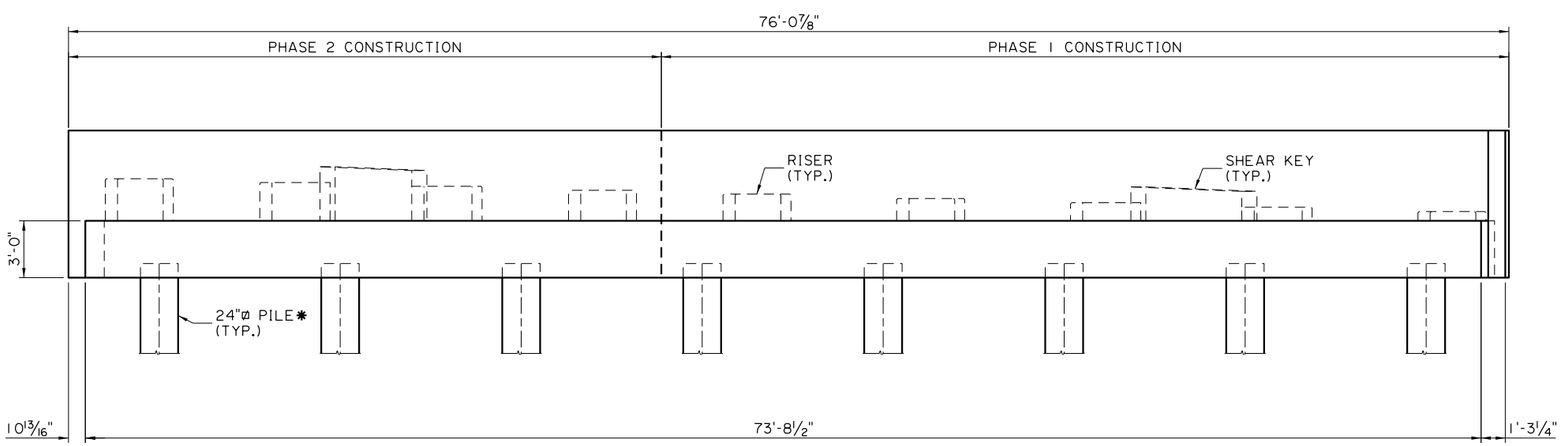

ELEVATION

(EASTBOUND ABUTMENT 1) (PHASED CONSTRUCTION)
SCALE: 1/4" = 1'-0"

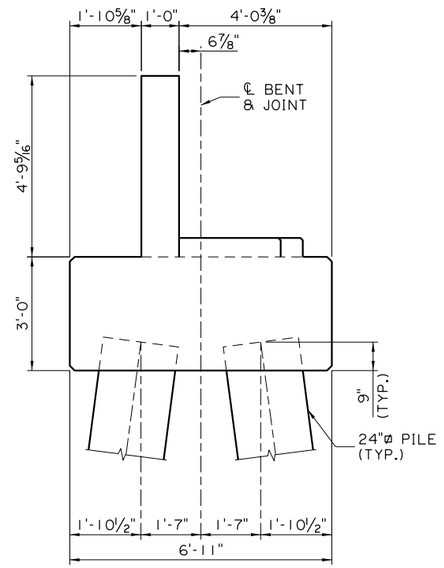

SECTION

SCALE: 1/2" = 1'-0"

TECHNICAL PROPOSAL PLANS

S:\xdrive\HUVAL Projects\7262 (I-10 Calcasieu P3)\05 Drawings\Bridge\02 Border to Print\01-Lakeshore\Technical Proposal\11_Lakeshore_Abutment 1 EB.dgn 3/9/2023 9:11:23 AM

SHEET NUMBER	206

PARISH	CONTROL SECTION	STATE PROJECT
CALCASIEU	450-91	H.003931

DESIGN	CHECK	DETAIL	CHECK	REVIEW	SERIES #
M. HEBERT	K. WERTHER	K. CART	M. HEBERT		

TECHNICAL PROPOSAL PLANS

PRELIMINARY
NOT FOR CONSTRUCTION

ENGINEER:
MATTHEW L. HEBERT

LICENSE #:
37713

DATE:
3/9/2023

NO.	DATE	REVISION OR CHANGE ORDER DESCRIPTION	BY

STATE OF LOUISIANA

B-13 (LAKESHORE)
BENT DETAILS
EASTBOUND ABUTMENT 1
(PHASED CONSTRUCTION)

I-10 CALCASIEU RIVER BRIDGE IMPROVEMENTS

DOTD
LOUISIANA DEPARTMENT OF TRANSPORTATION & DEVELOPMENT

CBP
CALCASIEU BRIDGE PARTNERS

TECHNICAL PROPOSAL PLANS
S:\xdrive\HUVAL Projects\7262 (I-10 Calcasieu P3)\05 Drawings\Bridge\02 Border to Print\01-Lakeshore\Technical Proposal\12_Lakeshore_Abutment 1 WB (1 of 2).dgn
3/9/2023 9:12:26 AM

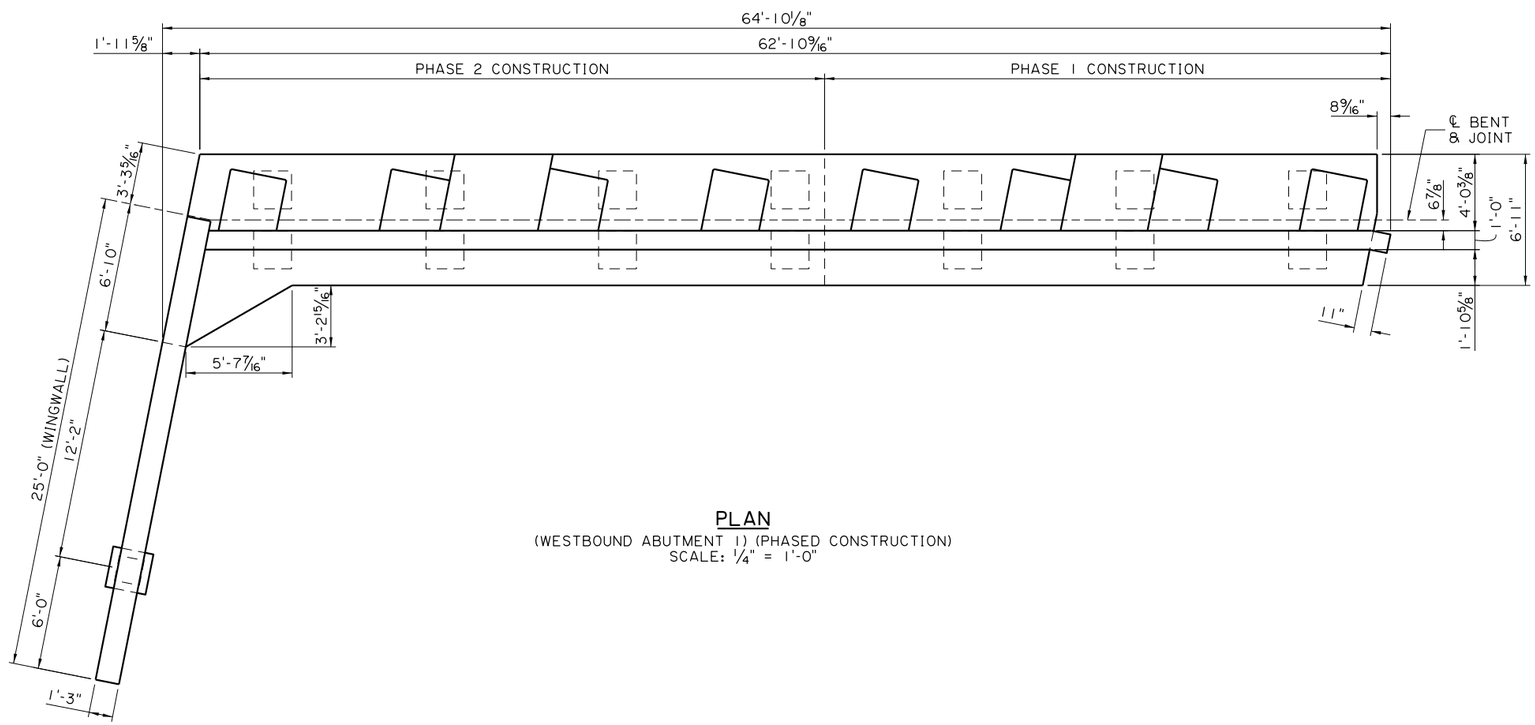

PLAN
(WESTBOUND ABUTMENT 1) (PHASED CONSTRUCTION)
SCALE: ¼" = 1'-0"

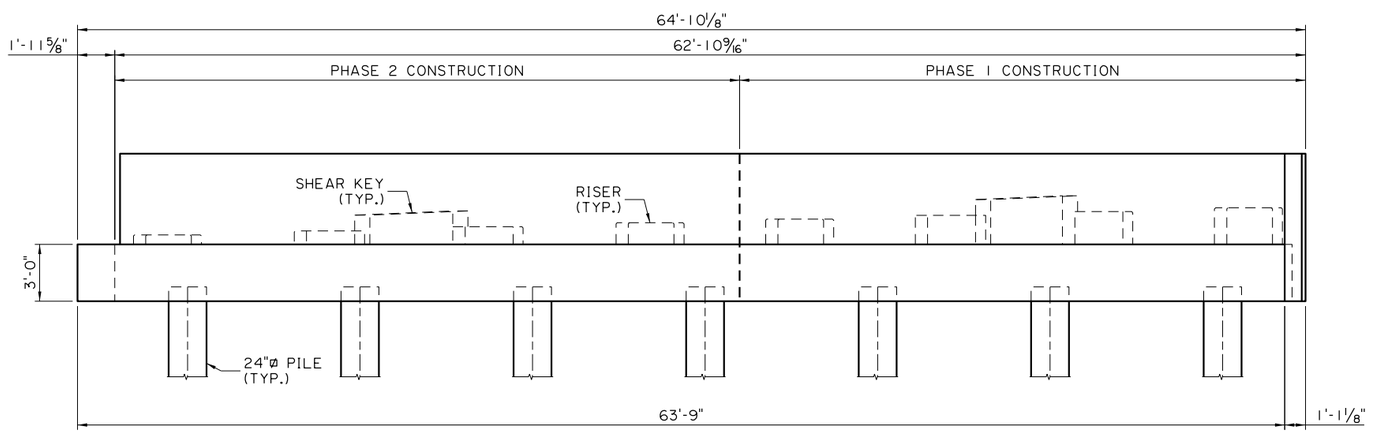

ELEVATION
(WESTBOUND ABUTMENT 1) (PHASED CONSTRUCTION)
SCALE: ¼" = 1'-0"

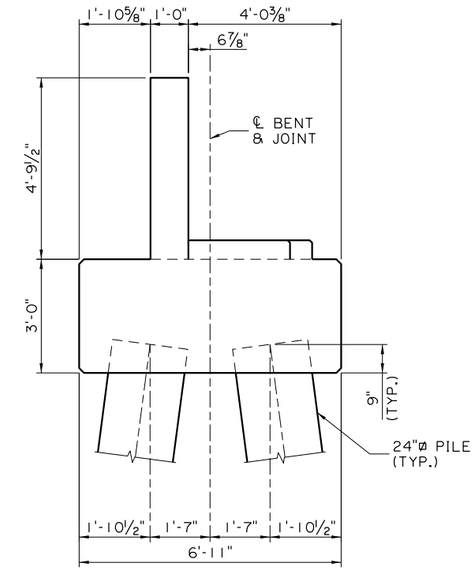

SECTION
SCALE: ½" = 1'-0"

SHEET NUMBER	207

PARISH	CONTROL SECTION	STATE PROJECT
CALCASIEU	450-91	H.003931

DESIGN	M. HEBERT
CHECK	K. WERTHER
DETAIL	K. CART
CHECK	M. HEBERT
REVIEW	
SERIES	1 OF 2

TECHNICAL PROPOSAL PLANS
PRELIMINARY
NOT FOR CONSTRUCTION
ENGINEER: MATTHEW L. HEBERT
LICENSE #: 37713
DATE: 3/9/2023

NO.	DATE	REVISION OR CHANGE ORDER DESCRIPTION	BY

B-13 (LAKESHORE)
BENT DETAILS
WESTBOUND ABUTMENT 1
(PHASED CONSTRUCTION)

I-10 CALCASIEU RIVER BRIDGE IMPROVEMENTS

DOTD LOUISIANA DEPARTMENT OF TRANSPORTATION & DEVELOPMENT
CBP CALCASIEU BRIDGE PARTNERS

TECHNICAL PROPOSAL PLANS
S:\xdrive\HUVAL Projects\7262 (I-10 Calcasieu P3)\05 Drawings\Bridge\02 Border to Print\01-Lakeshore\Technical Proposal\13_Lakeshore_Abutment 1 WB (2 of 2).dgn 3/9/2023 9:13:16 AM

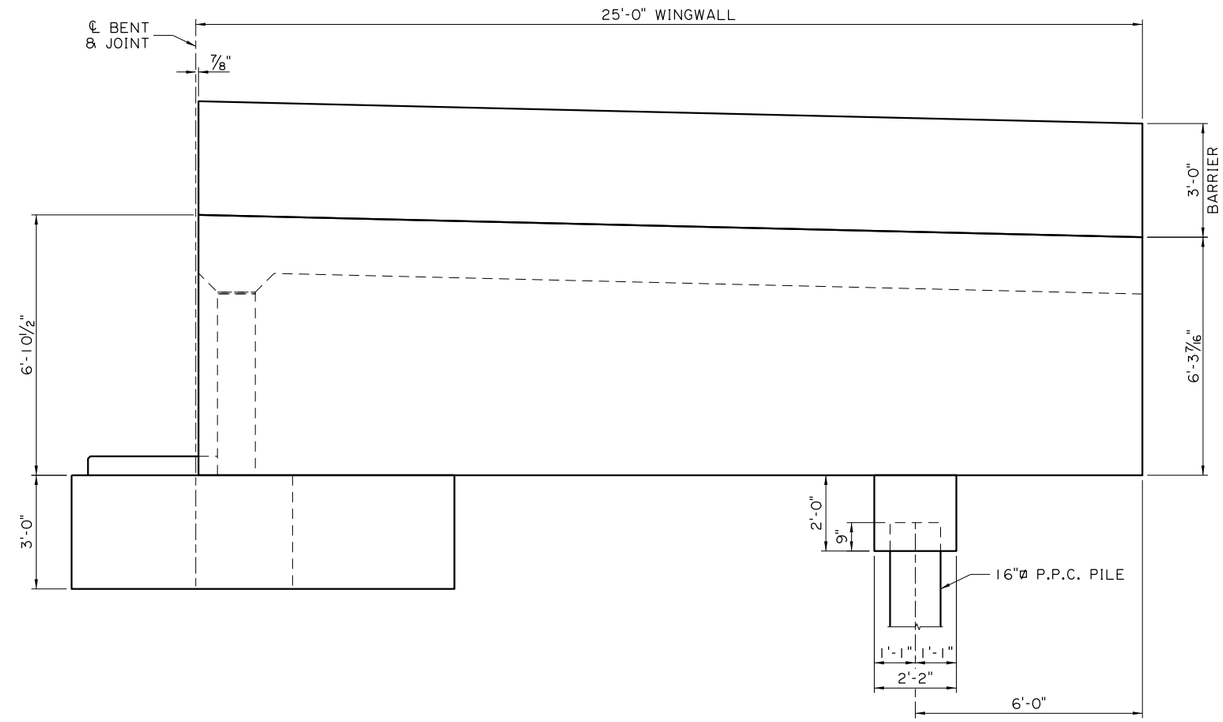

WINGWALL
SCALE: 1/2" = 1'-0"

SHEET NUMBER	208

PARISH	CONTROL SECTION	STATE PROJECT
CALCASIEU	450-91	H.003931

DESIGN	M. HEBERT	DETAIL	K. CART	REVIEW	
CHECK	K. WERTHER	CHECK	M. HEBERT	SERIES #	2 OF 2

TECHNICAL PROPOSAL PLANS
PRELIMINARY
NOT FOR CONSTRUCTION
ENGINEER:
MATTHEW L. HEBERT
LICENSE #:
37713
DATE:
3/9/2023

NO.	DATE	REVISION OR CHANGE ORDER DESCRIPTION	BY

STATE OF LOUISIANA

B-13 (LAKESHORE)
BENT DETAILS
WESTBOUND ABUTMENT 1
(PHASED CONSTRUCTION)

I-10 CALCASIEU RIVER BRIDGE IMPROVEMENTS

DOTD LOUISIANA DEPARTMENT OF TRANSPORTATION & DEVELOPMENT

CBP CALCASIEU BRIDGE PARTNERS

TECHNICAL PROPOSAL PLANS

S:\xdrive\HUVAL Projects\7262 (I-10 Calcasieu P3)\05 Drawings\Bridge\02 Border to Prin\01-Lakeshore\Technical Proposal\14_Lakeshore_Abutment 6 EB (1 of 2).dgn 3/9/2023 9:14:07 AM

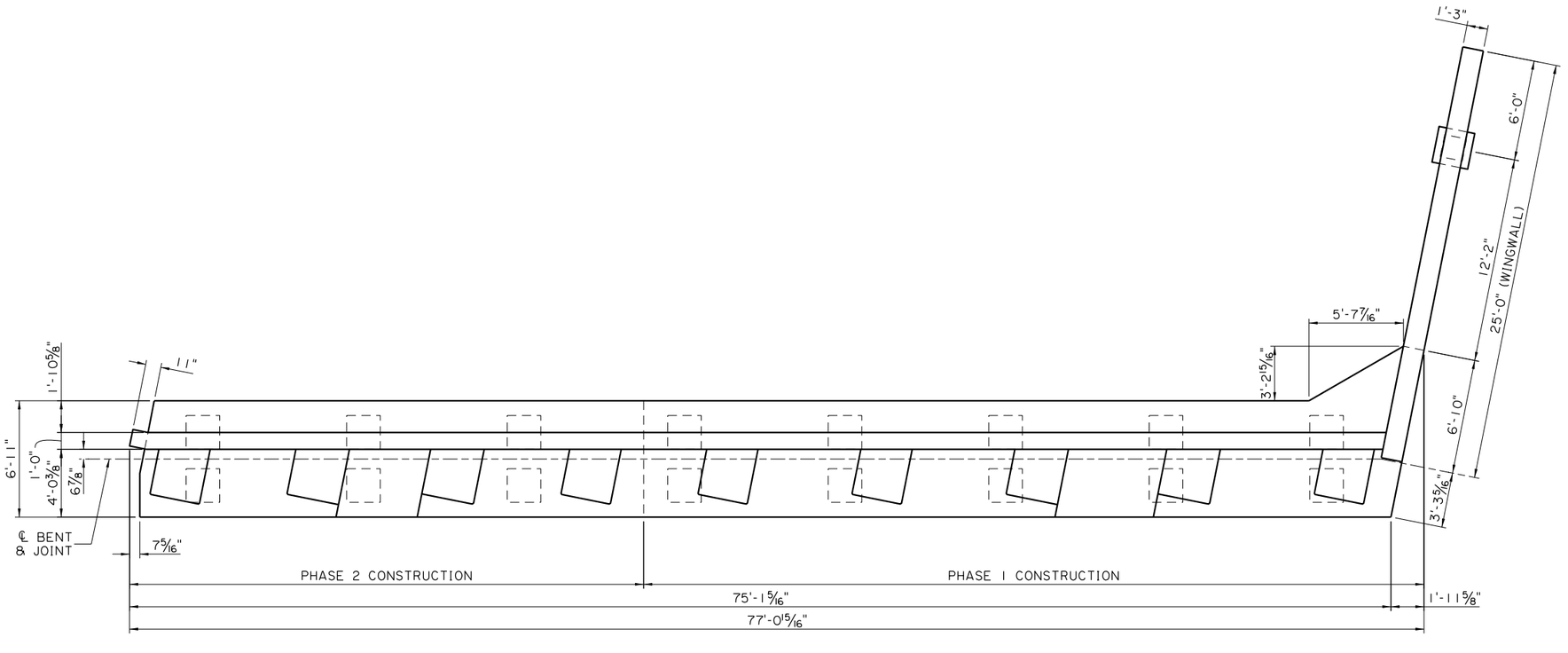

PLAN

(EASTBOUND ABUTMENT 6) (PHASED CONSTRUCTION)
SCALE: 1/4" = 1'-0"

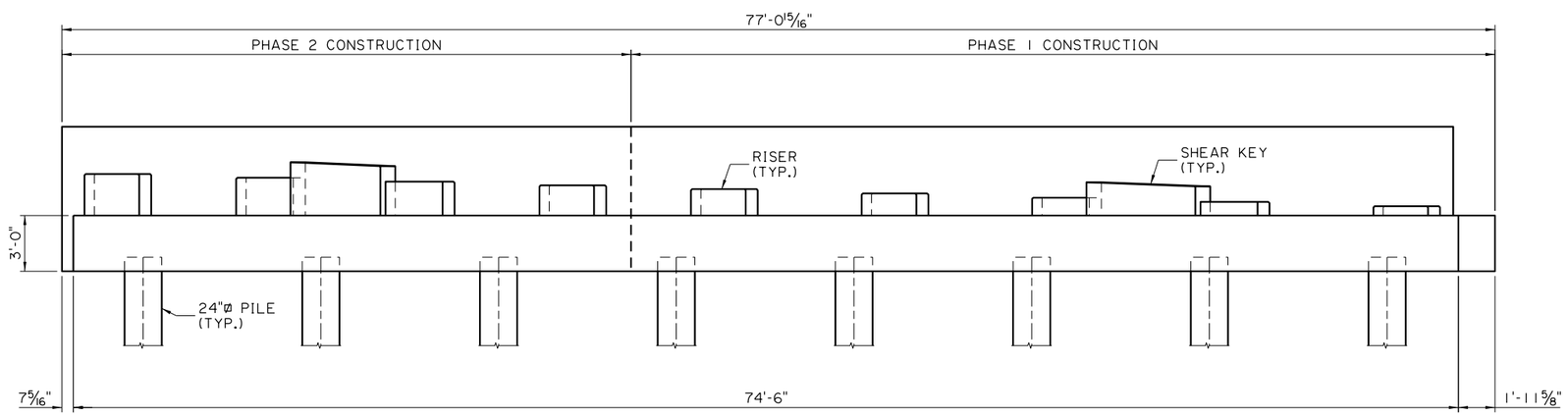

ELEVATION

(EASTBOUND ABUTMENT 6) (PHASED CONSTRUCTION)
SCALE: 1/4" = 1'-0"

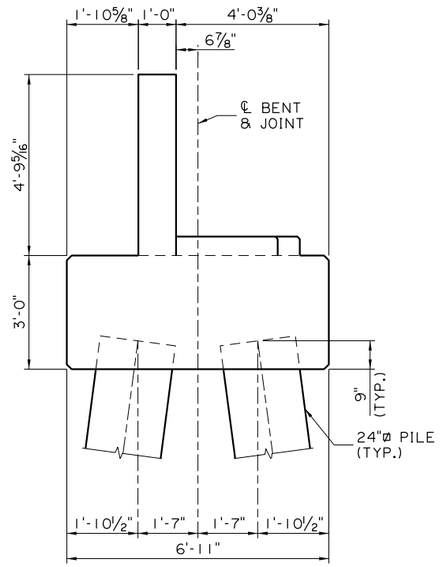

SECTION

SCALE: 1/2" = 1'-0"

SHEET NUMBER	209

PARISH	CONTROL SECTION	STATE PROJECT
CALCASIEU	450-91	H.003931

DESIGN	M. HEBERT
CHECK	K. WERTHER
DETAIL	K. CART
CHECK	M. HEBERT
REVIEW	
SERIES	1 OF 2

TECHNICAL PROPOSAL PLANS

PRELIMINARY
NOT FOR CONSTRUCTION
ENGINEER:
MATTHEW L. HEBERT

LICENSE #:
37713

DATE:
3/9/2023

NO.	DATE	REVISION OR CHANGE ORDER DESCRIPTION	BY

B-13 (LAKESHORE)
BENT DETAILS
EASTBOUND ABUTMENT 6
(PHASED CONSTRUCTION)

I-10 CALCASIEU RIVER BRIDGE IMPROVEMENTS

DOTD
LOUISIANA DEPARTMENT OF TRANSPORTATION & DEVELOPMENT

CBP
CALCASIEU BRIDGE PARTNERS

TECHNICAL PROPOSAL PLANS
S:\xdrive\HUVAL Projects\7262 (I-10 Calcasieu P3)\05 Drawings\Bridge\02 Border to Print\01-Lakeshore\Technical Proposal\15_Lakeshore_Abutment 6 EB (2 of 2).dgn 3/9/2023 9:14:47 AM

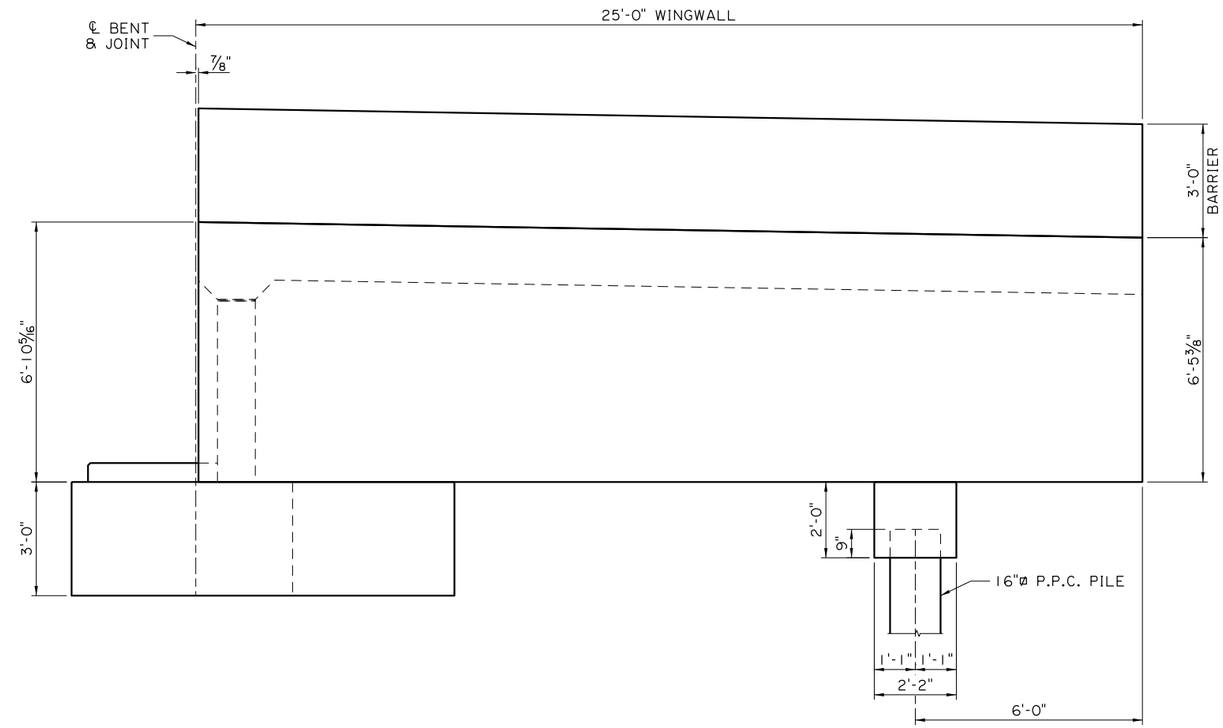

WINGWALL
SCALE: 1/2" = 1'-0"

SHEET NUMBER	210

PARISH	CONTROL SECTION	STATE PROJECT
CALCASIEU	450-91	H.003931

DESIGN	M. HEBERT	DETAIL	K. CART	REVIEW	
CHECK	K. WERTHER	CHECK	M. HEBERT	SERIES #	2 OF 2

TECHNICAL PROPOSAL PLANS
PRELIMINARY
NOT FOR CONSTRUCTION
ENGINEER:
MATTHEW L. HEBERT
LICENSE #:
37713
DATE:
3/9/2023

NO.	DATE	REVISION OR CHANGE ORDER DESCRIPTION	BY

B-13 (LAKESHORE)
BENT DETAILS
EASTBOUND ABUTMENT 6
(PHASED CONSTRUCTION)

I-10 CALCASIEU RIVER BRIDGE IMPROVEMENTS

DOTD LOUISIANA DEPARTMENT OF TRANSPORTATION & DEVELOPMENT

CBP CALCASIEU BRIDGE PARTNERS

TECHNICAL PROPOSAL PLANS
3/9/2023 9:15:44 AM
S:\xdrive\HUVAL Projects\7262 (I-10 Calcasieu P3)\05 Drawings\Bridge\02 Border to Print\01-Lakeshore\Technical Proposal\16_Lakeshore_Abutment 6 WB (1 of 2).dgn

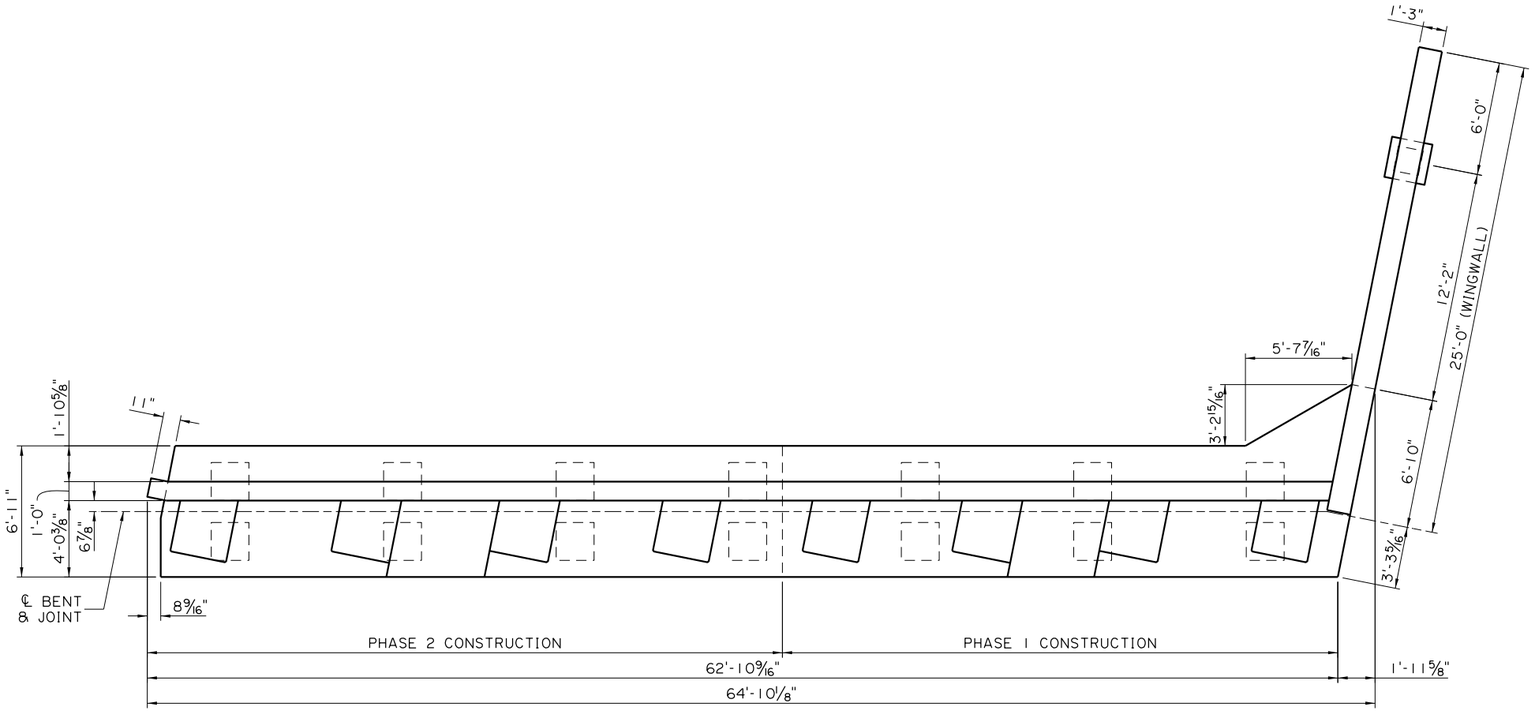

PLAN
(WESTBOUND ABUTMENT 6) (PHASED CONSTRUCTION)
SCALE: 1/4" = 1'-0"

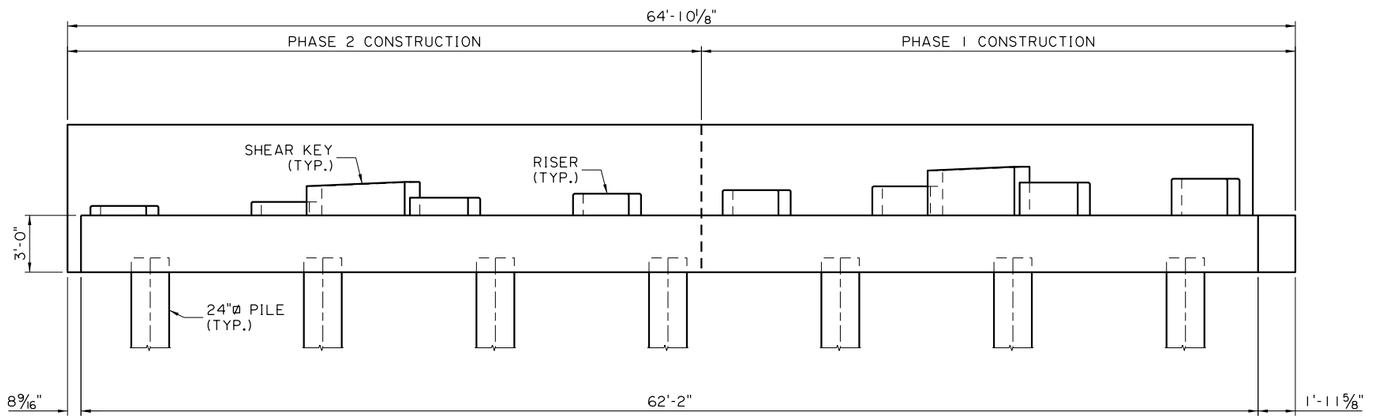

ELEVATION
(WESTBOUND ABUTMENT 6) (PHASED CONSTRUCTION)
SCALE: 1/4" = 1'-0"

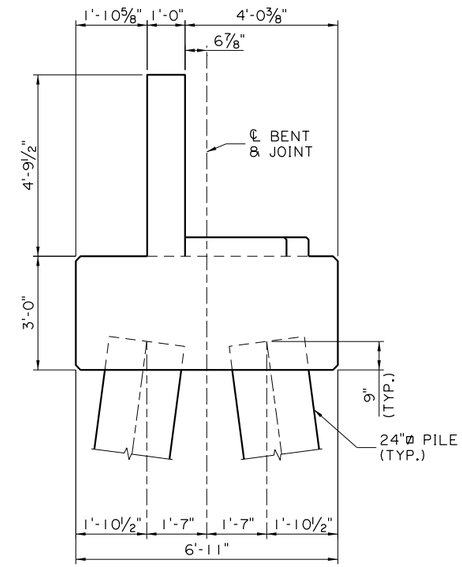

SECTION
SCALE: 1/2" = 1'-0"

SHEET NUMBER	211		
PARISH	CALCASIEU	CONTROL SECTION	450-91
		STATE PROJECT	H.003931
DESIGN	M. HEBERT	DETAIL	K. CART
CHECK	K. WERTHER	CHECK	M. HEBERT
		REVIEW	
		SERIES	1 OF 2

TECHNICAL PROPOSAL PLANS
PRELIMINARY
NOT FOR CONSTRUCTION
ENGINEER: MATTHEW L. HEBERT
LICENSE #: 37713
DATE: 3/9/2023

NO.	DATE	REVISION OR CHANGE ORDER DESCRIPTION	BY

B-13 (LAKESHORE)
BENT DETAILS
WESTBOUND ABUTMENT 6
(PHASED CONSTRUCTION)

I-10 CALCASIEU RIVER BRIDGE IMPROVEMENTS

DOTD LOUISIANA DEPARTMENT OF TRANSPORTATION & DEVELOPMENT
CBP CALCASIEU BRIDGE PARTNERS

TECHNICAL PROPOSAL PLANS
S:\xdrive\HUVAL Projects\7262 (I-10 Calcasieu P3)\05 Drawings\Bridge\02 Border to Print\01-Lakeshore\Technical Proposal\17_Lakeshore_Abutment 6 WB (2 of 2).dgn
3/9/2023 9:16:27 AM

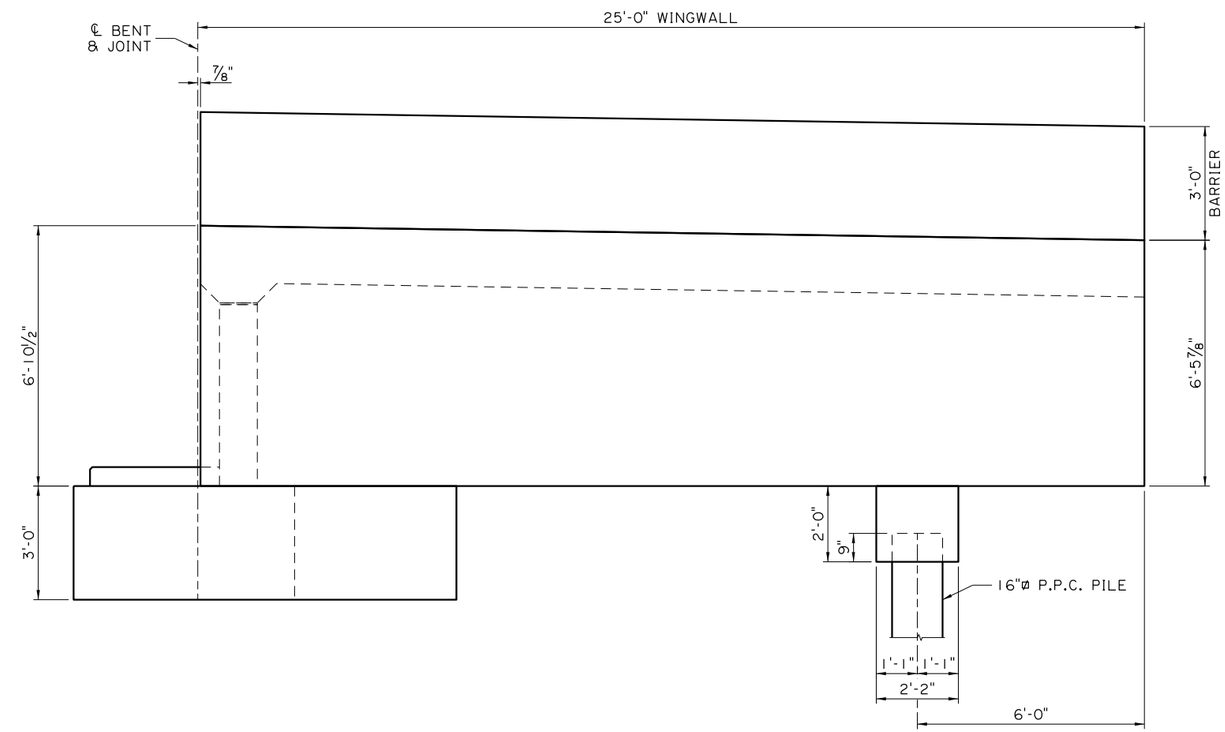

WINGWALL
SCALE: ½" = 1'-0"

SHEET NUMBER	212
PARISH: CALCASIEU	CONTROL SECTION: 450-91	STATE PROJECT: H.003931
DESIGN: M. HEBERT	CHECK: K. WERTHER	DETAIL: K. CART	CHECK: M. HEBERT	REVIEW	SERIES • 2 OF 2

TECHNICAL PROPOSAL PLANS
PRELIMINARY
NOT FOR CONSTRUCTION
ENGINEER: MATTHEW L. HEBERT
LICENSE #: 37713
DATE: 3/9/2023

NO.	DATE	REVISION OR CHANGE ORDER DESCRIPTION	BY

B-13 (LAKESHORE)
BENT DETAILS
WESTBOUND ABUTMENT 6
(PHASED CONSTRUCTION)

I-10 CALCASIEU RIVER BRIDGE IMPROVEMENTS

DOTD LOUISIANA DEPARTMENT OF TRANSPORTATION & DEVELOPMENT
CBP CALCASIEU BRIDGE PARTNERS

TECHNICAL PROPOSAL PLANS
S:\xdrive\HUVAL Projects\7262 (I-10 Calcasieu P3)\05 Drawings\Bridge\02 Border to Print\01-Lakeshore\Technical Proposal\18_Lakeshore _Column Bent Details EB.dgn 3/9/2023 9:17:46 AM

BENT NO.	NO. OF COLUMNS	LENGTH OF COLUMNS
2 (EB)	4	18'-0"
3 (EB)	4	18'-0"
4 (EB)	4	18'-0"
5 (EB)	4	18'-0"

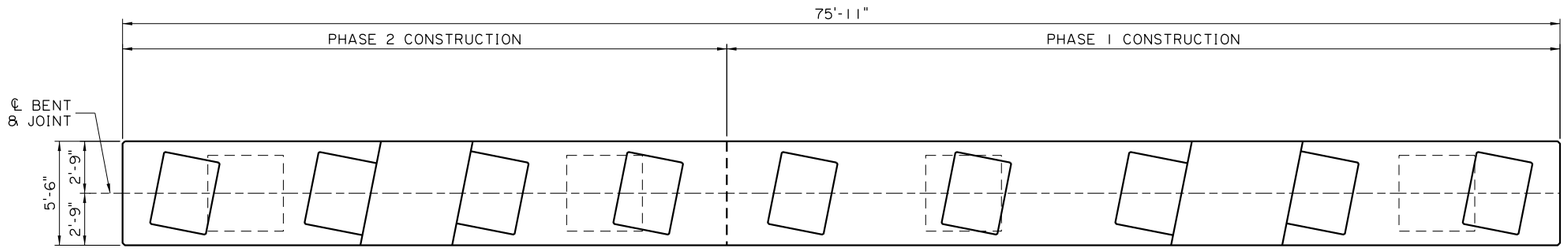

PLAN
(EASTBOUND BENTS 2-5) (PHASED CONSTRUCTION)
SCALE: 1/4" = 1'-0"

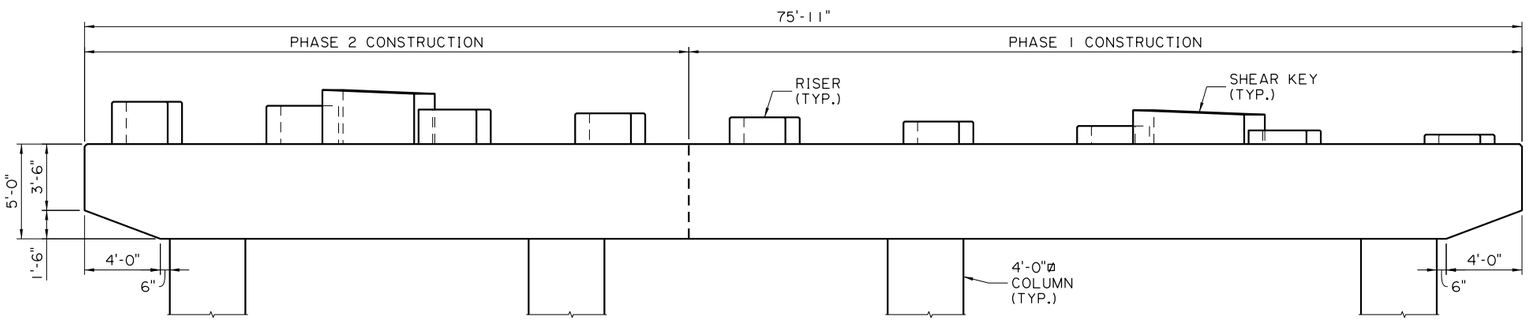

ELEVATION
(EASTBOUND BENTS 2-5) (PHASED CONSTRUCTION)
SCALE: 1/4" = 1'-0"

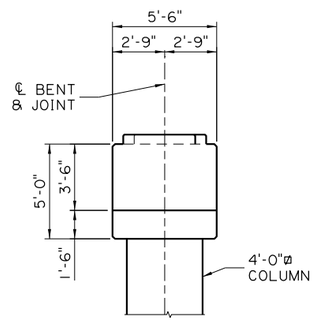

SECTION
SCALE: 1/4" = 1'-0"

SHEET NUMBER 213

PARISH	CONTROL SECTION	STATE PROJECT
CALCASIEU	450-91	H.003931

DESIGN	CHECK	DETAIL	CHECK	REVIEW	SERIES #
M. HEBERT	K. WERTHER	K. CART	M. HEBERT		

TECHNICAL PROPOSAL PLANS
PRELIMINARY
NOT FOR CONSTRUCTION
ENGINEER:
MATTHEW L. HEBERT
LICENSE #:
37713
DATE:
3/9/2023

NO.	DATE	REVISION OR CHANGE ORDER DESCRIPTION	BY

B-13 (LAKESHORE)
COLUMN BENT DETAILS
EASTBOUND BENTS 2-5
(PHASED CONSTRUCTION)

I-10 CALCASIEU RIVER BRIDGE IMPROVEMENTS

LOUISIANA DEPARTMENT OF TRANSPORTATION & DEVELOPMENT

CALCASIEU BRIDGE PARTNERS

BENT NO.	NO. OF COLUMNS	LENGTH OF COLUMNS
2 (WB)	4	18'-0"
3 (WB)	4	18'-0"
4 (WB)	4	18'-0"
5 (WB)	4	18'-0"

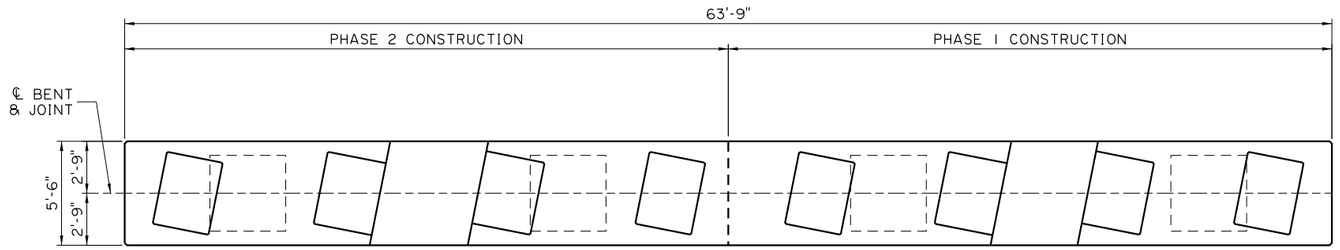

PLAN
(WESTBOUND BENTS 2-5) (PHASED CONSTRUCTION)
SCALE: 1/4" = 1'-0"

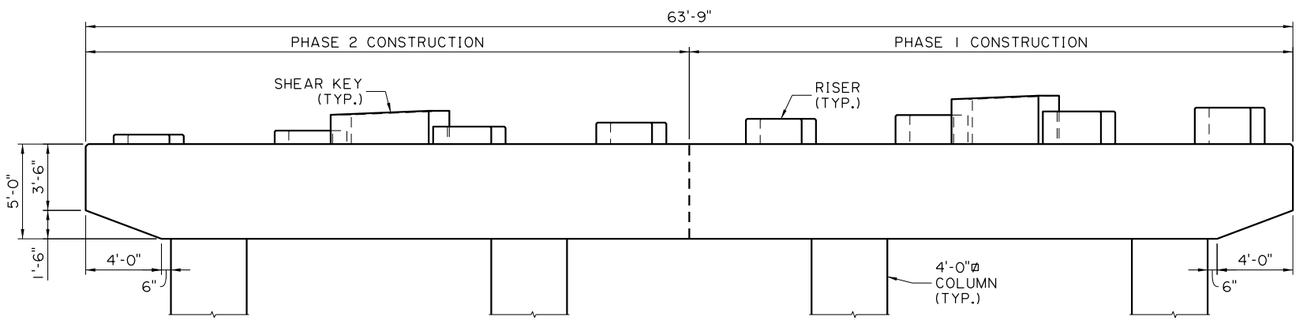

ELEVATION
(WESTBOUND BENTS 2-5) (PHASED CONSTRUCTION)
SCALE: 1/4" = 1'-0"

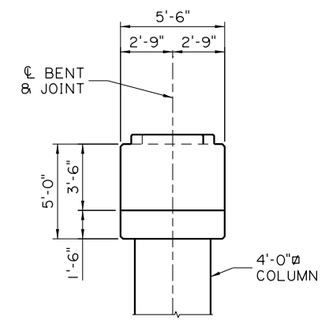

SECTION
SCALE: 1/4" = 1'-0"

TECHNICAL PROPOSAL PLANS

S:\xdrive\HUVAL Projects\7262 (I-10 Calcasieu P3)\05 Drawings\Bridge\02 Border to Print\01-Lakeshore\Technical Proposal\19_Lakeshore _Column Bent Details WB.dgn 3/9/2023 9:18:35 AM

SHEET NUMBER 214

PARISH	CONTROL SECTION	STATE PROJECT
CALCASIEU	450-91	H.003931

DESIGN	CHECK	DETAIL	CHECK	REVIEW	SERIES #
M. HEBERT	K. WERTHER	K. CART	M. HEBERT		

TECHNICAL PROPOSAL PLANS
PRELIMINARY
NOT FOR CONSTRUCTION
ENGINEER:
MATTHEW L. HEBERT
LICENSE #:
37713
DATE:
3/9/2023

NO.	DATE	REVISION OR CHANGE ORDER DESCRIPTION	BY

B-13 (LAKESHORE)
COLUMN BENT DETAILS
WESTBOUND BENTS 2-5
(PHASED CONSTRUCTION)

I-10 CALCASIEU RIVER BRIDGE IMPROVEMENTS

LOUISIANA DEPARTMENT OF TRANSPORTATION & DEVELOPMENT

CALCASIEU BRIDGE PARTNERS

GIRDER DATA TABLE - LAKESHORE WESTBOUND

SPAN NO.	GIRDER DESIGNATION	GIRDER TYPE	CONCRETE CLASS	COMP. STRENGTH @ 28 DAYS (KSI)	COMP. STRENGTH @ RELEASE (KSI)	LG (FT.)	SL (+% OR -%)	P (FT.)	STRAND PATTERN ⊕	DL REACTIONS (KIP)	Y (IN.)	SHEAR REINFORCEMENT BAR 501								END A												END B											
												ZONE 1		ZONE 2		ZONE 3		ZONE 4		Θ (DEGREE)	X (IN.) △	J (IN.)	K (IN.)	CLIPPED TOP FLANGE (Y/N)	CLIPPED BOTTOM FLANGE (Y/N)	BEARING PAD TYPE	EMBEDDED PL "A" LP (IN.)	EMBEDDED PL "B" AND BEVELED PL LP (IN.)	LPC (IN.)	BEVELED PL T (IN.)	Θ (DEGREE)	X (IN.) △	J (IN.)	K (IN.)	CLIPPED TOP FLANGE (Y/N)	CLIPPED BOTTOM FLANGE (Y/N)	BEARING PAD TYPE	EMBEDDED PL "A" LP (IN.)	EMBEDDED PL "B" AND BEVELED PL LP (IN.)	LPC (IN.)	BEVELED PL T (IN.)
												N1	V1 (IN.) ✱	N2	V2 (IN.) ✱	N3	V3 (IN.) ✱	N4	V4 (IN.) ✱																						
1	1-A	LG-63	P3	10	7.50	119.42	-	-	-	-	5	-	-	-	-	-	-	-	-	-	3.50	-	-	-	-	B5	-	-	-	-	-	3.50	-	-	-	-	B5	-	-	-	-
1	1-B	LG-63	P3	10	7.50	119.42	-	-	-	-	5	-	-	-	-	-	-	-	-	-	3.50	-	-	-	-	B5	-	-	-	-	-	3.50	-	-	-	-	B5	-	-	-	-
1	1-C	LG-63	P3	10	7.50	119.42	-	-	-	-	5	-	-	-	-	-	-	-	-	-	3.50	-	-	-	-	B5	-	-	-	-	-	3.50	-	-	-	-	B5	-	-	-	-
1	1-D	LG-63	P3	10	7.50	119.42	-	-	-	-	5	-	-	-	-	-	-	-	-	-	3.50	-	-	-	-	B5	-	-	-	-	-	3.50	-	-	-	-	B5	-	-	-	-
1	1-E	LG-63	P3	10	7.50	119.42	-	-	-	-	5	-	-	-	-	-	-	-	-	-	3.50	-	-	-	-	B5	-	-	-	-	-	3.50	-	-	-	-	B5	-	-	-	-
1	1-F	LG-63	P3	10	7.50	119.42	-	-	-	-	5	-	-	-	-	-	-	-	-	-	3.50	-	-	-	-	B5	-	-	-	-	-	3.50	-	-	-	-	B5	-	-	-	-
1	1-G	LG-63	P3	10	7.50	119.42	-	-	-	-	5	-	-	-	-	-	-	-	-	-	3.50	-	-	-	-	B5	-	-	-	-	-	3.50	-	-	-	-	B5	-	-	-	-
1	1-H	LG-63	P3	10	7.50	119.42	-	-	-	-	5	-	-	-	-	-	-	-	-	-	3.50	-	-	-	-	B5	-	-	-	-	-	3.50	-	-	-	-	B5	-	-	-	-
2	2-A	LG-63	P3	10	7.50	95.42	-	-	-	-	5	-	-	-	-	-	-	-	-	-	3.50	-	-	-	-	B5	-	-	-	-	-	3.50	-	-	-	-	B5	-	-	-	-
2	2-B	LG-63	P3	10	7.50	95.42	-	-	-	-	5	-	-	-	-	-	-	-	-	-	3.50	-	-	-	-	B5	-	-	-	-	-	3.50	-	-	-	-	B5	-	-	-	-
2	2-C	LG-63	P3	10	7.50	95.42	-	-	-	-	5	-	-	-	-	-	-	-	-	-	3.50	-	-	-	-	B5	-	-	-	-	-	3.50	-	-	-	-	B5	-	-	-	-
2	2-D	LG-63	P3	10	7.50	95.42	-	-	-	-	5	-	-	-	-	-	-	-	-	-	3.50	-	-	-	-	B5	-	-	-	-	-	3.50	-	-	-	-	B5	-	-	-	-
2	2-E	LG-63	P3	10	7.50	95.42	-	-	-	-	5	-	-	-	-	-	-	-	-	-	3.50	-	-	-	-	B5	-	-	-	-	-	3.50	-	-	-	-	B5	-	-	-	-
2	2-F	LG-63	P3	10	7.50	95.42	-	-	-	-	5	-	-	-	-	-	-	-	-	-	3.50	-	-	-	-	B5	-	-	-	-	-	3.50	-	-	-	-	B5	-	-	-	-
2	2-G	LG-63	P3	10	7.50	95.42	-	-	-	-	5	-	-	-	-	-	-	-	-	-	3.50	-	-	-	-	B5	-	-	-	-	-	3.50	-	-	-	-	B5	-	-	-	-
2	2-H	LG-63	P3	10	7.50	95.42	-	-	-	-	5	-	-	-	-	-	-	-	-	-	3.50	-	-	-	-	B5	-	-	-	-	-	3.50	-	-	-	-	B5	-	-	-	-
3	3-A	LG-63	P3	10	7.50	119.42	-	-	-	-	5	-	-	-	-	-	-	-	-	-	3.50	-	-	-	-	B5	-	-	-	-	-	3.50	-	-	-	-	B5	-	-	-	-
3	3-B	LG-63	P3	10	7.50	119.42	-	-	-	-	5	-	-	-	-	-	-	-	-	-	3.50	-	-	-	-	B5	-	-	-	-	-	3.50	-	-	-	-	B5	-	-	-	-
3	3-C	LG-63	P3	10	7.50	119.42	-	-	-	-	5	-	-	-	-	-	-	-	-	-	3.50	-	-	-	-	B5	-	-	-	-	-	3.50	-	-	-	-	B5	-	-	-	-
3	3-D	LG-63	P3	10	7.50	119.42	-	-	-	-	5	-	-	-	-	-	-	-	-	-	3.50	-	-	-	-	B5	-	-	-	-	-	3.50	-	-	-	-	B5	-	-	-	-
3	3-E	LG-63	P3	10	7.50	119.42	-	-	-	-	5	-	-	-	-	-	-	-	-	-	3.50	-	-	-	-	B5	-	-	-	-	-	3.50	-	-	-	-	B5	-	-	-	-
3	3-F	LG-63	P3	10	7.50	119.42	-	-	-	-	5	-	-	-	-	-	-	-	-	-	3.50	-	-	-	-	B5	-	-	-	-	-	3.50	-	-	-	-	B5	-	-	-	-
3	3-G	LG-63	P3	10	7.50	119.42	-	-	-	-	5	-	-	-	-	-	-	-	-	-	3.50	-	-	-	-	B5	-	-	-	-	-	3.50	-	-	-	-	B5	-	-	-	-
3	3-H	LG-63	P3	10	7.50	119.42	-	-	-	-	5	-	-	-	-	-	-	-	-	-	3.50	-	-	-	-	B5	-	-	-	-	-	3.50	-	-	-	-	B5	-	-	-	-
4	4-A	LG-63	P3	10	7.50	126.56	-	-	-	-	5	-	-	-	-	-	-	-	-	-	3.50	-	-	-	-	B5	-	-	-	-	-	3.50	-	-	-	-	B5	-	-	-	-
4	4-B	LG-63	P3	10	7.50	126.56	-	-	-	-	5	-	-	-	-	-	-	-	-	-	3.50	-	-	-	-	B5	-	-	-	-	-	3.50	-	-	-	-	B5	-	-	-	-
4	4-C	LG-63	P3	10	7.50	126.56	-	-	-	-	5	-	-	-	-	-	-	-	-	-	3.50	-	-	-	-	B5	-	-	-	-	-	3.50	-	-	-	-	B5	-	-	-	-
4	4-D	LG-63	P3	10	7.50	126.56	-	-	-	-	5	-	-	-	-	-	-	-	-	-	3.50	-	-	-	-	B5	-	-	-	-	-	3.50	-	-	-	-	B5	-	-	-	-
4	4-E	LG-63	P3	10	7.50	126.56	-	-	-	-	5	-	-	-	-	-	-	-	-	-	3.50	-	-	-	-	B5	-	-	-	-	-	3.50	-	-	-	-	B5	-	-	-	-
4	4-F	LG-63	P3	10	7.50	126.56	-	-	-	-	5	-	-	-	-	-	-	-	-	-	3.50	-	-	-	-	B5	-	-	-	-	-	3.50	-	-	-	-	B5	-	-	-	-
4	4-G	LG-63	P3	10	7.50	126.56	-	-	-	-	5	-	-	-	-	-	-	-	-	-	3.50	-	-	-	-	B5	-	-	-	-	-	3.50	-	-	-	-	B5	-	-	-	-
4	4-H	LG-63	P3	10	7.50	126.56	-	-	-	-	5	-	-	-	-	-	-	-	-	-	3.50	-	-	-	-	B5	-	-	-	-	-	3.50	-	-	-	-	B5	-	-	-	-
5	5-A	LG-63	P3	10	7.50	100.28	-	-	-	-	5	-	-	-	-	-	-	-	-	-	3.50	-	-	-	-	B5	-	-	-	-	-	3.50	-	-	-	-	B5	-	-	-	-
5	5-B	LG-63	P3	10	7.50	100.28	-	-	-	-	5	-	-	-	-	-	-	-	-	-	3.50	-	-	-	-	B5	-	-	-	-	-	3.50	-	-	-	-	B5	-	-	-	-
5	5-C	LG-63	P3	10	7.50	100.28	-	-	-	-	5	-	-	-	-	-	-	-	-	-	3.50	-	-	-	-	B5	-	-	-	-	-	3.50	-	-	-	-	B5	-	-	-	-
5	5-D	LG-63	P3	10	7.50	100.28	-	-	-	-	5	-	-	-	-	-	-	-	-	-	3.50	-	-	-	-	B5	-	-	-	-	-	3.50	-	-	-	-	B5	-	-	-	-
5	5-E	LG-63	P3	10	7.50	100.28	-	-	-	-	5	-	-	-	-	-	-	-	-	-	3.50	-	-	-	-	B5	-	-	-	-	-	3.50	-	-	-	-	B5	-	-	-	-
5	5-F	LG-63	P3	10	7.50	100.28	-	-	-	-	5	-	-	-	-	-	-	-	-	-	3.50	-	-	-	-	B5	-	-	-	-	-	3.50	-	-	-	-	B5	-	-	-	-
5	5-G	LG-63	P3	10	7.50	100.28	-	-	-	-	5	-	-	-	-	-	-	-	-	-	3.50	-	-	-	-	B5	-	-	-	-	-	3.50	-	-	-	-	B5	-	-	-	-
5	5-H	LG-63	P3	10	7.50	100.28	-	-	-	-	5	-	-	-	-	-	-	-	-	-	3.50	-	-	-	-	B5	-	-	-	-	-	3.50	-	-	-	-	B5	-	-	-	-

NOTES:

SEE LG COMMON DETAILS AND SPECIFIC DETAILS FOR DEFINITIONS, DETAILS AND INSTRUCTIONS.

△ DETERMINATION OF "X" DIMENSION FOR GIRDERS AT SKEWED EXPANSION JOINTS MUST BE DONE ASSUMING THE JOINT IS OPEN TO △max. SEE LG COMMON DETAILS SHT. 1 OF 11 FOR DEFINITION OF △max AND SHT. 3 OF 11 FOR DETAILS OF GIRDERS AT SKEWED EXPANSION JOINTS.

AT LOCATION OF SCUPPERS, GIRDER STIRRUPS WILL HAVE TO CHANGE. (REPLACE LONG WITH SHORT.)

✱ V1, V2, V3 & V4 REPRESENT MAX. SPACING IN ZONES.

⊕ FOR ESTIMATING PURPOSES USE 64 - $^{6}/_{10}$ ø LOW LAX STRANDS. THIS IS THE MAXIMUM ALLOWED NUMBER OF STRANDS ALLOWED BY THE BDEM.

TECHNICAL PROPOSAL PLANS
S:\xdrive\HUVAL Projects\7262 (I-10 Calcasieu P3)\05 Drawings\Bridge\02 Border to Print\01-Lakeshore\Technical Proposal\20-21_Girder Details_Lakeshore.dgn 3/9/2023 9:19:54 AM

PARISH: CALCASIEU | CONTROL SECTION: 450-91 | STATE PROJECT: H.003931

DESIGN: M. HEBERT | CHECK: K. WERTHER | DETAIL: K. CART | CHECK: M. HEBERT | REVIEW: | SERIES: 1 OF 2

TECHNICAL PROPOSAL PLANS
PRELIMINARY
NOT FOR CONSTRUCTION
ENGINEER:
MATTHEW L. HEBERT
LICENSE #: 37713
DATE: 3/9/2023

NO.	DATE	REVISION OR CHANGE ORDER DESCRIPTION	BY

B-13 (LAKESHORE)
GIRDER DATA TABLE
WESTBOUND

I-10 CALCASIEU RIVER BRIDGE IMPROVEMENTS

DOTD LOUISIANA DEPARTMENT OF TRANSPORTATION & DEVELOPMENT

CBP CALCASIEU BRIDGE PARTNERS

GIRDER DATA TABLE - LAKESHORE EASTBOUND

SPAN NO.	GIRDER DESIGNATION	GIRDER TYPE	CONCRETE CLASS	COMP. STRENGTH @ 28 DAYS (KSI)	COMP. STRENGTH @ RELEASE (KSI)	LG (FT.)	SL (+% OR -%)	P (FT.)	STRAND PATTERN ⊕	DL REACTIONS (KIP)	Y (IN.)	SHEAR REINFORCEMENT BAR 501								END A												END B									
												ZONE 1		ZONE 2		ZONE 3		ZONE 4		Θ (DEGREE)	X (IN.) △	J (IN.)	K (IN.)	CLIPPED TOP FLANGE (Y/N)	CLIPPED BOTTOM FLANGE (Y/N)	BEARING PAD TYPE	EMBEDDED PL "A" LP (IN.)	EMBEDDED PL "B" AND BEVELED PL LP (IN.)	LPC (IN.)	BEVELED PL T (IN.)	Θ (DEGREE)	X (IN.) △	J (IN.)	K (IN.)	CLIPPED TOP FLANGE (Y/N)	CLIPPED BOTTOM FLANGE (Y/N)	BEARING PAD TYPE	EMBEDDED PL "A" LP (IN.)	EMBEDDED PL "B" AND BEVELED PL LP (IN.)	LPC (IN.)	BEVELED PL T (IN.)
												N1	V1 (IN.) ✱	N2	V2 (IN.) ✱	N3	V3 (IN.) ✱	N4	V4 (IN.) ✱																					
1	1-A	LG-63	P3	10	7.50	119.42	-	-	-	-	5	-	-	-	-	-	-	-	-	-	3.50	-	-	-	-	B5	-	-	-	-	-	3.50	-	-	-	-	B5	-	-	-	-
1	1-B	LG-63	P3	10	7.50	119.42	-	-	-	-	5	-	-	-	-	-	-	-	-	-	3.50	-	-	-	-	B5	-	-	-	-	-	3.50	-	-	-	-	B5	-	-	-	-
1	1-C	LG-63	P3	10	7.50	119.42	-	-	-	-	5	-	-	-	-	-	-	-	-	-	3.50	-	-	-	-	B5	-	-	-	-	-	3.50	-	-	-	-	B5	-	-	-	-
1	1-D	LG-63	P3	10	7.50	119.42	-	-	-	-	5	-	-	-	-	-	-	-	-	-	3.50	-	-	-	-	B5	-	-	-	-	-	3.50	-	-	-	-	B5	-	-	-	-
1	1-E	LG-63	P3	10	7.50	119.42	-	-	-	-	5	-	-	-	-	-	-	-	-	-	3.50	-	-	-	-	B5	-	-	-	-	-	3.50	-	-	-	-	B5	-	-	-	-
1	1-F	LG-63	P3	10	7.50	119.42	-	-	-	-	5	-	-	-	-	-	-	-	-	-	3.50	-	-	-	-	B5	-	-	-	-	-	3.50	-	-	-	-	B5	-	-	-	-
1	1-G	LG-63	P3	10	7.50	119.42	-	-	-	-	5	-	-	-	-	-	-	-	-	-	3.50	-	-	-	-	B5	-	-	-	-	-	3.50	-	-	-	-	B5	-	-	-	-
1	1-H	LG-63	P3	10	7.50	119.42	-	-	-	-	5	-	-	-	-	-	-	-	-	-	3.50	-	-	-	-	B5	-	-	-	-	-	3.50	-	-	-	-	B5	-	-	-	-
1	1-I	LG-63	P3	10	7.50	119.42	-	-	-	-	5	-	-	-	-	-	-	-	-	-	3.50	-	-	-	-	B5	-	-	-	-	-	3.50	-	-	-	-	B5	-	-	-	-
2	2-A	LG-63	P3	10	7.50	95.42	-	-	-	-	5	-	-	-	-	-	-	-	-	-	3.50	-	-	-	-	B5	-	-	-	-	-	3.50	-	-	-	-	B5	-	-	-	-
2	2-B	LG-63	P3	10	7.50	95.42	-	-	-	-	5	-	-	-	-	-	-	-	-	-	3.50	-	-	-	-	B5	-	-	-	-	-	3.50	-	-	-	-	B5	-	-	-	-
2	2-C	LG-63	P3	10	7.50	95.42	-	-	-	-	5	-	-	-	-	-	-	-	-	-	3.50	-	-	-	-	B5	-	-	-	-	-	3.50	-	-	-	-	B5	-	-	-	-
2	2-D	LG-63	P3	10	7.50	95.42	-	-	-	-	5	-	-	-	-	-	-	-	-	-	3.50	-	-	-	-	B5	-	-	-	-	-	3.50	-	-	-	-	B5	-	-	-	-
2	2-E	LG-63	P3	10	7.50	95.42	-	-	-	-	5	-	-	-	-	-	-	-	-	-	3.50	-	-	-	-	B5	-	-	-	-	-	3.50	-	-	-	-	B5	-	-	-	-
2	2-F	LG-63	P3	10	7.50	95.42	-	-	-	-	5	-	-	-	-	-	-	-	-	-	3.50	-	-	-	-	B5	-	-	-	-	-	3.50	-	-	-	-	B5	-	-	-	-
2	2-G	LG-63	P3	10	7.50	95.42	-	-	-	-	5	-	-	-	-	-	-	-	-	-	3.50	-	-	-	-	B5	-	-	-	-	-	3.50	-	-	-	-	B5	-	-	-	-
2	2-H	LG-63	P3	10	7.50	95.42	-	-	-	-	5	-	-	-	-	-	-	-	-	-	3.50	-	-	-	-	B5	-	-	-	-	-	3.50	-	-	-	-	B5	-	-	-	-
2	2-I	LG-63	P3	10	7.50	95.42	-	-	-	-	5	-	-	-	-	-	-	-	-	-	3.50	-	-	-	-	B5	-	-	-	-	-	3.50	-	-	-	-	B5	-	-	-	-
3	3-A	LG-63	P3	10	7.50	119.42	-	-	-	-	5	-	-	-	-	-	-	-	-	-	3.50	-	-	-	-	B5	-	-	-	-	-	3.50	-	-	-	-	B5	-	-	-	-
3	3-B	LG-63	P3	10	7.50	119.42	-	-	-	-	5	-	-	-	-	-	-	-	-	-	3.50	-	-	-	-	B5	-	-	-	-	-	3.50	-	-	-	-	B5	-	-	-	-
3	3-C	LG-63	P3	10	7.50	119.42	-	-	-	-	5	-	-	-	-	-	-	-	-	-	3.50	-	-	-	-	B5	-	-	-	-	-	3.50	-	-	-	-	B5	-	-	-	-
3	3-D	LG-63	P3	10	7.50	119.42	-	-	-	-	5	-	-	-	-	-	-	-	-	-	3.50	-	-	-	-	B5	-	-	-	-	-	3.50	-	-	-	-	B5	-	-	-	-
3	3-E	LG-63	P3	10	7.50	119.42	-	-	-	-	5	-	-	-	-	-	-	-	-	-	3.50	-	-	-	-	B5	-	-	-	-	-	3.50	-	-	-	-	B5	-	-	-	-
3	3-F	LG-63	P3	10	7.50	119.42	-	-	-	-	5	-	-	-	-	-	-	-	-	-	3.50	-	-	-	-	B5	-	-	-	-	-	3.50	-	-	-	-	B5	-	-	-	-
3	3-G	LG-63	P3	10	7.50	119.42	-	-	-	-	5	-	-	-	-	-	-	-	-	-	3.50	-	-	-	-	B5	-	-	-	-	-	3.50	-	-	-	-	B5	-	-	-	-
3	3-H	LG-63	P3	10	7.50	119.42	-	-	-	-	5	-	-	-	-	-	-	-	-	-	3.50	-	-	-	-	B5	-	-	-	-	-	3.50	-	-	-	-	B5	-	-	-	-
3	3-I	LG-63	P3	10	7.50	119.42	-	-	-	-	5	-	-	-	-	-	-	-	-	-	3.50	-	-	-	-	B5	-	-	-	-	-	3.50	-	-	-	-	B5	-	-	-	-
4	4-A	LG-63	P3	10	7.50	126.56	-	-	-	-	5	-	-	-	-	-	-	-	-	-	3.50	-	-	-	-	B5	-	-	-	-	-	3.50	-	-	-	-	B5	-	-	-	-
4	4-B	LG-63	P3	10	7.50	126.56	-	-	-	-	5	-	-	-	-	-	-	-	-	-	3.50	-	-	-	-	B5	-	-	-	-	-	3.50	-	-	-	-	B5	-	-	-	-
4	4-C	LG-63	P3	10	7.50	126.56	-	-	-	-	5	-	-	-	-	-	-	-	-	-	3.50	-	-	-	-	B5	-	-	-	-	-	3.50	-	-	-	-	B5	-	-	-	-
4	4-D	LG-63	P3	10	7.50	126.56	-	-	-	-	5	-	-	-	-	-	-	-	-	-	3.50	-	-	-	-	B5	-	-	-	-	-	3.50	-	-	-	-	B5	-	-	-	-
4	4-E	LG-63	P3	10	7.50	126.56	-	-	-	-	5	-	-	-	-	-	-	-	-	-	3.50	-	-	-	-	B5	-	-	-	-	-	3.50	-	-	-	-	B5	-	-	-	-
4	4-F	LG-63	P3	10	7.50	126.56	-	-	-	-	5	-	-	-	-	-	-	-	-	-	3.50	-	-	-	-	B5	-	-	-	-	-	3.50	-	-	-	-	B5	-	-	-	-
4	4-G	LG-63	P3	10	7.50	126.56	-	-	-	-	5	-	-	-	-	-	-	-	-	-	3.50	-	-	-	-	B5	-	-	-	-	-	3.50	-	-	-	-	B5	-	-	-	-
4	4-H	LG-63	P3	10	7.50	126.56	-	-	-	-	5	-	-	-	-	-	-	-	-	-	3.50	-	-	-	-	B5	-	-	-	-	-	3.50	-	-	-	-	B5	-	-	-	-
4	4-I	LG-63	P3	10	7.50	126.56	-	-	-	-	5	-	-	-	-	-	-	-	-	-	3.50	-	-	-	-	B5	-	-	-	-	-	3.50	-	-	-	-	B5	-	-	-	-
5	5-A	LG-63	P3	10	7.50	100.28	-	-	-	-	5	-	-	-	-	-	-	-	-	-	3.50	-	-	-	-	B5	-	-	-	-	-	3.50	-	-	-	-	B5	-	-	-	-
5	5-B	LG-63	P3	10	7.50	100.28	-	-	-	-	5	-	-	-	-	-	-	-	-	-	3.50	-	-	-	-	B5	-	-	-	-	-	3.50	-	-	-	-	B5	-	-	-	-
5	5-C	LG-63	P3	10	7.50	100.28	-	-	-	-	5	-	-	-	-	-	-	-	-	-	3.50	-	-	-	-	B5	-	-	-	-	-	3.50	-	-	-	-	B5	-	-	-	-
5	5-D	LG-63	P3	10	7.50	100.28	-	-	-	-	5	-	-	-	-	-	-	-	-	-	3.50	-	-	-	-	B5	-	-	-	-	-	3.50	-	-	-	-	B5	-	-	-	-
5	5-E	LG-63	P3	10	7.50	100.28	-	-	-	-	5	-	-	-	-	-	-	-	-	-	3.50	-	-	-	-	B5	-	-	-	-	-	3.50	-	-	-	-	B5	-	-	-	-
5	5-F	LG-63	P3	10	7.50	100.28	-	-	-	-	5	-	-	-	-	-	-	-	-	-	3.50	-	-	-	-	B5	-	-	-	-	-	3.50	-	-	-	-	B5	-	-	-	-
5	5-G	LG-63	P3	10	7.50	100.28	-	-	-	-	5	-	-	-	-	-	-	-	-	-	3.50	-	-	-	-	B5	-	-	-	-	-	3.50	-	-	-	-	B5	-	-	-	-
5	5-H	LG-63	P3	10	7.50	100.28	-	-	-	-	5	-	-	-	-	-	-	-	-	-	3.50	-	-	-	-	B5	-	-	-	-	-	3.50	-	-	-	-	B5	-	-	-	-
5	5-I	LG-63	P3	10	7.50	100.28	-	-	-	-	5	-	-	-	-	-	-	-	-	-	3.50	-	-	-	-	B5	-	-	-	-	-	3.50	-	-	-	-	B5	-	-	-	-

NOTES:

SEE LG COMMON DETAILS AND SPECIFIC DETAILS FOR DEFINITIONS, DETAILS AND INSTRUCTIONS.

△ DETERMINATION OF "X" DIMENSION FOR GIRDERS AT SKEWED EXPANSION JOINTS MUST BE DONE ASSUMING THE JOINT IS OPEN TO △max. SEE LG COMMON DETAILS SHT. 1 OF 11 FOR DEFINITION OF △max AND SHT. 3 OF 11 FOR DETAILS OF GIRDERS AT SKEWED EXPANSION JOINTS.

AT LOCATION OF SCUPPERS, GIRDER STIRRUPS WILL HAVE TO CHANGE. (REPLACE LONG WITH SHORT.)

✱ V1, V2, V3 & V4 REPRESENT MAX. SPACING IN ZONES.

⊕ FOR ESTIMATING PURPOSES USE 64 - 6/10 ø LOW LAX STRANDS. THIS IS THE MAXIMUM ALLOWED NUMBER OF STRANDS ALLOWED BY THE BDEM.

TECHNICAL PROPOSAL PLANS
S:\xdrive\HUVAL Projects\7262 (I-10 Calcasieu P3)\05 Drawings\Bridge\02 Border to Print\01-Lakeshore\Technical Proposal\20-21_Girder Details_Lakeshore.dgn 3/9/2023 9:20:16 AM

PARISH: CALCASIEU | CONTROL SECTION: 450-91 | STATE PROJECT: H.003931

DESIGN: M. HEBERT | CHECK: K. WERTHER | DETAIL: K. CART | CHECK: M. HEBERT | REVIEW | SERIES: 2 OF 2

TECHNICAL PROPOSAL PLANS
PRELIMINARY
NOT FOR CONSTRUCTION
ENGINEER:
MATTHEW L. HEBERT
LICENSE #: 37713
DATE: 3/9/2023

NO.	DATE	REVISION OR CHANGE ORDER DESCRIPTION	BY

STATE OF LOUISIANA — JOHN BEL EDWARDS — GOVERNOR

B-13 (LAKESHORE)
GIRDER DATA TABLE
EASTBOUND

I-10 CALCASIEU RIVER BRIDGE IMPROVEMENTS

DOTD LOUISIANA DEPARTMENT OF TRANSPORTATION & DEVELOPMENT

CBP CALCASIEU BRIDGE PARTNERS

TECHNICAL PROPOSAL PLANS

S:\xdrive\HUVAL Projects\7262 (I-10 Calcasieu P3)\05 Drawings\Bridge\02 Border to Prin\02-Ryan\Technical Proposal\3_GP&E Ryan.dgn 3/9/2023 9:21:50 AM

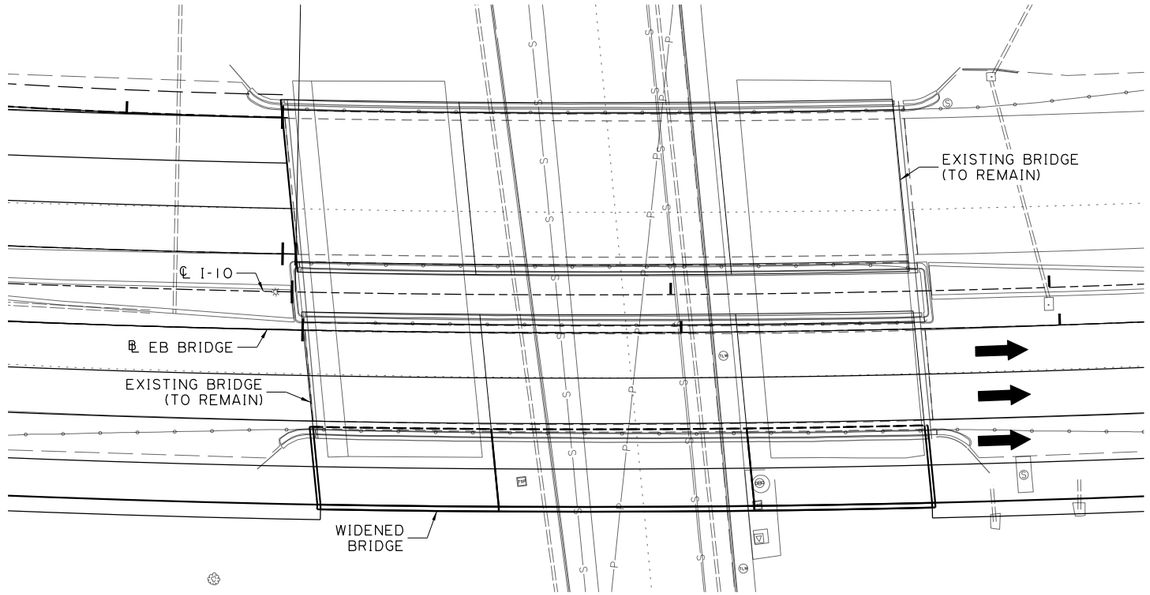

PLAN
SCALE: 1" = 20'-0"

NOTES:

SPAN LENGTHS AND ℄ BENT STATIONS ARE MEASURED ALONG ℄ I-10, PERPENDICULAR TO THE INTERSECTION POINT OF ℄ BENT AND ℄ EB BRIDGE.

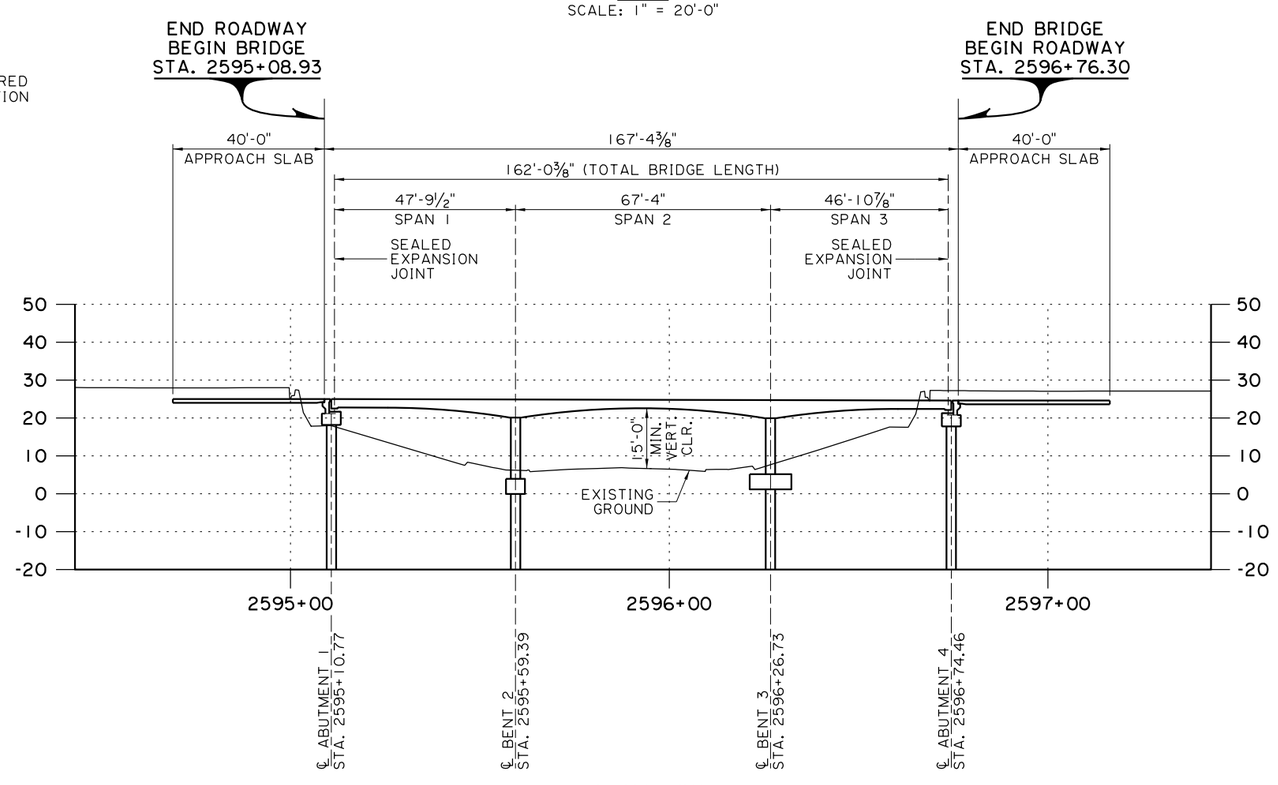

ELEVATION
SCALE: 1" = 20'-0"

SHEET NUMBER	217

PARISH	CONTROL SECTION	STATE PROJECT
CALCASIEU	450-91	H.003931

DESIGN	M. HEBERT
CHECK	K. WERTHER
DETAIL	K. CART
CHECK	M. HEBERT
REVIEW	
SERIES #	

TECHNICAL PROPOSAL PLANS

PRELIMINARY
NOT FOR CONSTRUCTION

ENGINEER:
KATHERINE V. WERTHER

LICENSE #:
46868

DATE:
3/9/2023

NO.	DATE	REVISION OR CHANGE ORDER DESCRIPTION	BY

STATE OF LOUISIANA
JOHN BEL EDWARDS
GOVERNOR

B-14 (RYAN STREET)

GENERAL PLAN AND ELEVATION

I-10 CALCASIEU RIVER BRIDGE IMPROVEMENTS

DOTD
LOUISIANA DEPARTMENT OF TRANSPORTATION & DEVELOPMENT

CBP
CALCASIEU BRIDGE PARTNERS

TECHNICAL PROPOSAL PLANS
S:\xdrive\HUVAL Projects\7262 (I-10 Calcasieu P3)\05 Drawings\Bridge\02 Border to Print\02-Ryan\Technical Proposal\4-6_Bridge Sections at Ryan.dgn
5/10/2023 3:54:50 PM

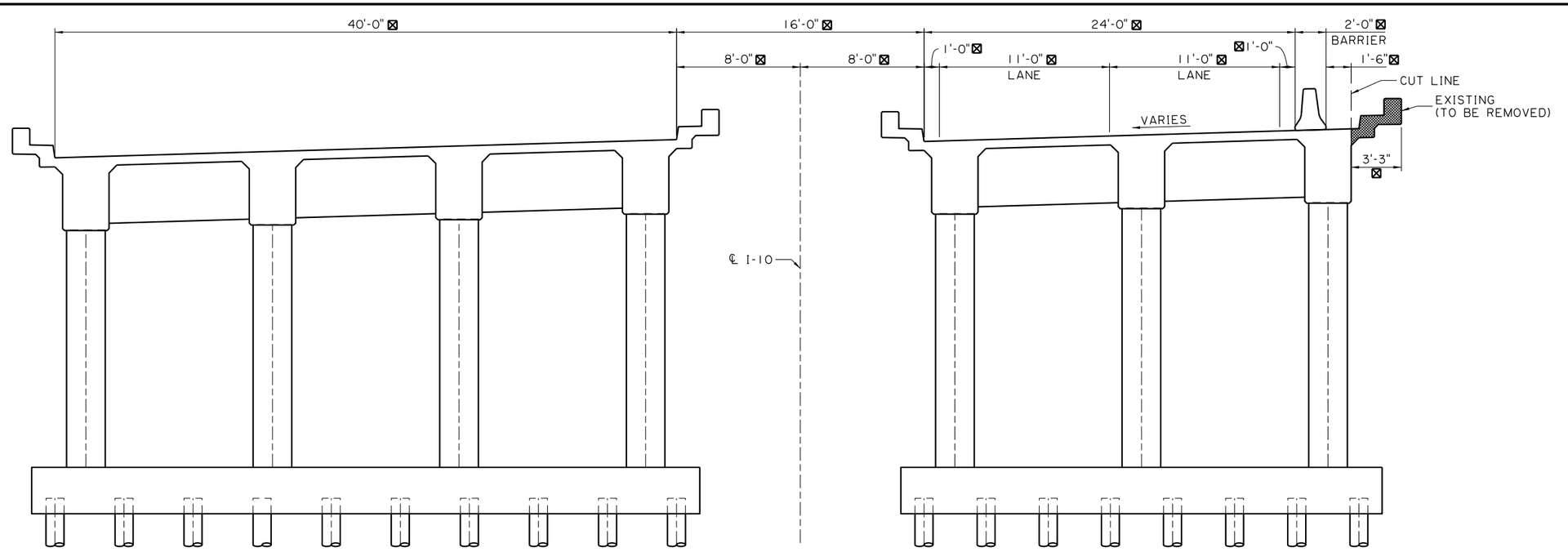

PHASE 1 REMOVAL
(LOOKING UPSTATION)

⊠ DIMENSIONS ARE PERPENDICULAR ON SPAN.

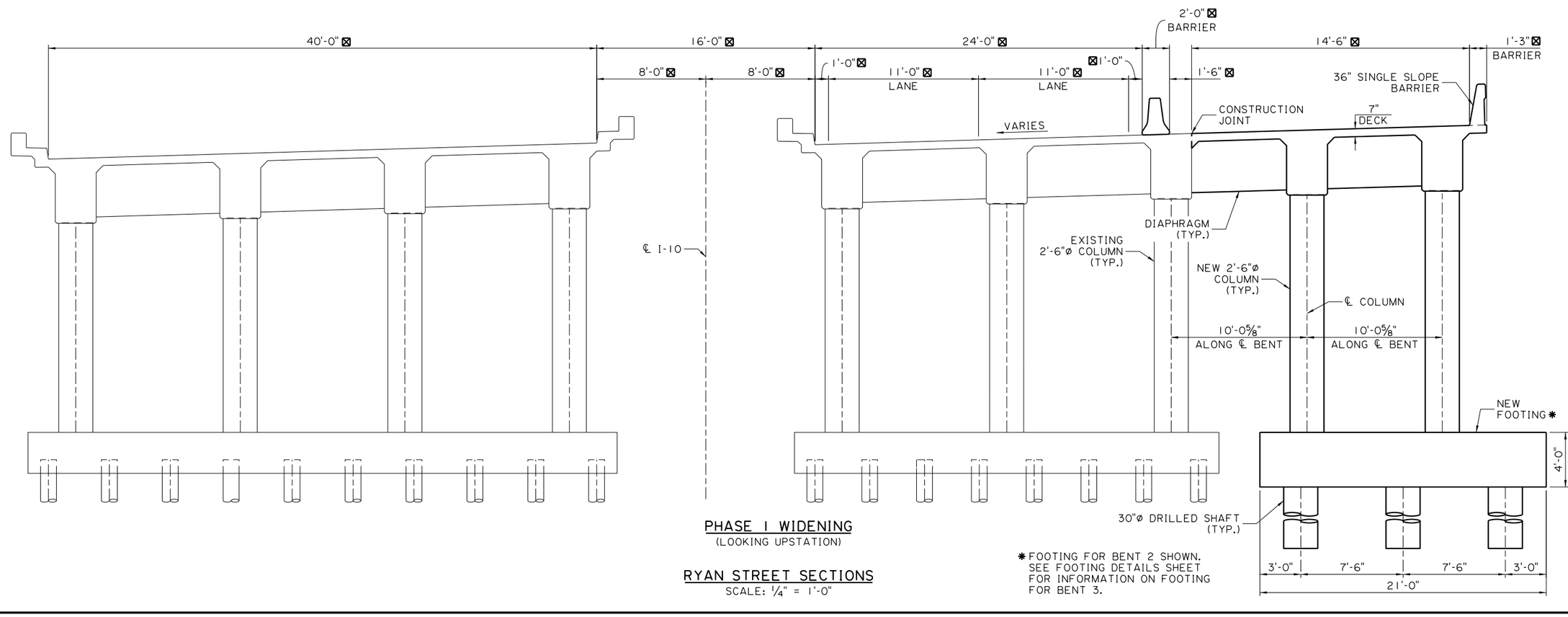

PHASE 1 WIDENING
(LOOKING UPSTATION)

RYAN STREET SECTIONS
SCALE: 1/4" = 1'-0"

*FOOTING FOR BENT 2 SHOWN. SEE FOOTING DETAILS SHEET FOR INFORMATION ON FOOTING FOR BENT 3.

SHEET NUMBER	218
PARISH	CALCASIEU
CONTROL SECTION	450-91
STATE PROJECT	H.003931
DESIGN	M. HEBERT
CHECK	K. WERTHER
DETAIL	K. CART
CHECK	M. HEBERT
REVIEW	
SERIES #	1 OF 3

TECHNICAL PROPOSAL PLANS
PRELIMINARY
NOT FOR CONSTRUCTION
ENGINEER:
KATHERINE V. WERTHER
LICENSE #:
46868
DATE:
5/10/2023

NO.	DATE	REVISION OR CHANGE ORDER DESCRIPTION	BY

B-14 (RYAN STREET)
BRIDGE SECTIONS
I-10 CALCASIEU RIVER BRIDGE IMPROVEMENTS

LOUISIANA DEPARTMENT OF TRANSPORTATION & DEVELOPMENT

CALCASIEU BRIDGE PARTNERS

TECHNICAL PROPOSAL PLANS
S:\xdrive\HUVAL Projects\7262 (I-10 Calcasieu P3)\05 Drawings\Bridge\02 Border to Print\02-Ryan\Technical Proposal\4-6_Bridge Sections at Ryan.dgn
5/10/2023 3:55:09 PM

⊠ DIMENSIONS ARE PERPENDICULAR ON SPAN.

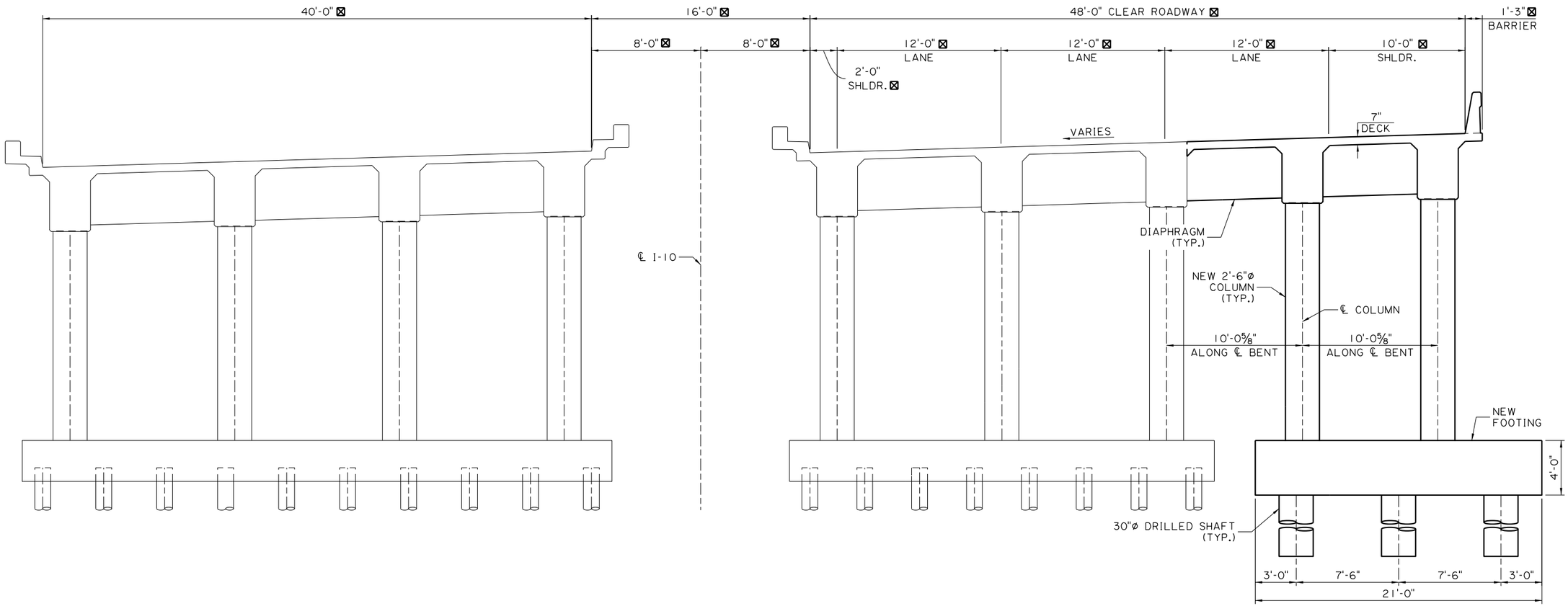

RYAN STREET - FINISHED SECTION @ BENT 2

(LOOKING UPSTATION)
SCALE: ¼" = 1'-0"

SHEET NUMBER	219

PARISH	CONTROL SECTION	STATE PROJECT
CALCASIEU	450-91	H.003931

DESIGN	CHECK	DETAIL	CHECK	REVIEW	SERIES
M. HEBERT	K. WERTHER	K. CART	M. HEBERT		2 OF 3

TECHNICAL PROPOSAL PLANS

PRELIMINARY
NOT FOR CONSTRUCTION
ENGINEER:
KATHERINE V. WERTHER

LICENSE #:
46868

DATE:
5/10/2023

NO.	DATE	REVISION OR CHANGE ORDER DESCRIPTION	BY

STATE OF LOUISIANA
JOHN BEL EDWARDS
GOVERNOR

B-14 (RYAN STREET)
BRIDGE SECTIONS

I-10 CALCASIEU RIVER BRIDGE IMPROVEMENTS

DOTD
LOUISIANA DEPARTMENT OF TRANSPORTATION & DEVELOPMENT

CBP
CALCASIEU BRIDGE PARTNERS

TECHNICAL PROPOSAL PLANS
S:\xdrive\HUVAL Projects\7262 (I-10 Calcasieu P3)\05 Drawings\Bridge\02 Border to Print\02-Ryan\Technical Proposal\4-6_Bridge Sections at Ryan.dgn
5/10/2023 3:55:26 PM

⊠ DIMENSIONS ARE PERPENDICULAR ON SPAN.

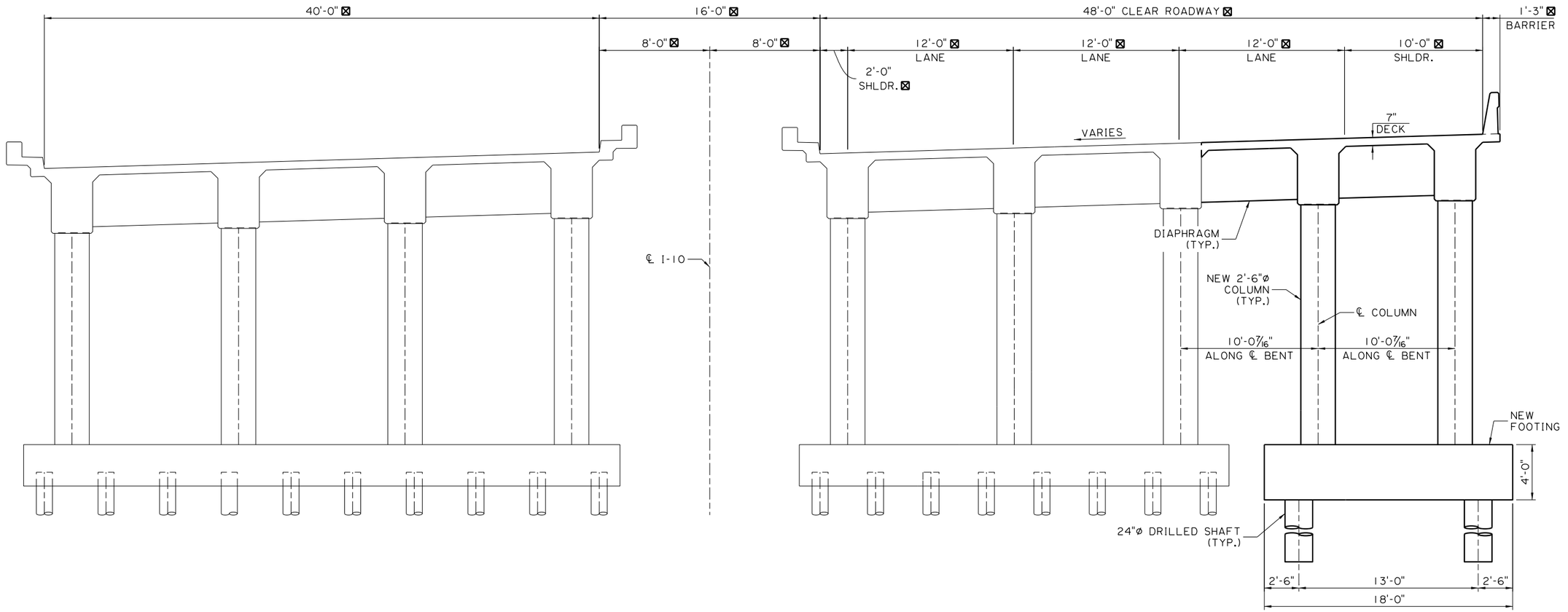

RYAN STREET - FINISHED SECTION @ BENT 3

(LOOKING UPSTATION)
SCALE: 1/4" = 1'-0"

SHEET NUMBER	220

PARISH	CONTROL SECTION	STATE PROJECT
CALCASIEU	450-91	H.003931

DESIGN	CHECK	DETAIL	CHECK	REVIEW	SERIES
M. HEBERT	K. WERTHER	K. CART	M. HEBERT		3 OF 3

TECHNICAL PROPOSAL PLANS

PRELIMINARY
NOT FOR CONSTRUCTION

ENGINEER:
KATHERINE V. WERTHER

LICENSE #:
46868

DATE:
5/10/2023

NO.	DATE	REVISION OR CHANGE ORDER DESCRIPTION	BY

B-14 (RYAN STREET)
BRIDGE SECTIONS

I-10 CALCASIEU RIVER BRIDGE IMPROVEMENTS

DOTD
LOUISIANA DEPARTMENT OF TRANSPORTATION & DEVELOPMENT

CBP
CALCASIEU BRIDGE PARTNERS

TECHNICAL PROPOSAL PLANS
S:\xdrive\HUVAL Projects\7262 (I-10 Calcasieu P3)\05 Drawings\Bridge\02 Border to Print\02-Ryan\Technical Proposal\7_Foundation Layout_Ryan.dgn 3/9/2023 9:26:30 AM

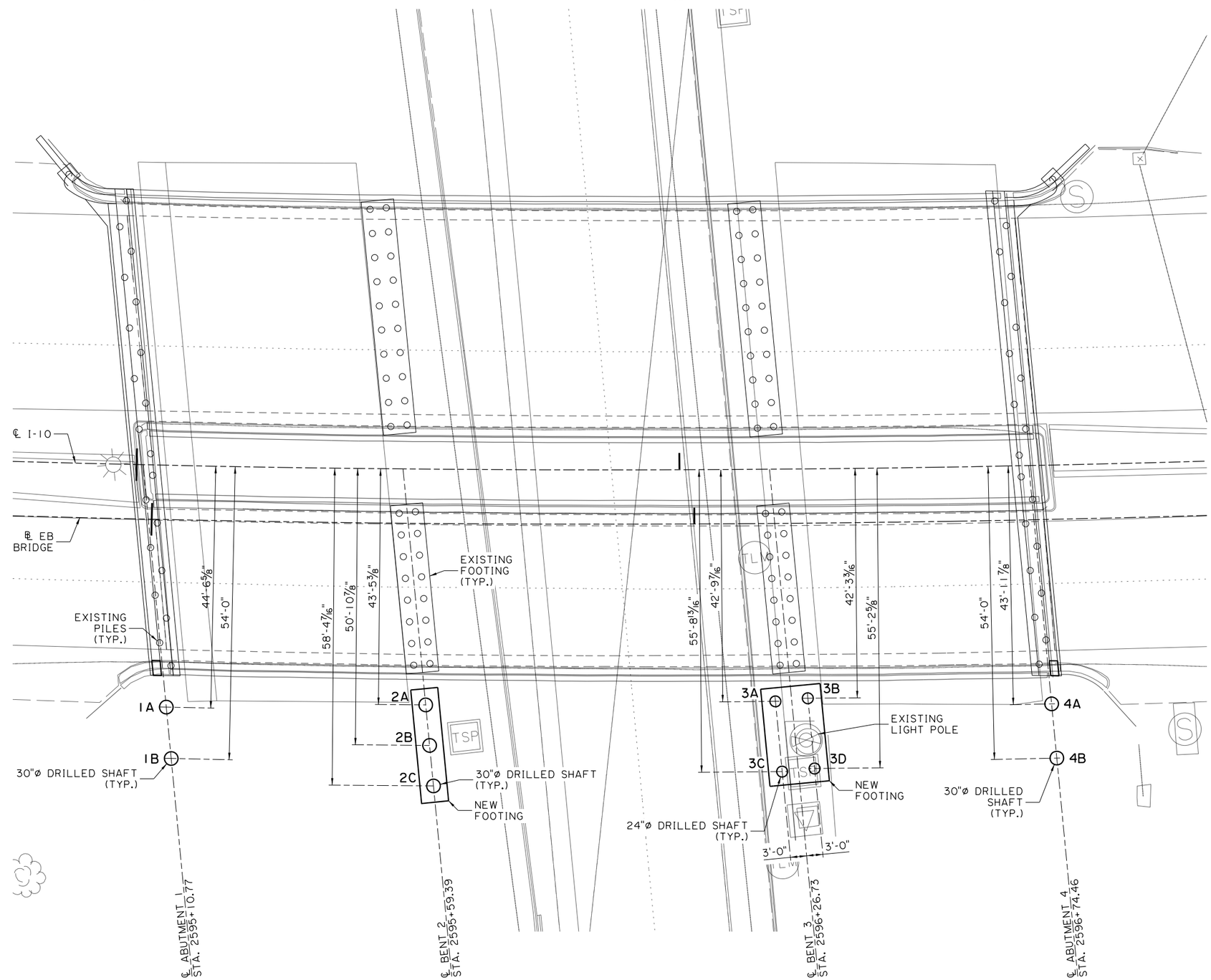

FOUNDATION LAYOUT
SCALE: 1" = 10'-0"

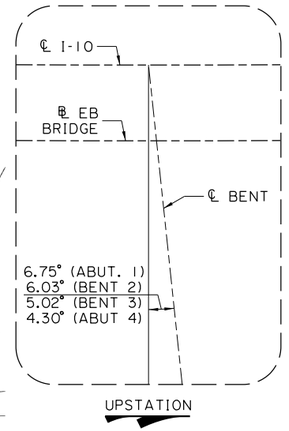

SKEW ANGLE DETAIL

SHEET NUMBER	221
PARISH	CALCASIEU
CONTROL SECTION	450-91
STATE PROJECT	H.003931

DESIGN	M. HEBERT
CHECK	K. WERTHER
DETAIL	K. CART
CHECK	M. HEBERT
REVIEW	
SERIES #	

TECHNICAL PROPOSAL PLANS
PRELIMINARY
NOT FOR CONSTRUCTION
ENGINEER:
KATHERINE V. WERTHER
LICENSE #: 46868
DATE: 3/9/2023

NO.	DATE	REVISION OR CHANGE ORDER DESCRIPTION	BY

B-14 (RYAN STREET)
FOUNDATION LAYOUT

I-10 CALCASIEU RIVER BRIDGE IMPROVEMENTS

LOUISIANA DEPARTMENT OF TRANSPORTATION & DEVELOPMENT

CALCASIEU BRIDGE PARTNERS

TECHNICAL PROPOSAL PLANS
S:\xdrive\HUVAL Projects\7262 (I-10 Calcasieu P3)\05 Drawings\Bridge\02 Border to Print\02-Ryan\Technical Proposal\8-9_Footing Details_Ryan.dgn 3/9/2023 9:27:50 AM

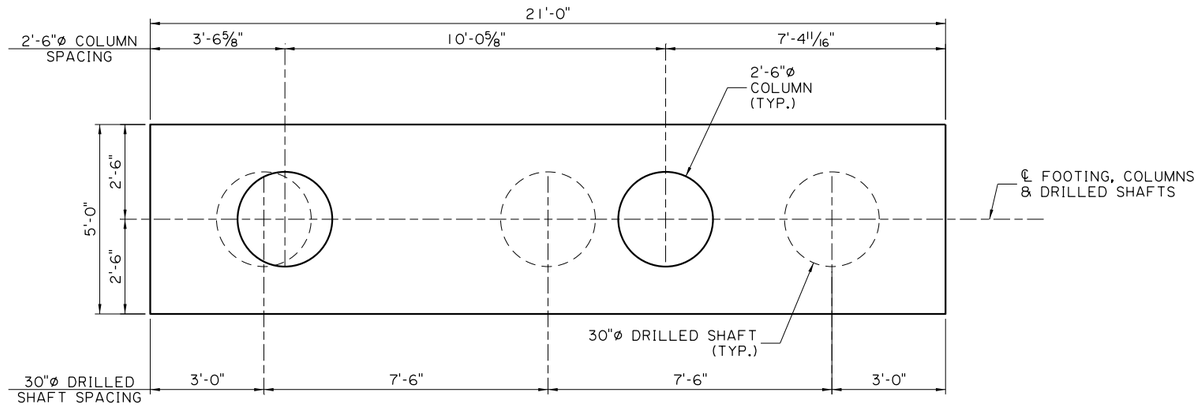

FOOTING - PLAN
(BENT 2)
SCALE: ½" = 1'-0"

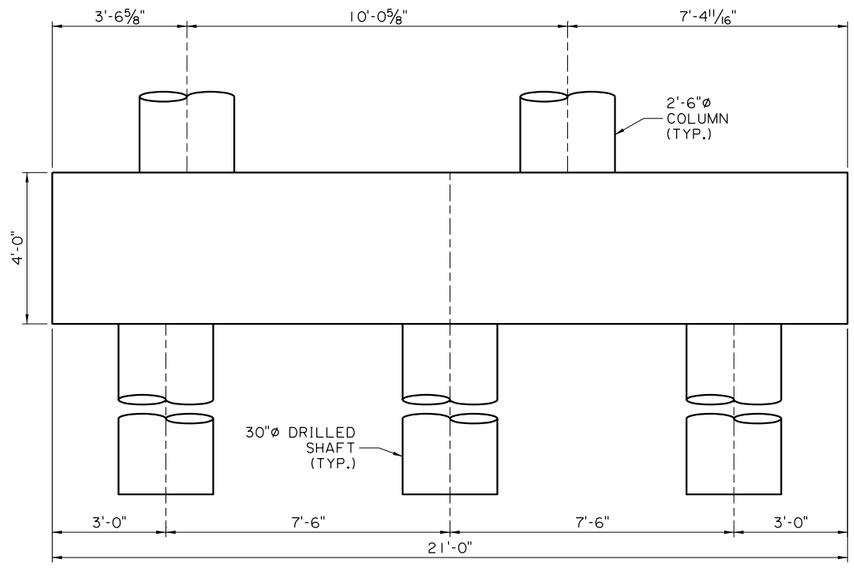

ELEVATION
(BENT 2)
SCALE: ½" = 1'-0"

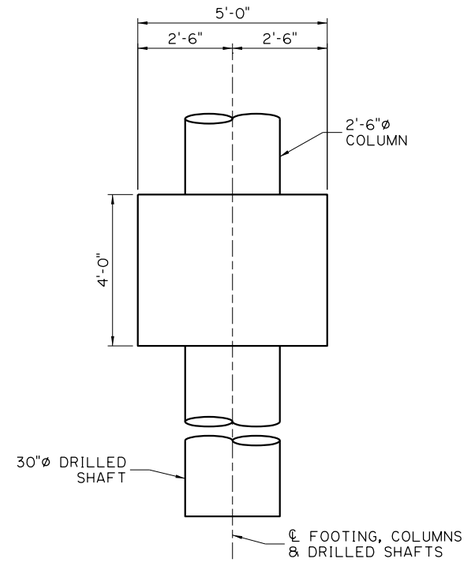

SECTION
(BENT 2)
SCALE: ½" = 1'-0"

SHEET NUMBER	222
PARISH	CALCASIEU
CONTROL SECTION	450-91
STATE PROJECT	H.003931
DESIGN	M. HEBERT
CHECK	K. WERTHER
DETAIL	K. CART
CHECK	M. HEBERT
REVIEW	
SERIES #	1 OF 2

TECHNICAL PROPOSAL PLANS
PRELIMINARY
NOT FOR CONSTRUCTION
ENGINEER:
KATHERINE V. WERTHER
LICENSE #:
46868
DATE:
3/9/2023

NO.	DATE	REVISION OR CHANGE ORDER DESCRIPTION	BY

B-14 (RYAN STREET)
FOOTING DETAILS
I-10 CALCASIEU RIVER BRIDGE IMPROVEMENTS

DOTD LOUISIANA DEPARTMENT OF TRANSPORTATION & DEVELOPMENT
CBP CALCASIEU BRIDGE PARTNERS

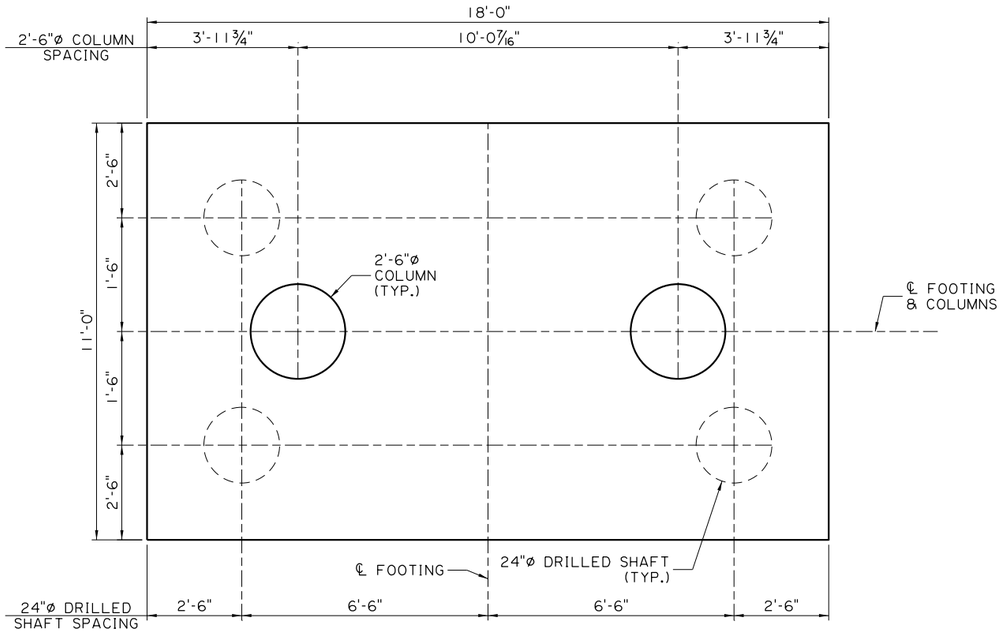

FOOTING - PLAN

(BENT 3)
SCALE: ½" = 1'-0"

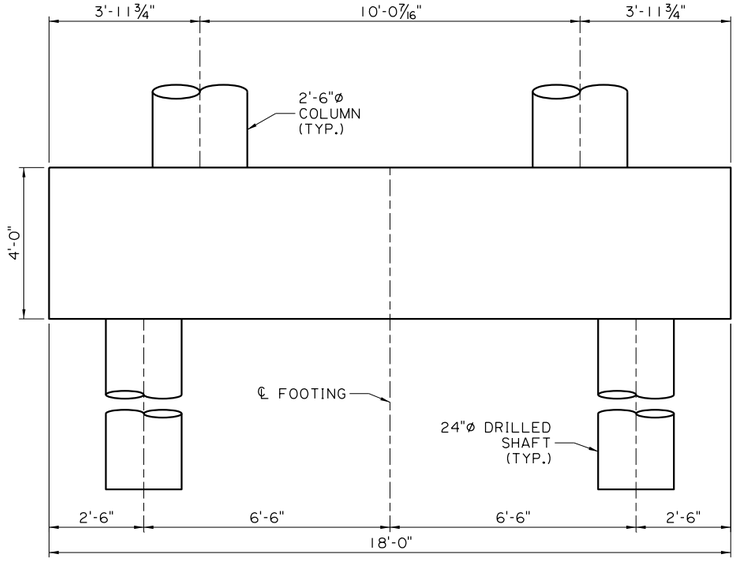

ELEVATION

(BENT 3)
SCALE: ½" = 1'-0"

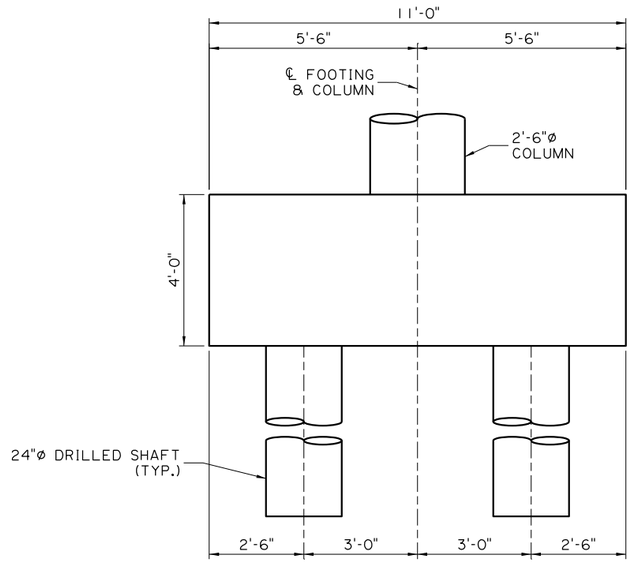

SECTION

(BENT 3)
SCALE: ½" = 1'-0"

TECHNICAL PROPOSAL PLANS

S:\xdrive\HUVAL Projects\7262 (I-10 Calcasieu P3)\05 Drawings\Bridge\02 Border to Print\02-Ryan\Technical Proposal\8-9_Footing Details_Ryan.dgn 3/9/2023 9:28:04 AM

SHEET NUMBER 223

PARISH	CONTROL SECTION	STATE PROJECT
CALCASIEU	450-91	H.003931

DESIGN	M. HEBERT	DETAIL	K. CART	REVIEW
CHECK	K. WERTHER	CHECK	M. HEBERT	SERIES • 2 OF 2

TECHNICAL PROPOSAL PLANS
PRELIMINARY
NOT FOR CONSTRUCTION
ENGINEER:
KATHERINE V. WERTHER
LICENSE #:
46868
DATE:
3/9/2023

NO.	DATE	REVISION OR CHANGE ORDER DESCRIPTION	BY

B-14 (RYAN STREET)
FOOTING DETAILS

I-10 CALCASIEU RIVER BRIDGE IMPROVEMENTS

LOUISIANA DEPARTMENT OF TRANSPORTATION & DEVELOPMENT

CALCASIEU BRIDGE PARTNERS

TECHNICAL PROPOSAL PLANS
S:\wdrive\HUVAL Projects\7262 (I-10 Calcasieu P3)\05 Drawings\Bridge\02 Border to Print\02-Ryan\Technical Proposal\10_Abutment Removal Details_Ryan.dgn 3/9/2023 9:30:03 AM

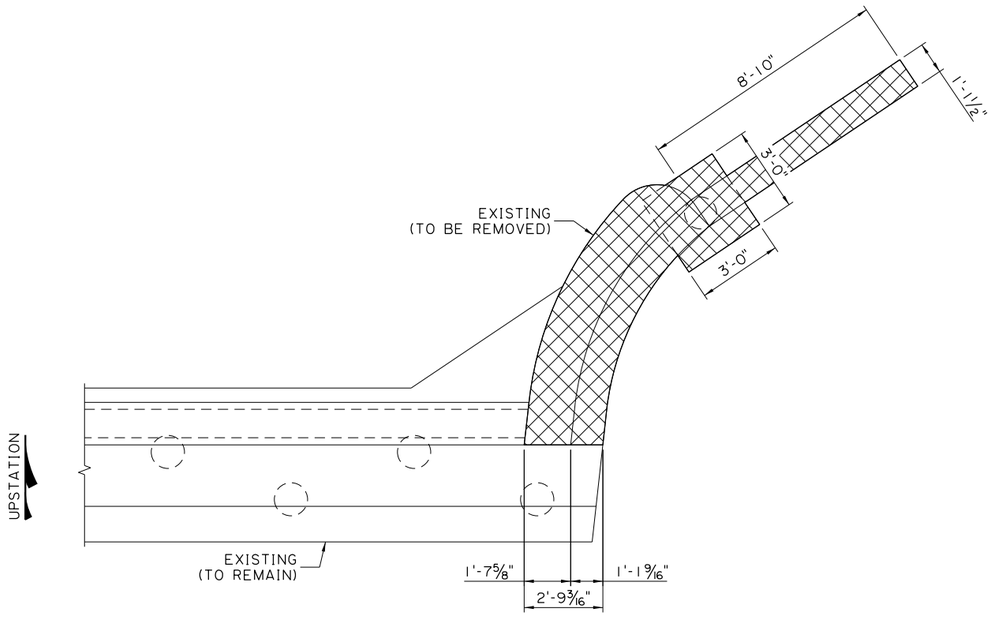

REMOVAL - PLAN

(ABUTMENT 4 SHOWN) (ABUTMENT 1 SIMILAR)
SCALE: ⅜" = 1'-0"

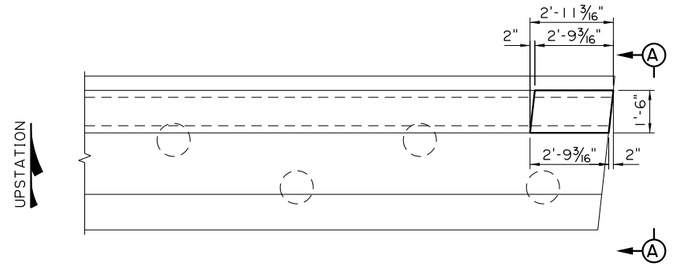

NEW CONSTRUCTION - PLAN

(ABUTMENT 4 SHOWN) (ABUTMENT 1 SIMILAR)
SCALE: ⅜" = 1'-0"

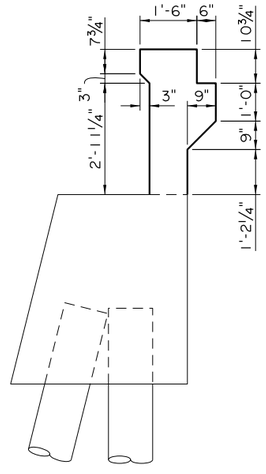

SECTION A-A

SCALE: ½" = 1'-0"

SHEET NUMBER	224
PARISH	CALCASIEU
CONTROL SECTION	450-91
STATE PROJECT	H.003931
DESIGN	M. HEBERT
CHECK	K. WERTHER
DETAIL	K. CART
CHECK	M. HEBERT
REVIEW	
SERIES #	

TECHNICAL PROPOSAL PLANS
PRELIMINARY
NOT FOR CONSTRUCTION
ENGINEER:
KATHERINE V. WERTHER
LICENSE #: 46868
DATE: 3/9/2023

NO.	DATE	REVISION OR CHANGE ORDER	BY

B-14 (RYAN STREET)
ABUTMENT REMOVAL DETAILS

I-10 CALCASIEU RIVER BRIDGE IMPROVEMENTS

DOTD LOUISIANA DEPARTMENT OF TRANSPORTATION & DEVELOPMENT

CBP CALCASIEU BRIDGE PARTNERS

TECHNICAL PROPOSAL PLANS
S:\xdrive\HUVAL Projects\7262 (I-10 Calcasieu P3)\05 Drawings\Bridge\02 Border to Print\02-Ryan\Technical Proposal\11_Abutment 1 Details_Ryan (1 of 2).dgn 3/9/2023 9:31:11 AM

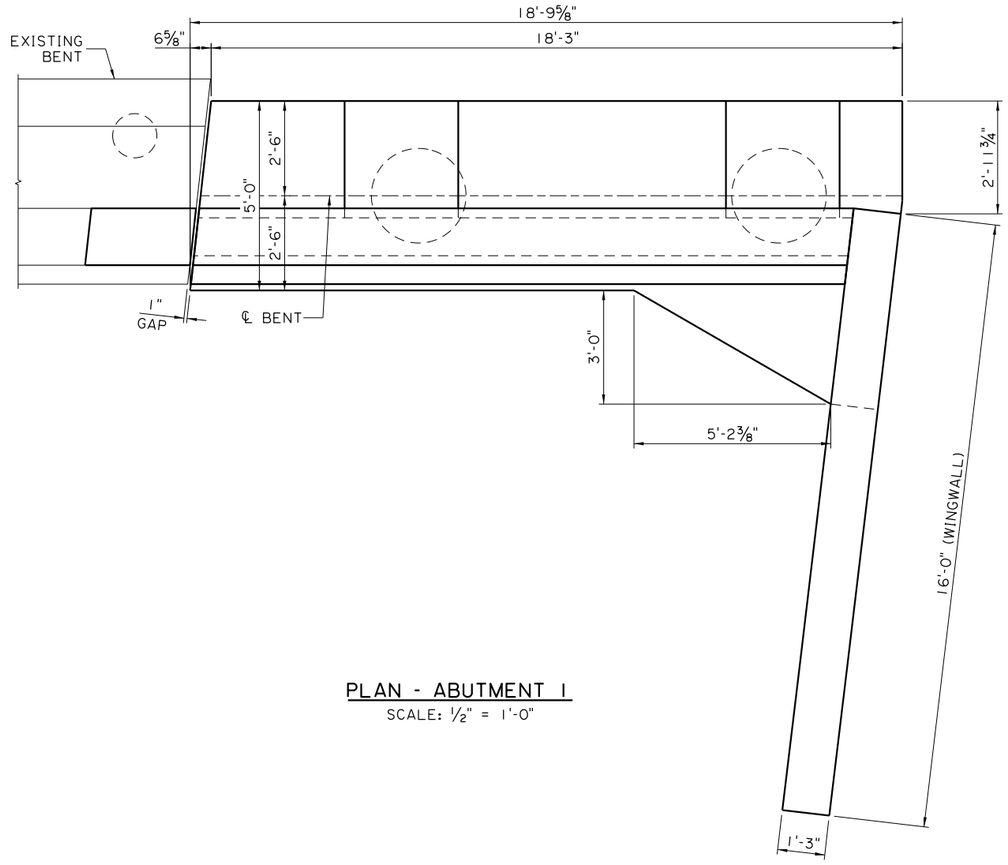

PLAN - ABUTMENT 1
SCALE: ½" = 1'-0"

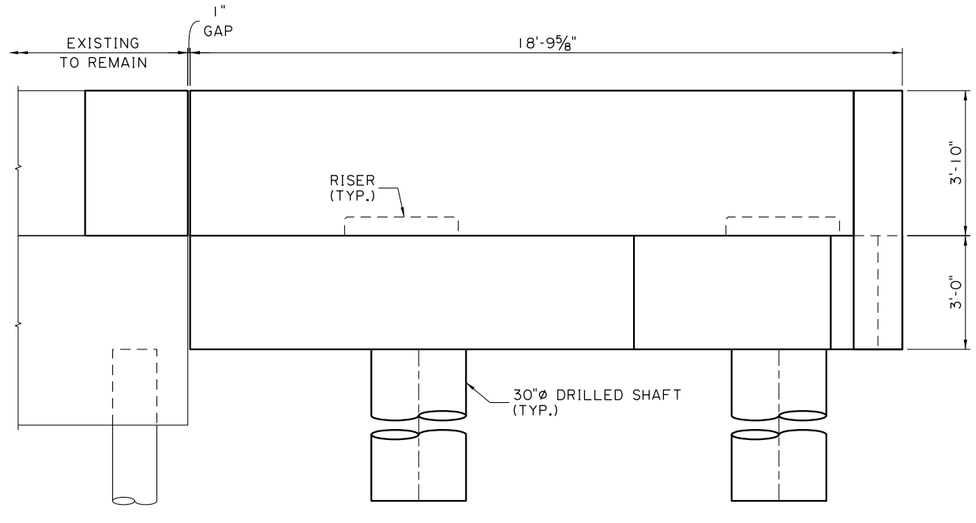

ELEVATION - ABUTMENT 1
SCALE: ½" = 1'-0"

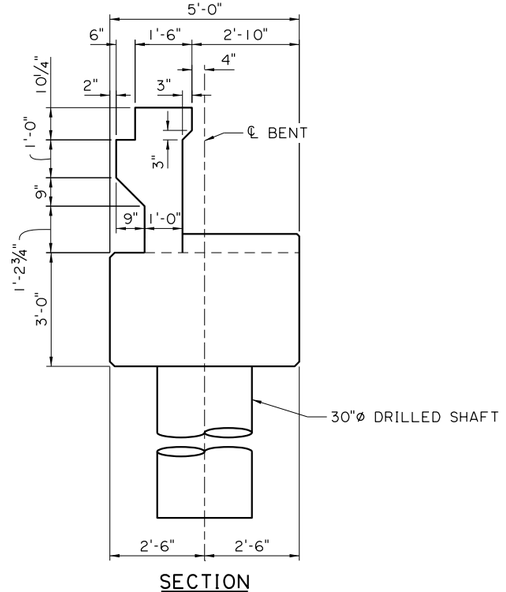

SECTION
SCALE: ½" = 1'-0"

SHEET NUMBER	225
PARISH	CALCASIEU
CONTROL SECTION	450-91
STATE PROJECT	H.003931
DESIGN	M. HEBERT
CHECK	K. WERTHER
DETAIL	K. CART
CHECK	M. HEBERT
REVIEW	
SERIES #	1 OF 2

TECHNICAL PROPOSAL PLANS
PRELIMINARY
NOT FOR CONSTRUCTION
ENGINEER:
KATHERINE V. WERTHER
LICENSE #:
46868
DATE:
3/9/2023

NO.	DATE	REVISION OR CHANGE ORDER DESCRIPTION	BY

STATE OF LOUISIANA
DEPARTMENT OF TRANSPORTATION AND DEVELOPMENT
CERTIFIED

B-14 (RYAN STREET)
ABUTMENT 1 DETAILS

I-10 CALCASIEU RIVER BRIDGE IMPROVEMENTS

DOTD
LOUISIANA DEPARTMENT OF TRANSPORTATION & DEVELOPMENT

CBP
CALCASIEU BRIDGE PARTNERS

TECHNICAL PROPOSAL PLANS
S:\wdrive\HUVAL Projects\7262 (I-10 Calcasieu P3)\05 Drawings\Bridge\02 Border to Print\02-Ryan\Technical Proposal\2_Abutment 1 Details_Ryan (2 of 2).dgn 3/9/2023 9:31:58 AM

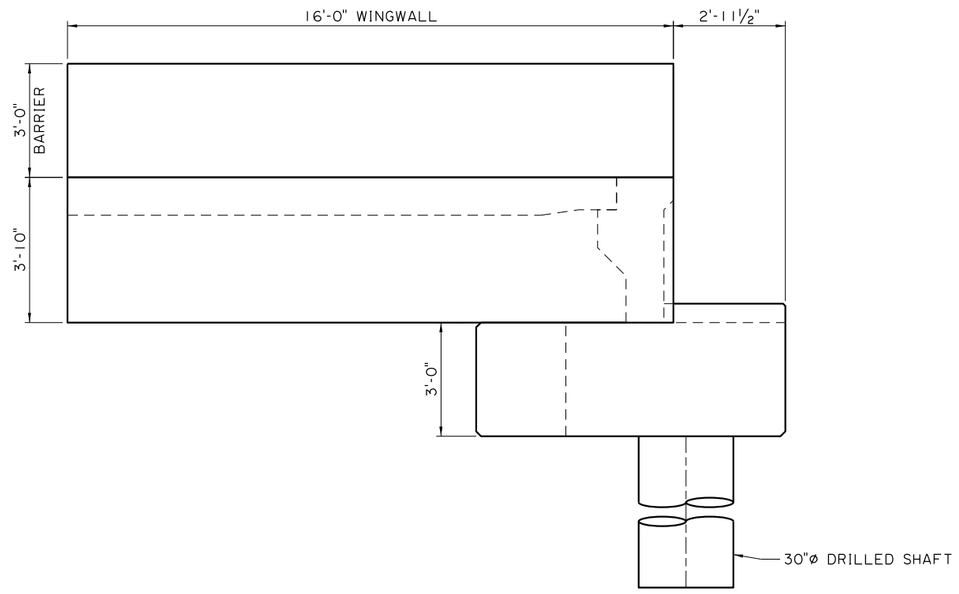

WINGWALL
SCALE: ½" = 1'-0"

SHEET NUMBER	226

PARISH	CONTROL SECTION	STATE PROJECT
CALCASIEU	450-91	H.003931

DESIGN	M. HEBERT	DETAIL	K. CART	REVIEW	
CHECK	K. WERTHER	CHECK	M. HEBERT	SERIES #	2 OF 2

TECHNICAL PROPOSAL PLANS
PRELIMINARY
NOT FOR CONSTRUCTION
ENGINEER:
KATHERINE V. WERTHER
LICENSE #:
46868
DATE:
3/9/2023

NO.	DATE	REVISION OR CHANGE ORDER DESCRIPTION	BY

B-14 (RYAN STREET)
ABUTMENT 1 DETAILS

I-10 CALCASIEU RIVER BRIDGE IMPROVEMENTS

DOTD LOUISIANA DEPARTMENT OF TRANSPORTATION & DEVELOPMENT

CBP CALCASIEU BRIDGE PARTNERS

TECHNICAL PROPOSAL PLANS
S:\xdrive\HUVAL Projects\7262 (I-10 Calcasieu P3)\05 Drawings\Bridge\02 Border to Print\02-Ryan\Technical Proposal\13_Abutment 4 Details_Ryan (1 of 2).dgn 3/9/2023 9:33:00 AM

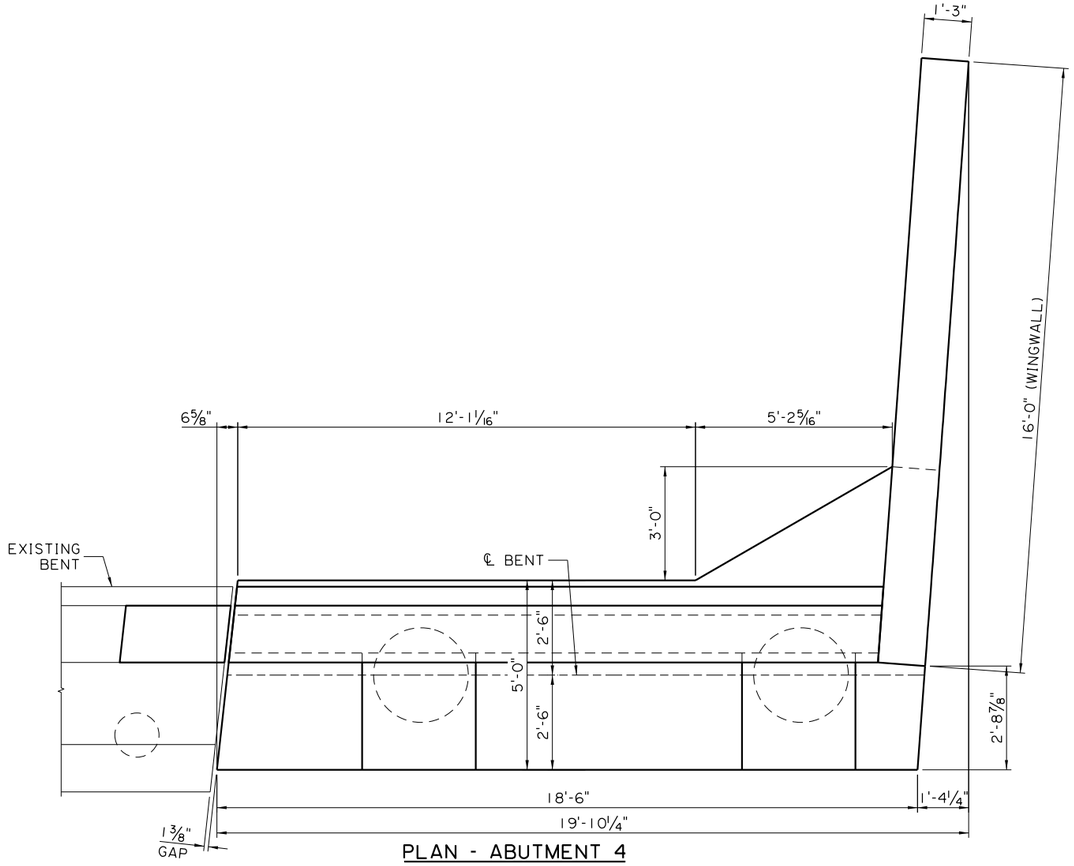

PLAN - ABUTMENT 4
SCALE: ½" = 1'-0"

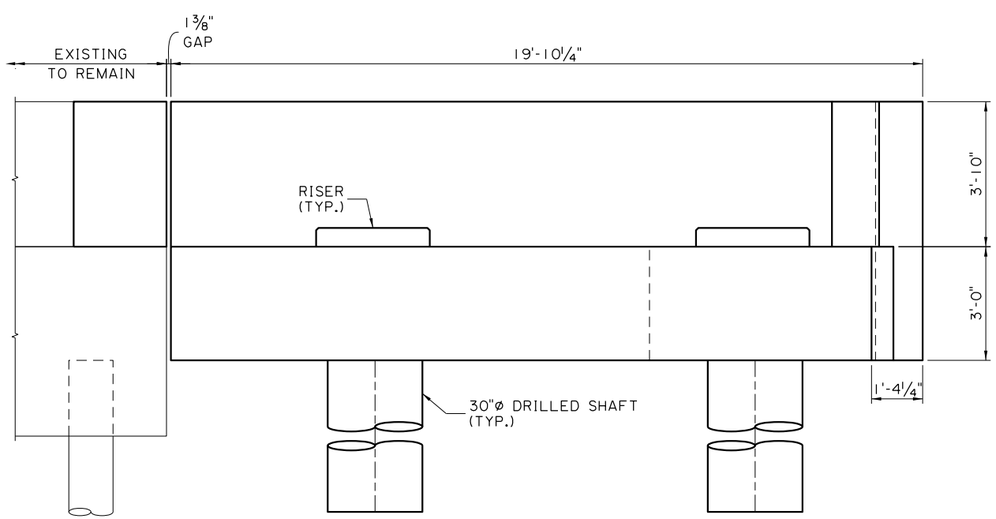

ELEVATION - ABUTMENT 4
SCALE: ½" = 1'-0"

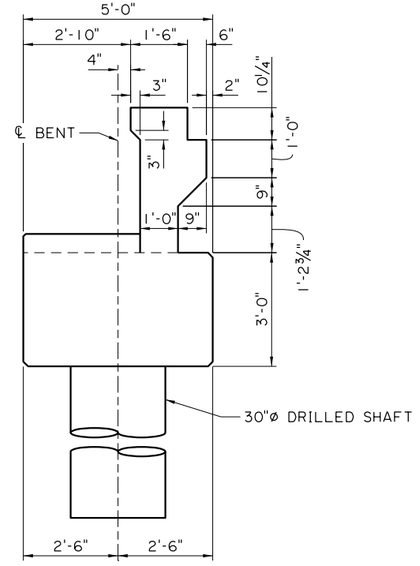

SECTION
SCALE: ½" = 1'-0"

SHEET NUMBER	227

PARISH	CONTROL SECTION	STATE PROJECT
CALCASIEU	450-91	H.003931

DESIGN	M. HEBERT
CHECK	K. WERTHER
DETAIL	K. CART
CHECK	M. HEBERT
REVIEW	
SERIES #	1 OF 2

TECHNICAL PROPOSAL PLANS
PRELIMINARY
NOT FOR CONSTRUCTION
ENGINEER:
KATHERINE V. WERTHER
LICENSE #: 46868
DATE: 3/9/2023

NO.	DATE	REVISION OR CHANGE ORDER DESCRIPTION	BY

STATE OF LOUISIANA

B-14 (RYAN STREET)
ABUTMENT 4 DETAILS

I-10 CALCASIEU RIVER BRIDGE IMPROVEMENTS

DOTD LOUISIANA DEPARTMENT OF TRANSPORTATION & DEVELOPMENT

CBP CALCASIEU BRIDGE PARTNERS

TECHNICAL PROPOSAL PLANS
S:\xdrive\HUVAL Projects\7262 (I-10 Calcasieu P3)\05 Drawings\Bridge\02 Border to Print\02-Ryan\Technical Proposal\14_Abutment 4 Details_Ryan (2 of 2).dgn 3/9/2023 9:33:45 AM

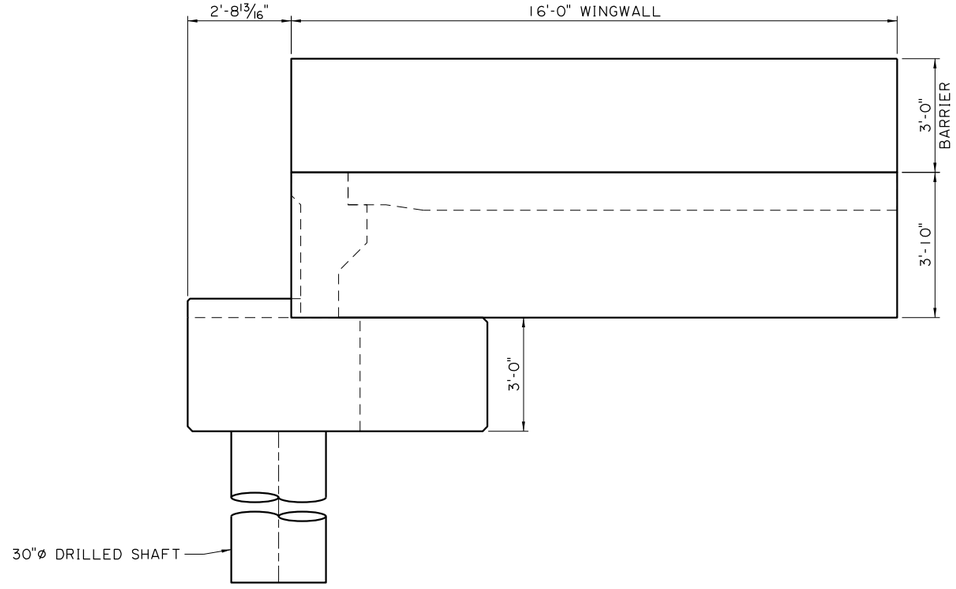

WINGWALL
SCALE: 1/2" = 1'-0"

SHEET NUMBER	228
PARISH	CALCASIEU
CONTROL SECTION	450-91
STATE PROJECT	H.003931

DESIGN	M. HEBERT	DETAIL	K. CART
CHECK	K. WERTHER	CHECK	M. HEBERT
REVIEW		SERIES #	2 OF 2

TECHNICAL PROPOSAL PLANS
PRELIMINARY
NOT FOR CONSTRUCTION
ENGINEER:
KATHERINE V. WERTHER
LICENSE #:
46868
DATE:
3/9/2023

NO.	DATE	REVISION OR CHANGE ORDER DESCRIPTION	BY

B-14 (RYAN STREET)
ABUTMENT 4 DETAILS

I-10 CALCASIEU RIVER BRIDGE IMPROVEMENTS

DOTD LOUISIANA DEPARTMENT OF TRANSPORTATION & DEVELOPMENT

CBP CALCASIEU BRIDGE PARTNERS

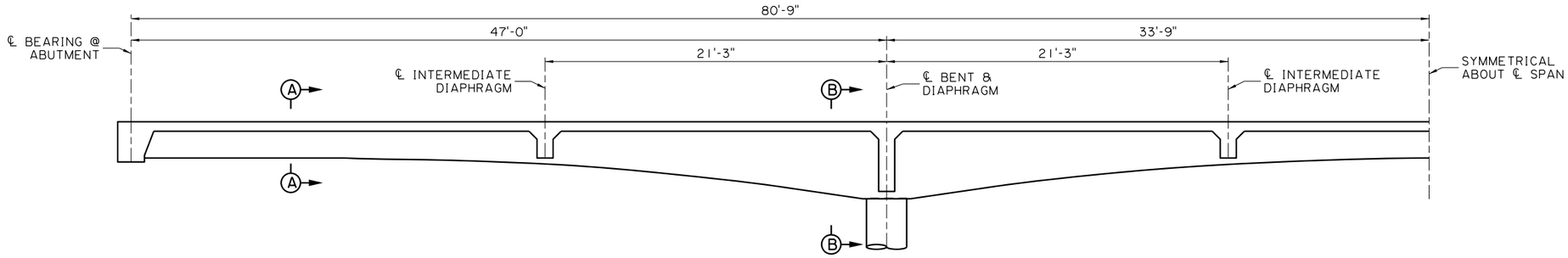

EXTERIOR GIRDER ELEVATION
SCALE: 1/4" = 1'-0"

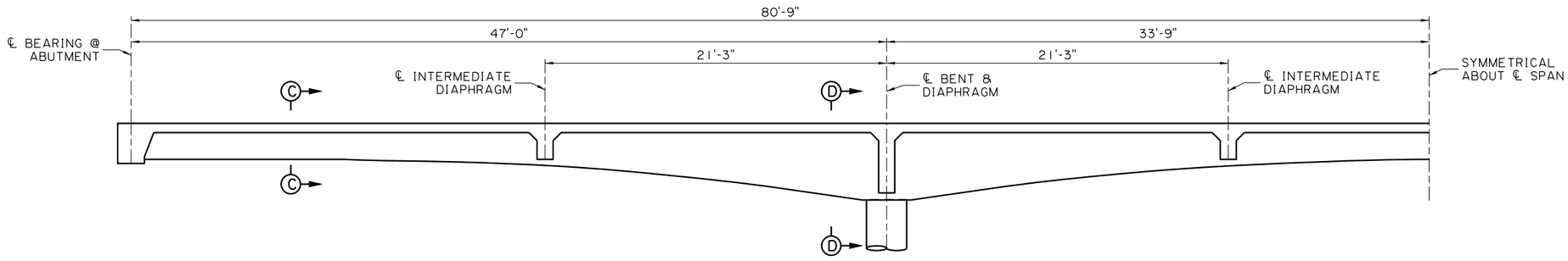

INTERIOR GIRDER ELEVATION
SCALE: 1/4" = 1'-0"

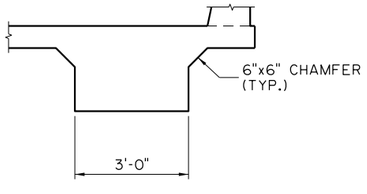

SECTION A-A
SCALE: 1/2" = 1'-0"

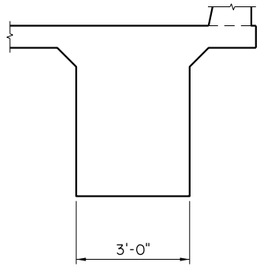

SECTION B-B
SCALE: 1/2" = 1'-0"

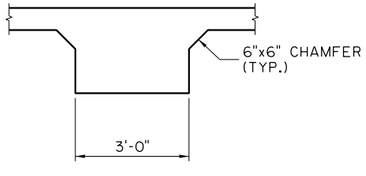

SECTION C-C
SCALE: 1/2" = 1'-0"

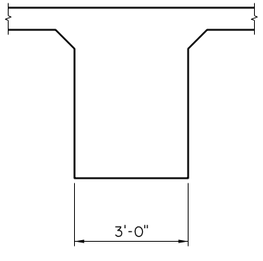

SECTION D-D
SCALE: 1/2" = 1'-0"

TECHNICAL PROPOSAL PLANS

S:\xdrive\HUVAL Projects\7262 (I-10 Calcasieu P3)\05 Drawings\Bridge\02 Border to Print\02-Ryan\Technical Proposal\15-16_Girder Details_Ryan.dgn 3/9/2023 9:34:43 AM

SHEET NUMBER 229

PARISH	CONTROL SECTION	STATE PROJECT
CALCASIEU	450-91	H.003931

DESIGN	M. HEBERT	DETAIL	K. CART
CHECK	K. WERTHER	CHECK	M. HEBERT
REVIEW		SERIES #	1 OF 2

TECHNICAL PROPOSAL PLANS
PRELIMINARY
NOT FOR CONSTRUCTION
ENGINEER:
KATHERINE V. WERTHER
LICENSE #:
46868
DATE:
3/9/2023

NO.	DATE	REVISION OR CHANGE ORDER DESCRIPTION	BY

B-14 (RYAN STREET)
GIRDER DETAILS

I-10 CALCASIEU RIVER BRIDGE IMPROVEMENTS

LOUISIANA DEPARTMENT OF TRANSPORTATION & DEVELOPMENT

CALCASIEU BRIDGE PARTNERS

TECHNICAL PROPOSAL PLANS
S:\wdrive\HUVAL Projects\7262 (I-10 Calcasieu P3)\05 Drawings\Bridge\02 Border to Print\02-Ryan\Technical Proposal\15-16_Girder Details_Ryan.dgn 3/9/2023 9:34:58 AM

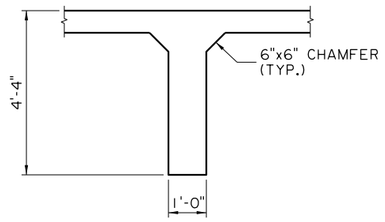

DIAPHRAGM DETAIL
(AT ℄ BENT)
SCALE: ½" = 1'-0"

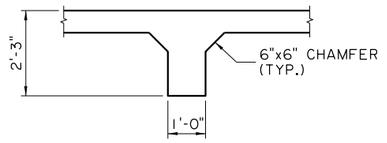

INTERMEDIATE DIAPHRAGM DETAIL
SCALE: ½" = 1'-0"

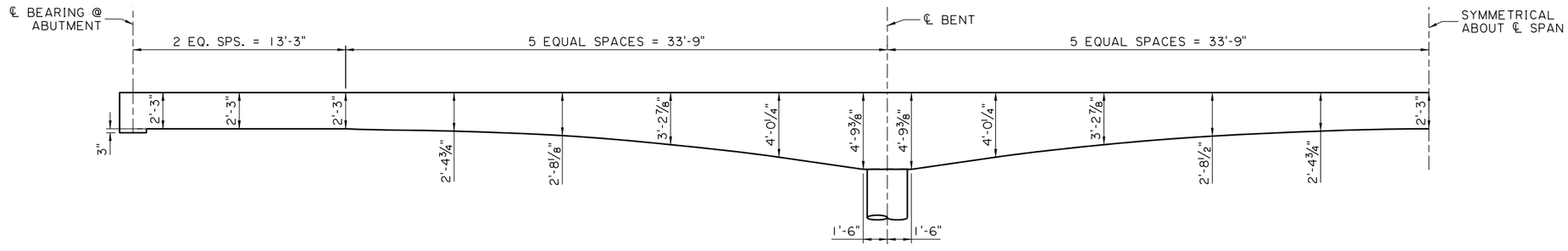

GIRDER GEOMETRICS
SCALE: ¼" = 1'-0"

SHEET NUMBER	230
PARISH	CALCASIEU
CONTROL SECTION	450-91
STATE PROJECT	H.003931
DESIGN	M. HEBERT
CHECK	K. WERTHER
DETAIL	K. CART
CHECK	M. HEBERT
REVIEW	
SERIES #	2 OF 2

TECHNICAL PROPOSAL PLANS
PRELIMINARY
NOT FOR CONSTRUCTION
ENGINEER:
KATHERINE V. WERTHER
LICENSE #:
46868
DATE:
3/9/2023

NO.	DATE	REVISION OR CHANGE ORDER DESCRIPTION	BY

B-14 (RYAN STREET)
GIRDER DETAILS

I-10 CALCASIEU RIVER BRIDGE IMPROVEMENTS

DOTD LOUISIANA DEPARTMENT OF TRANSPORTATION & DEVELOPMENT

CBP CALCASIEU BRIDGE PARTNERS

TECHNICAL PROPOSAL PLANS
S:\xdrive\HUVAL Projects\7262 (I-10 Calcasieu P3)\05 Drawings\Bridge\02 Border to Print\02-Ryan\Technical Proposal\17-26_Approach Slab Details_Ryan.dgn
3/9/2023 9:36:15 AM

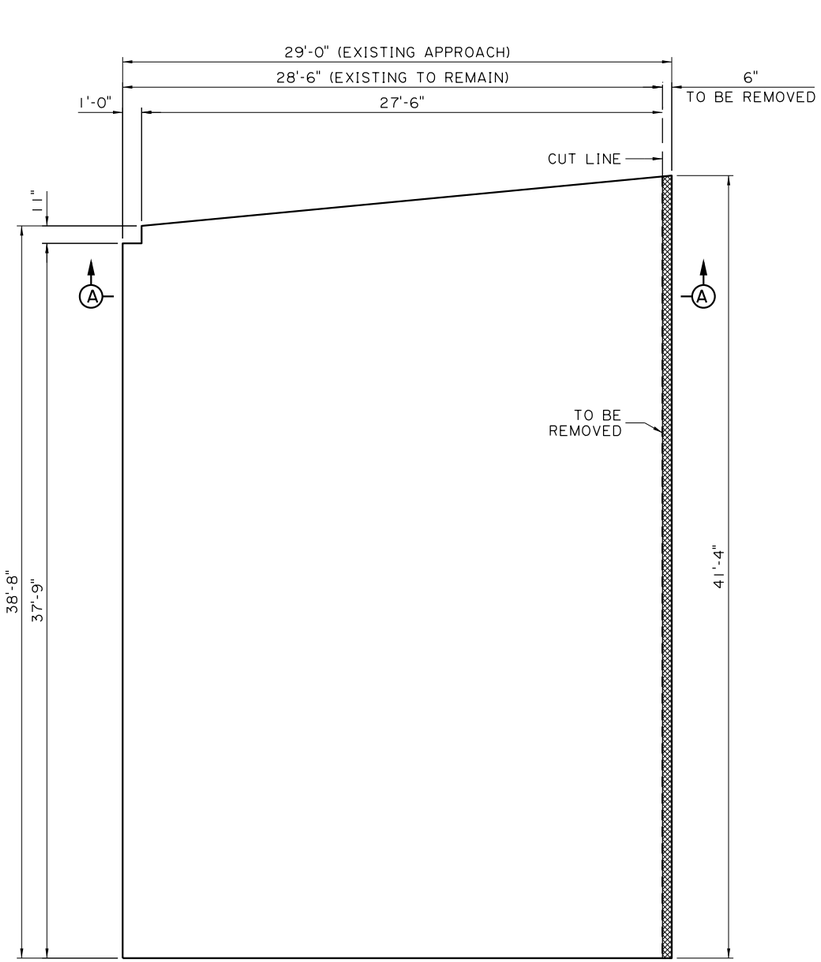

PLAN - PHASE I REMOVAL
(WEST END APPROACH)
SCALE: 1/4" = 1'-0"

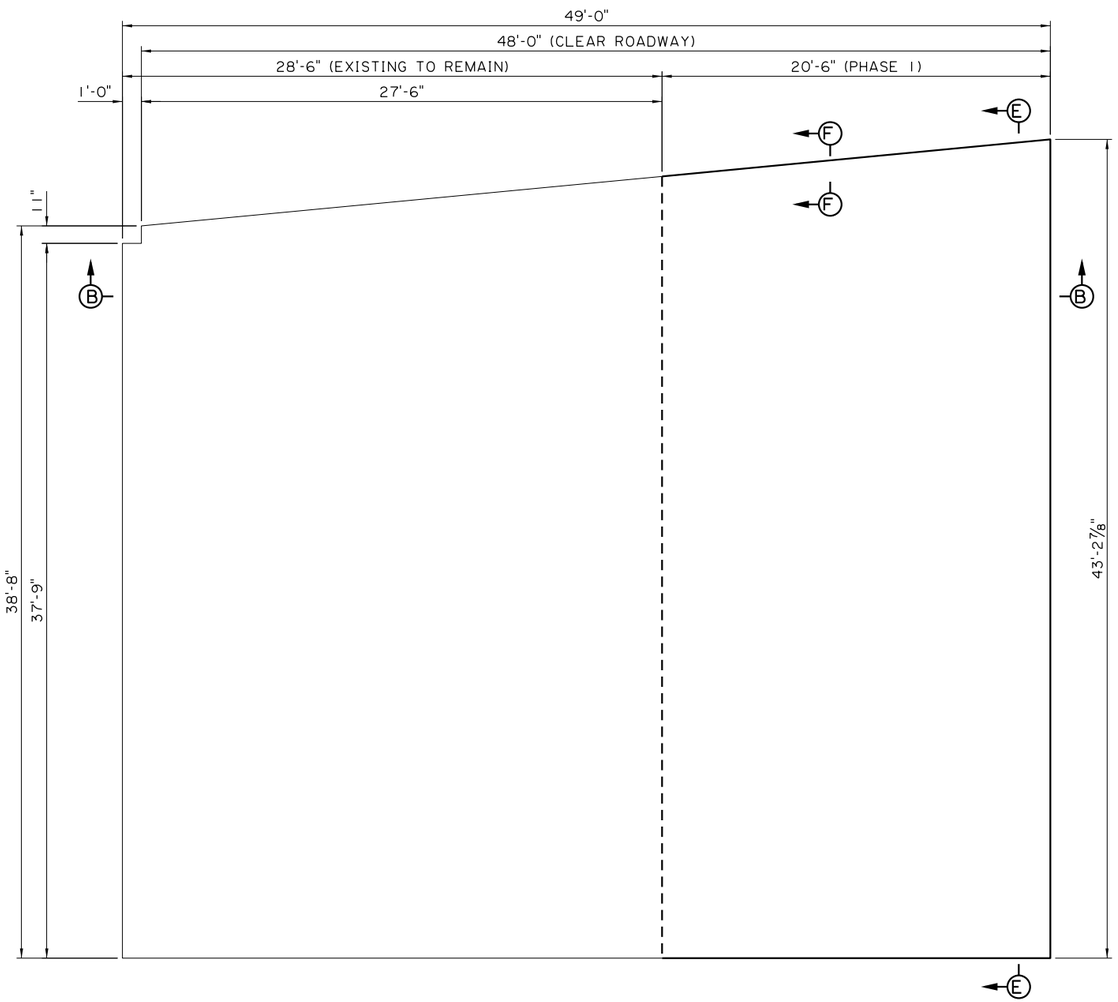

PLAN - PHASE I CONSTRUCTION
(WEST END APPROACH)
SCALE: 1/4" = 1'-0"

SHEET NUMBER	231
PARISH	CALCASIEU
CONTROL SECTION	450-91
STATE PROJECT	H.003931
DESIGN	M. HEBERT
CHECK	K. WERTHER
DETAIL	K. CART
CHECK	M. HEBERT
REVIEW	
SERIES #	1 OF 10

TECHNICAL PROPOSAL PLANS
PRELIMINARY
NOT FOR CONSTRUCTION
ENGINEER:
KATHERINE V. WERTHER
LICENSE #:
46868
DATE:
3/9/2023

NO.	DATE	REVISION OR CHANGE ORDER DESCRIPTION	BY

B-14 (RYAN STREET)
APPROACH SLAB DETAILS
I-10 CALCASIEU RIVER BRIDGE IMPROVEMENTS

DOTD LOUISIANA DEPARTMENT OF TRANSPORTATION & DEVELOPMENT
CBP CALCASIEU BRIDGE PARTNERS

TECHNICAL PROPOSAL PLANS
S:\xdrive\HUVAL Projects\7262 (I-10 Calcasieu P3)\05 Drawings\Bridge\02 Border to Print\02-Ryan\Technical Proposal\17-26_Approach Slab Details_Ryan.dgn 3/9/2023 9:36:29 AM

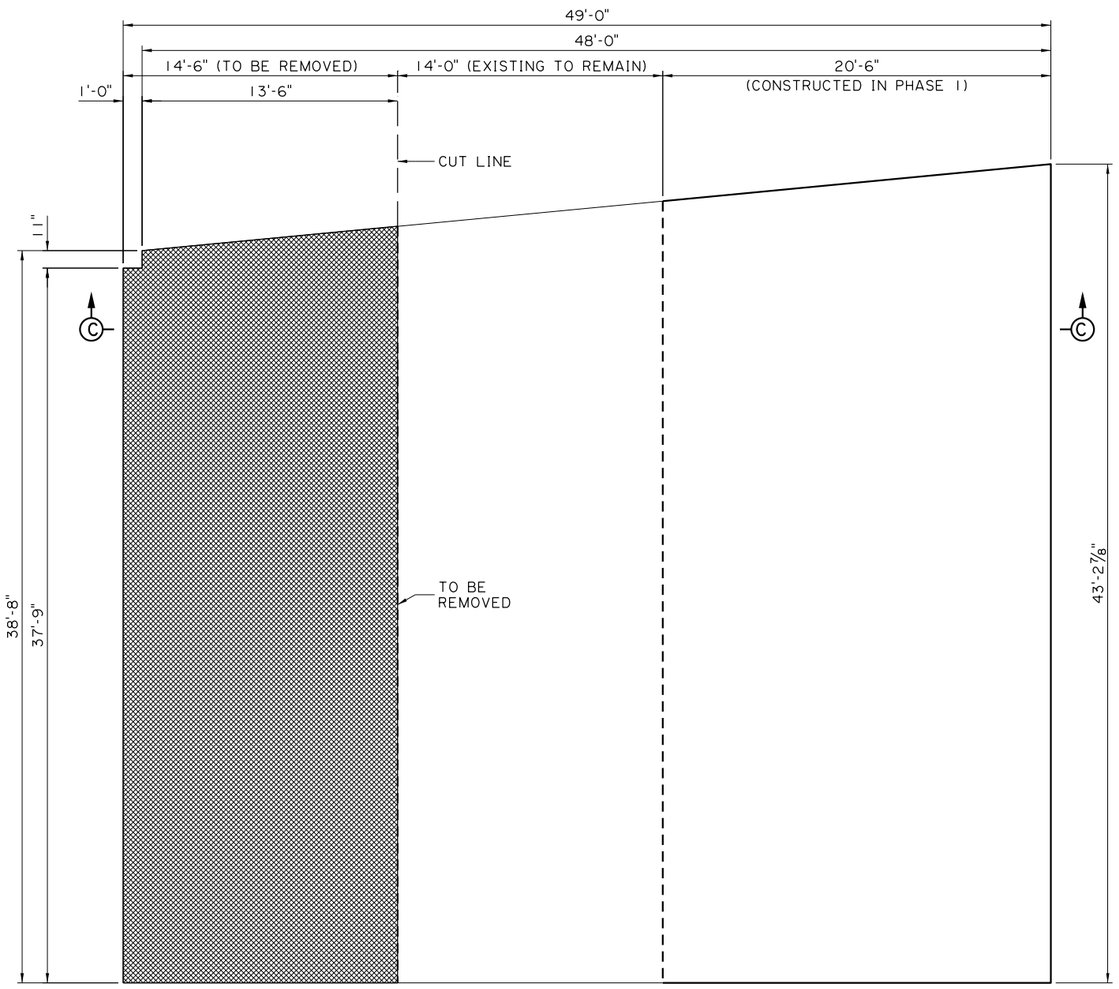

PLAN - PHASE 2 REMOVAL
(WEST END APPROACH)
SCALE: 1/4" = 1'-0"

SHEET NUMBER	232		
PARISH	CALCASIEU	CONTROL SECTION	450-91
STATE PROJECT	H.003931		
DESIGN	M. HEBERT	DETAIL	K. CART
CHECK	K. WERTHER	CHECK	M. HEBERT
REVIEW		SERIES #	2 OF 10

TECHNICAL PROPOSAL PLANS
PRELIMINARY
NOT FOR CONSTRUCTION
ENGINEER:
KATHERINE V. WERTHER
LICENSE #:
46868
DATE:
3/9/2023

NO.	DATE	REVISION OR CHANGE ORDER DESCRIPTION	BY

B-14 (RYAN STREET)
APPROACH SLAB DETAILS
I-10 CALCASIEU RIVER BRIDGE IMPROVEMENTS

DOTD LOUISIANA DEPARTMENT OF TRANSPORTATION & DEVELOPMENT
CBP CALCASIEU BRIDGE PARTNERS

TECHNICAL PROPOSAL PLANS
S:\xdrive\HUVAL Projects\7262 (I-10 Calcasieu P3)\05 Drawings\Bridge\02 Border to Print\02-Ryan\Technical Proposal\17-26_Approach Slab Details_Ryan.dgn 3/9/2023 9:36:44 AM

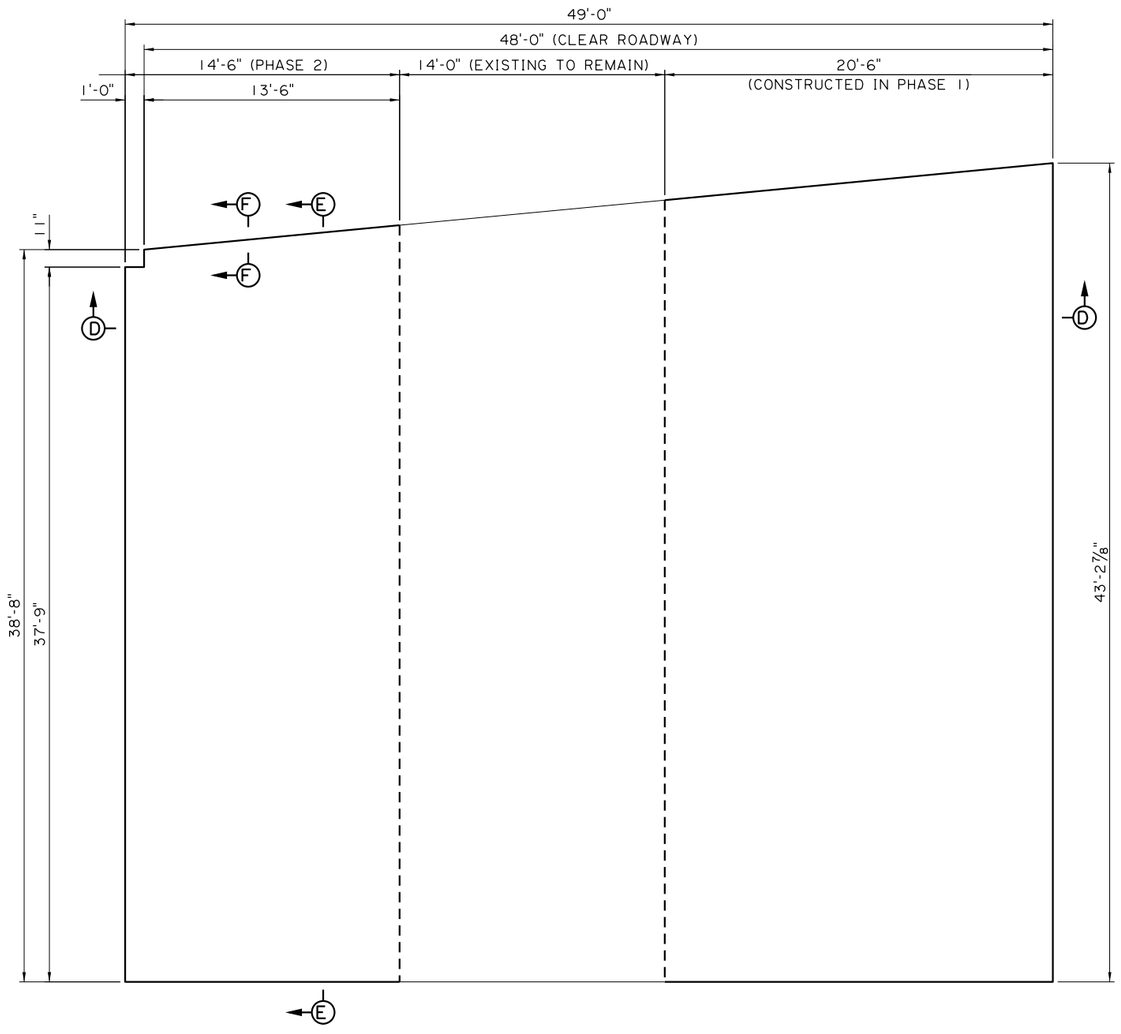

PLAN - PHASE 2 CONSTRUCTION
(WEST END APPROACH)
SCALE: 1/4" = 1'-0"

SHEET NUMBER	233
PARISH	CALCASIEU
CONTROL SECTION	450-91
STATE PROJECT	H.003931
DESIGN	M. HEBERT
CHECK	K. WERTHER
DETAIL	K. CART
CHECK	M. HEBERT
REVIEW	
SERIES •	3 OF 10

TECHNICAL PROPOSAL PLANS
PRELIMINARY
NOT FOR CONSTRUCTION
ENGINEER:
KATHERINE V. WERTHER
LICENSE #:
46868
DATE:
3/9/2023

NO.	DATE	REVISION OR CHANGE ORDER DESCRIPTION	BY

B-14 (RYAN STREET)
APPROACH SLAB DETAILS

I-10 CALCASIEU RIVER BRIDGE IMPROVEMENTS

DOTD LOUISIANA DEPARTMENT OF TRANSPORTATION & DEVELOPMENT

CBP CALCASIEU BRIDGE PARTNERS

TECHNICAL PROPOSAL PLANS
S:\xdrive\HUVAL Projects\7262 (I-10 Calcasieu P3)\05 Drawings\Bridge\02 Border to Prin\02-Ryan\Technical Proposal\17-26_Approach Slab Details_Ryan.dgn
3/9/2023 9:45:25 AM

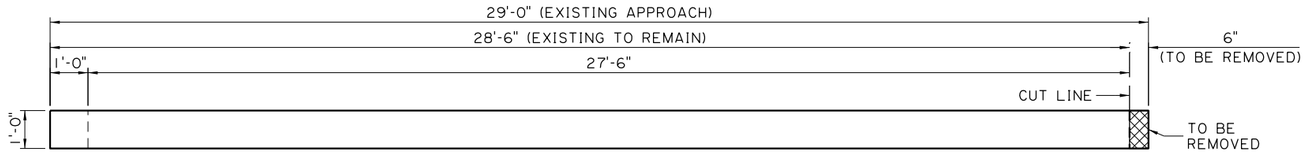

SECTION A-A
SCALE: 1/2" = 1'-0"

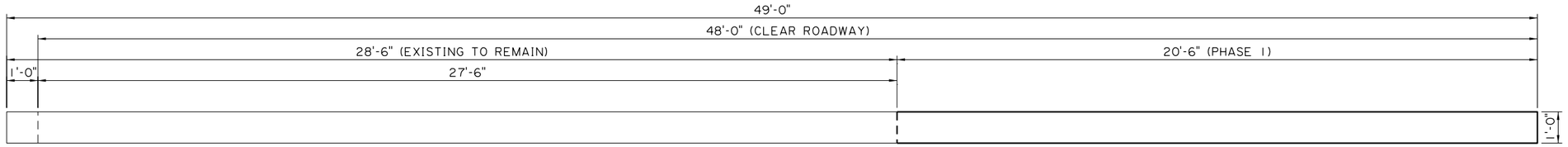

SECTION B-B
SCALE: 1/2" = 1'-0"

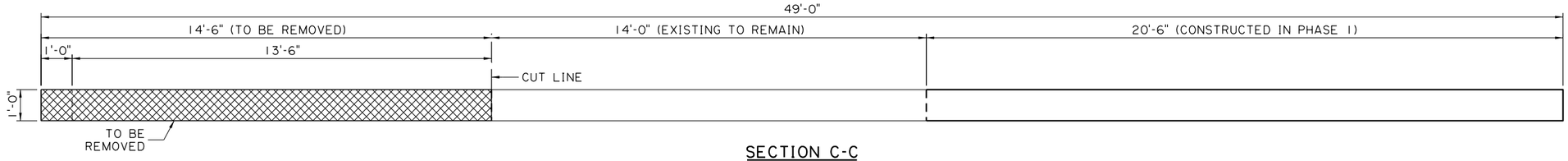

SECTION C-C
SCALE: 1/2" = 1'-0"

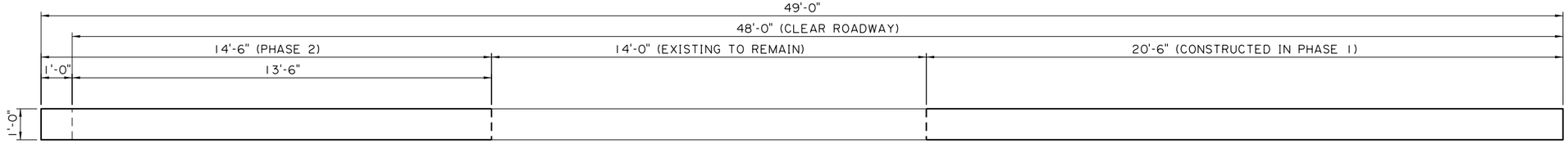

SECTION D-D
SCALE: 1/2" = 1'-0"

SHEET NUMBER 234

PARISH	CONTROL SECTION	STATE PROJECT
CALCASIEU	450-91	H.003931

DESIGN	M. HEBERT	DETAIL	K. CART
CHECK	K. WERTHER	CHECK	M. HEBERT
REVIEW		SERIES	4 OF 10

TECHNICAL PROPOSAL PLANS
PRELIMINARY
NOT FOR CONSTRUCTION
ENGINEER:
KATHERINE V. WERTHER
LICENSE #:
46868
DATE:
3/9/2023

NO.	DATE	REVISION OR CHANGE ORDER DESCRIPTION	BY

B-14 (RYAN STREET)
APPROACH SLAB DETAILS

I-10 CALCASIEU RIVER BRIDGE IMPROVEMENTS

DOTD LOUISIANA DEPARTMENT OF TRANSPORTATION & DEVELOPMENT

CBP CALCASIEU BRIDGE PARTNERS

TECHNICAL PROPOSAL PLANS
S:\xdrive\HUVAL Projects\7262 (I-10 Calcasieu P3)\05 Drawings\Bridge\02 Border to Print\02-Ryan\Technical Proposal\17-26_Approach Slab Details_Ryan.dgn
3/9/2023 9:45:42 AM

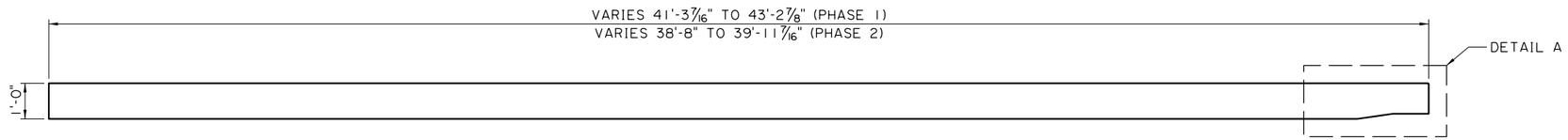

SECTION E-E
SCALE: 1/2" = 1'-0"

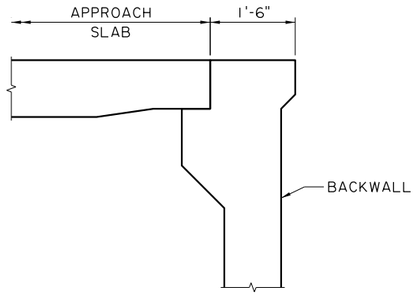

SECTION F-F
SCALE: 3/4" = 1'-0"

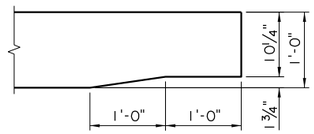

DETAIL A
SCALE: 1" = 1'-0"

SHEET NUMBER	235				
PARISH	CALCASIEU	CONTROL SECTION	450-91	STATE PROJECT	H.003931
DESIGN	M. HEBERT	DETAIL	K. CART	REVIEW	5 OF 10
CHECK	K. WERTHER	CHECK	M. HEBERT	SERIES #	

TECHNICAL PROPOSAL PLANS
PRELIMINARY
NOT FOR CONSTRUCTION
ENGINEER:
KATHERINE V. WERTHER
LICENSE #:
46868
DATE:
3/9/2023

NO.	DATE	REVISION OR CHANGE ORDER DESCRIPTION	BY

STATE OF LOUISIANA
JOHN BEL EDWARDS
GOVERNOR

B-14 (RYAN STREET)
APPROACH SLAB DETAILS

I-10 CALCASIEU RIVER BRIDGE IMPROVEMENTS

DOTD
LOUISIANA DEPARTMENT OF TRANSPORTATION & DEVELOPMENT

CBP
CALCASIEU BRIDGE PARTNERS

TECHNICAL PROPOSAL PLANS

S:\xdrive\HUVAL Projects\7262 (I-10 Calcasieu P3)\05 Drawings\Bridge\02 Border to Print\02-Ryan\Technical Proposal\17-26_Approach Slab Details_Ryan.dgn 3/9/2023 9:46:23 AM

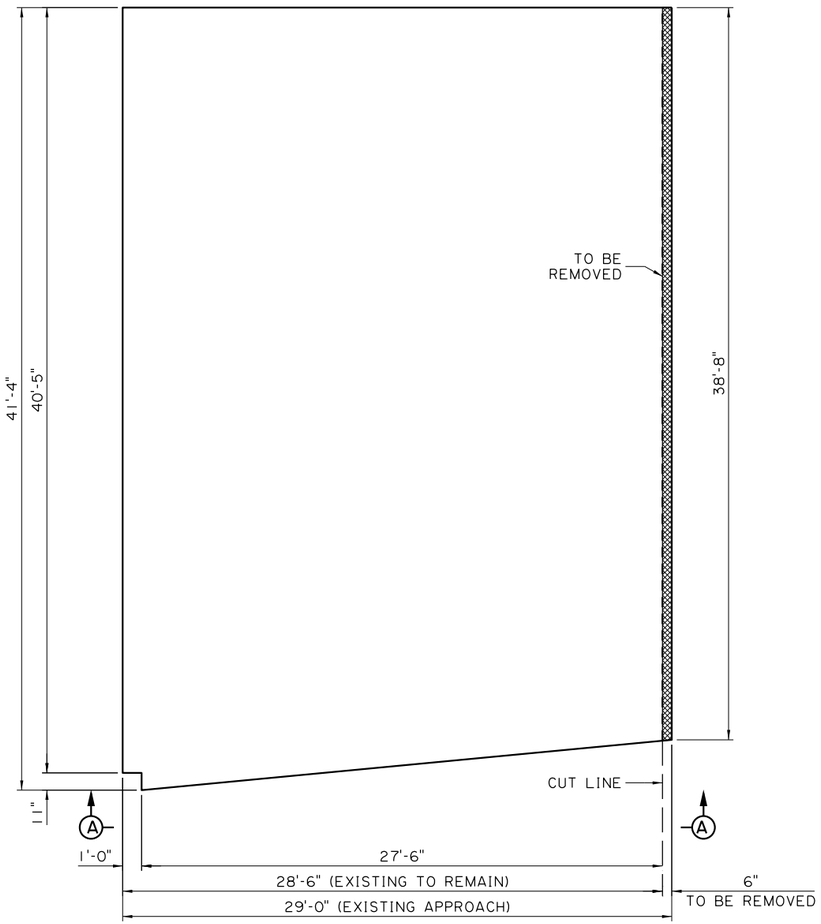

PLAN - PHASE I REMOVAL
(EAST END APPROACH)
SCALE: 1/4" = 1'-0"

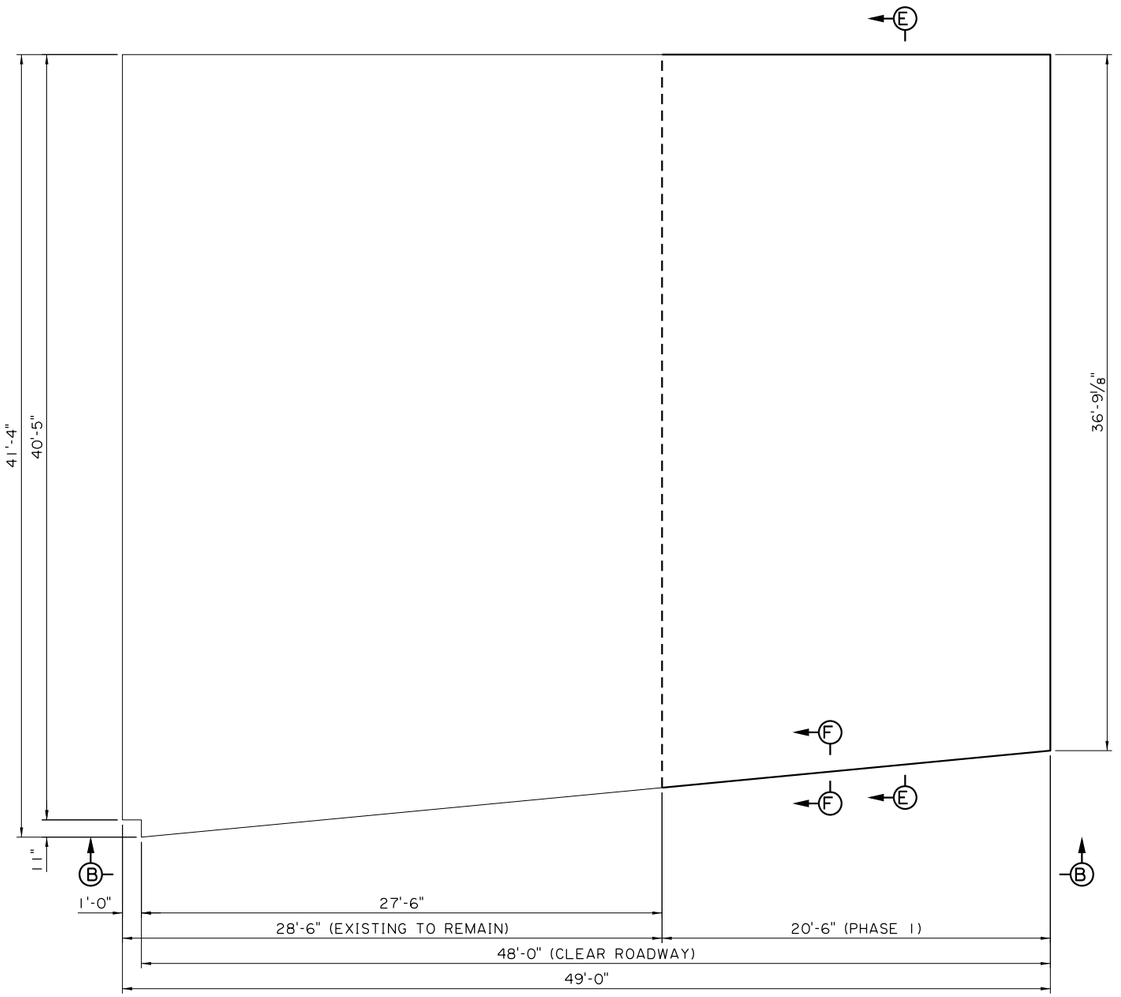

PLAN - PHASE I CONSTRUCTION
(EAST END APPROACH)
SCALE: 1/4" = 1'-0"

SHEET NUMBER	236
PARISH	CALCASIEU
CONTROL SECTION	450-91
STATE PROJECT	H.003931
DESIGN	M. HEBERT
CHECK	K. WERTHER
DETAIL	K. CART
CHECK	M. HEBERT
REVIEW	
SERIES	6 OF 10

TECHNICAL PROPOSAL PLANS
PRELIMINARY
NOT FOR CONSTRUCTION
ENGINEER:
KATHERINE V. WERTHER
LICENSE #:
46868
DATE:
3/9/2023

NO.	DATE	REVISION OR CHANGE ORDER DESCRIPTION	BY

B-14 (RYAN STREET)
APPROACH SLAB DETAILS

I-10 CALCASIEU RIVER BRIDGE IMPROVEMENTS

DOTD LOUISIANA DEPARTMENT OF TRANSPORTATION & DEVELOPMENT

CBP CALCASIEU BRIDGE PARTNERS

TECHNICAL PROPOSAL PLANS

S:\xdrive\HUVAL Projects\7262 (I-10 Calcasieu P3)\05 Drawings\Bridge\02 Border to Print\02-Ryan\Technical Proposal\17-26_Approach Slab Details_Ryan.dgn 3/9/2023 9:46:44 AM

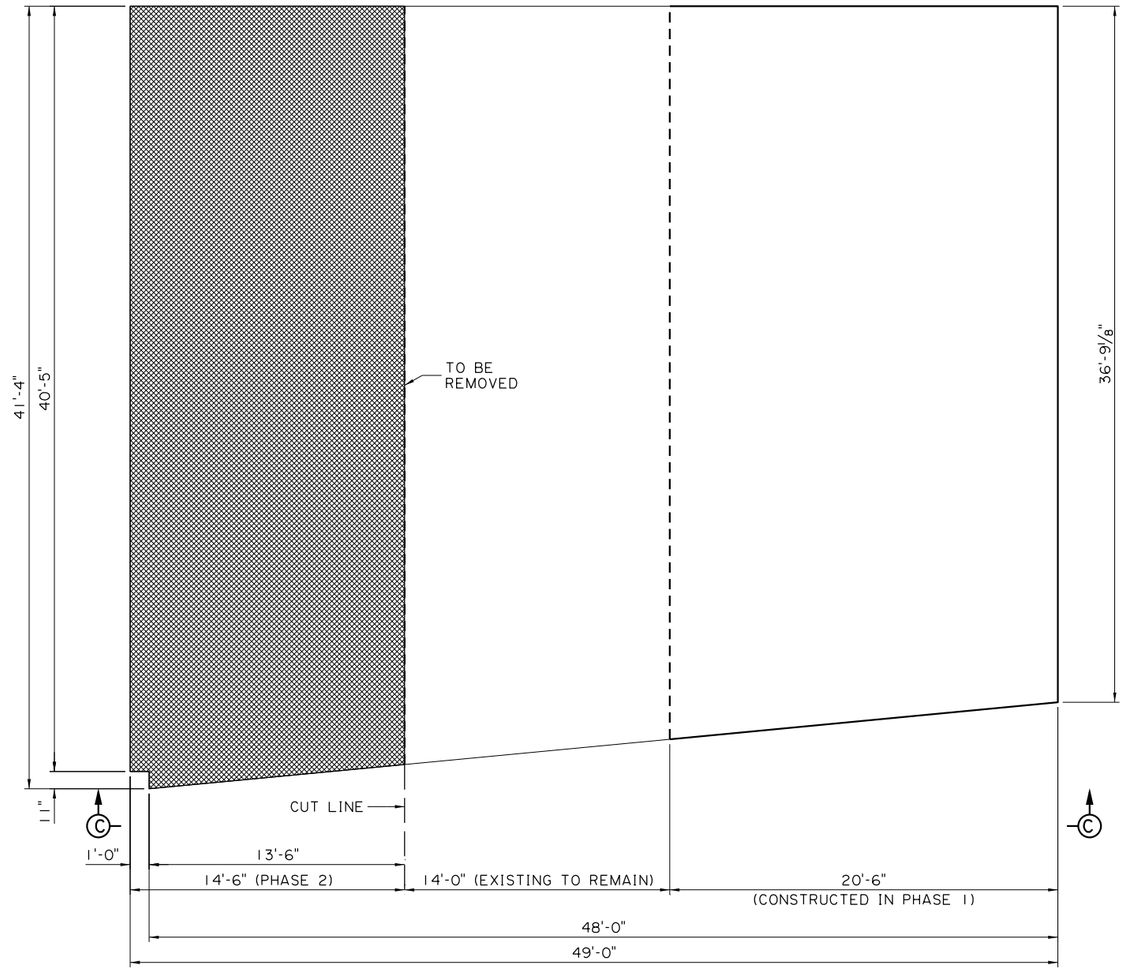

PLAN - PHASE 2 REMOVAL
(EAST END APPROACH)
SCALE: 1/4" = 1'-0"

SHEET NUMBER	237

PARISH	CONTROL SECTION	STATE PROJECT
CALCASIEU	450-91	H.003931

DESIGN	M. HEBERT	DETAIL	K. CART	REVIEW	
CHECK	K. WERTHER	CHECK	M. HEBERT	SERIES #	7 OF 10

TECHNICAL PROPOSAL PLANS
PRELIMINARY
NOT FOR CONSTRUCTION
ENGINEER:
KATHERINE V. WERTHER
LICENSE #:
46868
DATE:
3/9/2023

NO.	DATE	REVISION OR CHANGE ORDER DESCRIPTION	BY

B-14 (RYAN STREET)
APPROACH SLAB DETAILS

I-10 CALCASIEU RIVER BRIDGE IMPROVEMENTS

DOTD LOUISIANA DEPARTMENT OF TRANSPORTATION & DEVELOPMENT

CBP CALCASIEU BRIDGE PARTNERS

TECHNICAL PROPOSAL PLANS

S:\xdrive\HUVAL Projects\7262 (I-10 Calcasieu P3)\05 Drawings\Bridge\02 Border to Print\02-Ryan\Technical Proposal\17-26_Approach Slab Details_Ryan.dgn 3/9/2023 9:47:03 AM

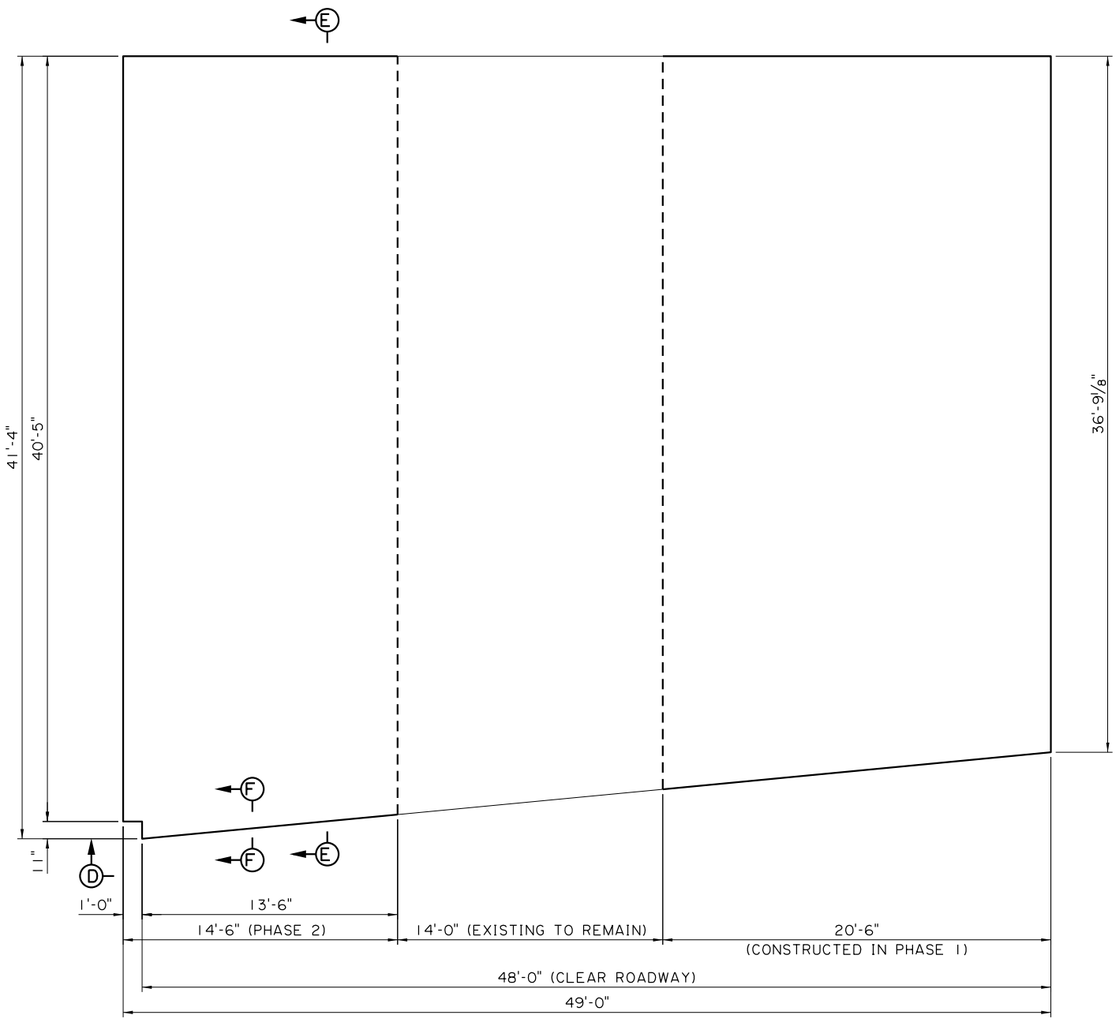

PLAN - PHASE 2 CONSTRUCTION
(EAST END APPROACH)
SCALE: 1/4" = 1'-0"

SHEET NUMBER 238

PARISH	CONTROL SECTION	STATE PROJECT
CALCASIEU	450-91	H.003931

DESIGN	M. HEBERT	DETAIL	K. CART	REVIEW
CHECK	K. WERTHER	CHECK	M. HEBERT	SERIES • 8 OF 10

TECHNICAL PROPOSAL PLANS
PRELIMINARY
NOT FOR CONSTRUCTION
ENGINEER:
KATHERINE V. WERTHER
LICENSE #:
46868
DATE:
3/9/2023

NO.	DATE	REVISION OR CHANGE ORDER DESCRIPTION	BY

B-14 (RYAN STREET)
APPROACH SLAB DETAILS

I-10 CALCASIEU RIVER BRIDGE IMPROVEMENTS

DOTD LOUISIANA DEPARTMENT OF TRANSPORTATION & DEVELOPMENT

CBP CALCASIEU BRIDGE PARTNERS

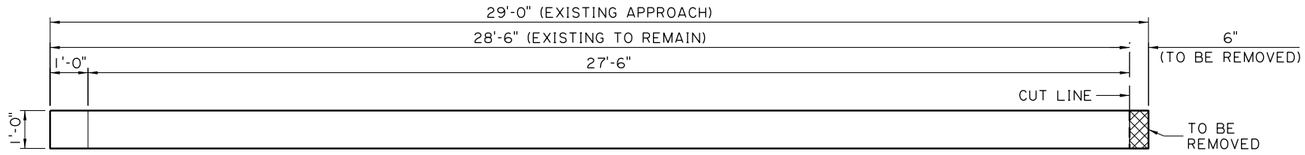

SECTION A-A
SCALE: ½" = 1'-0"

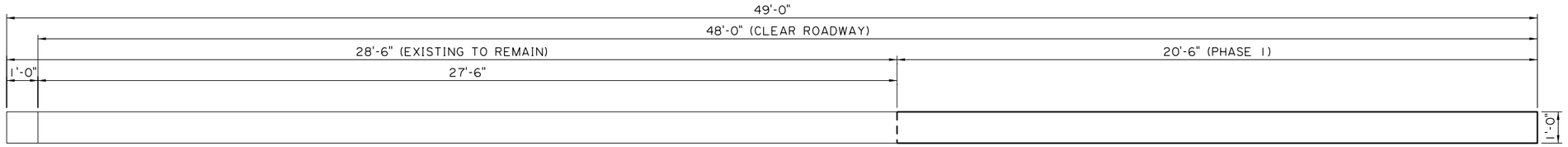

SECTION B-B
SCALE: ½" = 1'-0"

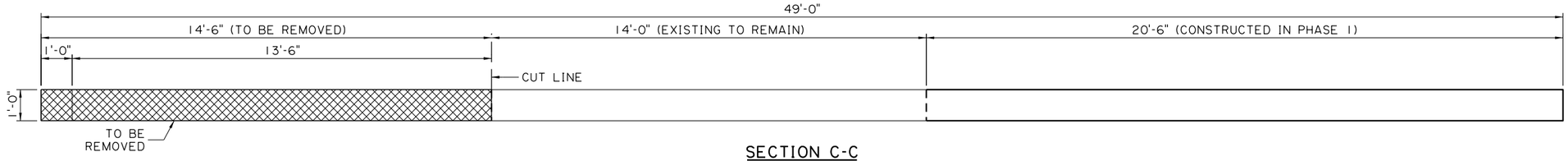

SECTION C-C
SCALE: ½" = 1'-0"

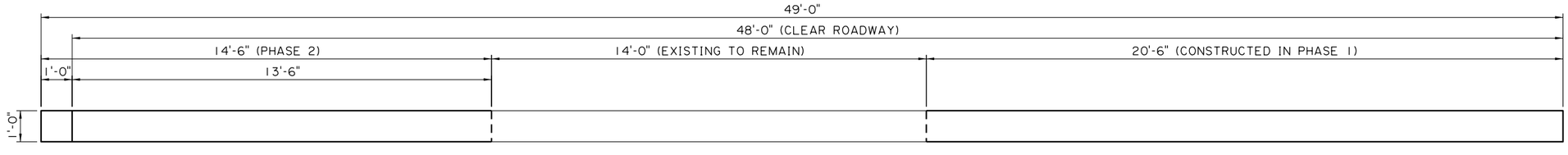

SECTION D-D
SCALE: ½" = 1'-0"

TECHNICAL PROPOSAL PLANS

S:\xdrive\HUVAL Projects\7262 (I-10 Calcasieu P3)\05 Drawings\Bridge\02 Border to Prin\02-Ryan\Technical Proposal\17-26_Approach Slab Details_Ryan.dgn 3/9/2023 9:47:19 AM

SHEET NUMBER 239

PARISH	CONTROL SECTION	STATE PROJECT
CALCASIEU	450-91	H.003931

DESIGN	CHECK	DETAIL	CHECK	REVIEW	SERIES
M. HEBERT	K. WERTHER	K. CART	M. HEBERT		9 OF 10

TECHNICAL PROPOSAL PLANS
PRELIMINARY
NOT FOR CONSTRUCTION
ENGINEER:
KATHERINE V. WERTHER
LICENSE #:
46868
DATE:
3/9/2023

NO.	DATE	REVISION OR CHANGE ORDER DESCRIPTION	BY

B-14 (RYAN STREET)
APPROACH SLAB DETAILS

I-10 CALCASIEU RIVER BRIDGE IMPROVEMENTS

DOTD LOUISIANA DEPARTMENT OF TRANSPORTATION & DEVELOPMENT

CBP CALCASIEU BRIDGE PARTNERS

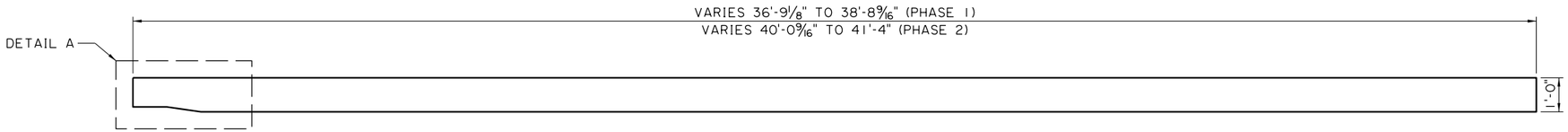

SECTION E-E
SCALE: 1/2" = 1'-0"

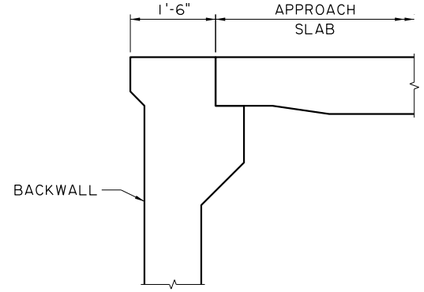

SECTION F-F
SCALE: 3/4" = 1'-0"

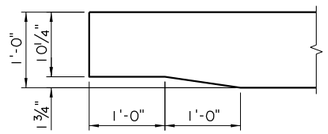

DETAIL A
SCALE: 1" = 1'-0"

TECHNICAL PROPOSAL PLANS

S:\xdrive\HUVAL Projects\7262 (I-10 Calcasieu P3)\05 Drawings\Bridge\02 Border to Print\02-Ryan\Technical Proposal\17-26_Approach Slab Details_Ryan.dgn 3/9/2023 9:47:35 AM

SHEET NUMBER	240

PARISH	CONTROL SECTION	STATE PROJECT
CALCASIEU	450-91	H.003931

DESIGN	M. HEBERT
CHECK	K. WERTHER
DETAIL	K. CART
CHECK	M. HEBERT
REVIEW	
SERIES #	10 OF 10

TECHNICAL PROPOSAL PLANS
PRELIMINARY
NOT FOR CONSTRUCTION
ENGINEER:
KATHERINE V. WERTHER
LICENSE #:
46868
DATE:
3/9/2023

NO.	DATE	REVISION OR CHANGE ORDER DESCRIPTION	BY

STATE OF LOUISIANA
JOHN BEL EDWARDS
GOVERNOR

B-14 (RYAN STREET)
APPROACH SLAB DETAILS

I-10 CALCASIEU RIVER BRIDGE IMPROVEMENTS

DOTD
LOUISIANA DEPARTMENT OF TRANSPORTATION & DEVELOPMENT

CBP
CALCASIEU BRIDGE PARTNERS

TECHNICAL PROPOSAL PLANS
S:\xdrive\HUVAL Projects\7262 (I-10 Calcasieu P3)\05 Drawings\Bridge\02 Border to Print\03-Bilbo\Technical Proposal\3_CP&E_Bilbo.dgn
3/9/2023 9:49:54 AM

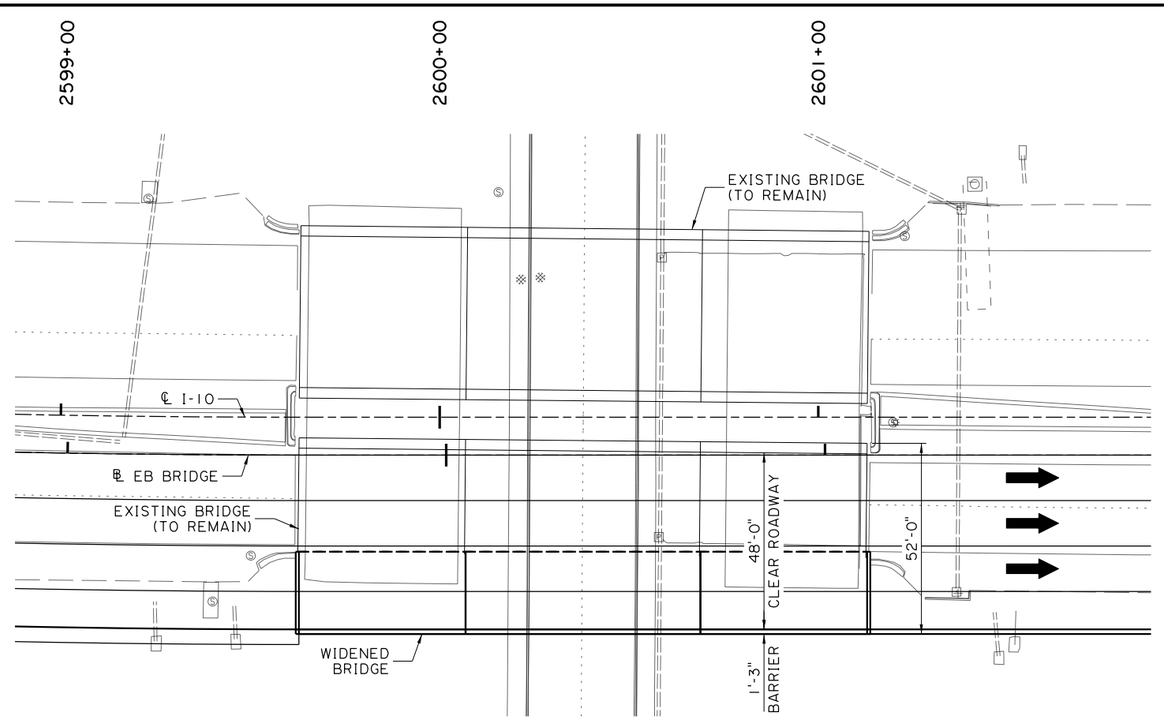

PLAN
SCALE: 1" = 20'-0"

NOTES:

SPAN LENGTHS AND ℄ BENT STATIONS ARE MEASURED ALONG ℄ I-10, PERPENDICULAR TO THE INTERSECTION POINT OF ℄ BENT AND ℄ EB BRIDGE.

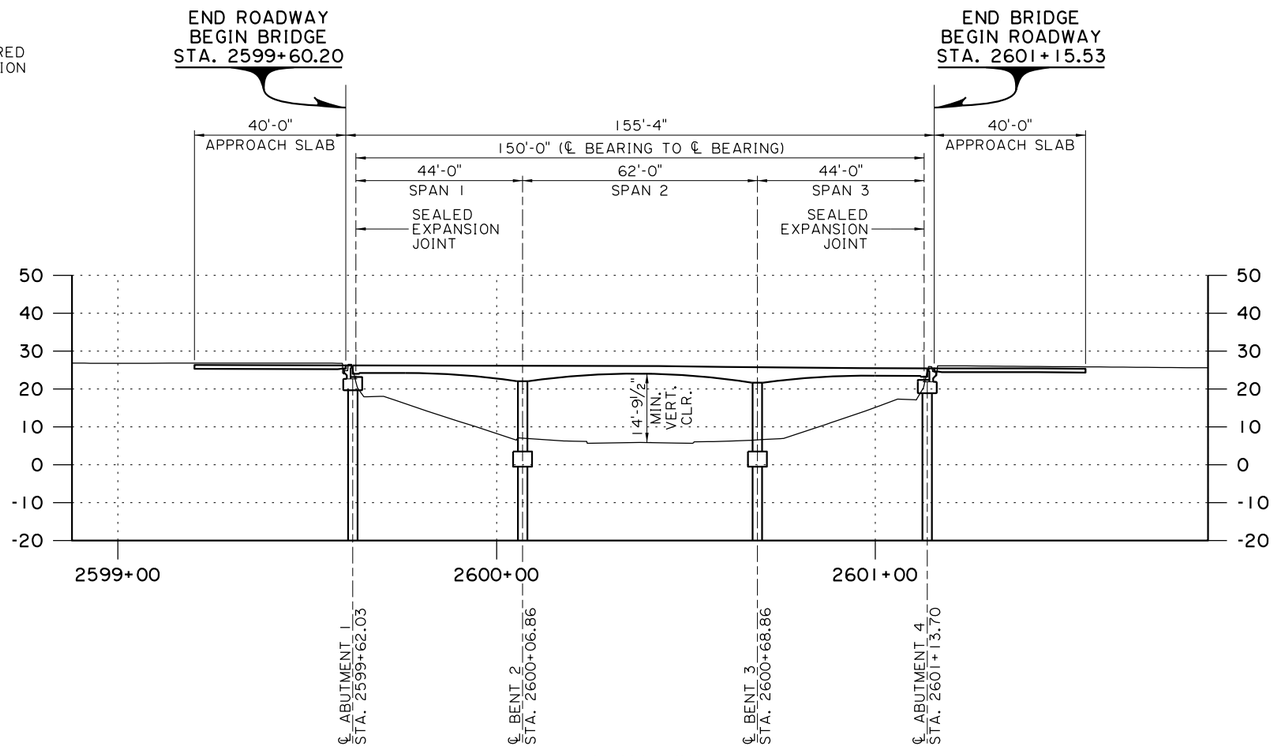

ELEVATION
SCALE: 1" = 20'-0"

SHEET NUMBER 241

PARISH	CONTROL SECTION	STATE PROJECT
CALCASIEU	450-91	H.003931

DESIGN	M. HEBERT
CHECK	K. WERTHER
DETAIL	K. CART
CHECK	M. HEBERT
REVIEW	
SERIES #	

TECHNICAL PROPOSAL PLANS
PRELIMINARY
NOT FOR CONSTRUCTION
ENGINEER:
KATHERINE V. WERTHER
LICENSE #:
46868
DATE:
3/9/2023

NO.	DATE	REVISION OR CHANGE ORDER DESCRIPTION	BY

B-15 (BILBO STREET)
GENERAL PLAN AND ELEVATION
I-10 CALCASIEU RIVER BRIDGE IMPROVEMENTS

DOTD LOUISIANA DEPARTMENT OF TRANSPORTATION & DEVELOPMENT
CBP CALCASIEU BRIDGE PARTNERS

TECHNICAL PROPOSAL PLANS
5/10/2023 3:57:43 PM
S:\xdrive\HUVAL Projects\7262 (I-10 Calcasieu P3)\05 Drawings\Bridge\02 Border to Print\03-Bilbo\4-5_Bridge Sections at Bilbo.dgn

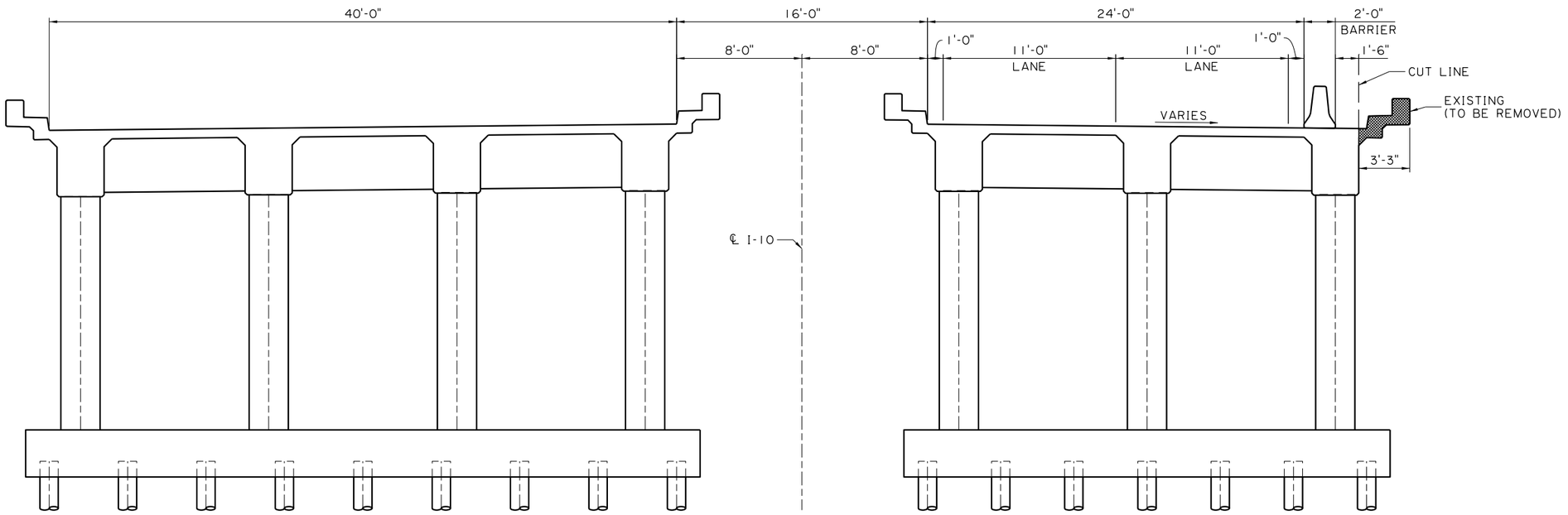

PHASE I REMOVAL
(LOOKING UPSTATION)

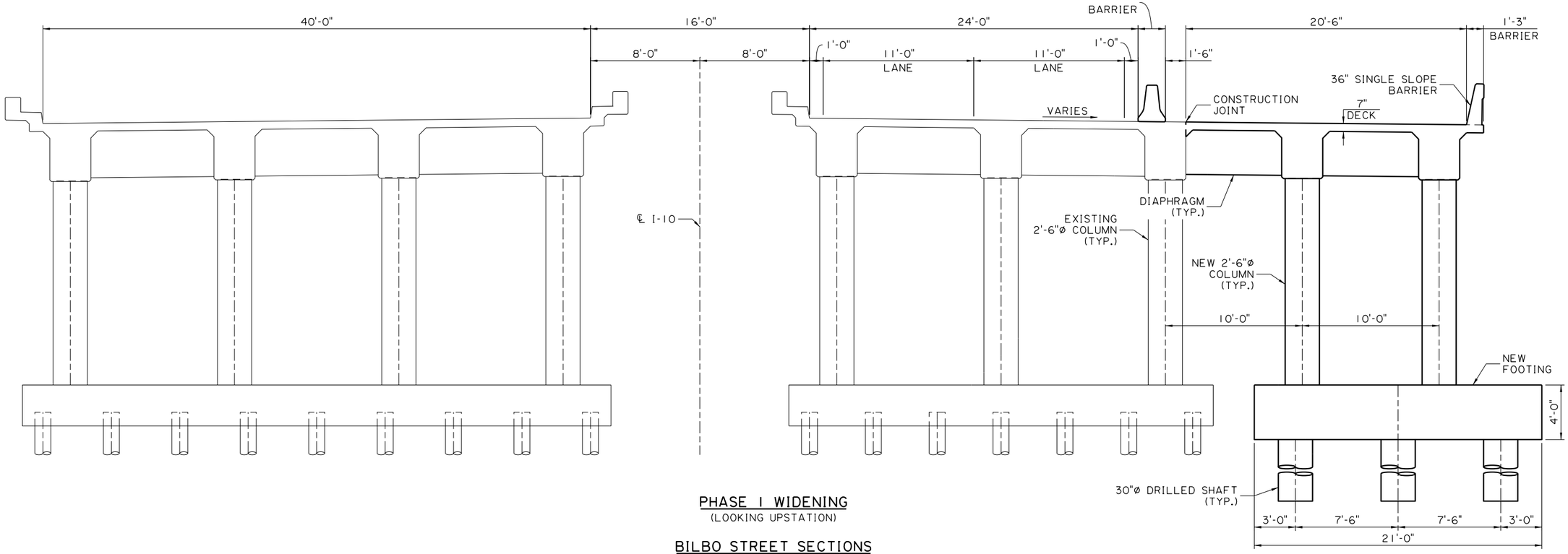

PHASE I WIDENING
(LOOKING UPSTATION)

BILBO STREET SECTIONS
SCALE: 1/4" = 1'-0"

SHEET NUMBER	242

PARISH	CONTROL SECTION	STATE PROJECT
CALCASIEU	450-91	H.003931

DESIGN	M. HEBERT
CHECK	K. WERTHER
DETAIL	K. CART
CHECK	M. HEBERT
REVIEW	
SERIES #	1 OF 2

TECHNICAL PROPOSAL PLANS
PRELIMINARY
NOT FOR CONSTRUCTION
ENGINEER:
MATTHEW L. HEBERT
LICENSE #:
37713
DATE:
5/10/2023

NO.	DATE	REVISION OR CHANGE ORDER DESCRIPTION	BY

B-15 (BILBO STREET)
BRIDGE SECTIONS

I-10 CALCASIEU RIVER BRIDGE IMPROVEMENTS

DOTD LOUISIANA DEPARTMENT OF TRANSPORTATION & DEVELOPMENT

CBP CALCASIEU BRIDGE PARTNERS

TECHNICAL PROPOSAL PLANS
S:\xdrive\HUVAL Projects\7262 (I-10 Calcasieu P3)\05 Drawings\Bridge\02 Border to Print\03-Bilbo\4-5_Bridge Sections at Bilbo.dgn
5/10/2023 3:58:00 PM

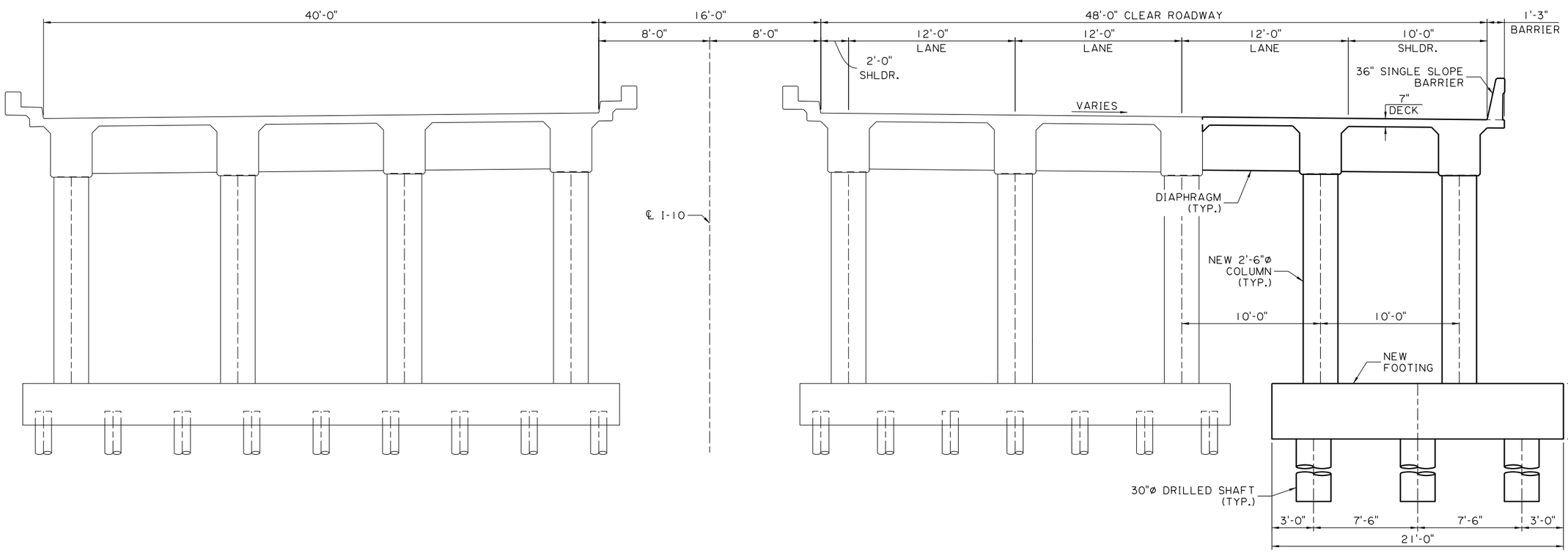

✱FOOTING FOR BENT 2 SHOWN.
SEE FOOTING DETAILS SHEET
FOR INFORMATION ON FOOTING
FOR BENT 3.

BILBO STREET - FINISHED SECTION
(LOOKING UPSTATION)
SCALE: 1/4" = 1'-0"

SHEET NUMBER 243

PARISH	CONTROL SECTION	STATE PROJECT
CALCASIEU	450-91	H.003931

DESIGN	CHECK	DETAIL	CHECK	REVIEW	SERIES
M. HEBERT	K. WERTHER	K. CART	M. HEBERT		2 OF 2

TECHNICAL PROPOSAL PLANS
PRELIMINARY
NOT FOR CONSTRUCTION
ENGINEER:
MATTHEW L. HEBERT
LICENSE #:
37713
DATE:
5/10/2023

NO.	DATE	REVISION OR CHANGE ORDER DESCRIPTION	BY

STATE OF LOUISIANA

B-15 (BILBO STREET)
BRIDGE SECTIONS

I-10 CALCASIEU RIVER BRIDGE IMPROVEMENTS

DOTD LOUISIANA DEPARTMENT OF TRANSPORTATION & DEVELOPMENT

CBP CALCASIEU BRIDGE PARTNERS

TECHNICAL PROPOSAL PLANS

S:\xdrive\HUVAL Projects\7262 (I-10 Calcasieu P3)\05 Drawings\Bridge\02 Border to Print\03-Bilbo\Technical Proposal\6_Foundation Layout_Bilbo.dgn 3/9/2023 9:52:23 AM

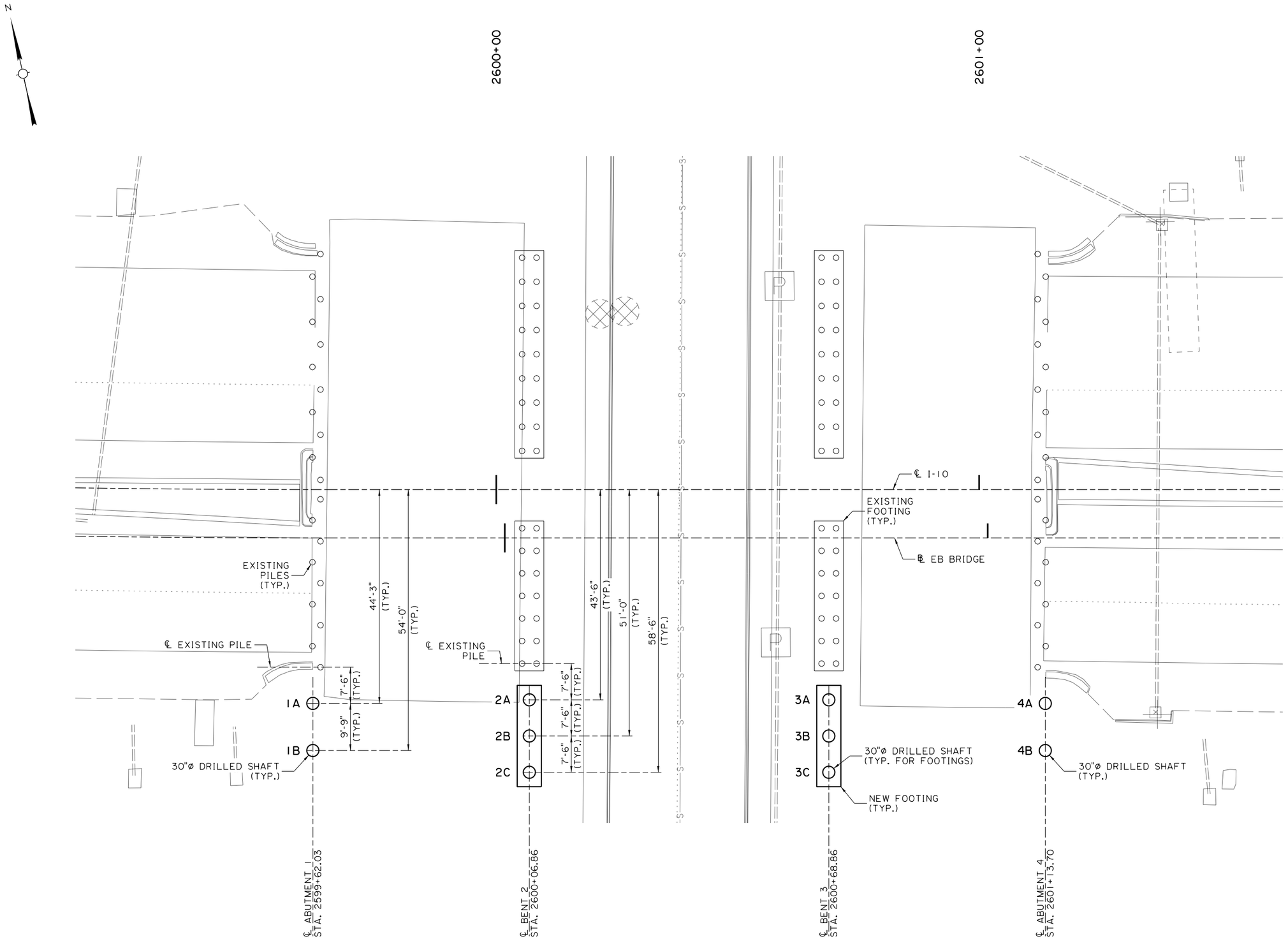

FOUNDATION LAYOUT
SCALE: 1" = 10'-0"

SHEET NUMBER	244
PARISH	CALCASIEU
CONTROL SECTION	450-91
STATE PROJECT	H.003931

DESIGN	M. HEBERT	DETAIL	K. CART	REVIEW	
CHECK	K. WERTHER	CHECK	M. HEBERT	SERIES #	

TECHNICAL PROPOSAL PLANS

PRELIMINARY
NOT FOR CONSTRUCTION

ENGINEER:
KATHERINE V. WERTHER

LICENSE #:
46868

DATE:
3/9/2023

NO.	DATE	REVISION OR CHANGE ORDER DESCRIPTION	BY

STATE OF LOUISIANA

B-15 (BILBO STREET)

FOUNDATION LAYOUT

I-10 CALCASIEU RIVER BRIDGE IMPROVEMENTS

DOTD LOUISIANA DEPARTMENT OF TRANSPORTATION & DEVELOPMENT

CBP CALCASIEU BRIDGE PARTNERS

TECHNICAL PROPOSAL PLANS
S:\xdrive\HUVAL Projects\7262 (I-10 Calcasieu P3)\05 Drawings\Bridge\02 Border to Print\03-Bilbo\Technical Proposal\7_Footing Details_Bilbo.dgn 3/9/2023 9:53:34 AM

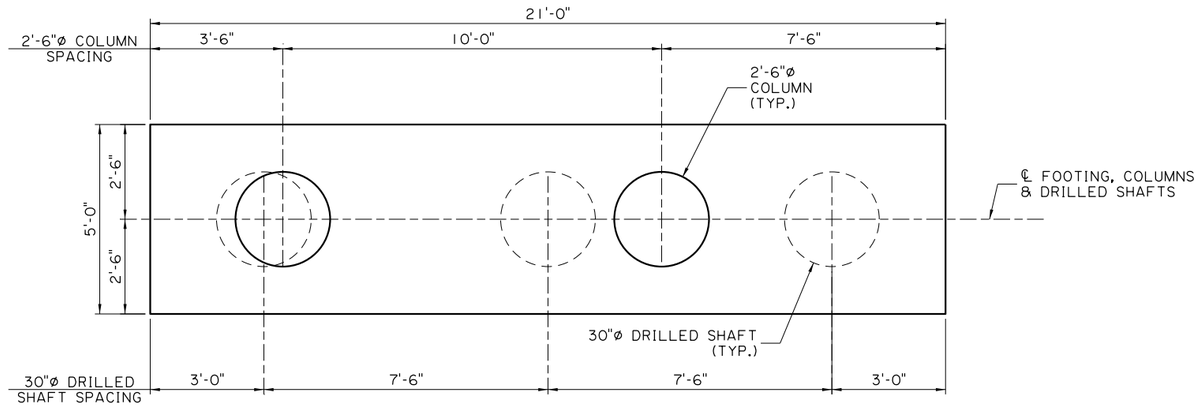

FOOTING - PLAN
SCALE: ½" = 1'-0"

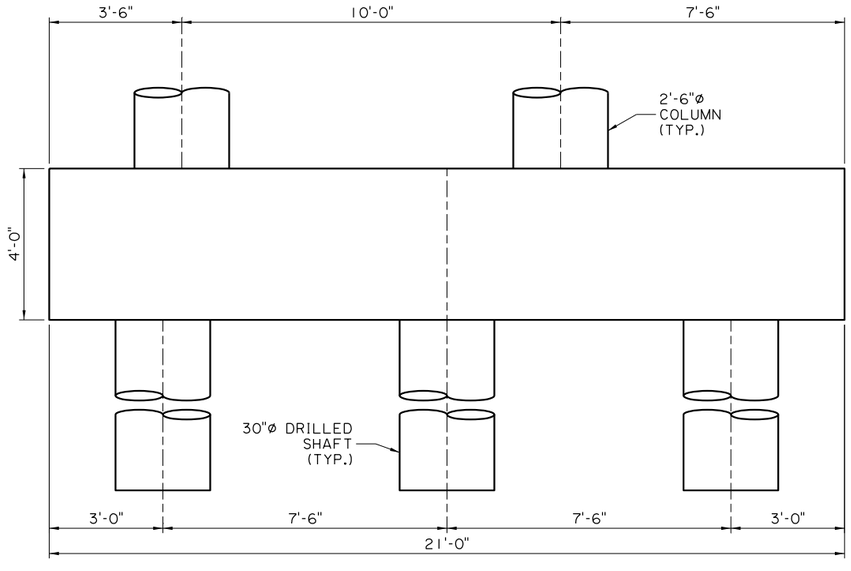

ELEVATION
SCALE: ½" = 1'-0"

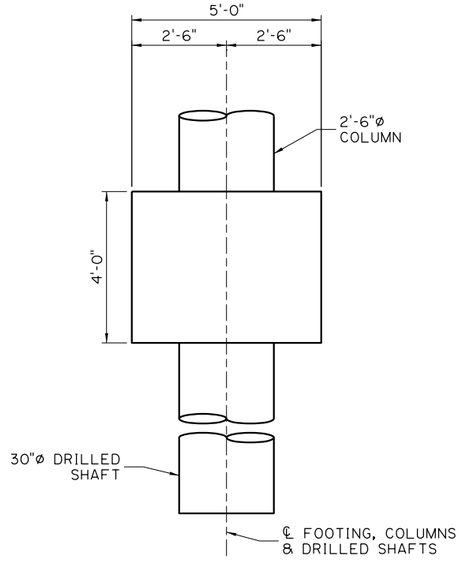

SECTION
SCALE: ½" = 1'-0"

SHEET NUMBER	245
PARISH	CALCASIEU
CONTROL SECTION	450-91
STATE PROJECT	H.003931
DESIGN	M. HEBERT
CHECK	K. WERTHER
DETAIL	K. CART
CHECK	M. HEBERT
REVIEW	
SERIES #	

TECHNICAL PROPOSAL PLANS
PRELIMINARY
NOT FOR CONSTRUCTION
ENGINEER:
KATHERINE V. WERTHER
LICENSE #:
46868
DATE:
3/9/2023

NO.	DATE	REVISION OR CHANGE ORDER DESCRIPTION	BY

B-15 (BILBO STREET)
FOOTING DETAILS
I-10 CALCASIEU RIVER BRIDGE IMPROVEMENTS

LOUISIANA DEPARTMENT OF TRANSPORTATION & DEVELOPMENT
CALCASIEU BRIDGE PARTNERS

TECHNICAL PROPOSAL PLANS
S:\xdrive\HUVAL Projects\7262 (I-10 Calcasieu P3)\05 Drawings\Bridge\02 Border to Print\03-Bilbo\Technical Proposal\8_Abutment Removal Details_Bilbo.dgn 3/9/2023 9:55:45 AM

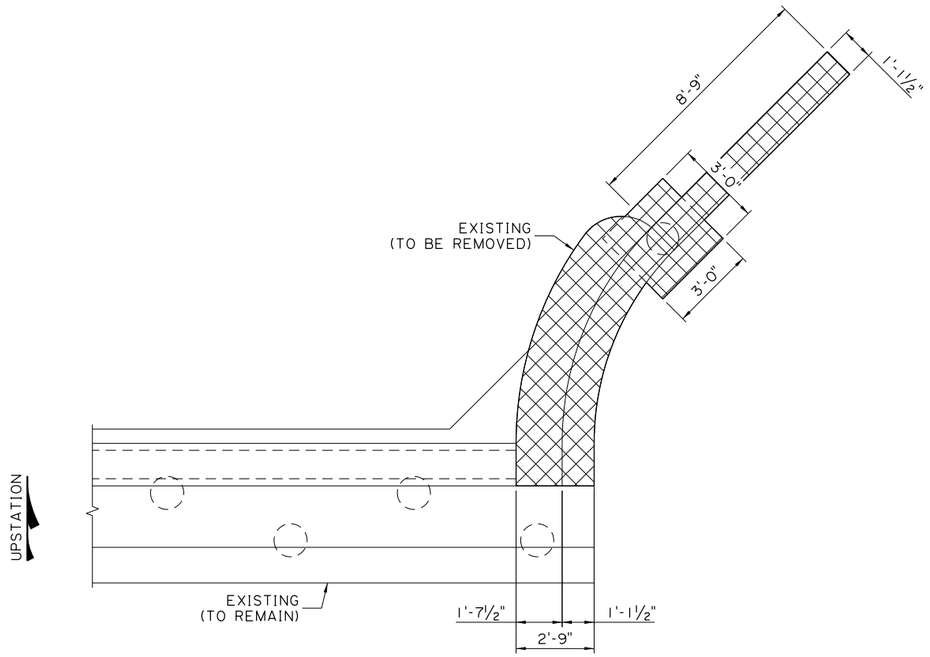

REMOVAL - PLAN

(ABUTMENT 4 SHOWN) (ABUTMENT 1 SIMILAR)
SCALE: ⅜" = 1'-0"

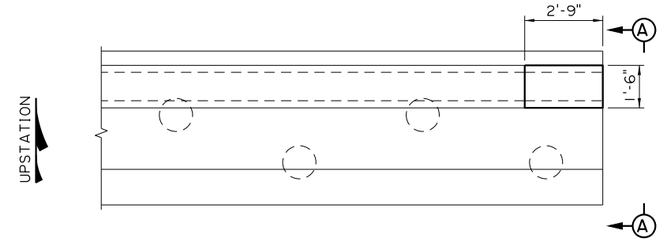

NEW CONSTRUCTION - PLAN

(ABUTMENT 4 SHOWN) (ABUTMENT 1 SIMILAR)
SCALE: ⅜" = 1'-0"

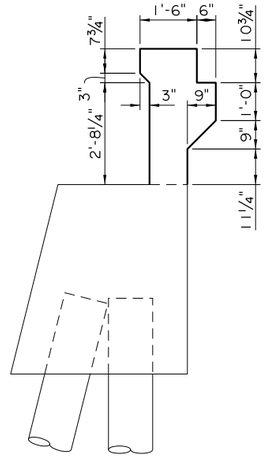

SECTION A-A

SCALE: ½" = 1'-0"

SHEET NUMBER	246
PARISH	CALCASIEU
CONTROL SECTION	450-91
STATE PROJECT	H.003931
DESIGN	M. HEBERT
CHECK	K. WERTHER
DETAIL	K. CART
CHECK	M. HEBERT
REVIEW	
SERIES #	

TECHNICAL PROPOSAL PLANS
PRELIMINARY
NOT FOR CONSTRUCTION
ENGINEER:
KATHERINE V. WERTHER
LICENSE #: 46868
DATE: 3/9/2023

NO.	DATE	REVISION OR CHANGE ORDER	BY

STATE OF LOUISIANA

B-15 (BILBO STREET)
ABUTMENT REMOVAL DETAILS

I-10 CALCASIEU RIVER BRIDGE IMPROVEMENTS

DOTD LOUISIANA DEPARTMENT OF TRANSPORTATION & DEVELOPMENT

CBP CALCASIEU BRIDGE PARTNERS

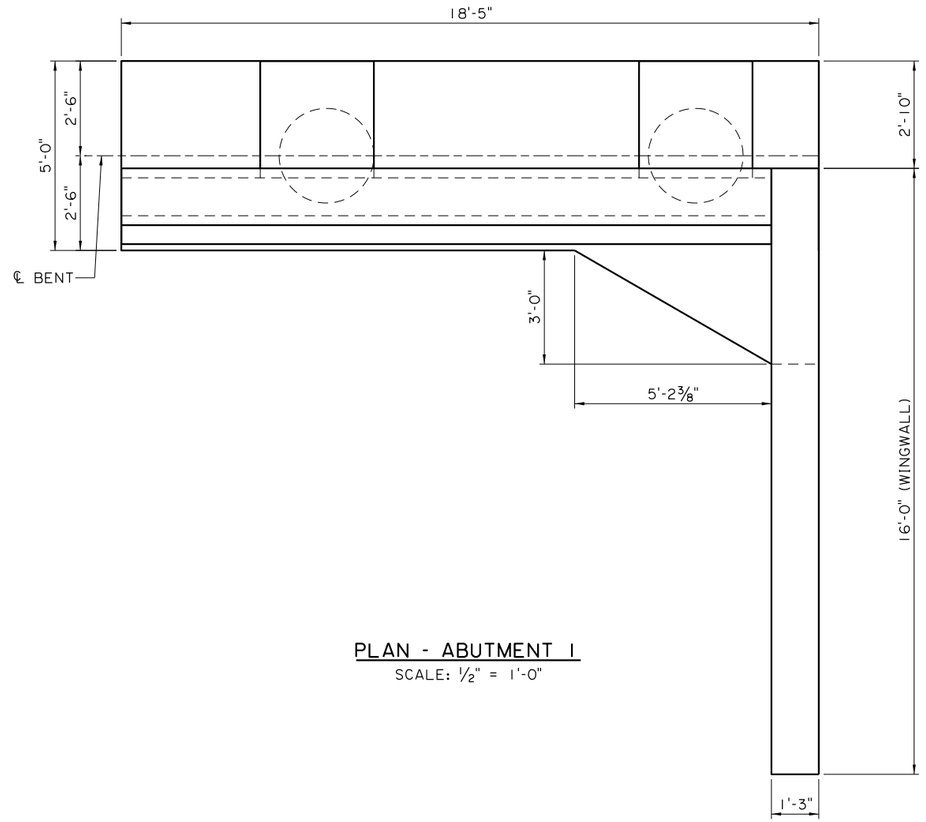

PLAN - ABUTMENT 1

SCALE: 1/2" = 1'-0"

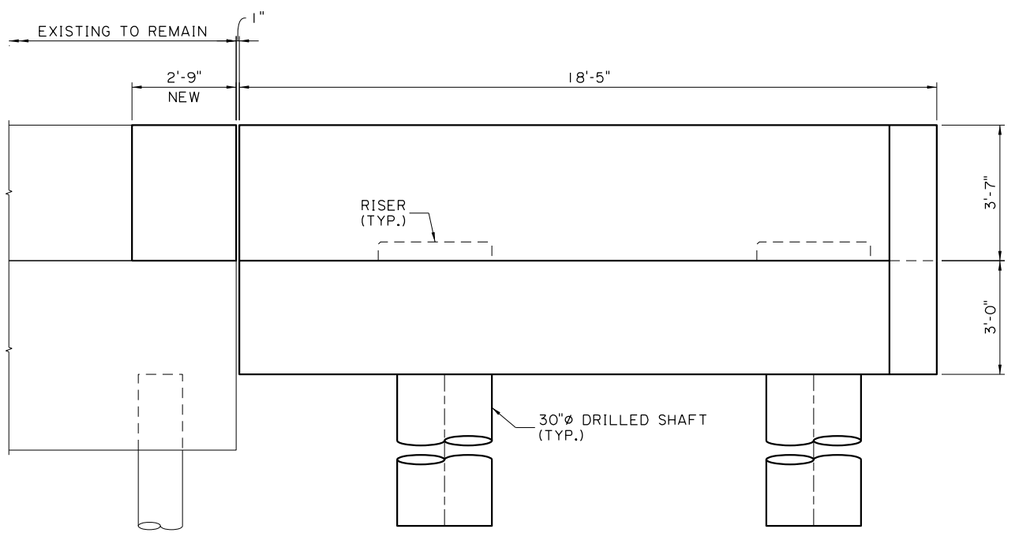

ELEVATION - ABUTMENT 1

SCALE: 1/4" = 1'-0"

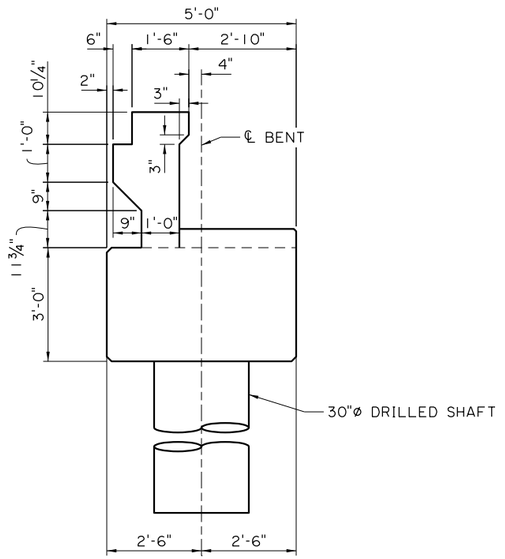

SECTION

SCALE: 1/2" = 1'-0"

TECHNICAL PROPOSAL PLANS

S:\xdrive\HUVAL Projects\7262 (I-10 Calcasieu P3)\05 Drawings\Bridge\02 Border to Print\03-Bilbo\Technical Proposal\9_Abutment 1 Details_Bilbo (1 of 2).dgn 3/9/2023 9:56:35 AM

SHEET NUMBER 247

PARISH	CONTROL SECTION	STATE PROJECT
CALCASIEU	450-91	H.003931

DESIGN	M. HEBERT	DETAIL	K. CART	REVIEW
CHECK	K. WERTHER	CHECK	M. HEBERT	SERIES 1 OF 2

TECHNICAL PROPOSAL PLANS

PRELIMINARY

NOT FOR CONSTRUCTION

ENGINEER:
KATHERINE V. WERTHER

LICENSE #:
46868

DATE:
3/9/2023

NO.	DATE	REVISION OR CHANGE ORDER DESCRIPTION	BY

B-15 (BILBO STREET)

ABUTMENT 1 DETAILS

I-10 CALCASIEU RIVER BRIDGE IMPROVEMENTS

LOUISIANA DEPARTMENT OF TRANSPORTATION & DEVELOPMENT

CALCASIEU BRIDGE PARTNERS

TECHNICAL PROPOSAL PLANS
S:\xdrive\HUVAL Projects\7262 (I-10 Calcasieu P3)\05 Drawings\Bridge\02 Border to Print\03-Bilbo\Technical Proposal\10_Abutment 1 Details_Bilbo (2 of 2).dgn 3/9/2023 9:57:14 AM

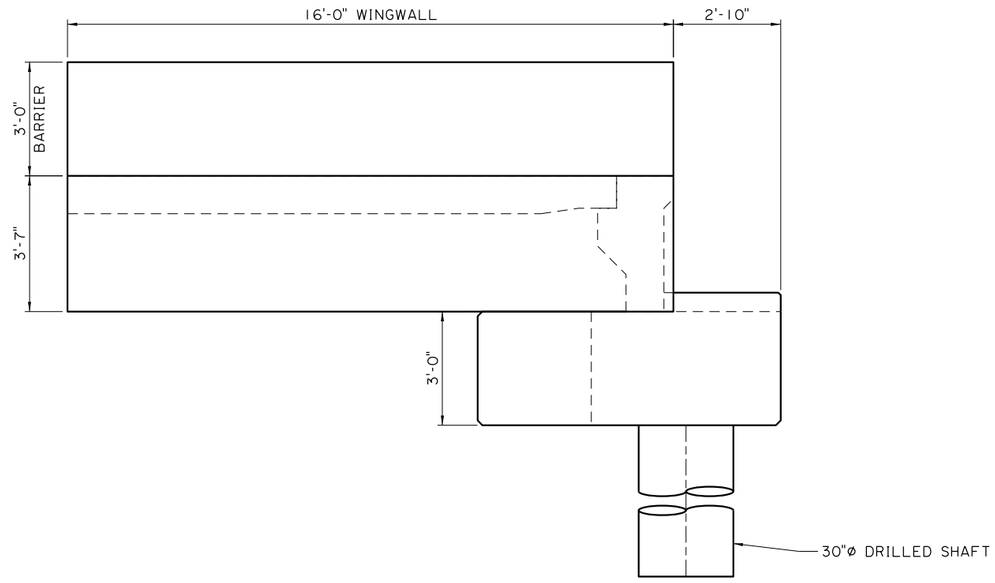

WINGWALL
SCALE: 1/2" = 1'-0"

SHEET NUMBER	248
PARISH	CALCASIEU
CONTROL SECTION	450-91
STATE PROJECT	H.003931
DESIGN	M. HEBERT
CHECK	K. WERTHER
DETAIL	K. CART
CHECK	M. HEBERT
REVIEW	
SERIES #	2 OF 2

TECHNICAL PROPOSAL PLANS
PRELIMINARY
NOT FOR CONSTRUCTION
ENGINEER:
KATHERINE V. WERTHER
LICENSE #:
46868
DATE:
3/9/2023

NO.	DATE	REVISION OR CHANGE ORDER DESCRIPTION	BY

B-15 (BILBO STREET)
ABUTMENT 1 DETAILS

I-10 CALCASIEU RIVER BRIDGE IMPROVEMENTS

DOTD LOUISIANA DEPARTMENT OF TRANSPORTATION & DEVELOPMENT

CBP CALCASIEU BRIDGE PARTNERS

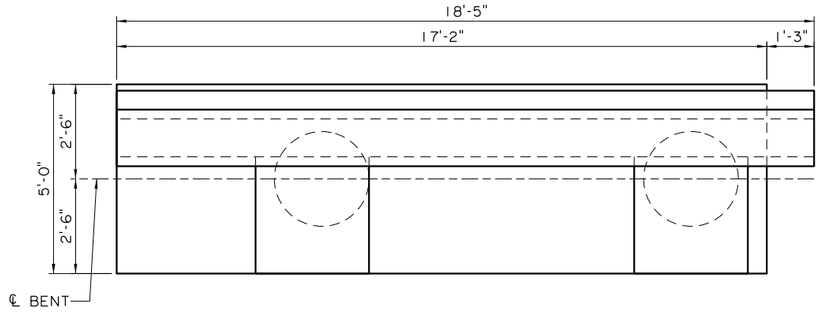

PLAN - ABUTMENT 4

SCALE: 1/2" = 1'-0"

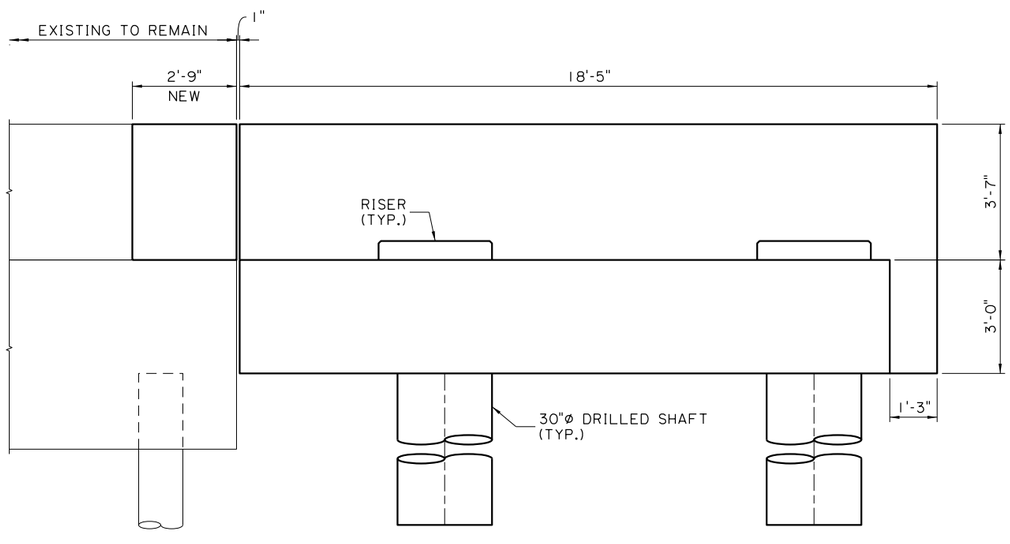

ELEVATION - ABUTMENT 4

SCALE: 1/4" = 1'-0"

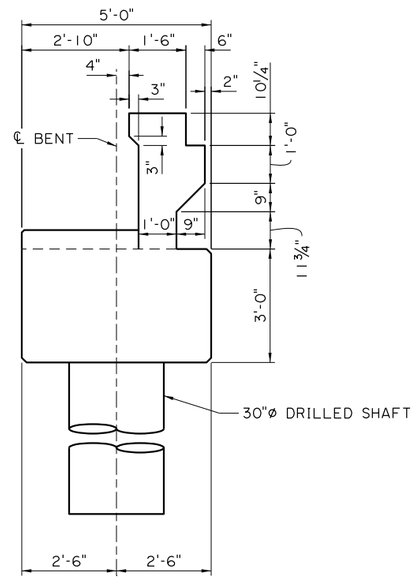

SIDE

SCALE: 1/2" = 1'-0"

TECHNICAL PROPOSAL PLANS

S:\xdrive\HUVAL Projects\7262 (I-10 Calcasieu P3)\05 Drawings\Bridge\02 Border to Print\03-Bilbo\Technical Proposal\11_Abutment 4 Details_Bilbo.dgn 3/9/2023 9:58:01 AM

SHEET NUMBER	249
PARISH	CALCASIEU
CONTROL SECTION	450-91
STATE PROJECT	H.003931
DESIGN	M. HEBERT
CHECK	K. WERTHER
DETAIL	K. CART
CHECK	M. HEBERT
REVIEW	
SERIES #	

TECHNICAL PROPOSAL PLANS

PRELIMINARY
NOT FOR CONSTRUCTION

ENGINEER:
KATHERINE V. WERTHER

LICENSE #:
46868

DATE:
3/9/2023

NO.	DATE	REVISION OR CHANGE ORDER	BY

B-15 (BILBO STREET)
ABUTMENT 4 DETAILS

I-10 CALCASIEU RIVER BRIDGE IMPROVEMENTS

DOTD LOUISIANA DEPARTMENT OF TRANSPORTATION & DEVELOPMENT

CBP CALCASIEU BRIDGE PARTNERS

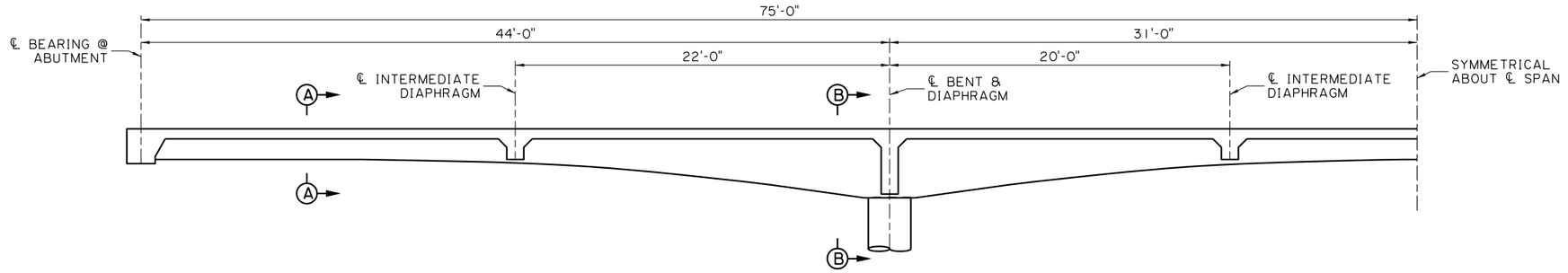

EXTERIOR GIRDER ELEVATION
SCALE: 1/4" = 1'-0"

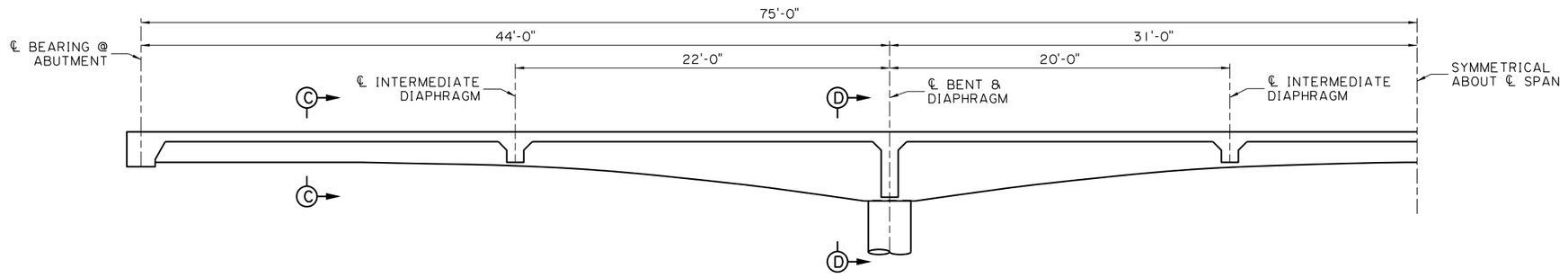

INTERIOR GIRDER ELEVATION
SCALE: 1/4" = 1'-0"

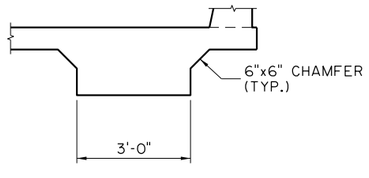

SECTION A-A
SCALE: 1/2" = 1'-0"

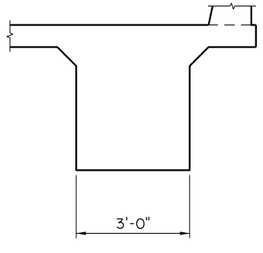

SECTION B-B
SCALE: 1/2" = 1'-0"

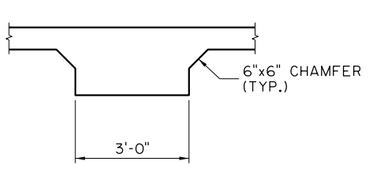

SECTION C-C
SCALE: 1/2" = 1'-0"

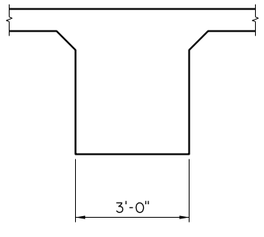

SECTION D-D
SCALE: 1/2" = 1'-0"

TECHNICAL PROPOSAL PLANS

S:\Xdrive\HUVAL Projects\7262 (I-10 Calcasieu P3)\05 Drawings\Bridge\02 Border to Print\03-Bilbo\Technical Proposal\12_Girder Details_Bilbo.dgn 3/9/2023 9:58:49 AM

SHEET NUMBER	250
PARISH	CALCASIEU
CONTROL SECTION	450-91
STATE PROJECT	H.003931
DESIGN	M. HEBERT
CHECK	K. WERTHER
DETAIL	K. CART
CHECK	M. HEBERT
REVIEW	
SERIES	1 OF 2

TECHNICAL PROPOSAL PLANS
PRELIMINARY
NOT FOR CONSTRUCTION
ENGINEER:
KATHERINE V. WERTHER
LICENSE #:
46868
DATE:
3/9/2023

NO.	DATE	REVISION OR CHANGE ORDER DESCRIPTION	BY

B-15 (BILBO STREET)
GIRDER DETAILS

I-10 CALCASIEU RIVER BRIDGE IMPROVEMENTS

LOUISIANA DEPARTMENT OF TRANSPORTATION & DEVELOPMENT

CALCASIEU BRIDGE PARTNERS

TECHNICAL PROPOSAL PLANS
S:\xdrive\HUVAL Projects\7262 (I-10 Calcasieu P3)\05 Drawings\Bridge\02 Border to Print\03-Bilbo\Technical Proposal\12_Girder Details_Bilbo.dgn
3/9/2023 9:59:07 AM

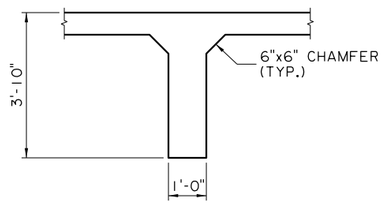

DIAPHRAGM DETAIL
(AT ℄ BENT)
SCALE: ½" = 1'-0"

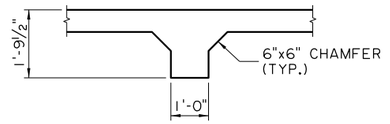

INTERMEDIATE DIAPHRAGM DETAIL
SCALE: ½" = 1'-0"

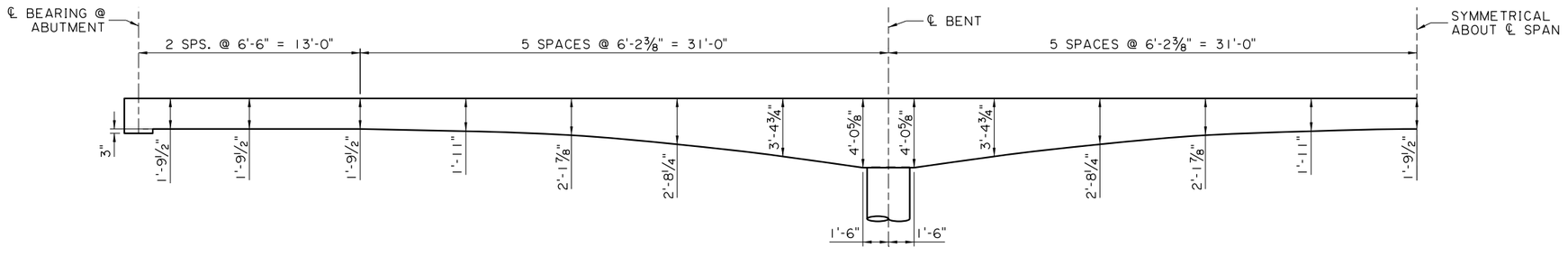

GIRDER GEOMETRICS
SCALE: ¼" = 1'-0"

SHEET NUMBER	251
PARISH	CALCASIEU
CONTROL SECTION	450-91
STATE PROJECT	H.003931
DESIGN	M. HEBERT
CHECK	K. WERTHER
DETAIL	K. CART
CHECK	M. HEBERT
REVIEW	
SERIES #	2 OF 2

TECHNICAL PROPOSAL PLANS
PRELIMINARY
NOT FOR CONSTRUCTION
ENGINEER:
KATHERINE V. WERTHER
LICENSE #:
46868
DATE:
3/9/2023

NO.	DATE	REVISION OR CHANGE ORDER DESCRIPTION	BY

B-15 (BILBO STREET)
GIRDER DETAILS

I-10 CALCASIEU RIVER BRIDGE IMPROVEMENTS

DOTD LOUISIANA DEPARTMENT OF TRANSPORTATION & DEVELOPMENT

CBP CALCASIEU BRIDGE PARTNERS

TECHNICAL PROPOSAL PLANS
S:\xdrive\HUVAL Projects\7262 (I-10 Calcasieu P3)\05 Drawings\Bridge\02 Border to Print\03-Bilbo\Technical Proposal\14-22_Approach Slab Details_Bilbo.dgn 3/9/2023 10:00:33 AM

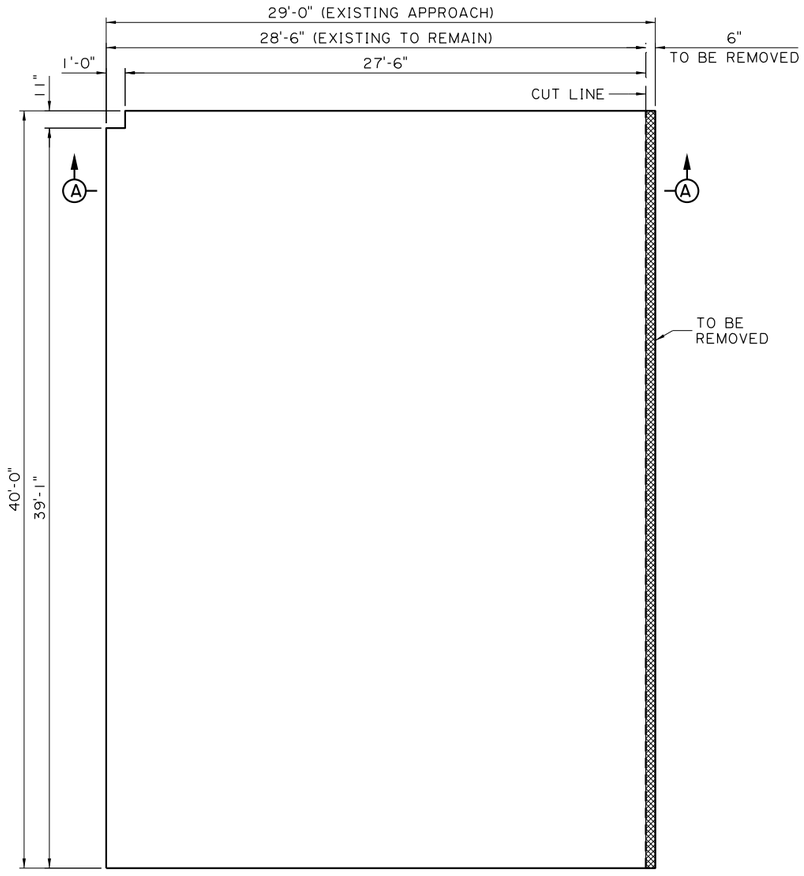

PLAN - PHASE I REMOVAL
(WEST END APPROACH)
SCALE: 1/4" = 1'-0"

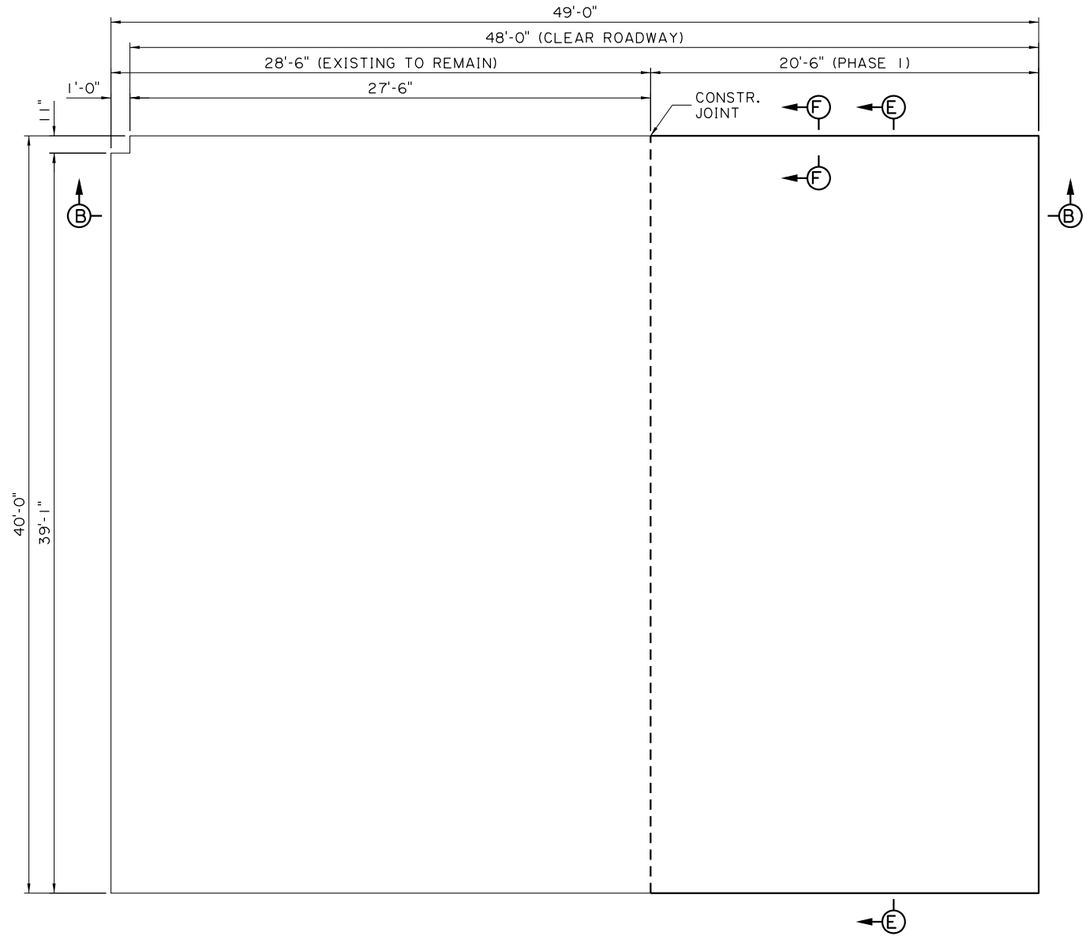

PLAN - PHASE I CONSTRUCTION
(WEST END APPROACH)
SCALE: 1/4" = 1'-0"

SHEET NUMBER	252
PARISH	CALCASIEU
CONTROL SECTION	450-91
STATE PROJECT	H.003931
DESIGN M. HEBERT	CHECK K. WERTHER
DETAIL K. CART	CHECK M. HEBERT
REVIEW	SERIES • 1 OF 9

TECHNICAL PROPOSAL PLANS
PRELIMINARY
NOT FOR CONSTRUCTION
ENGINEER:
KATHERINE V. WERTHER
LICENSE #:
46868
DATE:
3/9/2023

NO.	DATE	REVISION OR CHANGE ORDER DESCRIPTION	BY

B-15 (BILBO STREET)
APPROACH SLAB DETAILS
I-10 CALCASIEU RIVER BRIDGE IMPROVEMENTS

DOTD LOUISIANA DEPARTMENT OF TRANSPORTATION & DEVELOPMENT
CBP CALCASIEU BRIDGE PARTNERS

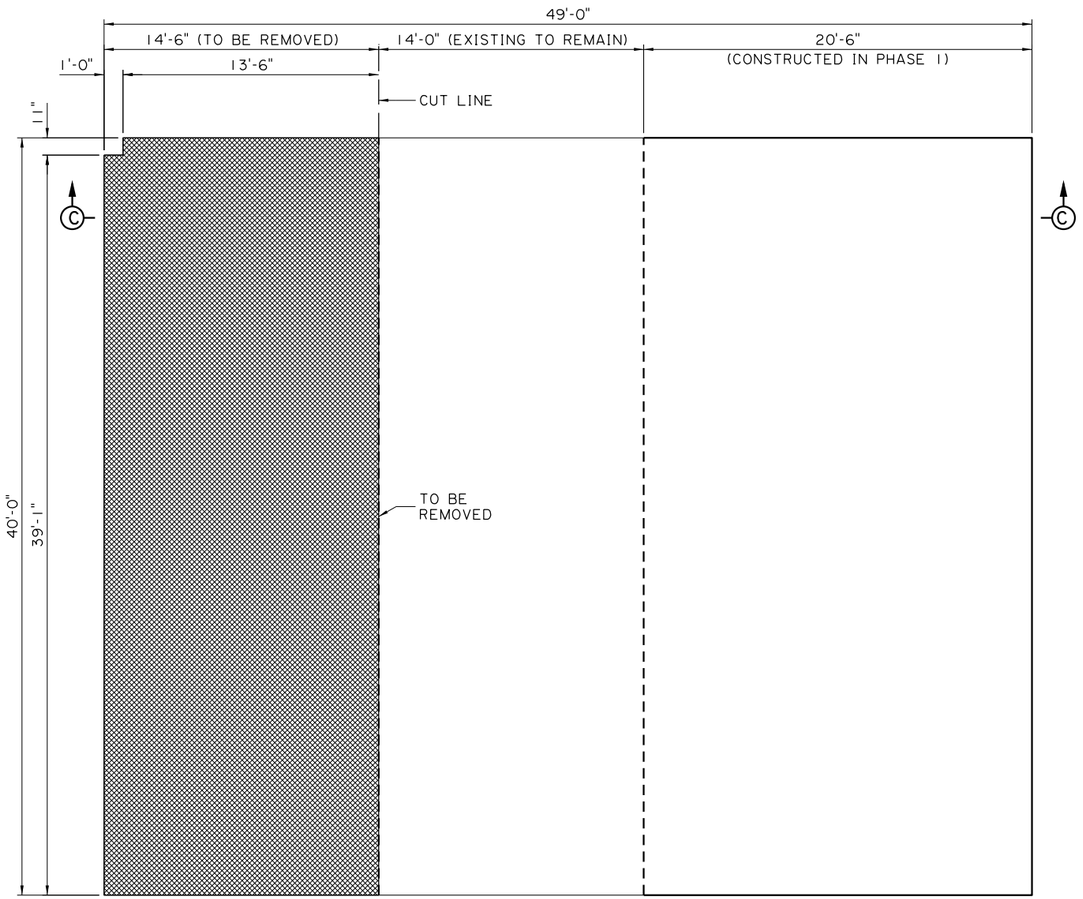

PLAN - PHASE 2 REMOVAL
(WEST END APPROACH)
SCALE: 1/4" = 1'-0"

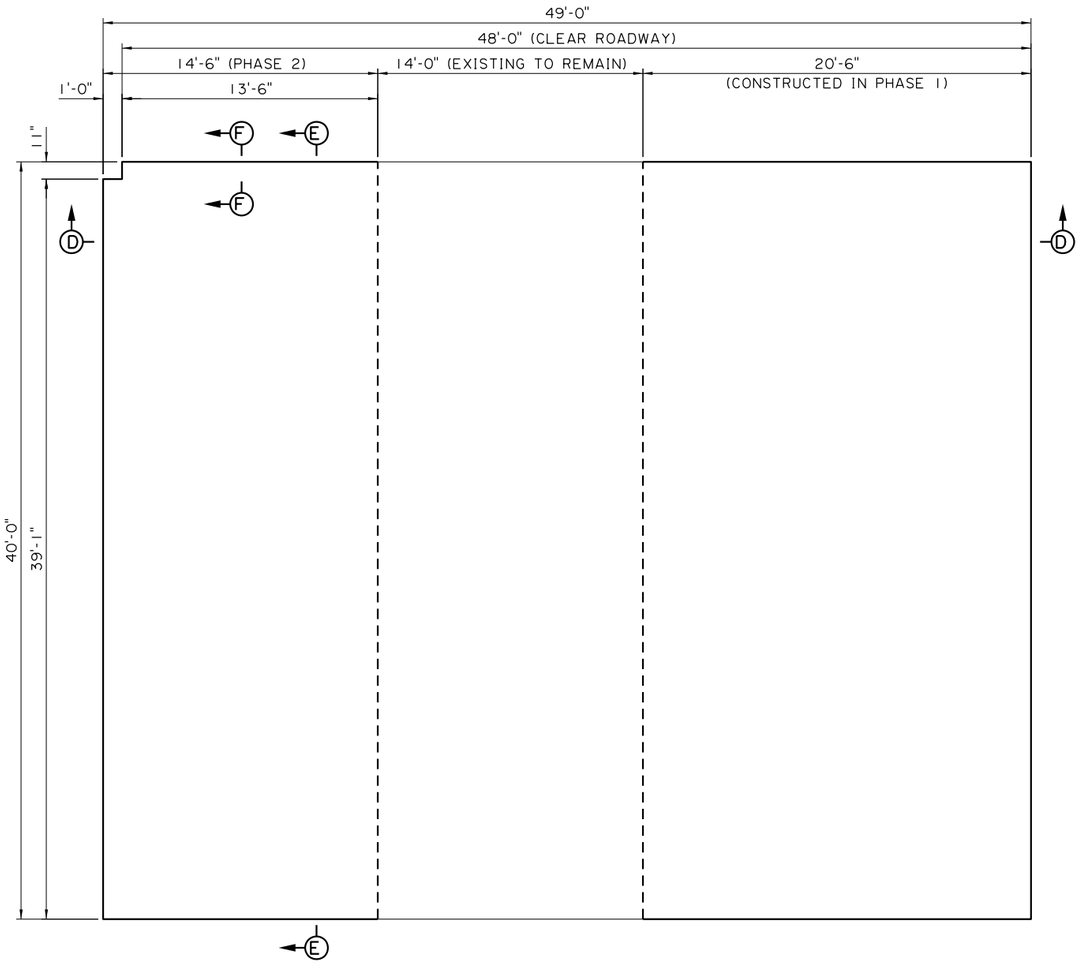

PLAN - PHASE 2 CONSTRUCTION
(WEST END APPROACH)
SCALE: 1/4" = 1'-0"

TECHNICAL PROPOSAL PLANS

S:\xdrive\HUVAL Projects\7262 (I-10 Calcasieu P3)\05 Drawings\Bridge\02 Border to Print\03-Bilbo\Technical Proposal\14-22_Approach Slab Details_Bilbo.dgn 3/9/2023 10:00:48 AM

SHEET NUMBER	253
PARISH	CALCASIEU
CONTROL SECTION	450-91
STATE PROJECT	H.003931
DESIGN	M. HEBERT
CHECK	K. WERTHER
DETAIL	K. CART
CHECK	M. HEBERT
REVIEW	
SERIES	2 OF 9

TECHNICAL PROPOSAL PLANS
PRELIMINARY
NOT FOR CONSTRUCTION
ENGINEER:
KATHERINE V. WERTHER
LICENSE #:
46868
DATE:
3/9/2023

NO.	DATE	REVISION OR CHANGE ORDER DESCRIPTION	BY

B-15 (BILBO STREET)
APPROACH SLAB DETAILS

I-10 CALCASIEU RIVER BRIDGE IMPROVEMENTS

LOUISIANA DEPARTMENT OF TRANSPORTATION & DEVELOPMENT

CALCASIEU BRIDGE PARTNERS

TECHNICAL PROPOSAL PLANS
S:\xdrive\HUVAL Projects\7262 (I-10 Calcasieu P3)\05 Drawings\Bridge\02 Border to Print\03-Bilbo\Technical Proposal\14-22_Approach Slab Details_Bilbo.dgn
3/9/2023 10:01:04 AM

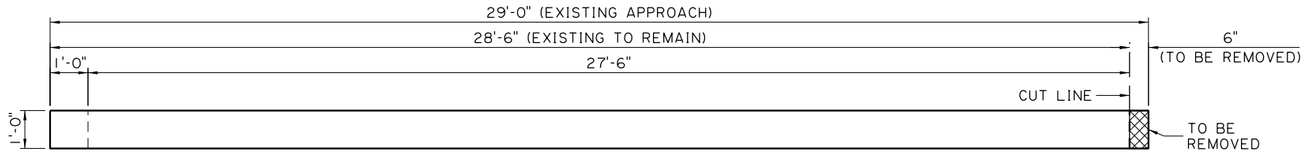

SECTION A-A
SCALE: ½" = 1'-0"

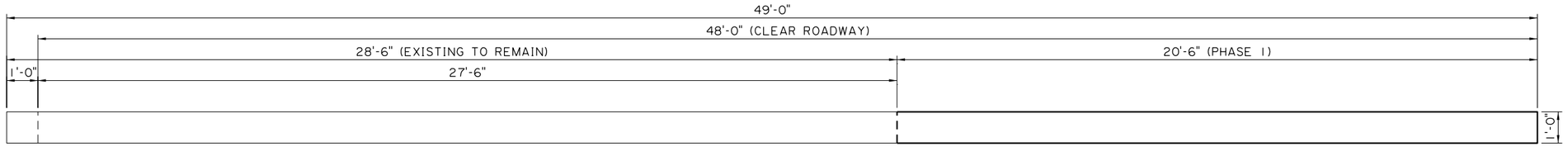

SECTION B-B
SCALE: ½" = 1'-0"

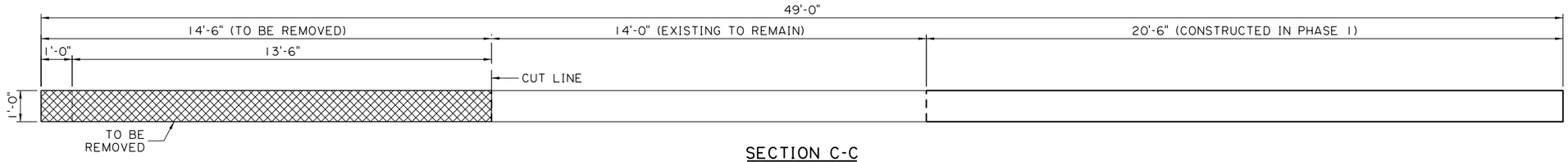

SECTION C-C
SCALE: ½" = 1'-0"

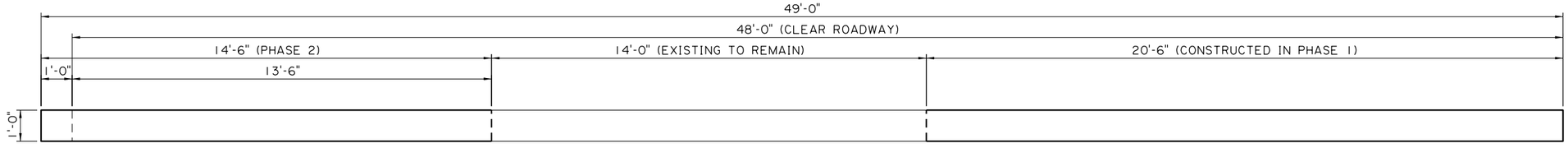

SECTION D-D
SCALE: ½" = 1'-0"

SHEET NUMBER 254

PARISH	CONTROL SECTION	STATE PROJECT
CALCASIEU	450-91	H.003931

DESIGN	CHECK	DETAIL	CHECK	REVIEW	SERIES
M. HEBERT	K. WERTHER	K. CART	M. HEBERT		3 OF 9

TECHNICAL PROPOSAL PLANS
PRELIMINARY
NOT FOR CONSTRUCTION
ENGINEER:
KATHERINE V. WERTHER
LICENSE #:
46868
DATE:
3/9/2023

NO.	DATE	REVISION OR CHANGE ORDER DESCRIPTION	BY

B-15 (BILBO STREET)
APPROACH SLAB DETAILS
I-10 CALCASIEU RIVER BRIDGE IMPROVEMENTS

DOTD LOUISIANA DEPARTMENT OF TRANSPORTATION & DEVELOPMENT
CBP CALCASIEU BRIDGE PARTNERS

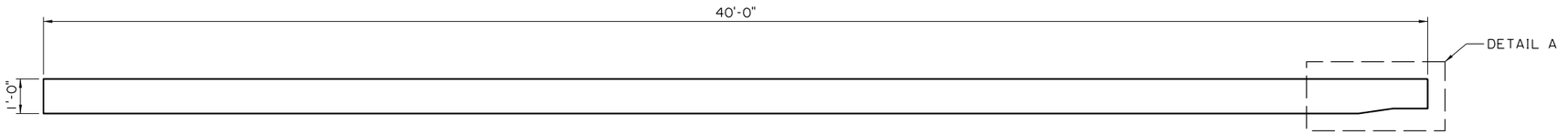

SECTION E-E
SCALE: 1/2" = 1'-0"

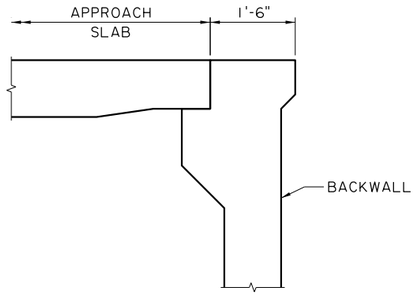

SECTION F-F
SCALE: 3/4" = 1'-0"

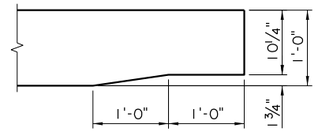

DETAIL A
SCALE: 1" = 1'-0"

TECHNICAL PROPOSAL PLANS

S:\xdrive\HUVAL Projects\7262 (I-10 Calcasieu P3)\05 Drawings\Bridge\02 Border to Print\03-Bilbo\Technical Proposal\14-22_Approach Slab Details_Bilbo.dgn 3/9/2023 10:01:20 AM

SHEET NUMBER	255
PARISH	CALCASIEU
CONTROL SECTION	450-91
STATE PROJECT	H.003931
DESIGN	M. HEBERT
CHECK	K. WERTHER
DETAIL	K. CART
CHECK	M. HEBERT
REVIEW	
SERIES	4 OF 9

TECHNICAL PROPOSAL PLANS

PRELIMINARY
NOT FOR CONSTRUCTION

ENGINEER:
KATHERINE V. WERTHER

LICENSE #:
46868

DATE:
3/9/2023

NO.	DATE	REVISION OR CHANGE ORDER DESCRIPTION	BY

B-15 (BILBO STREET)
APPROACH SLAB DETAILS

I-10 CALCASIEU RIVER BRIDGE IMPROVEMENTS

LOUISIANA DEPARTMENT OF TRANSPORTATION & DEVELOPMENT

CALCASIEU BRIDGE PARTNERS

TECHNICAL PROPOSAL PLANS

S:\xdrive\HUVAL Projects\7262 (I-10 Calcasieu P3)\05 Drawings\Bridge\02 Border to Print\03-Bilbo\Technical Proposal\14-22_Approach Slab Details_Bilbo.dgn 3/9/2023 10:01:38 AM

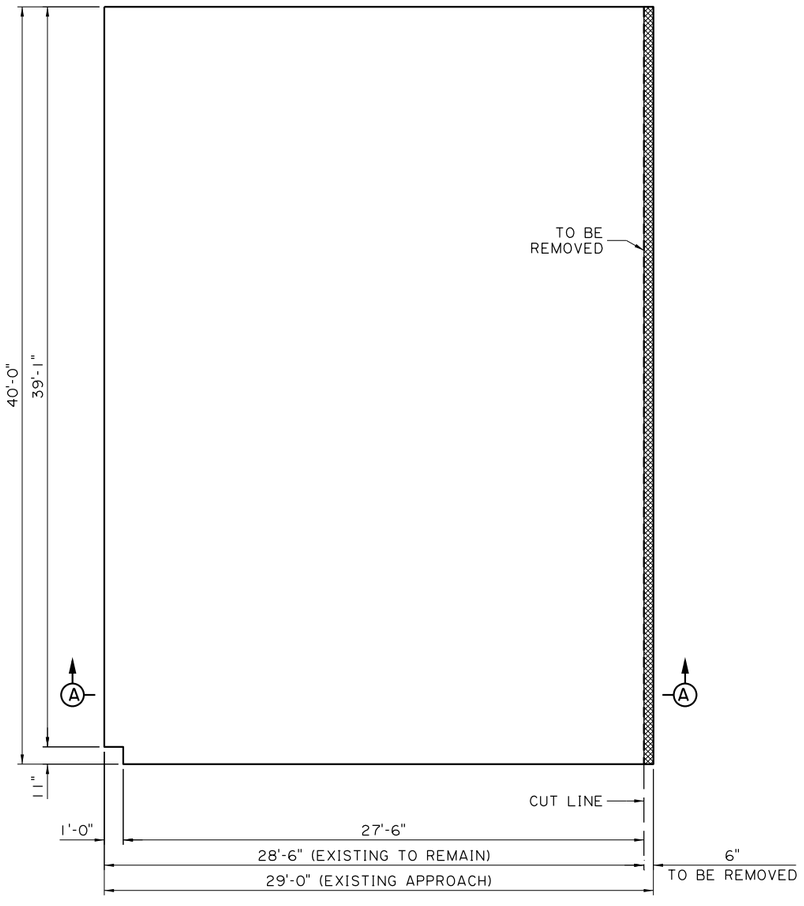

PLAN - PHASE I REMOVAL
(EAST END APPROACH)
SCALE: 1/4" = 1'-0"

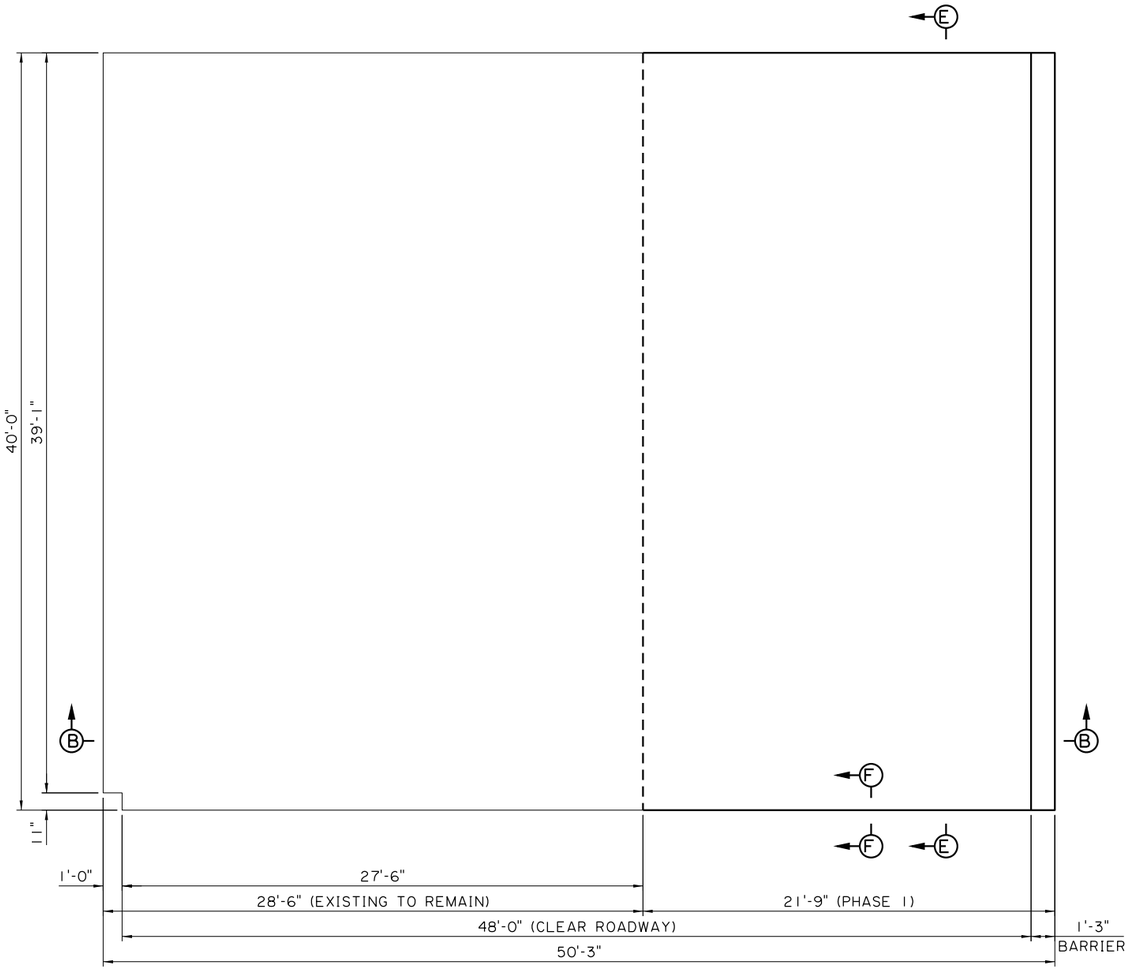

PLAN - PHASE I CONSTRUCTION
(EAST END APPROACH)
SCALE: 1/4" = 1'-0"

SHEET NUMBER	256
PARISH	CALCASIEU
CONTROL SECTION	450-91
STATE PROJECT	H.003931
DESIGN	M. HEBERT
CHECK	K. WERTHER
DETAIL	K. CART
CHECK	M. HEBERT
REVIEW	
SERIES	5 OF 9

TECHNICAL PROPOSAL PLANS
PRELIMINARY
NOT FOR CONSTRUCTION
ENGINEER:
KATHERINE V. WERTHER
LICENSE #:
46868
DATE:
3/9/2023

NO.	DATE	REVISION OR CHANGE ORDER DESCRIPTION	BY

B-15 (BILBO STREET)
APPROACH SLAB DETAILS

I-10 CALCASIEU RIVER BRIDGE IMPROVEMENTS

DOTD LOUISIANA DEPARTMENT OF TRANSPORTATION & DEVELOPMENT

CBP CALCASIEU BRIDGE PARTNERS

TECHNICAL PROPOSAL PLANS
S:\xdrive\HUVAL Projects\7262 (I-10 Calcasieu P3)\05 Drawings\Bridge\02 Border to Print\03-Bilbo\Technical Proposal\14-22_Approach Slab Details_Bilbo.dgn 3/9/2023 10:01:54 AM

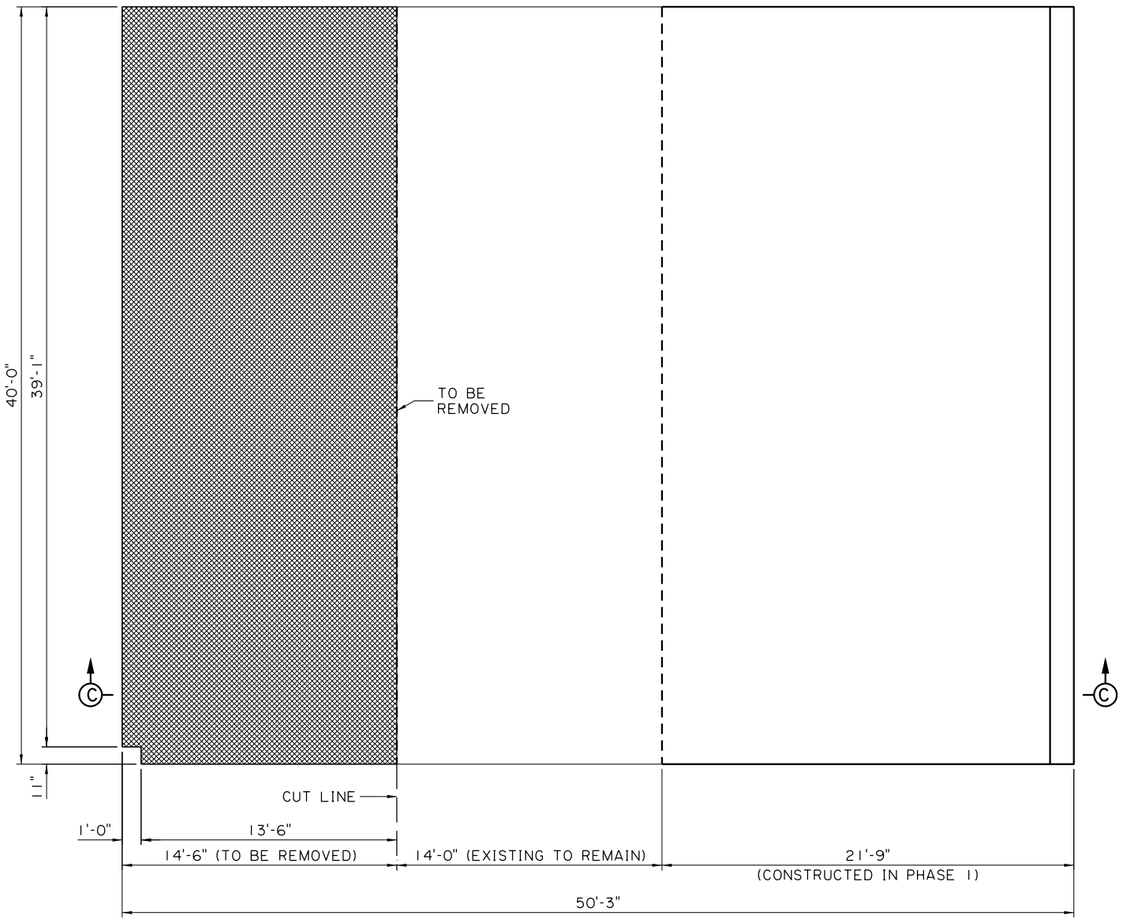

PLAN - PHASE 2 REMOVAL
(EAST END APPROACH)
SCALE: 1/4" = 1'-0"

SHEET NUMBER	257
PARISH	CALCASIEU
CONTROL SECTION	450-91
STATE PROJECT	H.003931
DESIGN	M. HEBERT
CHECK	K. WERTHER
DETAIL	K. CART
CHECK	M. HEBERT
REVIEW	
SERIES	6 OF 9

TECHNICAL PROPOSAL PLANS
PRELIMINARY
NOT FOR CONSTRUCTION
ENGINEER:
KATHERINE V. WERTHER
LICENSE #:
46868
DATE:
3/9/2023

NO.	DATE	REVISION OR CHANGE ORDER DESCRIPTION	BY

B-15 (BILBO STREET)
APPROACH SLAB DETAILS

I-10 CALCASIEU RIVER BRIDGE IMPROVEMENTS

DOTD LOUISIANA DEPARTMENT OF TRANSPORTATION & DEVELOPMENT
CBP CALCASIEU BRIDGE PARTNERS

TECHNICAL PROPOSAL PLANS
S:\xdrive\HUVAL Projects\7262 (I-10 Calcasieu P3)\05 Drawings\Bridge\02 Border to Print\03-Bilbo\Technical Proposal\14-22_Approach Slab Details_Bilbo.dgn 3/9/2023 10:02:11 AM

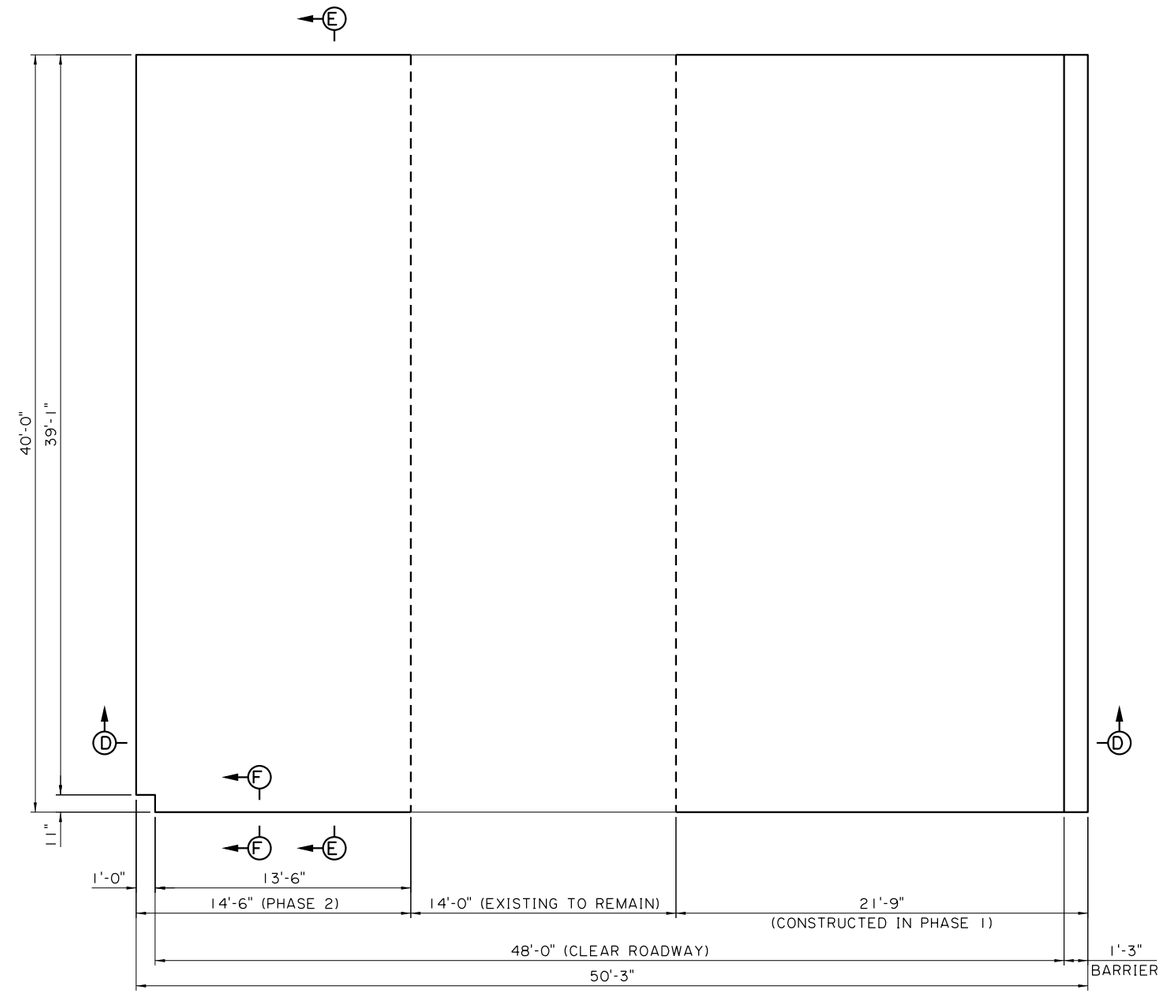

PLAN - PHASE 2 CONSTRUCTION
(EAST END APPROACH)
SCALE: 1/4" = 1'-0"

SHEET NUMBER	258

PARISH	CONTROL SECTION	STATE PROJECT
CALCASIEU	450-91	H.003931

DESIGN	M. HEBERT	DETAIL	K. CART	REVIEW	
CHECK	K. WERTHER	CHECK	M. HEBERT	SERIES	7 OF 9

TECHNICAL PROPOSAL PLANS
PRELIMINARY
NOT FOR CONSTRUCTION
ENGINEER:
KATHERINE V. WERTHER
LICENSE #:
46868
DATE:
3/9/2023

NO.	DATE	REVISION OR CHANGE ORDER DESCRIPTION	BY

B-15 (BILBO STREET)
APPROACH SLAB DETAILS
I-10 CALCASIEU RIVER BRIDGE IMPROVEMENTS

DOTD LOUISIANA DEPARTMENT OF TRANSPORTATION & DEVELOPMENT
CBP CALCASIEU BRIDGE PARTNERS

TECHNICAL PROPOSAL PLANS
S:\xdrive\HUVAL Projects\7262 (I-10 Calcasieu P3)\05 Drawings\Bridge\02 Border to Print\03-Bilbo\Technical Proposal\14-22_Approach Slab Details_Bilbo.dgn 3/9/2023 10:02:28 AM

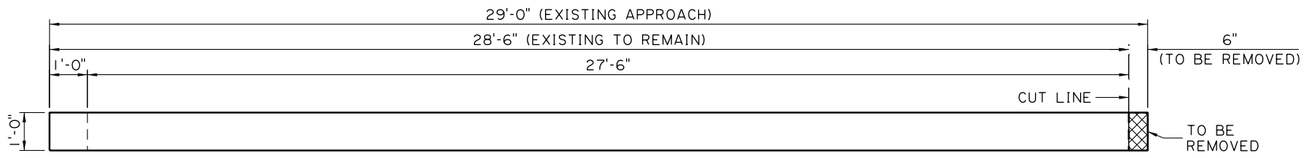

SECTION A-A
SCALE: ½" = 1'-0"

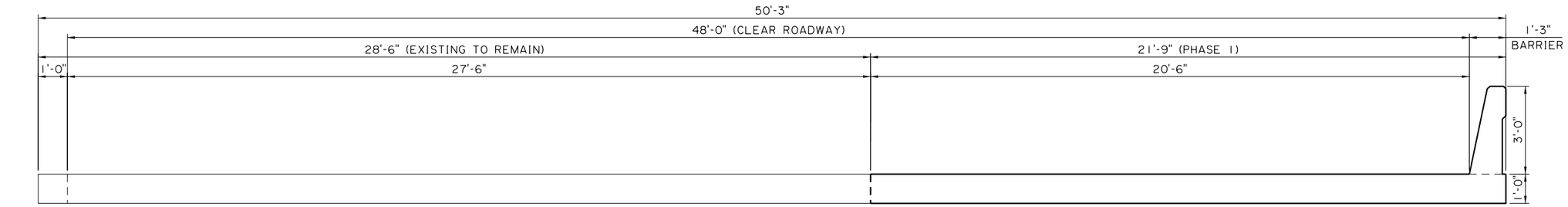

SECTION B-B
SCALE: ½" = 1'-0"

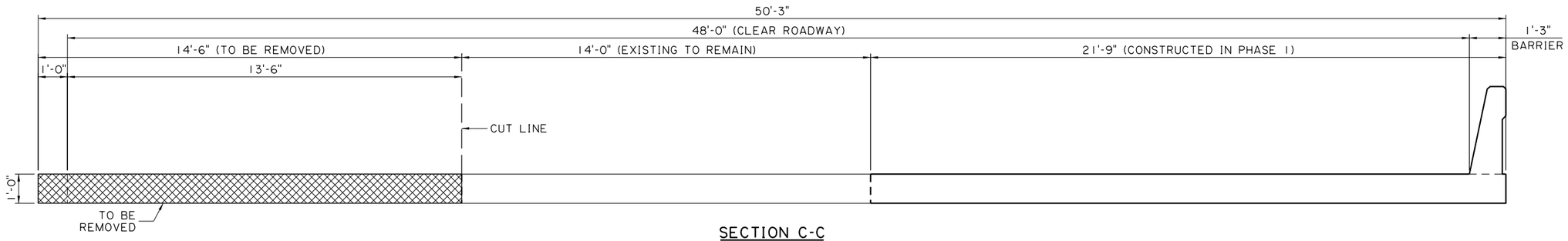

SECTION C-C
SCALE: ½" = 1'-0"

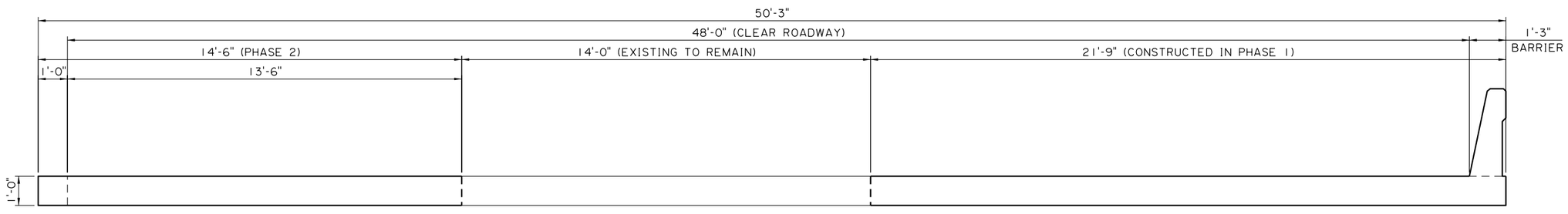

SECTION D-D
SCALE: ½" = 1'-0"

SHEET NUMBER	259
PARISH	CALCASIEU
CONTROL SECTION	450-91
STATE PROJECT	H.003931
DESIGN	M. HEBERT
CHECK	K. WERTHER
DETAIL	K. CART
CHECK	M. HEBERT
REVIEW	
SERIES	8 OF 9

TECHNICAL PROPOSAL PLANS
PRELIMINARY
NOT FOR CONSTRUCTION
ENGINEER:
KATHERINE V. WERTHER
LICENSE #:
46868
DATE:
3/9/2023

NO.	DATE	REVISION OR CHANGE ORDER DESCRIPTION	BY

B-15 (BILBO STREET)
APPROACH SLAB DETAILS
I-10 CALCASIEU RIVER BRIDGE IMPROVEMENTS

LOUISIANA DEPARTMENT OF TRANSPORTATION & DEVELOPMENT
CALCASIEU BRIDGE PARTNERS

TECHNICAL PROPOSAL PLANS
S:\xdrive\HUVAL Projects\7262 (I-10 Calcasieu P3)\05 Drawings\Bridge\02 Border to Print\03-Bilbo\Technical Proposal\14-22_Approach Slab Details_Bilbo.dgn
3/9/2023 10:02:44 AM

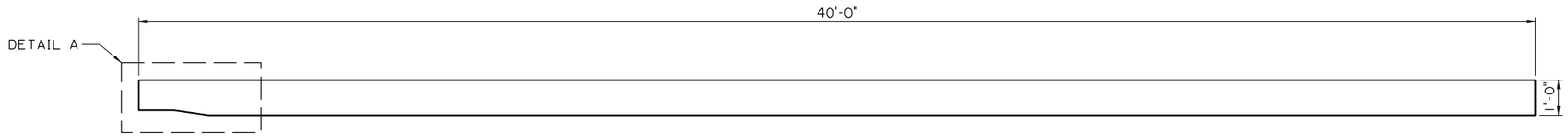

SECTION E-E
SCALE: 1/2" = 1'-0"

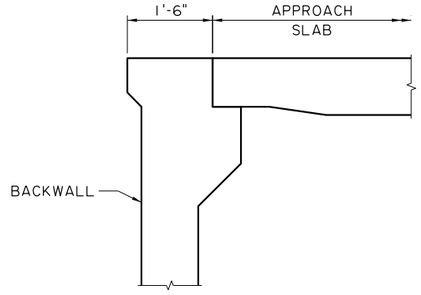

SECTION F-F
SCALE: 3/4" = 1'-0"

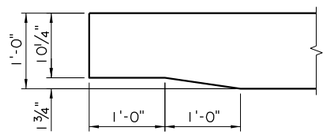

DETAIL A
SCALE: 1" = 1'-0"

SHEET NUMBER	260

PARISH	CONTROL SECTION	STATE PROJECT
CALCASIEU	450-91	H.003931

DESIGN	CHECK	DETAIL	CHECK	REVIEW	SERIES
M. HEBERT	K. WERTHER	K. CART	M. HEBERT		9 OF 9

TECHNICAL PROPOSAL PLANS
PRELIMINARY
NOT FOR CONSTRUCTION
ENGINEER:
KATHERINE V. WERTHER
LICENSE #:
46868
DATE:
3/9/2023

NO.	DATE	REVISION OR CHANGE ORDER DESCRIPTION	BY

B-15 (BILBO STREET)
APPROACH SLAB DETAILS

I-10 CALCASIEU RIVER BRIDGE IMPROVEMENTS

DOTD LOUISIANA DEPARTMENT OF TRANSPORTATION & DEVELOPMENT

CBP CALCASIEU BRIDGE PARTNERS

TECHNICAL PROPOSAL PLANS
5/25/2023 13:45:23
Z:\Shared\1370 - I-10 Calcasieu P3\DWGS\ROAD\001-"title\001_Title Sheet_MOT.dgn

INDEX TO SHEETS

SHEET NO.	DESCRIPTION
001	TITLE SHEET AND LAYOUT MAP
002 - 036	TYPICAL SECTIONS
037 - 043	MAINTENANCE OF TRAFFIC PHASE 1
044 - 050	MAINTENANCE OF TRAFFIC PHASE 2
051 - 057	MAINTENANCE OF TRAFFIC PHASE 3
058 - 064	MAINTENANCE OF TRAFFIC PHASE 4
065 - 071	MAINTENANCE OF TRAFFIC PHASE 5
072 - 078	MAINTENANCE OF TRAFFIC PHASE 6
079 - 085	MAINTENANCE OF TRAFFIC PHASE 7
086 - 092	MAINTENANCE OF TRAFFIC PHASE 8
093 - 099	MAINTENANCE OF TRAFFIC PHASE 9
100 - 108	DETOUR ROUTES

TOTAL SHEETS IN VOLUME 3 = 108

STATE OF LOUISIANA
DEPARTMENT OF TRANSPORTATION AND DEVELOPMENT

PLANS OF PROPOSED STATE HIGHWAY

FEDERAL PROJECT NUMBER H003931
STATE PROJECT NUMBER H.003931

I-10 CALCASIEU RIVER BRIDGE PUBLIC-PRIVATE PARTNERSHIP PROJECT

CALCASIEU PARISH
INTERSTATE 10

VOLUME 3 - Maintenance of Traffic

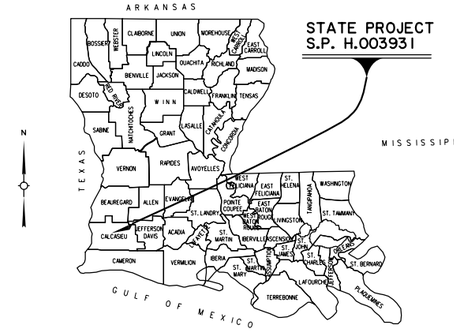

VICINITY MAP

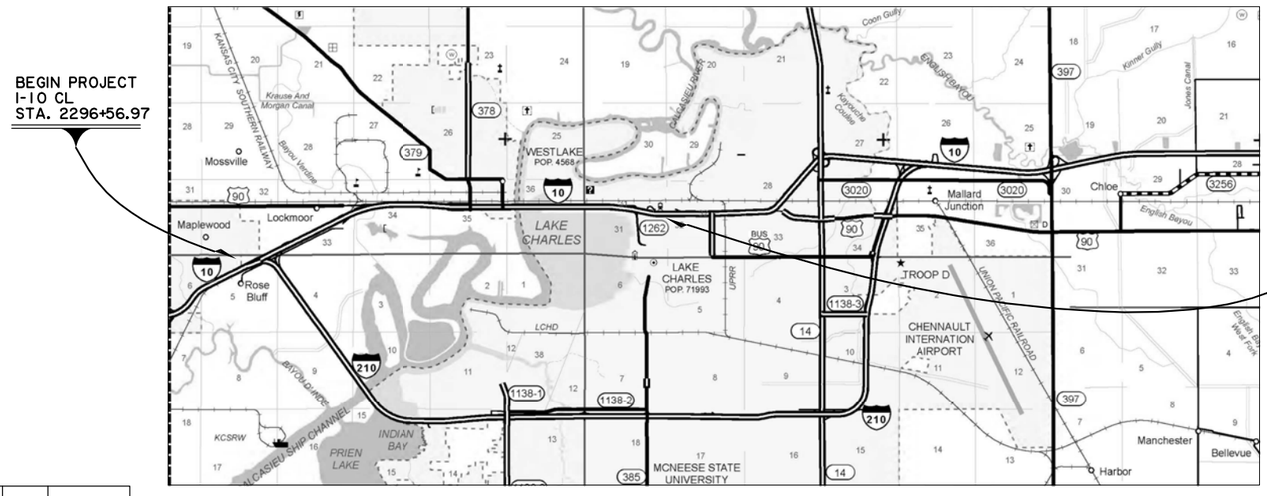

APPROVED

DOTD CHIEF ENGINEER

DATE

DATE	REVISION	DATE	RECOMMENDED	DATE	APPROVED

SCHEDULE OF REVISIONS

LAYOUT MAP

SCALE: 1/2 INCH = 1 MILE

1 0 1 2 3

TYPE OF CONSTRUCTION

REMOVING ASPHALT PAVEMENT, DRAINAGE STRUCTURES, GRADING, BRIDGES, MSE WALLS, BASE COURSE, ASPHALT CONCRETE, CONCRETE CURB, TRAFFIC SIGNALIZATION, PERMANENT SIGNING, PERMANENT STRIPING.

SURVEY

HORIZONTAL CONTROL:
LOUISIANA STATE PLANE COORDINATES
ZONE 1702

BASE STATIONS:
PID: DP7417, CORS ID: CALC
DESIGNATION: CALCASIEU PASS CORS ARP
LAT. = N29°46'05.28112" LON. = W093°20'34.37139"
NORTHING/Y = 466763.16 EASTING/X = 2643301.38

PID: DK3579, CORS ID: CAMR
DESIGNATION: CAMERON PARISH CT CORS ARP
LAT. = N29°47'54.57704" LON. = W093°19'30.38074"
NORTHING/Y = 477703.50 EASTING/X = 2649131.90

VERTICAL CONTROL: NAVD 88 (GEOID 18) US SFT

ALL BEARINGS AND DISTANCES ARE GRID

STANDARD SPECIFICATIONS

THE 2016 EDITION OF THE LOUISIANA DOTD STANDARD SPECIFICATIONS FOR ROADS AND BRIDGES,AS AMENDED BY THE PROJECT SPECIFICATIONS, SHALL GOVERN.

SCALES

PLAN: 1" = 50'
PROFILE HORIZ: 1" = 50'
PROFILE VERT: 1" = 5'

LENGTH AND LOCATION OF WORK

CONTROL SECTION	STATION		LOGMILE		ALGEBRAIC SUM OF ALL EQUATIONS	GROSS LENGTH	EXCEPTION	BRIDGE LENGTH		ROADWAY LENGTH	
	BEGIN	END	BEGIN	END	FEET	FEET	FEET	FEET	MILES	FEET	MILES
TOTAL LENGTH OF BRIDGES											
TOTAL LENGTH OF ROADWAY											
TOTAL MILES											

SHEET NUMBER	1
PARISH	CALCASIEU
CONTROL SECTION	450-91
STATE PROJECT	H.003931
DESIGN	G. McCALL
CHECK	M. HELMINGER
DETAIL	M. HELMINGER
CHECK	G. McCALL
REVIEW	
SERIES #	

TECHNICAL PROPOSAL PLANS
PRELIMINARY
NOT FOR CONSTRUCTION
ENGINEER:
GLENN McCALL
LICENSE #:
29639
DATE:
5/25/2023

NO.	REVISION OR CHANGE ORDER DESCRIPTION	DATE	BY

TITLE SHEET

I-10 CALCASIEU RIVER BRIDGE P3

DOTD LOUISIANA DEPARTMENT OF TRANSPORTATION & DEVELOPMENT

CBP CALCASIEU BRIDGE PARTNERS

TECHNICAL PROPOSAL PLANS
S:\xdrive\HUVAL Projects\7262 (I-10 Calcasieu P3)\05 Drawings\Roadway\Border to Print\X1_MOT_Sections_Station 2314+25.dgn
05/10/2023 08:21:15 AM

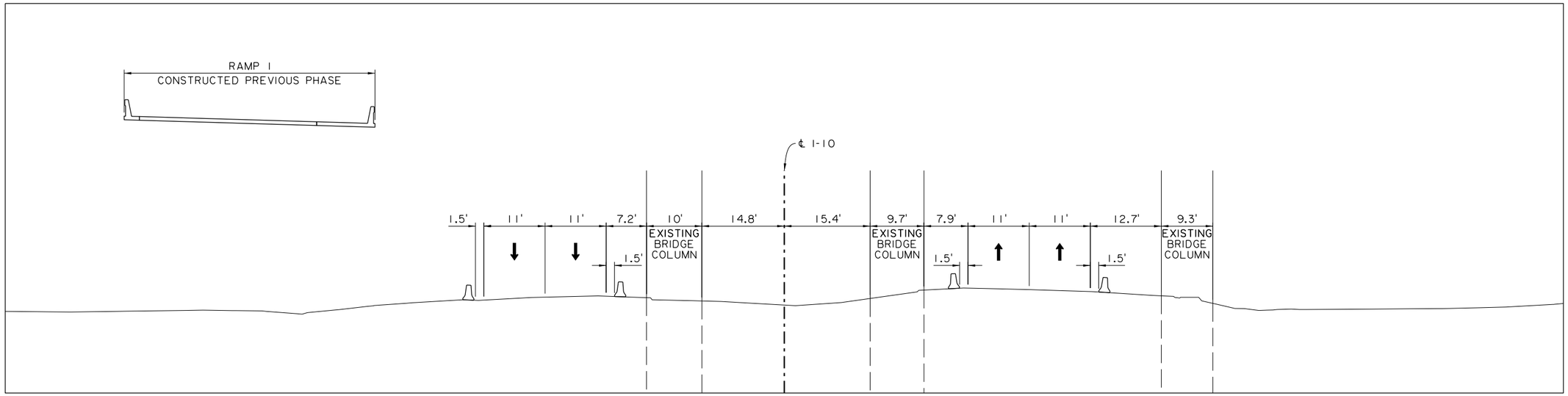

2314+25.00
STAGE 2

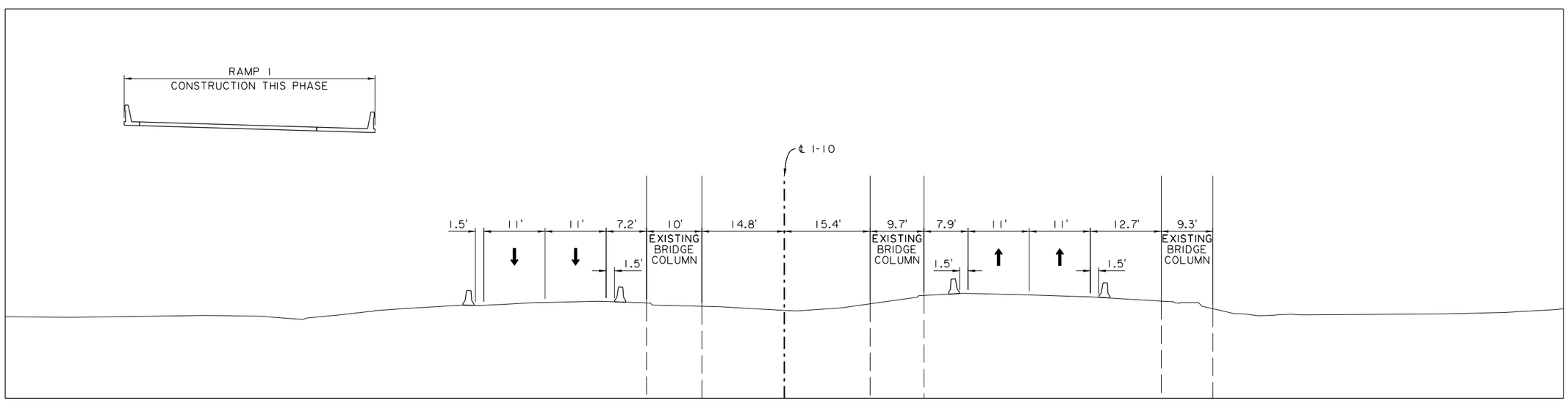

2314+25.00
STAGE 1

SHEET NUMBER	2
PARISH	CALCASIEU
CONTROL SECTION	450-91
STATE PROJECT	H.003931
DESIGN	M. HELMINGER
CHECK	N. HELMINGER
DETAIL	T. DUPUY
CHECK	M. HELMINGER
REVIEW	T. GATTLE
SERIES	1 OF 5

TECHNICAL PROPOSAL PLANS
PRELIMINARY
NOT FOR CONSTRUCTION
ENGINEER:
GLENN McCALL
LICENSE #:
29639
DATE:
05/10/2023

NO.	DATE	REVISION OR CHANGE ORDER DESCRIPTION	BY

MAINTENANCE OF TRAFFIC TYPICAL SECTIONS STATION 2314+25

I-10 CALCASIEU RIVER BRIDGE P3

DOTD LOUISIANA DEPARTMENT OF TRANSPORTATION & DEVELOPMENT

CBP CALCASIEU BRIDGE PARTNERS

TECHNICAL PROPOSAL PLANS
S:\xdrive\HUVAL Projects\7262 (I-10 Calcasieu P3)\05 Drawings\Roadway\Border to Print\X1_MOT_Sections_Station 2314+25.dgn
05/10/2023 08:21:15 AM

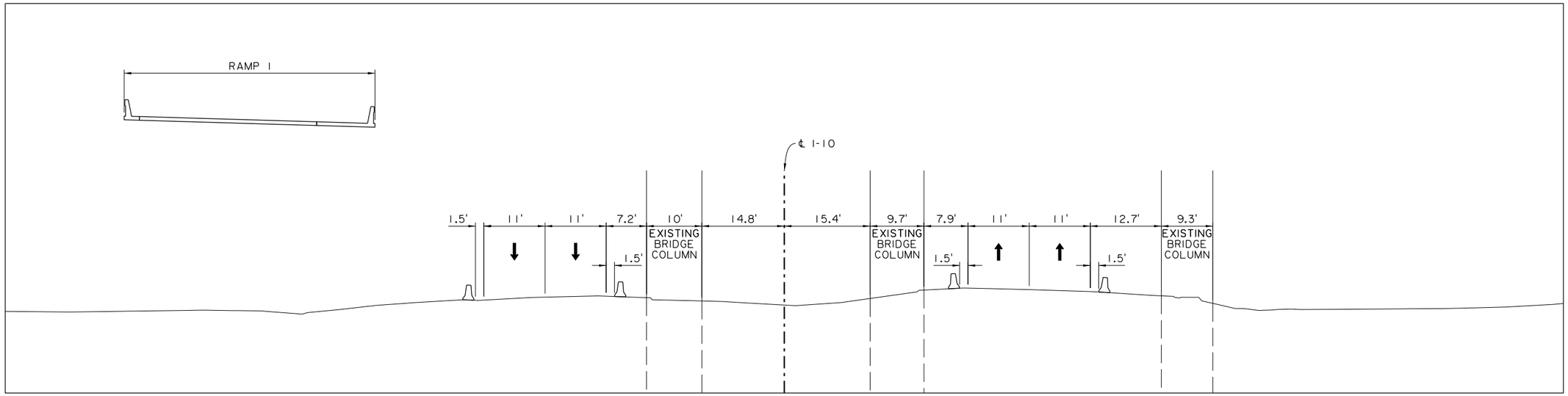

2314+25.00
STAGE 4

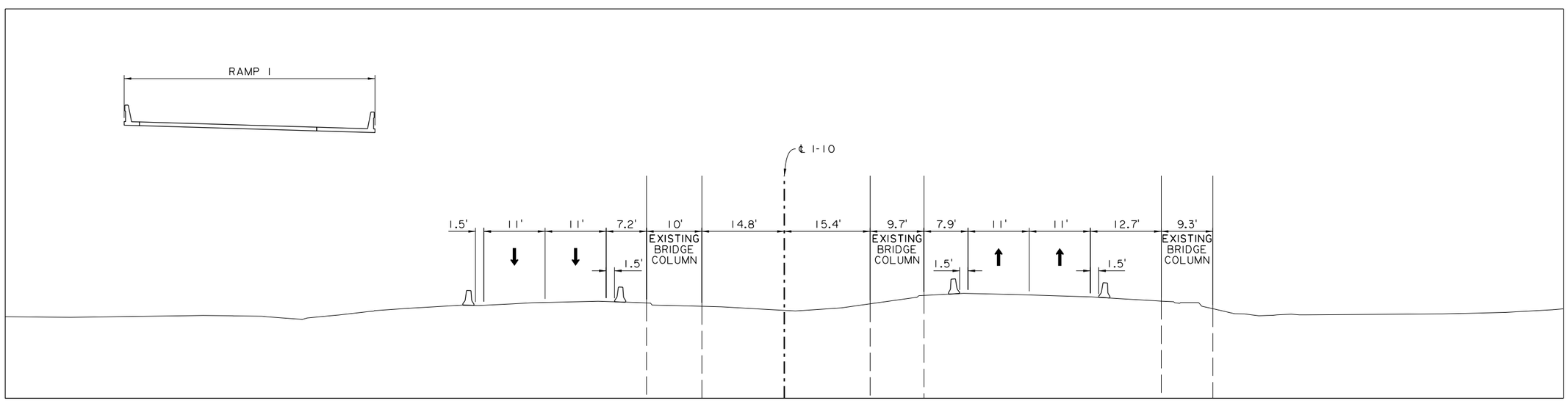

2314+25.00
STAGE 3

SHEET NUMBER	3
PARISH	CALCASIEU
CONTROL SECTION	450-91
STATE PROJECT	H.003931
DESIGN	M. HELMINGER
CHECK	N. HELMINGER
DETAIL	T. DUPUY
CHECK	M. HELMINGER
REVIEW	T. GATTLE
SERIES	2 OF 5

TECHNICAL PROPOSAL PLANS
PRELIMINARY
NOT FOR CONSTRUCTION
ENGINEER: GLENN McCALL
LICENSE #: 29639
DATE: 05/10/2023

NO.	DATE	REVISION OR CHANGE ORDER DESCRIPTION	BY

MAINTENANCE OF TRAFFIC TYPICAL SECTIONS STATION 2314+25

I-10 CALCASIEU RIVER BRIDGE P3

DOTD LOUISIANA DEPARTMENT OF TRANSPORTATION & DEVELOPMENT

CBP CALCASIEU BRIDGE PARTNERS

TECHNICAL PROPOSAL PLANS
S:\xdrive\HUVAL Projects\7262 (I-10 Calcasieu P3)\05 Drawings\Roadway\Border to Print\X1_MOT_Sections_Station 2314+25.dgn
05/10/2023 08:21:16 AM

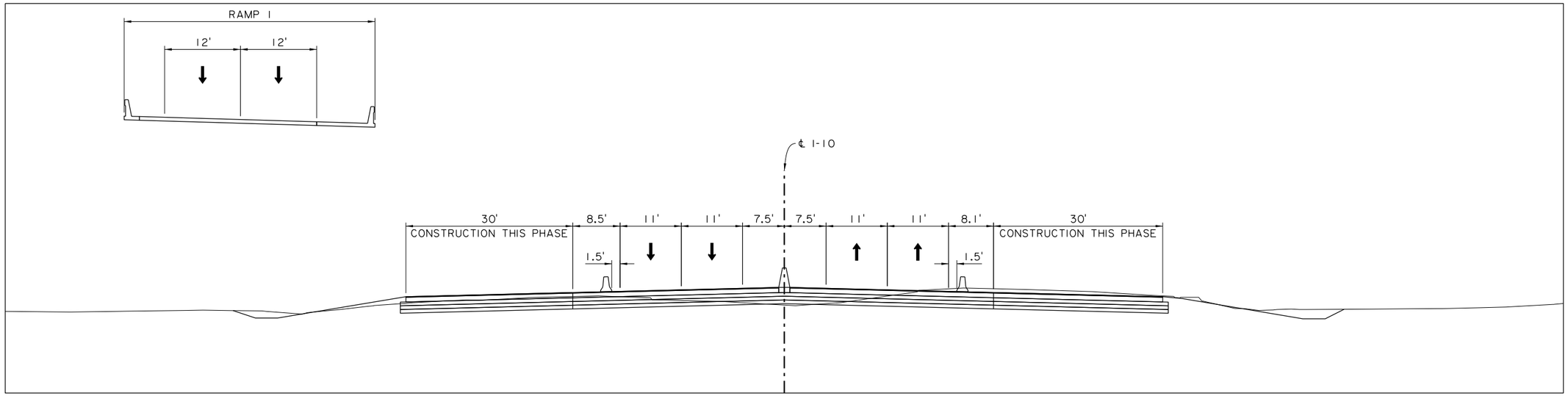

2314+25.00
STAGE 6

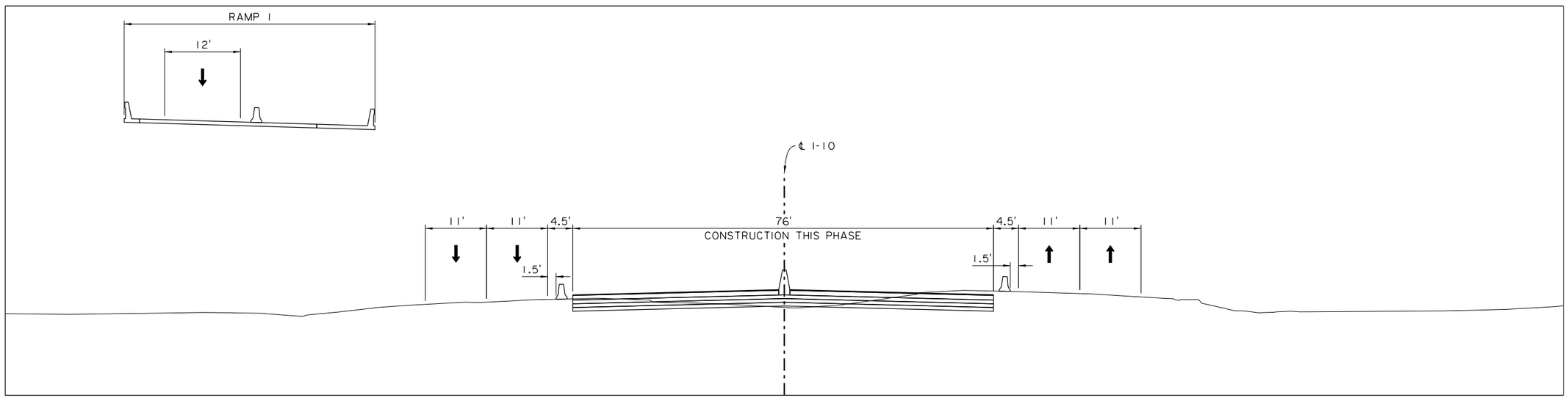

2314+25.00
STAGE 5

SHEET NUMBER	4
PARISH	CALCASIEU
CONTROL SECTION	450-91
STATE PROJECT	H.003931
DESIGN	M. HELMINGER
CHECK	N. HELMINGER
DETAIL	T. DUPUY
CHECK	M. HELMINGER
REVIEW	T. GATTLE
SERIES	3 OF 5

TECHNICAL PROPOSAL PLANS

PRELIMINARY
NOT FOR CONSTRUCTION

ENGINEER:
GLENN McCALL

LICENSE #:
29639

DATE:
05/10/2023

NO.	DATE	REVISION OR CHANGE ORDER DESCRIPTION	BY

MAINTENANCE OF TRAFFIC TYPICAL SECTIONS STATION 2314+25

I-10 CALCASIEU RIVER BRIDGE P3

DOTD LOUISIANA DEPARTMENT OF TRANSPORTATION & DEVELOPMENT

CBP CALCASIEU BRIDGE PARTNERS

TECHNICAL PROPOSAL PLANS
S:\xdrive\HUVAL Projects\7262 (I-10 Calcasieu P3)\05 Drawings\Roadway\Border to Print\X1_MOT_Sections_Station 2314+25.dgn
05/10/2023 08:21:16 AM

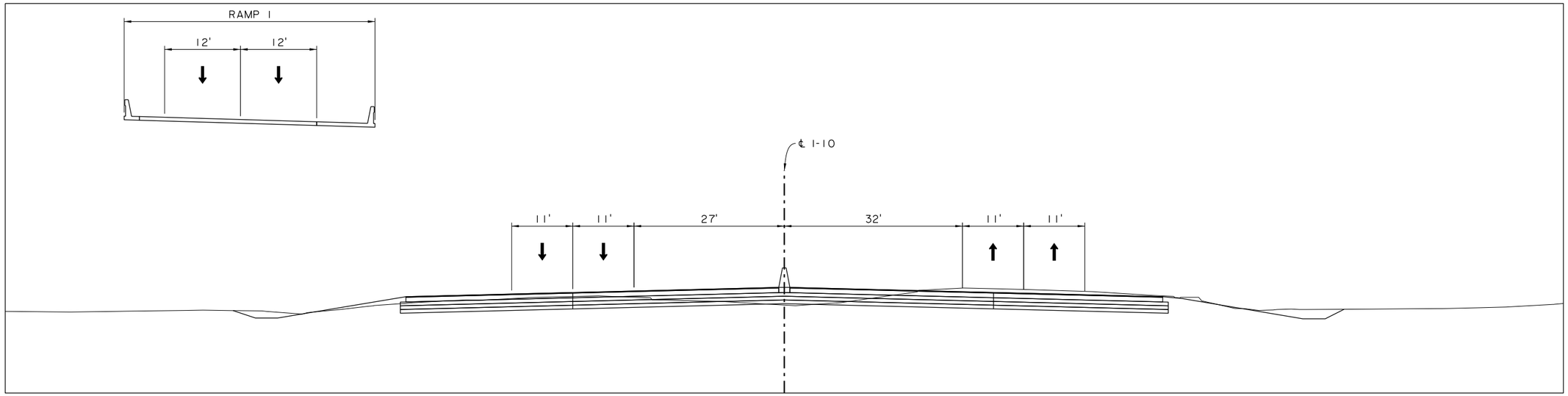

2314+25.00
STAGE 8

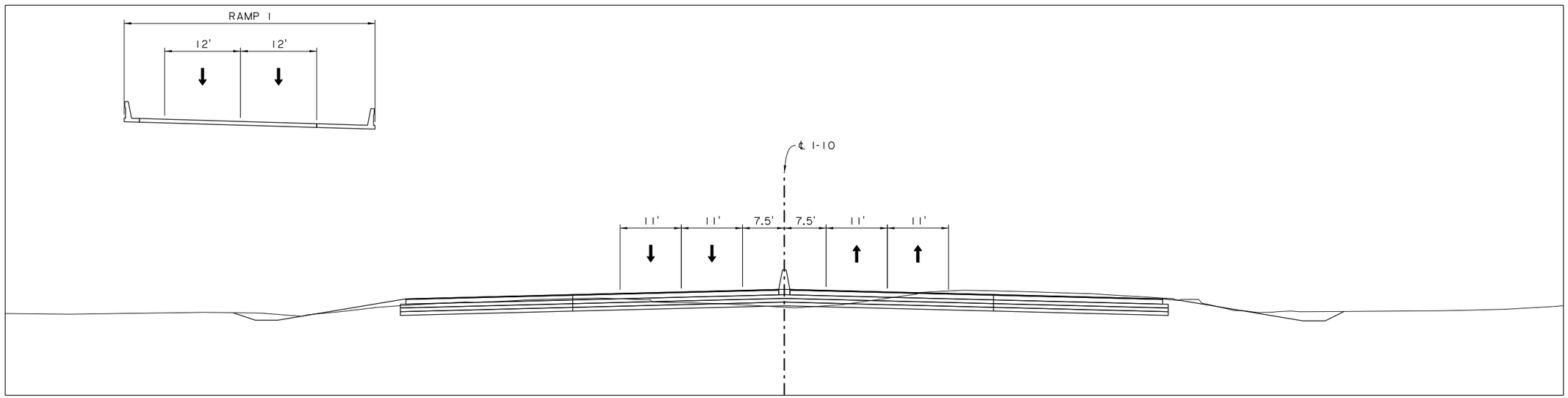

2314+25.00
STAGE 7

SHEET NUMBER	5

PARISH	CONTROL SECTION	STATE PROJECT
CALCASIEU	450-91	H.003931

DESIGN	M. HELMINGER
CHECK	N. HELMINGER
DETAIL	T. DUPUY
CHECK	M. HELMINGER
REVIEW	T. GATTLE
SERIES = 4 OF 5	

TECHNICAL PROPOSAL PLANS

PRELIMINARY
NOT FOR CONSTRUCTION

ENGINEER:
GLENN McCALL

LICENSE #:
29639

DATE:
05/10/2023

NO.	DATE	REVISION OR CHANGE ORDER DESCRIPTION	BY

MAINTENANCE OF TRAFFIC
TYPICAL SECTIONS
STATION 2314+25

I-10 CALCASIEU RIVER BRIDGE P3

DOTD LOUISIANA DEPARTMENT OF TRANSPORTATION & DEVELOPMENT

CBP CALCASIEU BRIDGE PARTNERS

TECHNICAL PROPOSAL PLANS

S:\xdrive\HUVAL Projects\7262 (I-10 Calcasieu P3)\05 Drawings\Roadway\Border to Print\X1_MOT_Sections_Station 2314+25.dgn 05/10/2023 08:21:16 AM

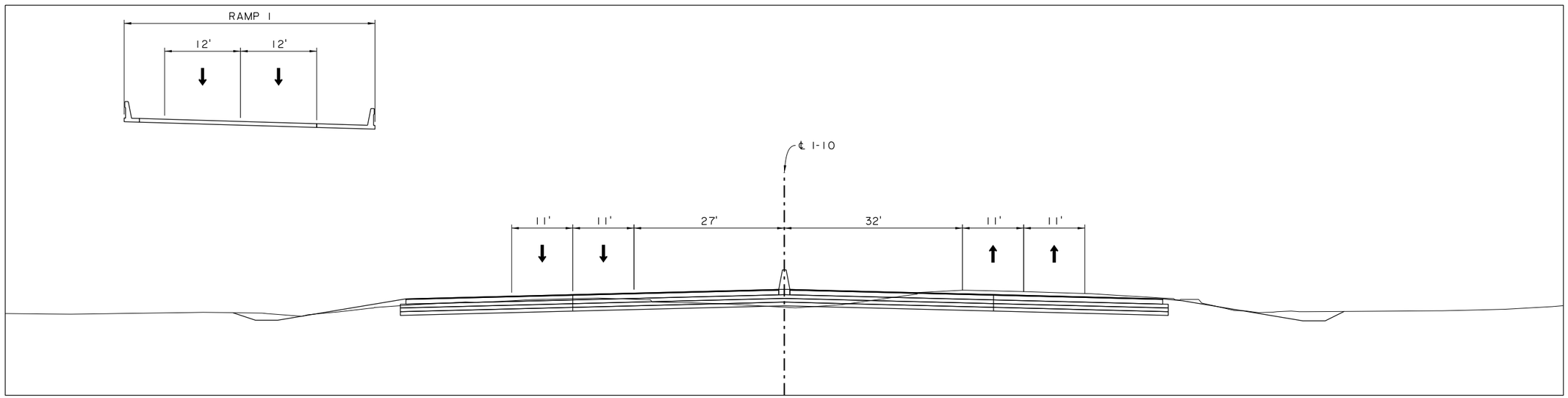

2314+25.00
STAGE 9

SHEET NUMBER	6

PARISH	CONTROL SECTION	STATE PROJECT
CALCASIEU	450-91	H.003931

DESIGN	M. HELMINGER	DETAIL	T. DUPUY	REVIEW	T. GATTLE
CHECK	N. HELMINGER	CHECK	M. HELMINGER	SERIES =	5 OF 5

TECHNICAL PROPOSAL PLANS

PRELIMINARY
NOT FOR CONSTRUCTION

ENGINEER:
GLENN McCALL

LICENSE #:
29639

DATE:
05/10/2023

NO.	DATE	REVISION OR CHANGE ORDER DESCRIPTION	BY

MAINTENANCE OF TRAFFIC
TYPICAL SECTIONS
STATION 2314+25

I-10 CALCASIEU RIVER BRIDGE P3

DOTD LOUISIANA DEPARTMENT OF TRANSPORTATION & DEVELOPMENT

CBP CALCASIEU BRIDGE PARTNERS

TECHNICAL PROPOSAL PLANS
S:\xdrive\HUVAL Projects\7262 (I-10 Calcasieu P3)\05 Drawings\Roadway\Border to Print\X2_MOT_Sections_Station 2315+70.dgn
05/10/2023 08:21:17 AM

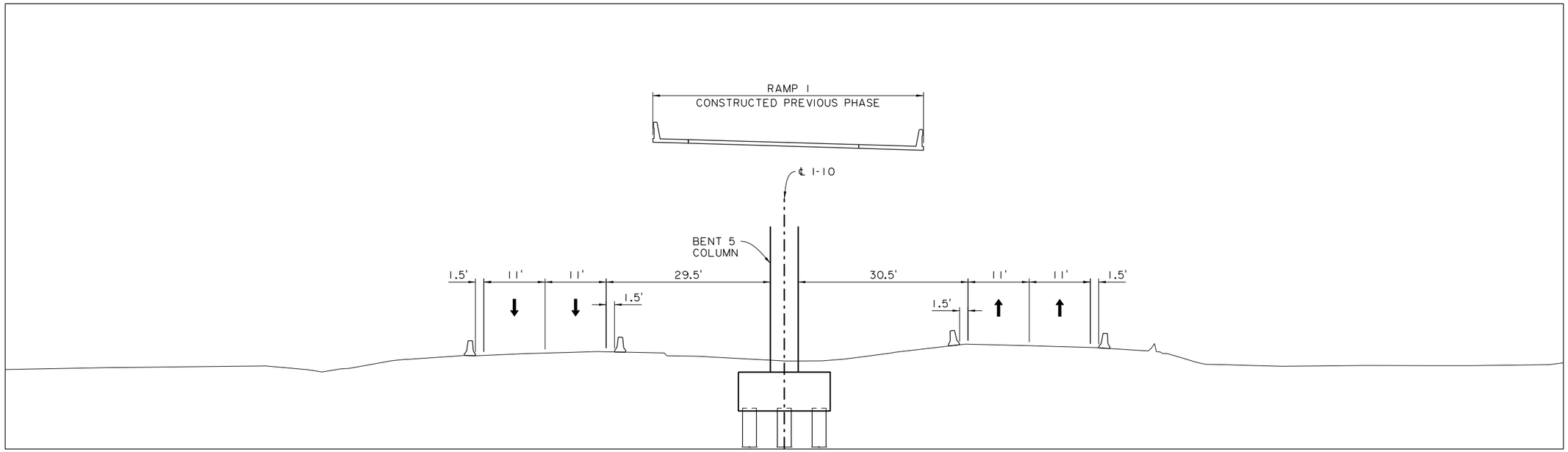

2315+70.00
STAGE 2

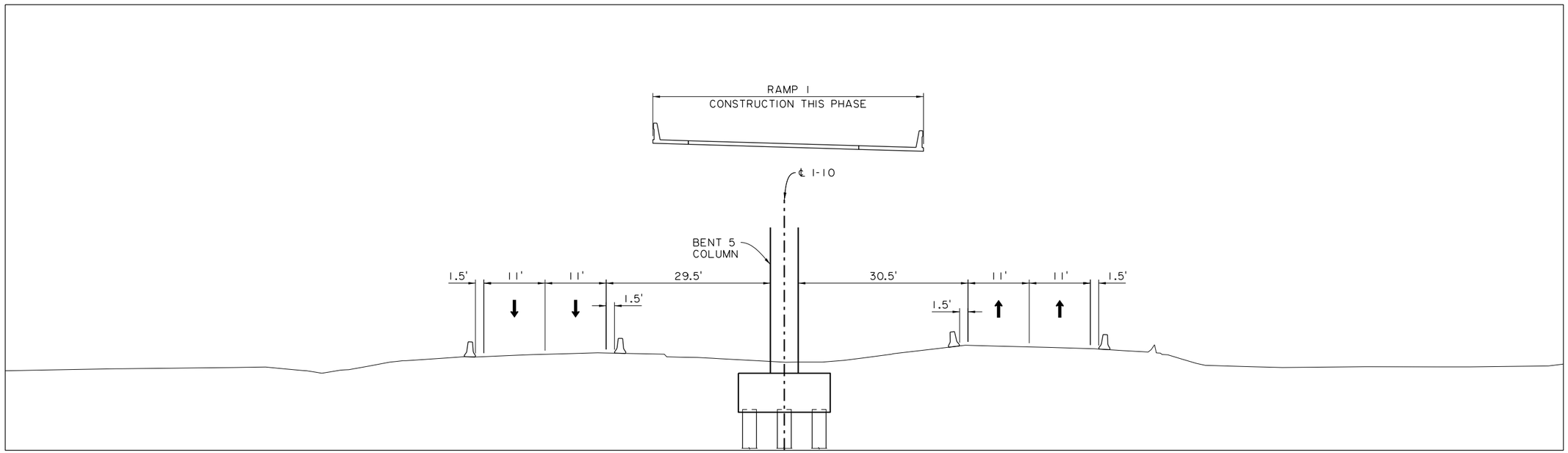

2315+70.00
STAGE 1

SHEET NUMBER	7

PARISH	CONTROL SECTION	STATE PROJECT
CALCASIEU	450-91	H.003931

DESIGN	M. HELMINGER
CHECK	N. HELMINGER
DETAIL	T. DUPUY
CHECK	M. HELMINGER
REVIEW	T. GATTLE
SERIES =	1 OF 5

TECHNICAL PROPOSAL PLANS

PRELIMINARY
NOT FOR CONSTRUCTION

ENGINEER:
GLENN McCALL

LICENSE #:
29639

DATE:
05/10/2023

NO.	DATE	REVISION OR CHANGE ORDER DESCRIPTION	BY

MAINTENANCE OF TRAFFIC
TYPICAL SECTIONS
STATION 2315+70

I-10 CALCASIEU RIVER BRIDGE P3

DOTD LOUISIANA DEPARTMENT OF TRANSPORTATION & DEVELOPMENT

CBP CALCASIEU BRIDGE PARTNERS

TECHNICAL PROPOSAL PLANS
S:\xdrive\HUVAL Projects\7262 (I-10 Calcasieu P3)\05 Drawings\Roadway\Border to Print\X2_MOT_Sections_Station 2315+70.dgn
05/10/2023 08:21:17 AM

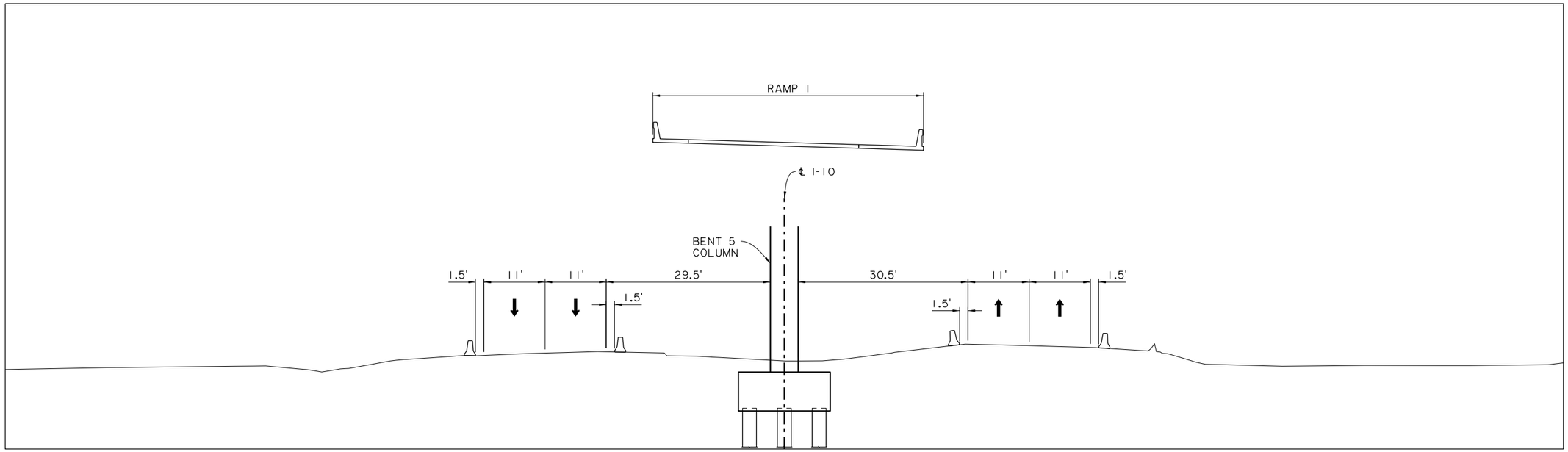

2315+70.00
STAGE 4

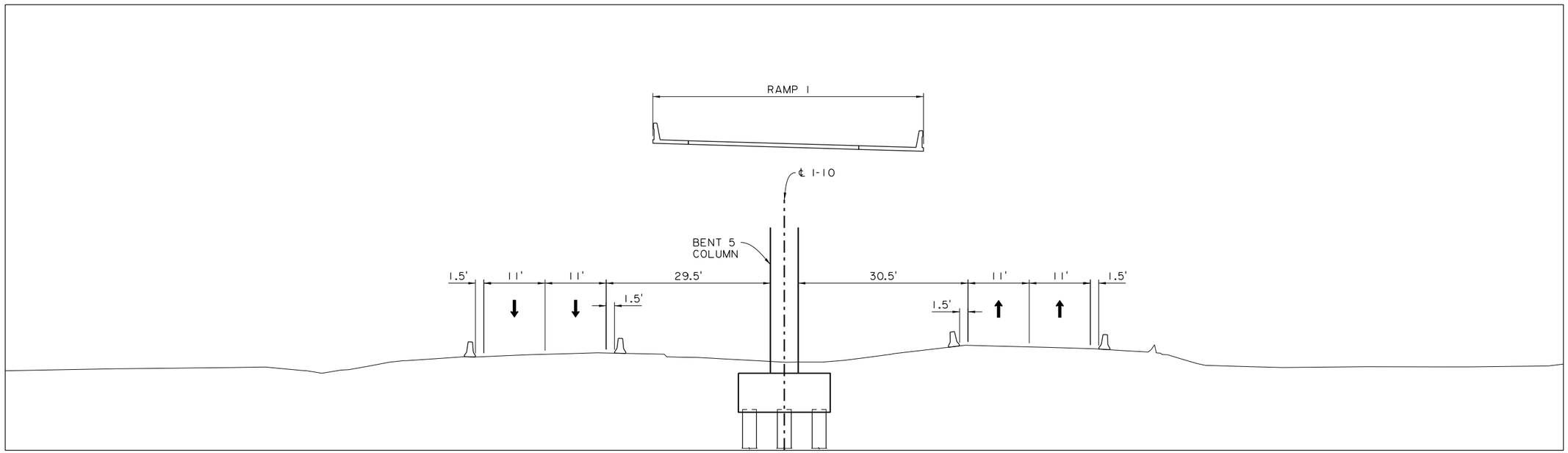

2315+70.00
STAGE 3

SHEET NUMBER	8
PARISH	CALCASIEU
CONTROL SECTION	450-91
STATE PROJECT	H.003931
DESIGN	M. HELMINGER
CHECK	N. HELMINGER
DETAIL	T. DUPUY
CHECK	M. HELMINGER
REVIEW	T. GATTLE
SERIES	2 OF 5

TECHNICAL PROPOSAL PLANS
PRELIMINARY
NOT FOR CONSTRUCTION
ENGINEER: GLENN McCALL
LICENSE #: 29639
DATE: 05/10/2023

NO.	DATE	REVISION OR CHANGE ORDER DESCRIPTION	BY

MAINTENANCE OF TRAFFIC TYPICAL SECTIONS STATION 2315+70

I-10 CALCASIEU RIVER BRIDGE P3

DOTD LOUISIANA DEPARTMENT OF TRANSPORTATION & DEVELOPMENT

CBP CALCASIEU BRIDGE PARTNERS

TECHNICAL PROPOSAL PLANS
S:\xdrive\HUVAL Projects\7262 (I-10 Calcasieu P3)\05 Drawings\Roadway\Border to Print\X2_MOT_Sections_Station 2315+70.dgn
05/10/2023 08:21:17 AM

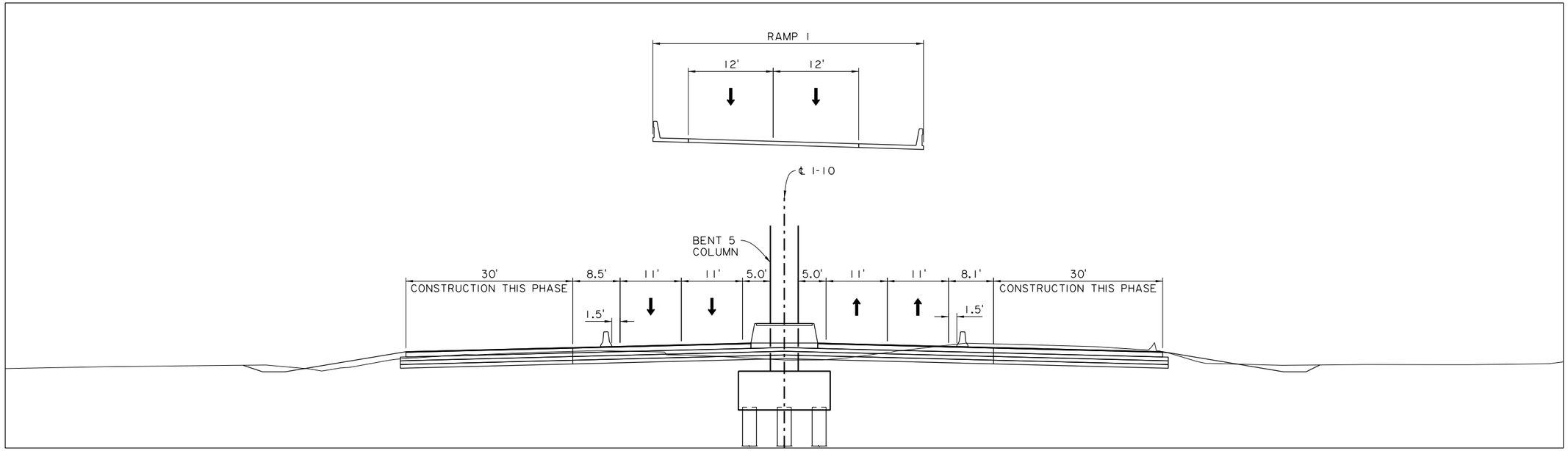

2315+70.00
STAGE 6

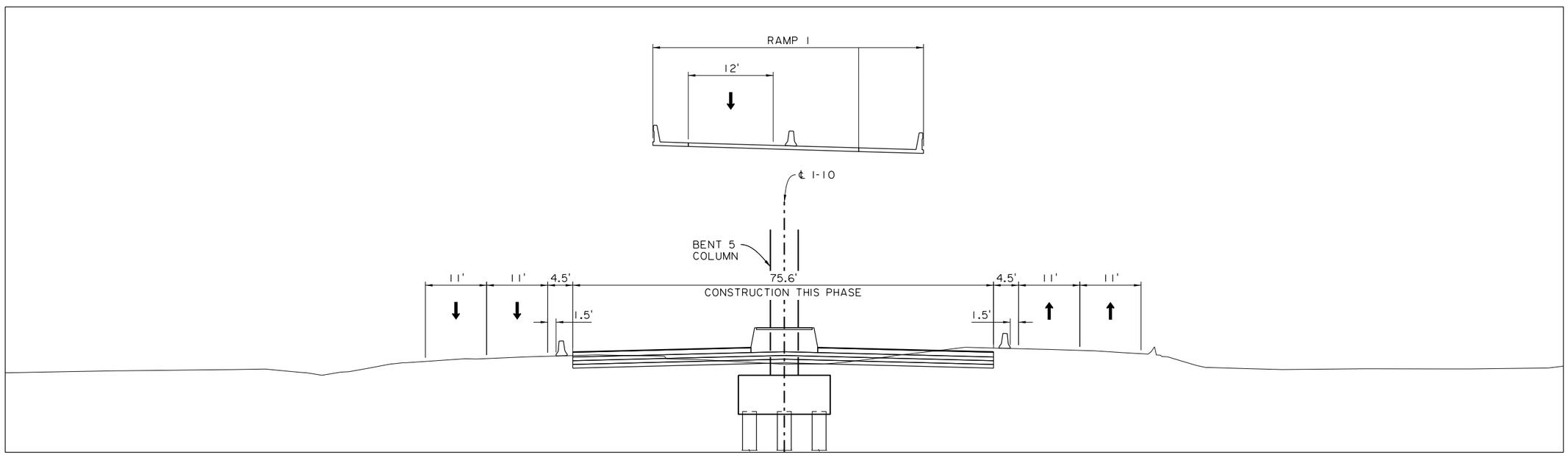

2315+70.00
STAGE 5

SHEET NUMBER 9

PARISH	CONTROL SECTION	STATE PROJECT
CALCASIEU	450-91	H.003931

DESIGN	M. HELMINGER	DETAIL	T. DUPUY	REVIEW	T. GATTLE
CHECK	N. HELMINGER	CHECK	M. HELMINGER	SERIES	3 OF 5

TECHNICAL PROPOSAL PLANS

PRELIMINARY
NOT FOR CONSTRUCTION

ENGINEER:
GLENN McCALL

LICENSE #:
29639

DATE:
05/10/2023

NO.	DATE	REVISION OR CHANGE ORDER DESCRIPTION	BY

MAINTENANCE OF TRAFFIC
TYPICAL SECTIONS
STATION 2315+70

I-10 CALCASIEU RIVER BRIDGE P3

DOTD LOUISIANA DEPARTMENT OF TRANSPORTATION & DEVELOPMENT

CBP CALCASIEU BRIDGE PARTNERS

TECHNICAL PROPOSAL PLANS
S:\xdrive\HUVAL Projects\7262 (I-10 Calcasieu P3)\05 Drawings\Roadway\Border to Print\X2_MOT_Sections_Station 2315+70.dgn
05/10/2023 08:21:17 AM

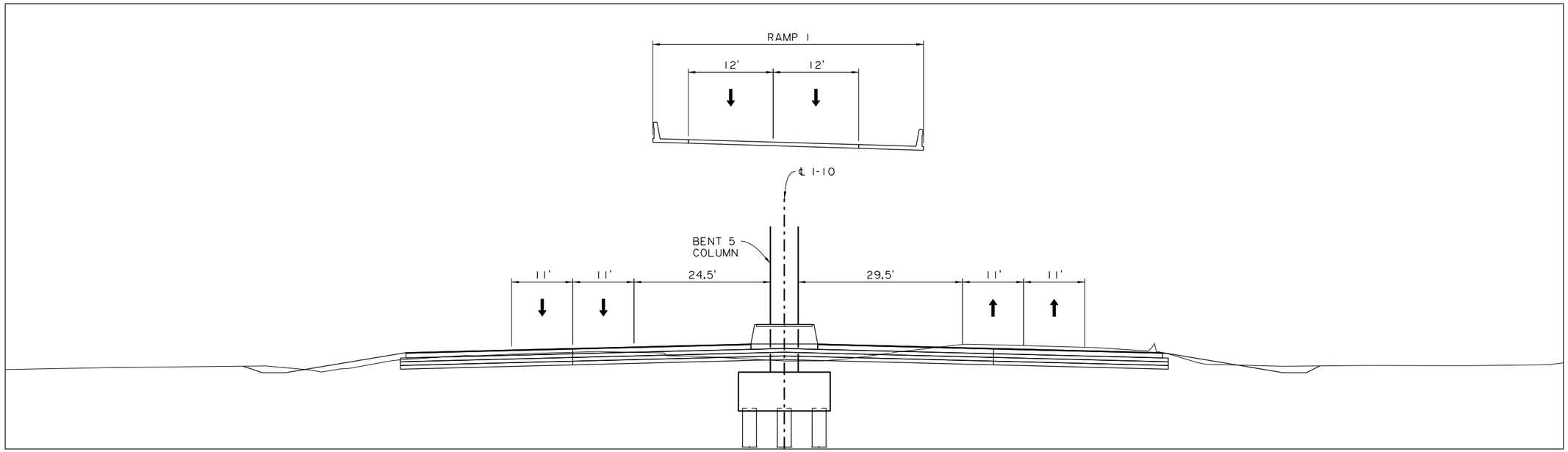

2315+70.00
STAGE 8

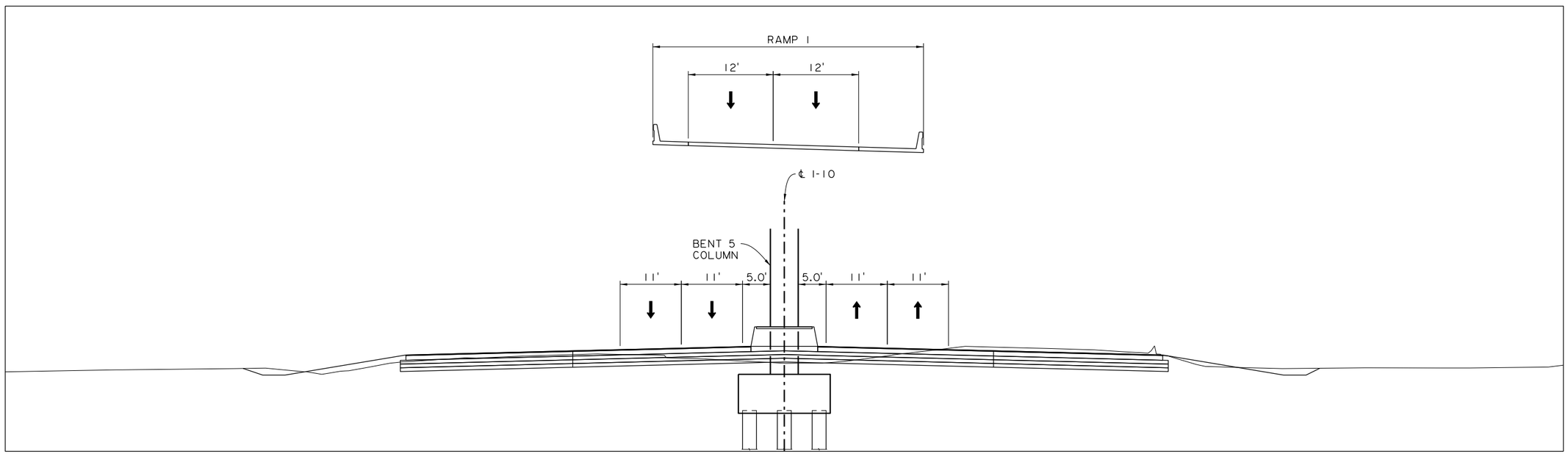

2315+70.00
STAGE 7

SHEET NUMBER	10

PARISH	CONTROL SECTION	STATE PROJECT
CALCASIEU	450-91	H.003931

DESIGN	CHECK	DETAIL	CHECK	REVIEW	SERIES = 4 OF 5
M. HELMINGER	N. HELMINGER	T. DUPUY	M. HELMINGER	T. GATTLE	

TECHNICAL PROPOSAL PLANS

PRELIMINARY
NOT FOR CONSTRUCTION
ENGINEER: GLENN McCALL
LICENSE #: 29639
DATE: 05/10/2023

NO.	DATE	REVISION OR CHANGE ORDER DESCRIPTION	BY

MAINTENANCE OF TRAFFIC TYPICAL SECTIONS STATION 2315+70

I-10 CALCASIEU RIVER BRIDGE P3

DOTD LOUISIANA DEPARTMENT OF TRANSPORTATION & DEVELOPMENT

CBP CALCASIEU BRIDGE PARTNERS

TECHNICAL PROPOSAL PLANS

S:\xdrive\HUVAL Projects\7262 (I-10 Calcasieu P3)\05 Drawings\Roadway\Border to Print\X2_MOT_Sections_Station 2315+70.dgn 05/10/2023 08:21:17 AM

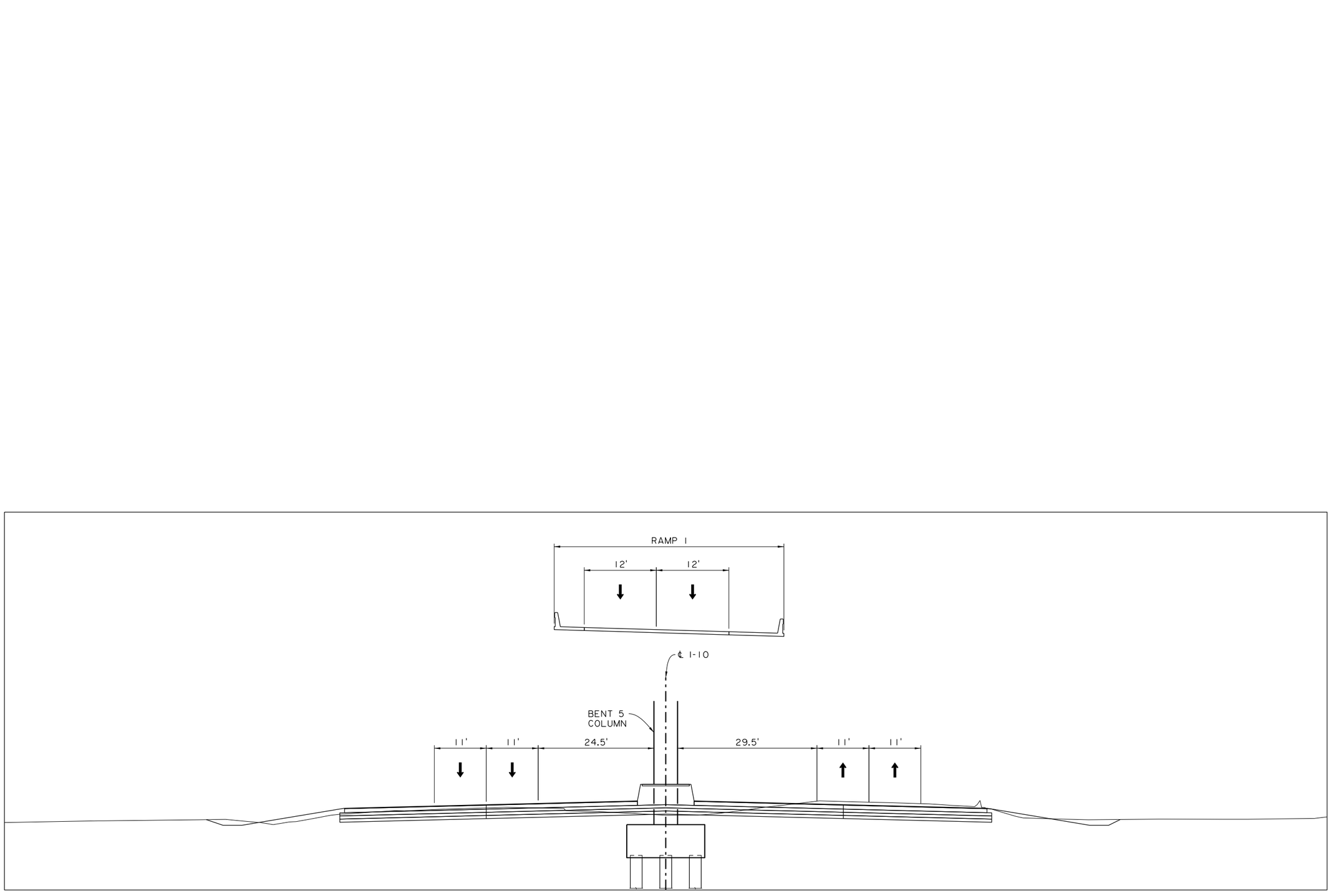

2315+70.00
STAGE 9

SHEET NUMBER	11

PARISH	CONTROL SECTION	STATE PROJECT
CALCASIEU	450-91	H.003931

DESIGN	M. HELMINGER	DETAIL	T. DUPUY	REVIEW	T. GATTLE
CHECK	N. HELMINGER	CHECK	M. HELMINGER	SERIES	5 OF 5

TECHNICAL PROPOSAL PLANS

PRELIMINARY
NOT FOR CONSTRUCTION

ENGINEER:
GLENN McCALL

LICENSE #:
29639

DATE:
05/10/2023

NO.	DATE	REVISION OR CHANGE ORDER DESCRIPTION	BY

MAINTENANCE OF TRAFFIC
TYPICAL SECTIONS
STATION 2315+70

I-10 CALCASIEU RIVER BRIDGE P3

DOTD LOUISIANA DEPARTMENT OF TRANSPORTATION & DEVELOPMENT

CBP CALCASIEU BRIDGE PARTNERS

TECHNICAL PROPOSAL PLANS
S:\xdrive\HUVAL Projects\7262 (I-10 Calcasieu P3)\05 Drawings\Roadway\Border to Print\X3_MOT_Sections_Station 2350+00.dgn
05/10/2023 08:21:18 AM

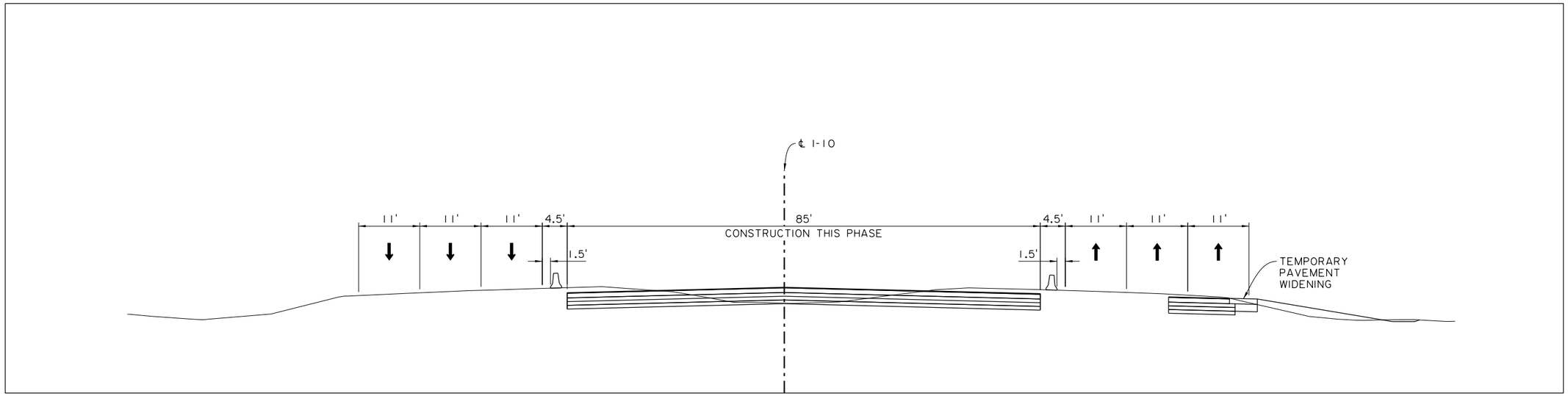

2350+00.00
STAGE 2

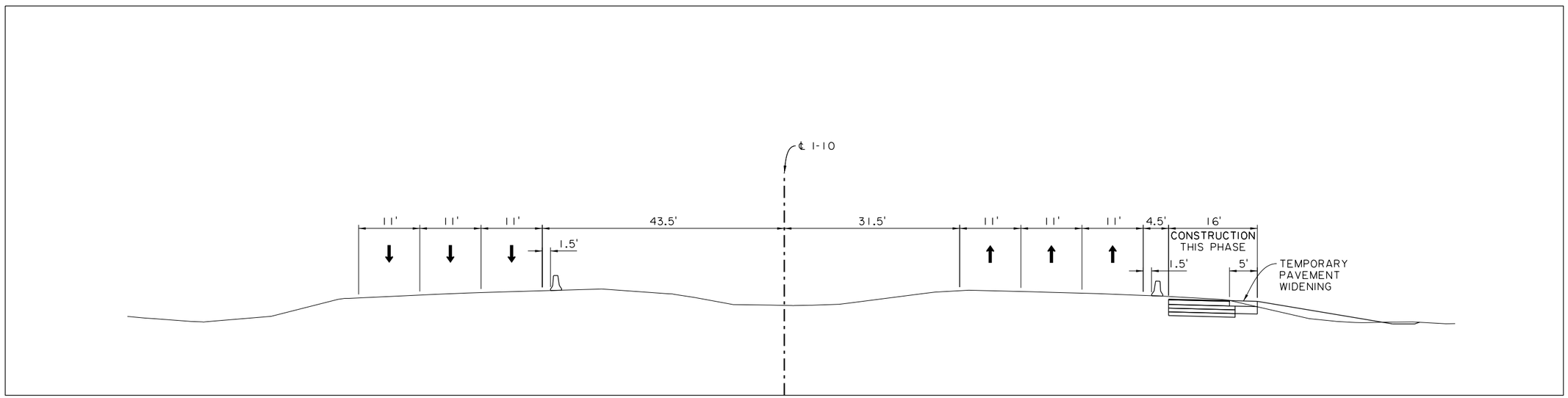

2350+00.00
STAGE 1

SHEET NUMBER 12

PARISH	CONTROL SECTION	STATE PROJECT
CALCASIEU	450-91	H.003931

DESIGN	N. HELMINGER	DETAIL	T. DUPUY	REVIEW T. GATTLE
CHECK		CHECK	M. HELMINGER	SERIES # 1 OF 5

TECHNICAL PROPOSAL PLANS
PRELIMINARY
NOT FOR CONSTRUCTION
ENGINEER: GLENN McCALL
LICENSE #: 29639
DATE: 05/10/2023

NO.	DATE	REVISION OR CHANGE ORDER DESCRIPTION	BY

MAINTENANCE OF TRAFFIC TYPICAL SECTIONS STATION 2350+00

I-10 CALCASIEU RIVER BRIDGE P3

DOTD LOUISIANA DEPARTMENT OF TRANSPORTATION & DEVELOPMENT

CBP CALCASIEU BRIDGE PARTNERS

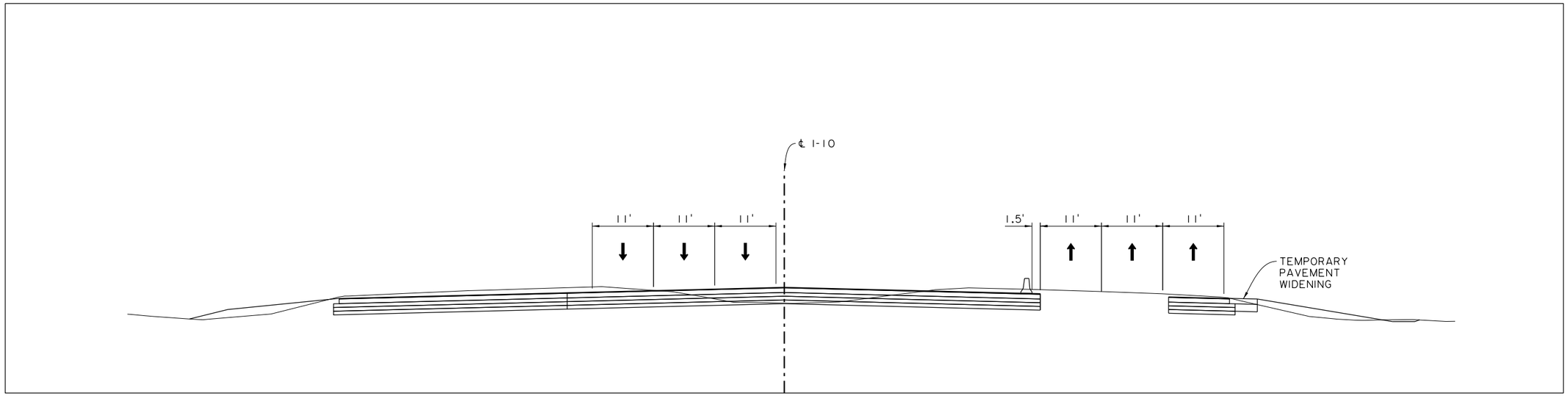

2350+00.00
STAGE 4

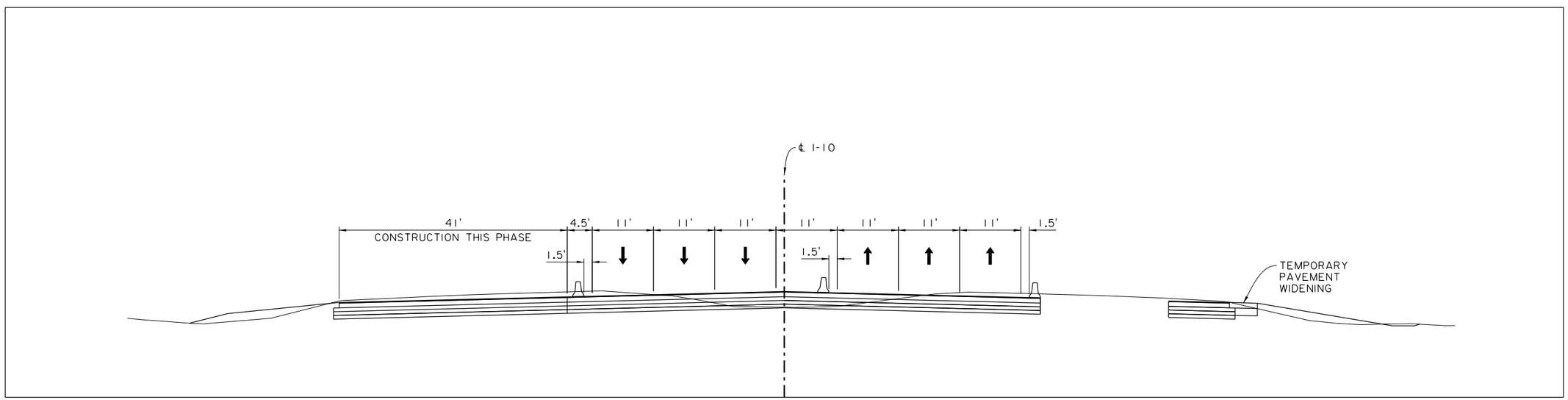

2350+00.00
STAGE 3

TECHNICAL PROPOSAL PLANS

S:\xdrive\HUVAL Projects\7262 (I-10 Calcasieu P3)\05 Drawings\Roadway\Border to Print\X3_MOT_Sections_Station 2350+00.dgn 05/10/2023 08:21:18 AM

SHEET NUMBER	13
PARISH	CALCASIEU
CONTROL SECTION	450-91
STATE PROJECT	H.003931
DESIGN	M. HELMINGER
CHECK	N. HELMINGER
DETAIL	T. DUPUY
CHECK	M. HELMINGER
REVIEW	T. GATTLE
SERIES	2 OF 5

TECHNICAL PROPOSAL PLANS
PRELIMINARY
NOT FOR CONSTRUCTION
ENGINEER: GLENN McCALL
LICENSE #: 29639
DATE: 05/10/2023

NO.	DATE	REVISION OR CHANGE ORDER DESCRIPTION	BY

MAINTENANCE OF TRAFFIC TYPICAL SECTIONS STATION 2350+00

I-10 CALCASIEU RIVER BRIDGE P3

DOTD LOUISIANA DEPARTMENT OF TRANSPORTATION & DEVELOPMENT

CBP CALCASIEU BRIDGE PARTNERS

S:\xdrive\HUVAL Projects\7262 (I-10 Calcasieu P3)\05 Drawings\Roadway\Border to Print\X3_MOT_Sections_Station 2350+00.dgn 05/10/2023 08:21:18 AM

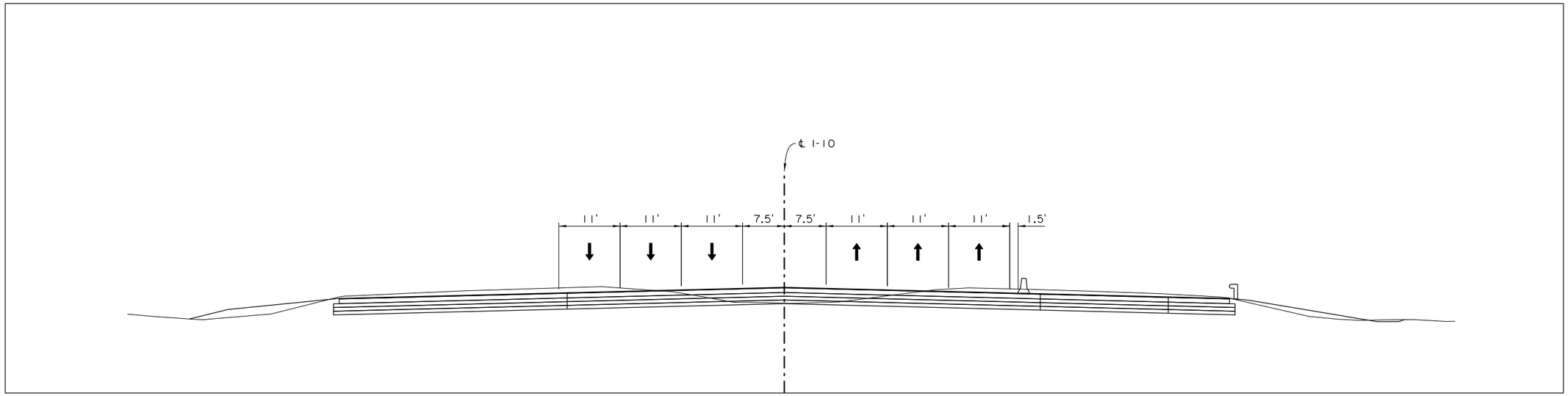

2350+00.00
STAGE 6

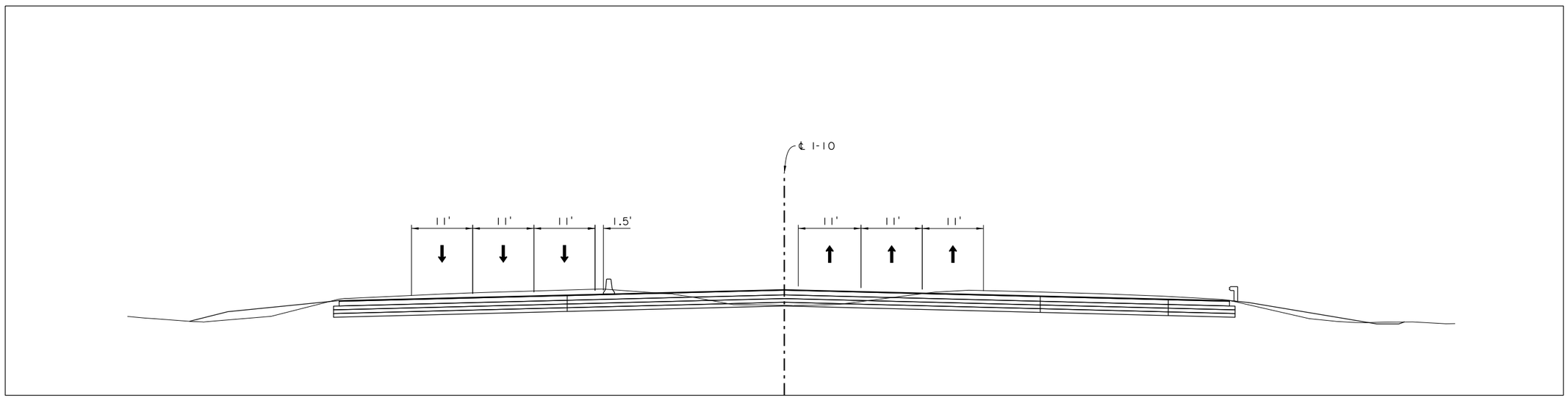

2350+00.00
STAGE 5

SHEET NUMBER	14

PARISH	CONTROL SECTION	STATE PROJECT
CALCASIEU	450-91	H.003931

DESIGN	M. HELMINGER
CHECK	N. HELMINGER
DETAIL	T. DUPUY
CHECK	M. HELMINGER
REVIEW	T. GATTLE
SERIES = 3 OF 5	

TECHNICAL PROPOSAL PLANS

PRELIMINARY
NOT FOR CONSTRUCTION
ENGINEER: GLENN McCALL
LICENSE #: 29639
DATE: 05/10/2023

NO.	DATE	REVISION OR CHANGE ORDER DESCRIPTION	BY

MAINTENANCE OF TRAFFIC TYPICAL SECTIONS STATION 2350+00

I-10 CALCASIEU RIVER BRIDGE P3

DOTD LOUISIANA DEPARTMENT OF TRANSPORTATION & DEVELOPMENT

CBP CALCASIEU BRIDGE PARTNERS

TECHNICAL PROPOSAL PLANS
S:\xdrive\HUVAL Projects\7262 (I-10 Calcasieu P3)\05 Drawings\Roadway\Border to Print\X3_MOT_Sections_Station 2350+00.dgn
05/10/2023 08:21:18 AM

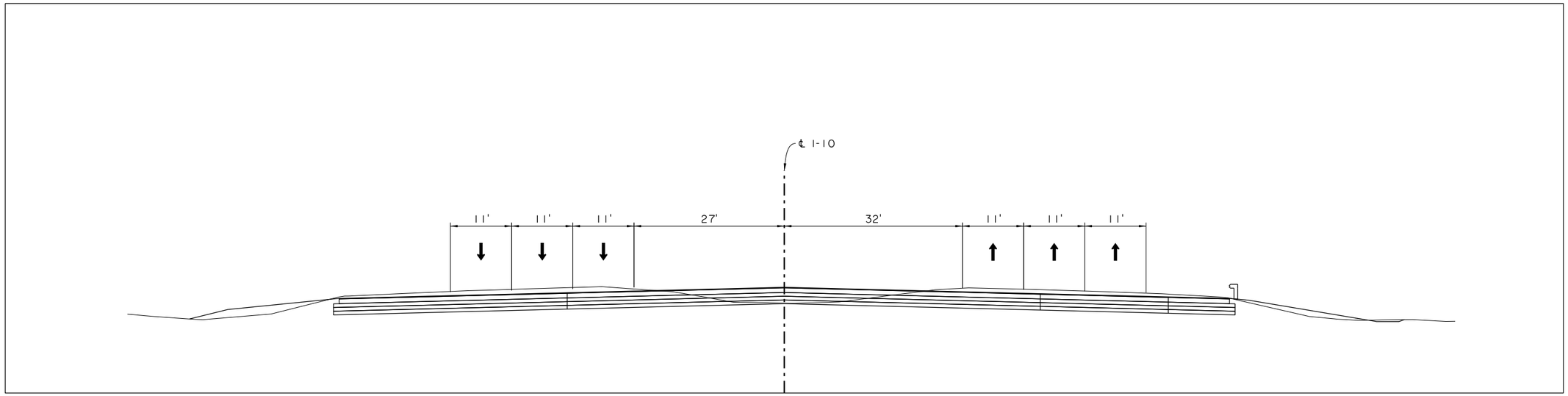

2350+00.00
STAGE 8

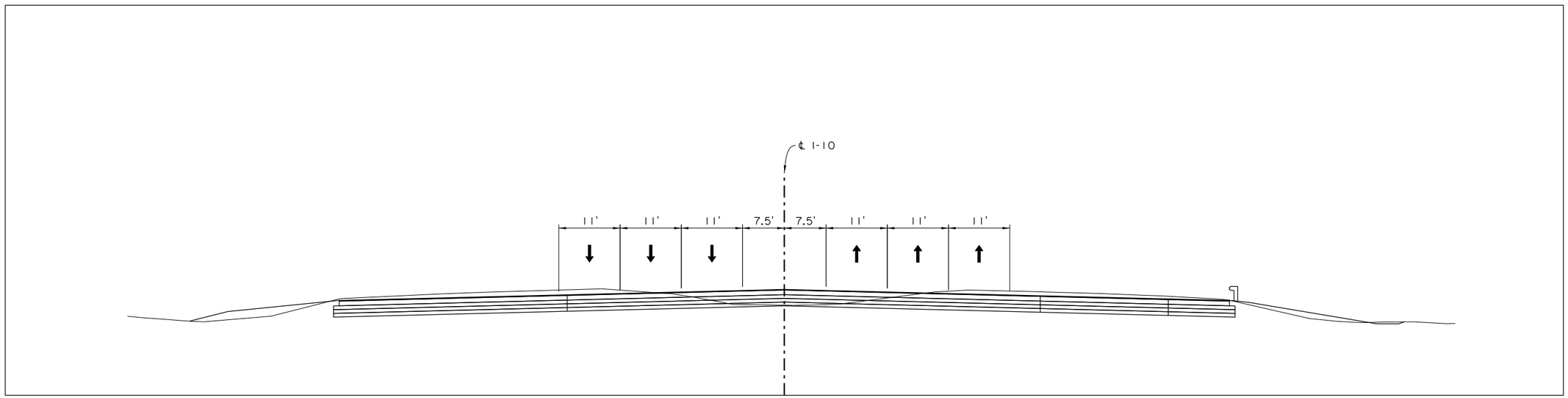

2350+00.00
STAGE 7

SHEET NUMBER	15

PARISH	CONTROL SECTION	STATE PROJECT
CALCASIEU	450-91	H.003931

DESIGN	M. HELMINGER	DETAIL	T. DUPUY	REVIEW	T. GATTLE
CHECK	N. HELMINGER	CHECK	M. HELMINGER	SERIES	4 OF 5

TECHNICAL PROPOSAL PLANS

PRELIMINARY
NOT FOR CONSTRUCTION

ENGINEER:
GLENN McCALL

LICENSE #:
29639

DATE:
05/10/2023

NO.	DATE	REVISION OR CHANGE ORDER DESCRIPTION	BY

MAINTENANCE OF TRAFFIC
TYPICAL SECTIONS
STATION 2350+00

I-10 CALCASIEU RIVER BRIDGE P3

DOTD LOUISIANA DEPARTMENT OF TRANSPORTATION & DEVELOPMENT

CBP CALCASIEU BRIDGE PARTNERS

TECHNICAL PROPOSAL PLANS
S:\xdrive\HUVAL Projects\7262 (I-10 Calcasieu P3)\05 Drawings\Roadway\Border to Print\X3_MOT_Sections_Station 2350+00.dgn 05/10/2023 08:21:19 AM

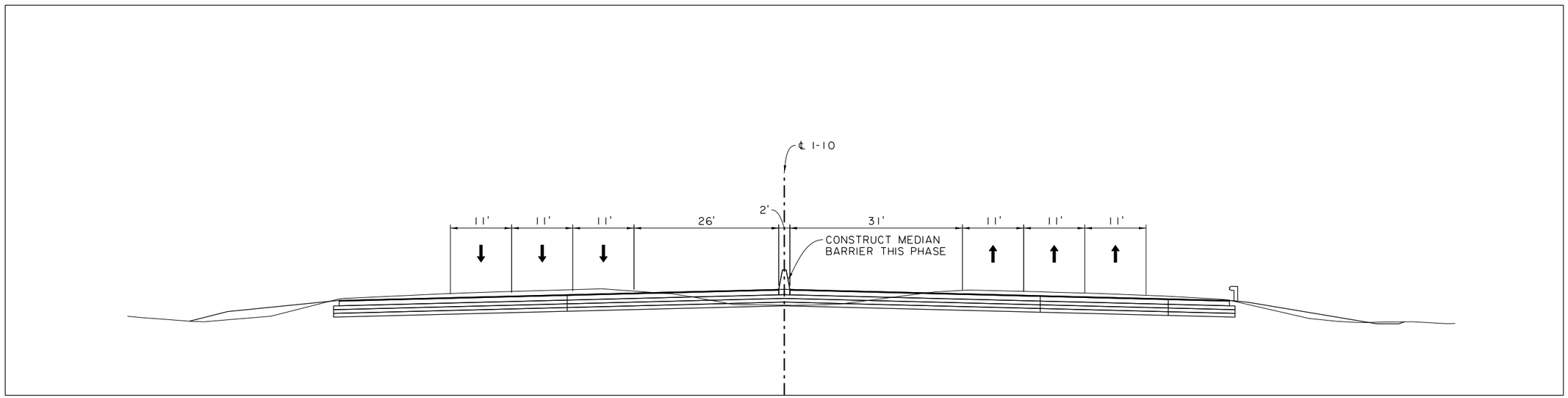

2350+00.00
STAGE 9

SHEET NUMBER	16
PARISH	CALCASIEU
CONTROL SECTION	450-91
STATE PROJECT	H.003931

DESIGN	M. HELMINGER	DETAIL	T. DUPUY
CHECK	N. HELMINGER	CHECK	M. HELMINGER
REVIEW	T. GATTLE	SERIES = 5 OF 5	

TECHNICAL PROPOSAL PLANS

PRELIMINARY
NOT FOR CONSTRUCTION

ENGINEER:
GLENN McCALL

LICENSE #:
29639

DATE:
05/10/2023

NO.	DATE	REVISION OR CHANGE ORDER DESCRIPTION	BY

MAINTENANCE OF TRAFFIC
TYPICAL SECTIONS
STATION 2350+00

I-10 CALCASIEU RIVER BRIDGE P3

DOTD LOUISIANA DEPARTMENT OF TRANSPORTATION & DEVELOPMENT

CBP CALCASIEU BRIDGE PARTNERS

TECHNICAL PROPOSAL PLANS
S:\xdrive\HUVAL Projects\7262 (I-10 Calcasieu P3)\05 Drawings\Roadway\Border to Print\X4_MOT_Sections_Station 1210+00.dgn
05/10/2023 08:21:19 AM

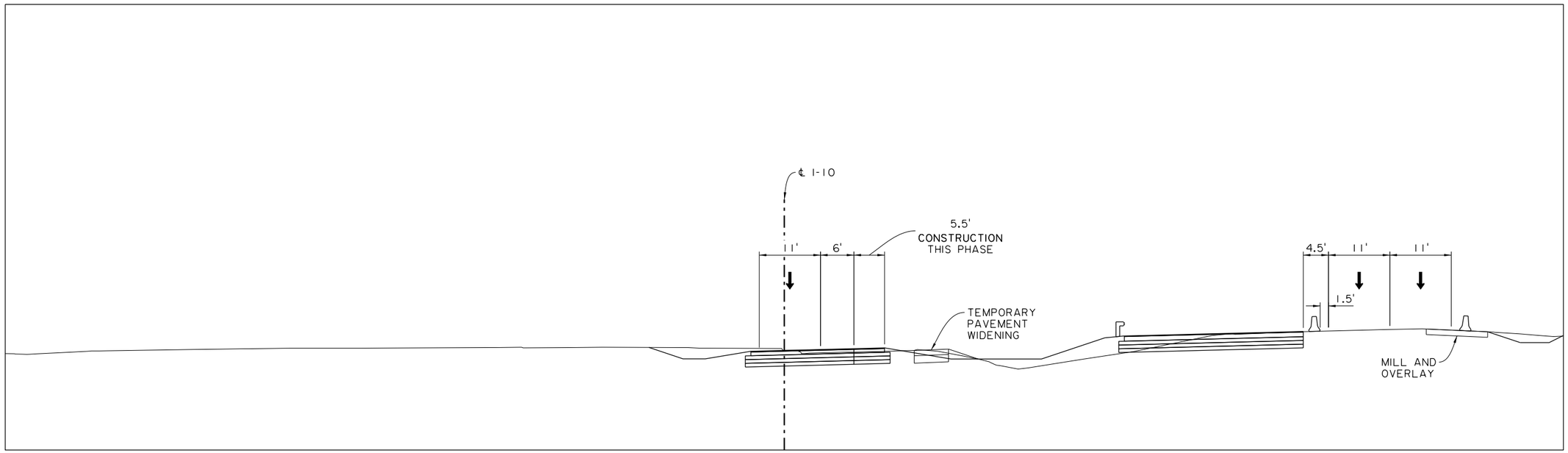

1210+00.00
STAGE 2

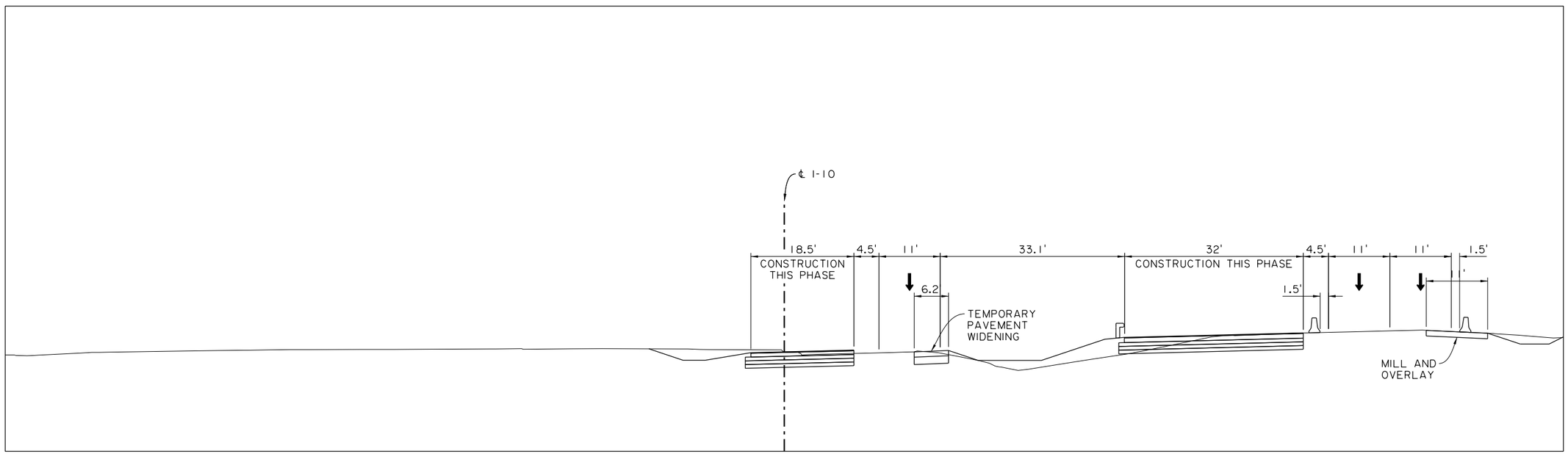

1210+00.00
STAGE 1

SHEET NUMBER	17
PARISH	CALCASIEU
CONTROL SECTION	450-91
STATE PROJECT	H.003931

DESIGN	M. HELMINGER	DETAIL	T. DUPUY	REVIEW	T. GATTLE
CHECK	N. HELMINGER	CHECK	M. HELMINGER	SERIES	1 OF 5

TECHNICAL PROPOSAL PLANS
PRELIMINARY
NOT FOR CONSTRUCTION
ENGINEER:
GLENN McCALL
LICENSE #:
29639
DATE:
05/10/2023

NO.	DATE	REVISION OR CHANGE ORDER DESCRIPTION	BY

MAINTENANCE OF TRAFFIC TYPICAL SECTIONS STATION 1210+00

I-10 CALCASIEU RIVER BRIDGE P3

DOTD LOUISIANA DEPARTMENT OF TRANSPORTATION & DEVELOPMENT

CBP CALCASIEU BRIDGE PARTNERS

TECHNICAL PROPOSAL PLANS
S:\xdrive\HUVAL Projects\7262 (I-10 Calcasieu P3)\05 Drawings\Roadway\Border to Print\X4_MOT_Sections_Station 1210+00.dgn
05/10/2023 08:21:19 AM

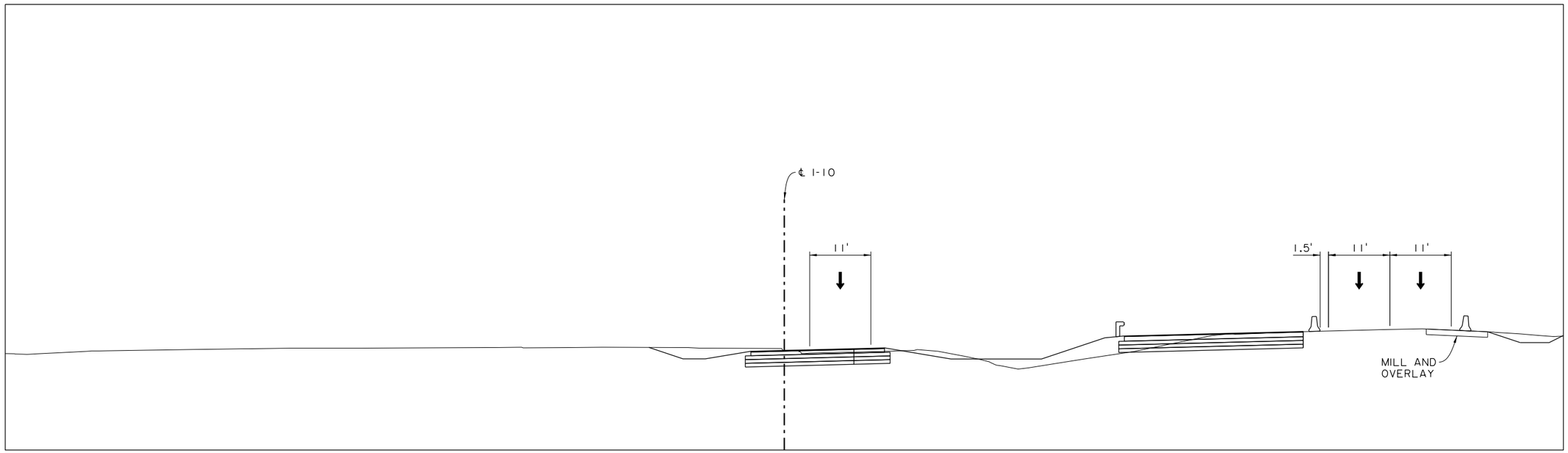

1210+00.00
STAGE 4

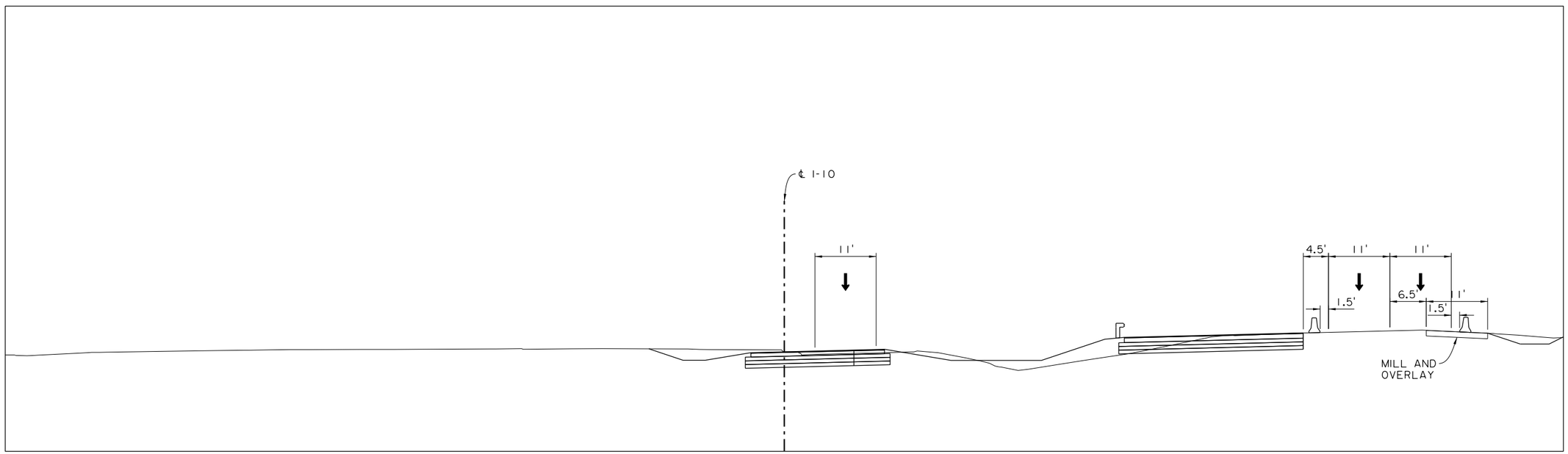

1210+00.00
STAGE 3

SHEET NUMBER	18

PARISH	CONTROL SECTION	STATE PROJECT
CALCASIEU	450-91	H.003931

DESIGN	M. HELMINGER
CHECK	N. HELMINGER
DETAIL	T. DUPUY
CHECK	M. HELMINGER
REVIEW	T. GATTLE
SERIES =	2 OF 5

TECHNICAL PROPOSAL PLANS

PRELIMINARY
NOT FOR CONSTRUCTION

ENGINEER:
GLENN McCALL

LICENSE #:
29639

DATE:
05/10/2023

NO.	DATE	REVISION OR CHANGE ORDER DESCRIPTION	BY

MAINTENANCE OF TRAFFIC
TYPICAL SECTIONS
STATION 1210+00

I-10 CALCASIEU RIVER BRIDGE P3

DOTD
LOUISIANA DEPARTMENT OF TRANSPORTATION & DEVELOPMENT

CBP
CALCASIEU BRIDGE PARTNERS

TECHNICAL PROPOSAL PLANS
S:\xdrive\HUVAL Projects\7262 (I-10 Calcasieu P3)\05 Drawings\Roadway\Border to Print\X4_MOT_Sections_Station 1210+00.dgn
05/10/2023 08:21:19 AM

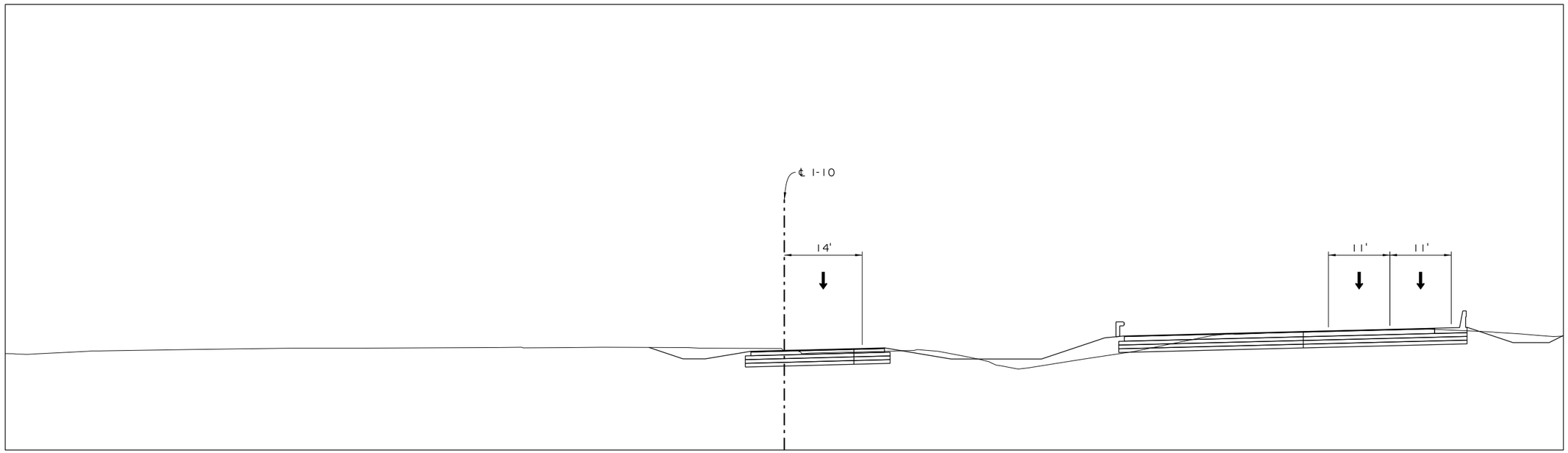

1210+00.00
STAGE 6

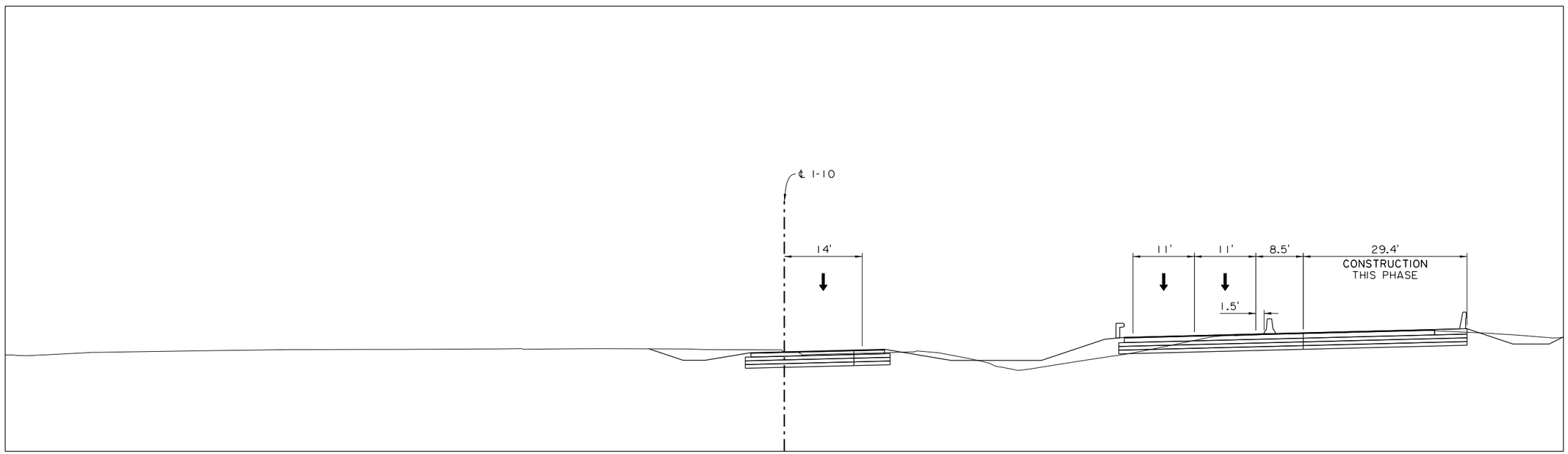

1210+00.00
STAGE 5

SHEET NUMBER	19
PARISH	CALCASIEU
CONTROL SECTION	450-91
STATE PROJECT	H.003931
DESIGN	M. HELMINGER
CHECK	N. HELMINGER
DETAIL	T. DUPUY
CHECK	M. HELMINGER
REVIEW	T. GATTLE
SERIES	3 OF 5

TECHNICAL PROPOSAL PLANS
PRELIMINARY
NOT FOR CONSTRUCTION
ENGINEER: GLENN McCALL
LICENSE #: 29639
DATE: 05/10/2023

NO.	DATE	REVISION OR CHANGE ORDER DESCRIPTION	BY

MAINTENANCE OF TRAFFIC
TYPICAL SECTIONS
STATION 1210+00

I-10 CALCASIEU RIVER BRIDGE P3

DOTD LOUISIANA DEPARTMENT OF TRANSPORTATION & DEVELOPMENT

CBP CALCASIEU BRIDGE PARTNERS

TECHNICAL PROPOSAL PLANS
S:\xdrive\HUVAL Projects\7262 (I-10 Calcasieu P3)\05 Drawings\Roadway\Border to Print\X4_MOT_Sections_Station 1210+00.dgn
05/10/2023 08:21:20 AM

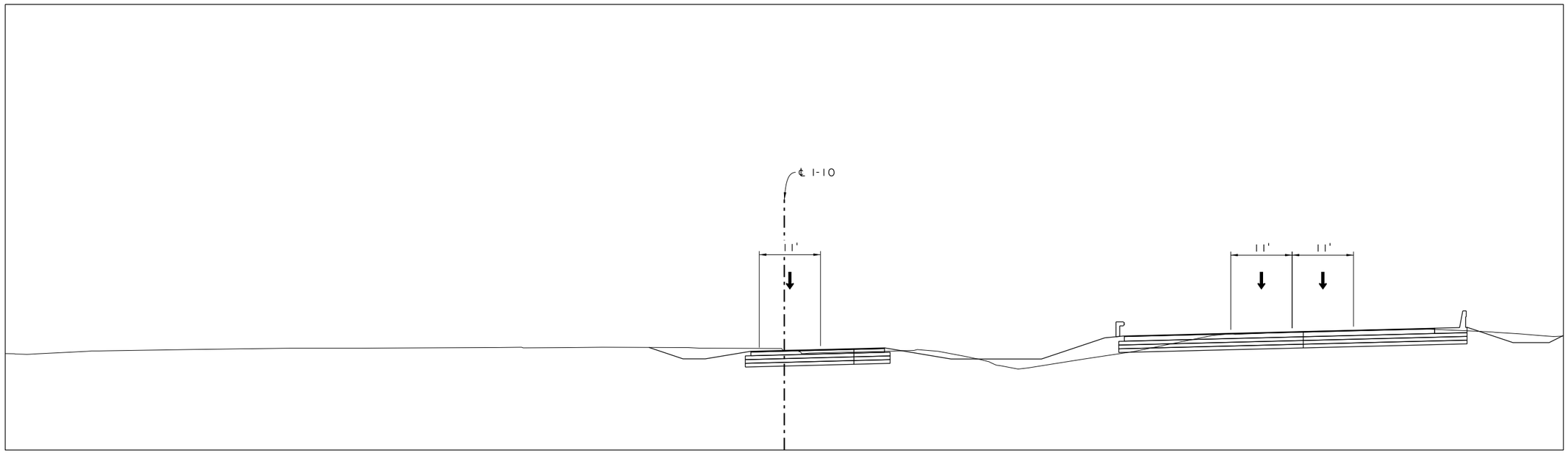

1210+00.00
STAGE 8

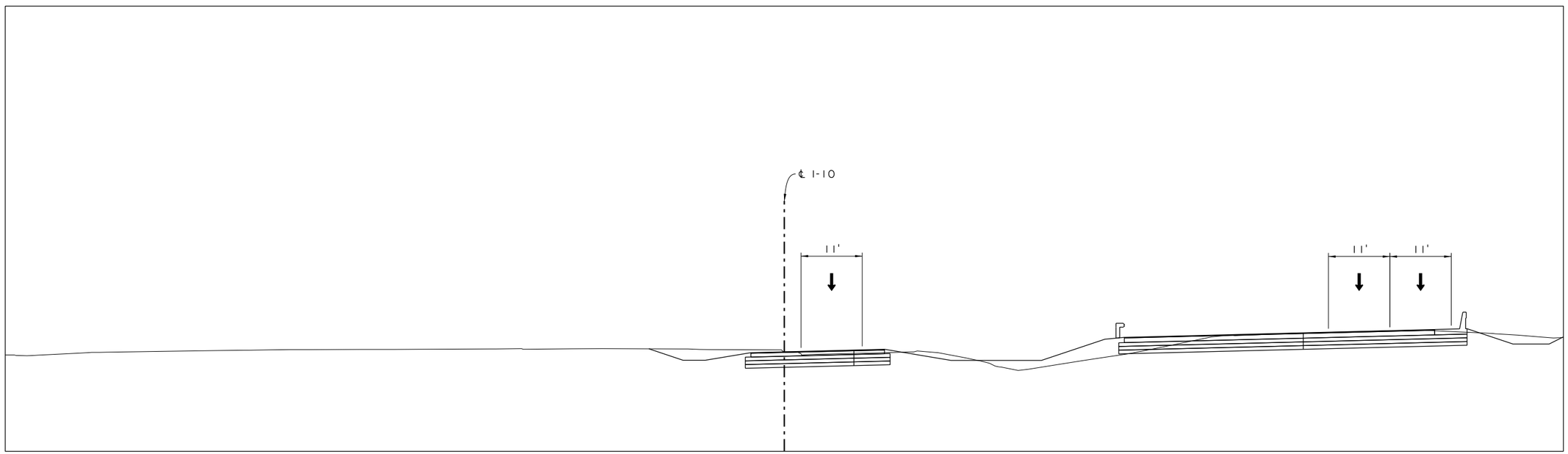

1210+00.00
STAGE 7

SHEET NUMBER	20
PARISH	CALCASIEU
CONTROL SECTION	450-91
STATE PROJECT	H.003931

DESIGN	M. HELMINGER	DETAIL	T. DUPUY	T. GATTLE
CHECK	N. HELMINGER	CHECK	M. HELMINGER	SERIES = 4 OF 5

TECHNICAL PROPOSAL PLANS

PRELIMINARY
NOT FOR CONSTRUCTION
ENGINEER: GLENN McCALL
LICENSE #: 29639
DATE: 05/10/2023

NO.	DATE	REVISION OR CHANGE ORDER DESCRIPTION	BY

MAINTENANCE OF TRAFFIC
TYPICAL SECTIONS
STATION 1210+00

I-10 CALCASIEU RIVER BRIDGE P3

DOTD LOUISIANA DEPARTMENT OF TRANSPORTATION & DEVELOPMENT

CBP CALCASIEU BRIDGE PARTNERS

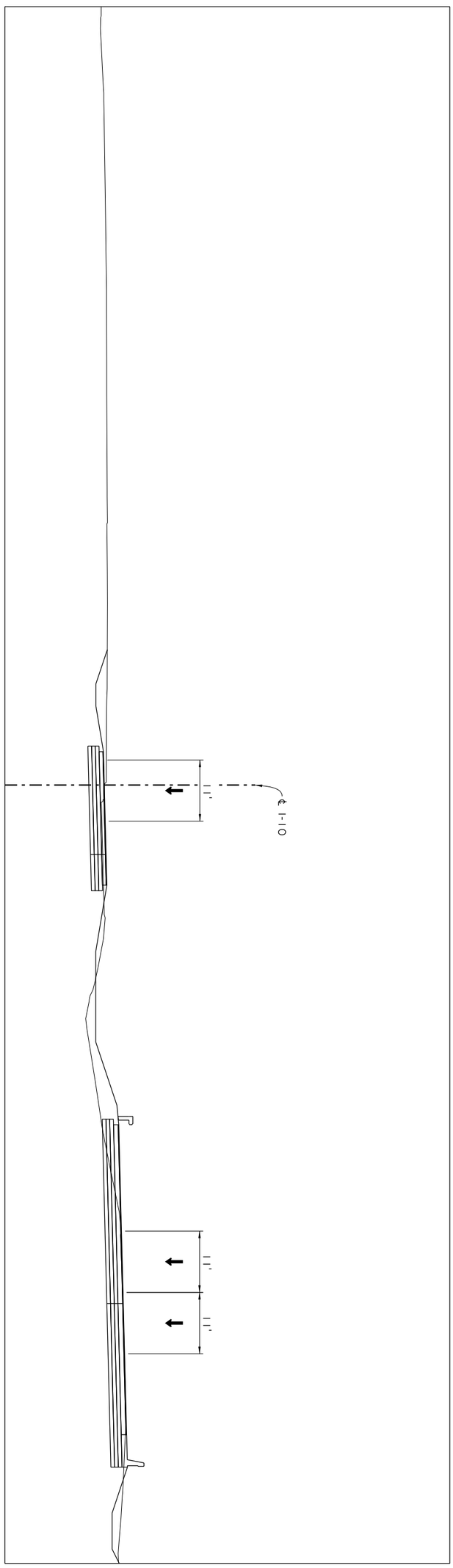

CALCASIEU BRIDGE PARTNERS

DOTD LOUISIANA DEPARTMENT OF TRANSPORTATION & DEVELOPMENT

MAINTENANCE OF TRAFFIC TYPICAL SECTIONS STATION 1210+00

I-10 CALCASIEU RIVER BRIDGE P3

NO.	DATE	REVISION OR CHANGE ORDER DESCRIPTION	BY

TECHNICAL PROPOSAL PLANS
PRELIMINARY
NOT FOR CONSTRUCTION
ENGINEER: GLENN MCCALL
LICENSE #: 29639
DATE: 05/10/2023

DESIGN	M. HELMINGER
CHECK	N. HELMINGER
DETAIL	T. DUPUY
CHECK	M. HELMINGER
REVIEW	T. GATTLE
SERIES #	5 OF 5

PARISH	CALCASIEU
CONTROL SECTION	450-91
STATE PROJECT	H.003931

SHEET NUMBER 21

TECHNICAL PROPOSAL PLANS
S:\xdrive\HUVAL Projects\7262 (I-10 Calcasieu P3)\05 Drawings\Roadway\Border to Print\X5_MOT_Sections_Station 2398+00.dgn
05/10/2023 08:21:20 AM

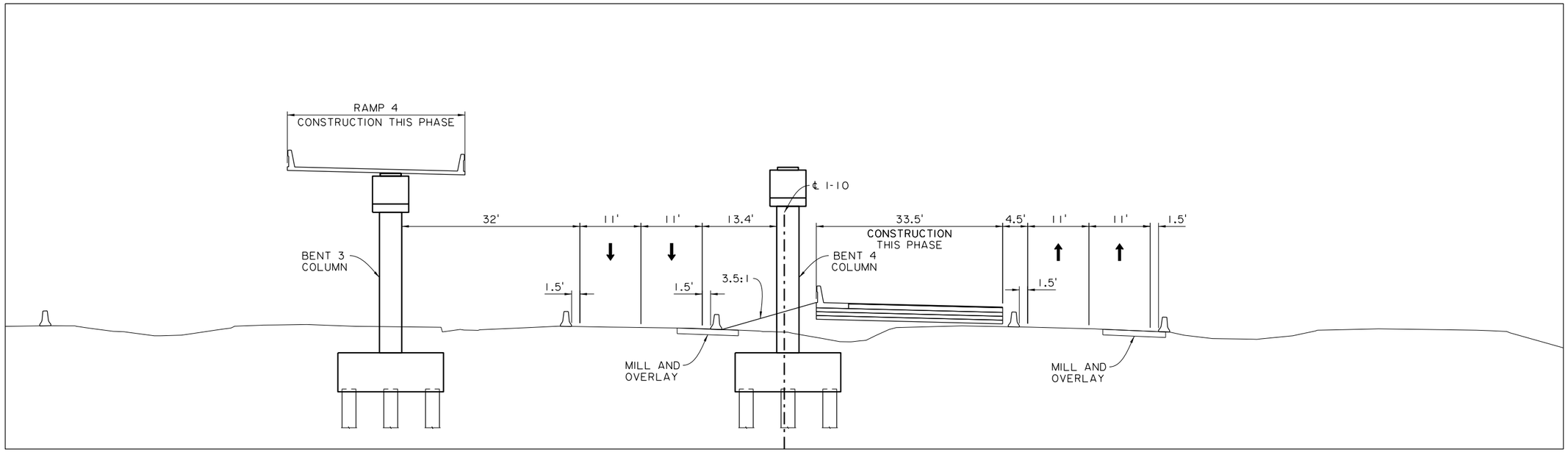

2398+00.00
STAGE 2

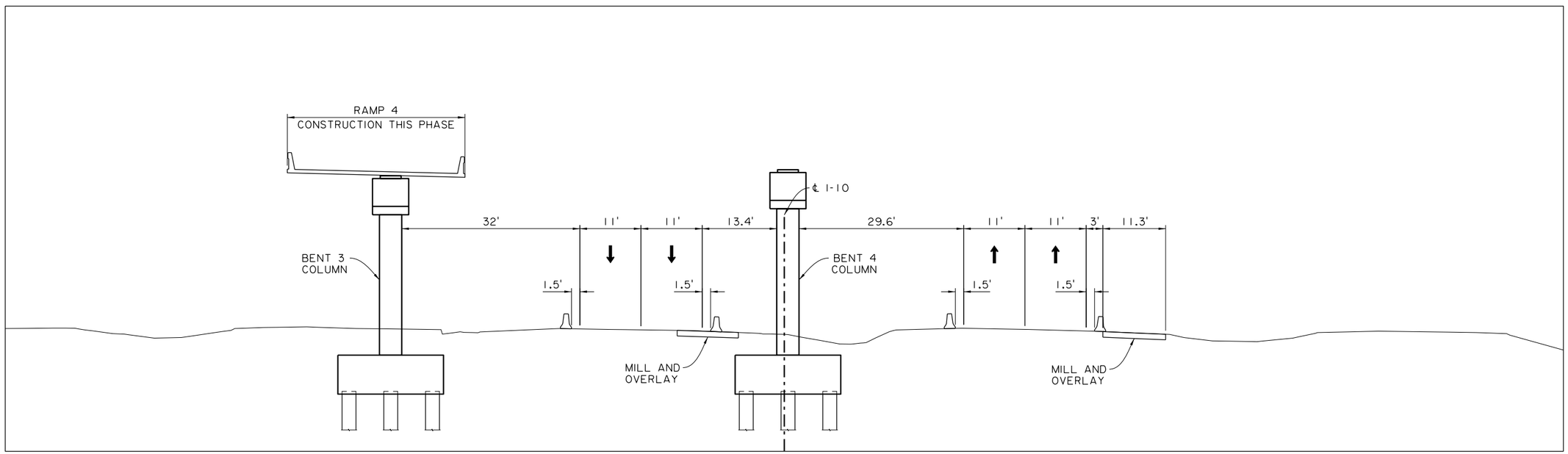

2398+00.00
STAGE 1

SHEET NUMBER	22
PARISH	CALCASIEU
CONTROL SECTION	450-91
STATE PROJECT	H.003931
DESIGN	M. HELMINGER
CHECK	N. HELMINGER
DETAIL	T. DUPUY
CHECK	M. HELMINGER
REVIEW	T. GATTLE
SERIES	1 OF 5

TECHNICAL PROPOSAL PLANS

PRELIMINARY
NOT FOR CONSTRUCTION

ENGINEER:
GLENN McCALL

LICENSE #:
29639

DATE:
05/10/2023

NO.	DATE	REVISION OR CHANGE ORDER DESCRIPTION	BY

MAINTENANCE OF TRAFFIC
TYPICAL SECTIONS
STATION 2398+00

I-10 CALCASIEU RIVER BRIDGE P3

DOTD LOUISIANA DEPARTMENT OF TRANSPORTATION & DEVELOPMENT

CBP CALCASIEU BRIDGE PARTNERS

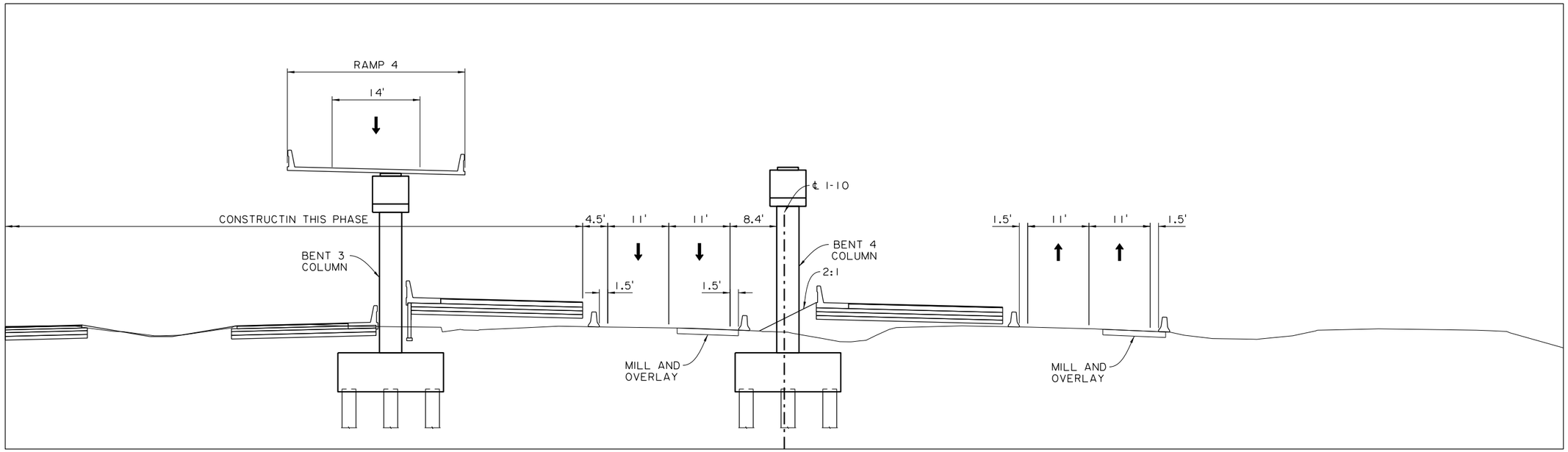

2398+00.00
STAGE 4

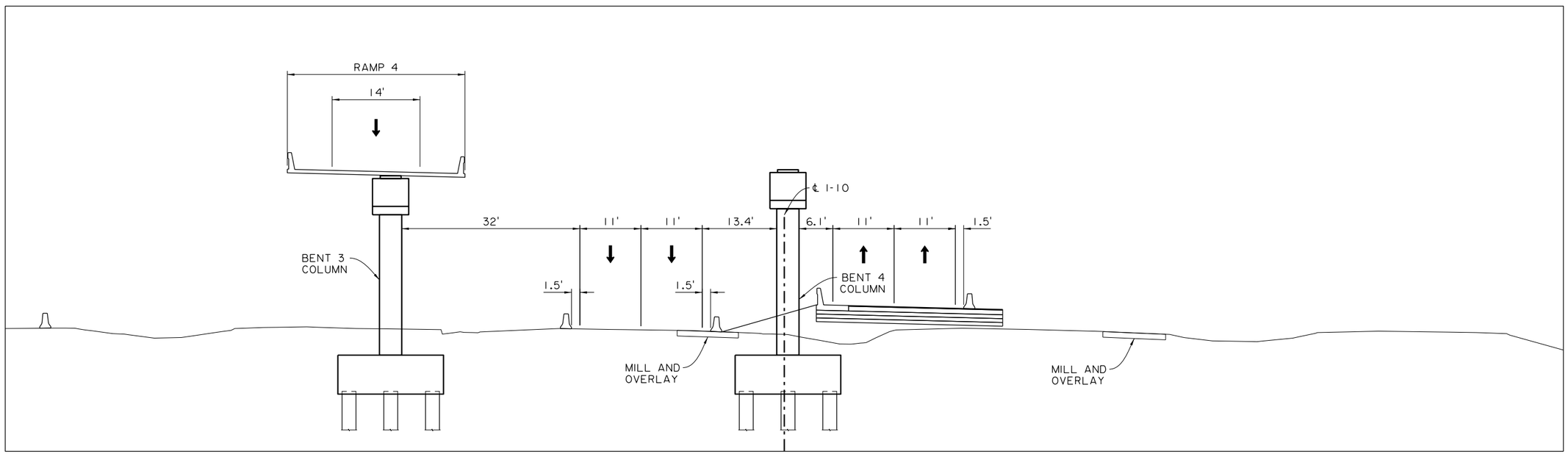

2398+00.00
STAGE 3

TECHNICAL PROPOSAL PLANS

S:\xdrive\HUVAL Projects\7262 (I-10 Calcasieu P3)\05 Drawings\Roadway\Border to Print\X5_MOT_Sections_Station 2398+00.dgn 05/10/2023 08:21:20 AM

SHEET NUMBER	23

PARISH	CONTROL SECTION	STATE PROJECT
CALCASIEU	450-91	H.003931

DESIGN	M. HELMINGER
CHECK	N. HELMINGER
DETAIL	T. DUPUY
CHECK	M. HELMINGER
REVIEW	T. GATTLE
SERIES = 2 OF 5	

TECHNICAL PROPOSAL PLANS

PRELIMINARY
NOT FOR CONSTRUCTION

ENGINEER:
GLENN McCALL

LICENSE #:
29639

DATE:
05/10/2023

NO.	DATE	REVISION OR CHANGE ORDER DESCRIPTION	BY

MAINTENANCE OF TRAFFIC TYPICAL SECTIONS STATION 2398+00

I-10 CALCASIEU RIVER BRIDGE P3

DOTD LOUISIANA DEPARTMENT OF TRANSPORTATION & DEVELOPMENT

CBP CALCASIEU BRIDGE PARTNERS

TECHNICAL PROPOSAL PLANS
S:\xdrive\HUVAL Projects\7262 (I-10 Calcasieu P3)\05 Drawings\Roadway\Border to Print\X5_MOT_Sections_Station 2398+00.dgn
05/10/2023 08:21:21 AM

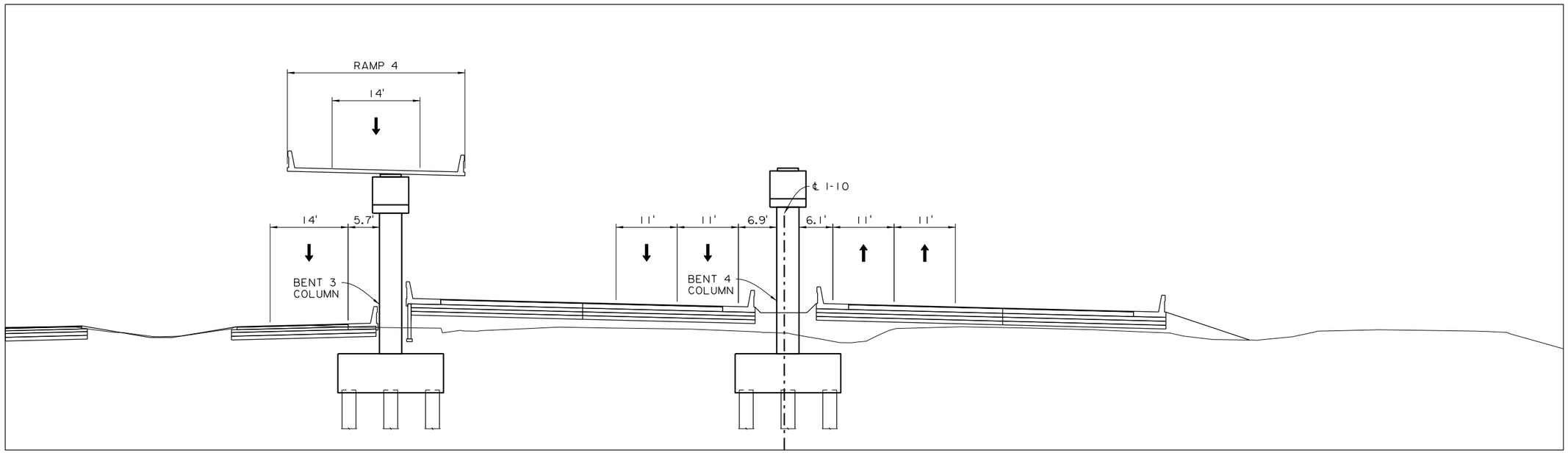

2398+00.00
STAGE 6

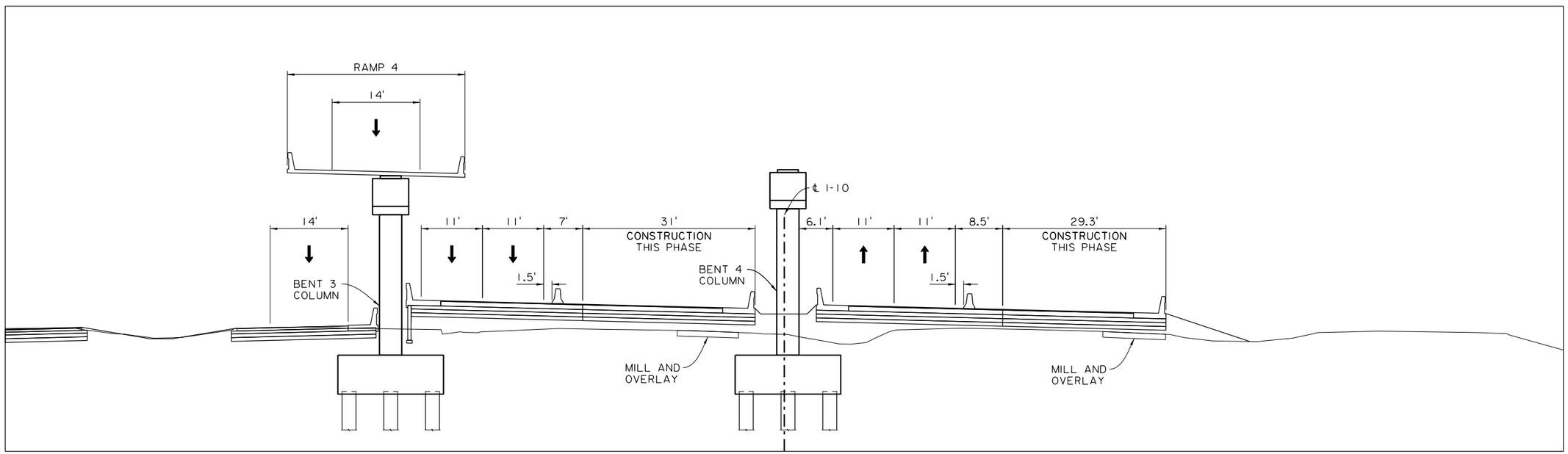

2398+00.00
STAGE 5

SHEET NUMBER	24
PARISH	CALCASIEU
CONTROL SECTION	450-91
STATE PROJECT	H.003931
DESIGN	M. HELMINGER
CHECK	N. HELMINGER
DETAIL	T. DUPUY
CHECK	M. HELMINGER
REVIEW	T. GATTLE
SERIES = 3 OF 5	

TECHNICAL PROPOSAL PLANS

PRELIMINARY
NOT FOR CONSTRUCTION
ENGINEER: GLENN McCALL
LICENSE #: 29639
DATE: 05/10/2023

NO.	DATE	REVISION OR CHANGE ORDER DESCRIPTION	BY

MAINTENANCE OF TRAFFIC
TYPICAL SECTIONS
STATION 2398+00

I-10 CALCASIEU RIVER BRIDGE P3

DOTD LOUISIANA DEPARTMENT OF TRANSPORTATION & DEVELOPMENT

CBP CALCASIEU BRIDGE PARTNERS

TECHNICAL PROPOSAL PLANS
S:\xdrive\HUVAL Projects\7262 (I-10 Calcasieu P3)\05 Drawings\Roadway\Border to Print\X5_MOT_Sections_Station 2398+00.dgn
05/10/2023 08:21:21 AM

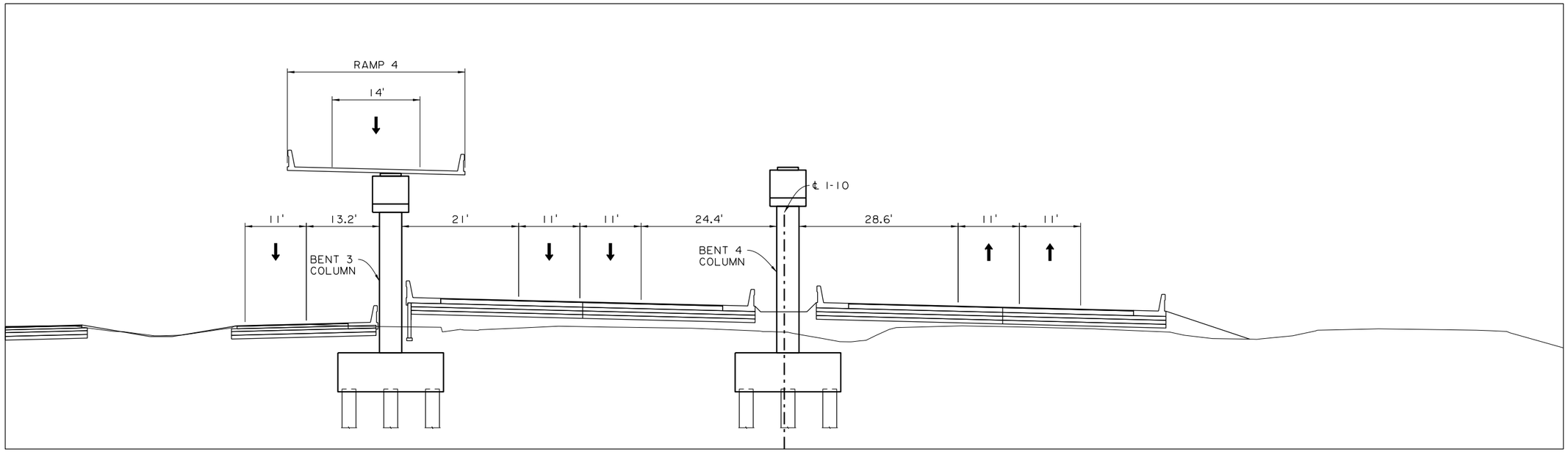

2398+00.00
STAGE 8

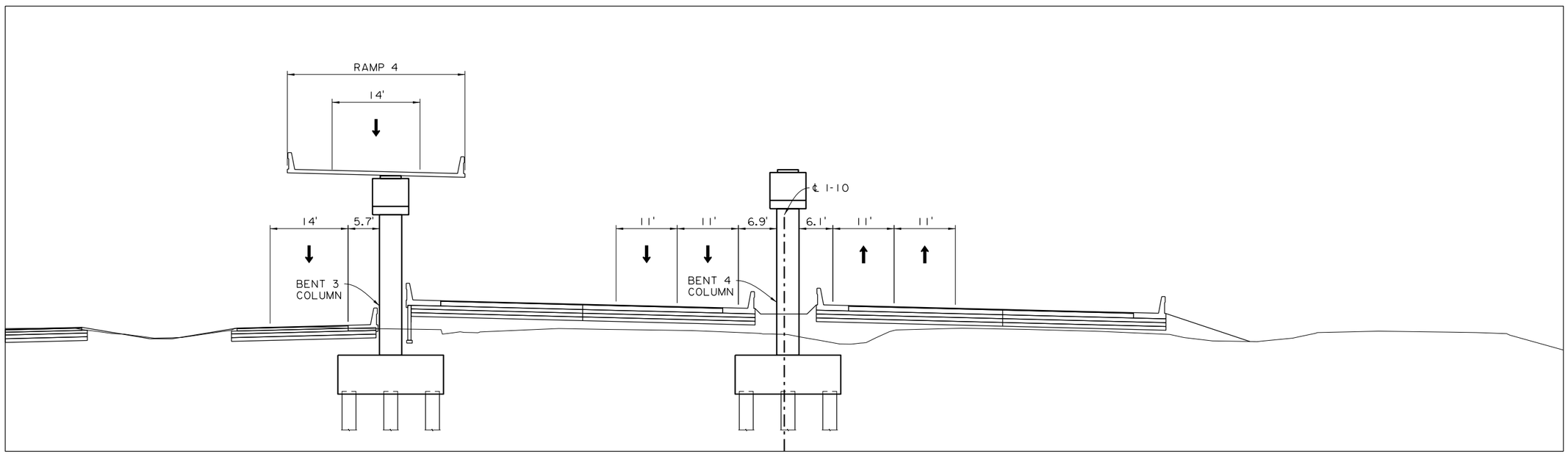

2398+00.00
STAGE 7

SHEET NUMBER	25

PARISH	CONTROL SECTION	STATE PROJECT
CALCASIEU	450-91	H.003931

DESIGN	M. HELMINGER
CHECK	N. HELMINGER
DETAIL	T. DUPUY
CHECK	M. HELMINGER
REVIEW	T. GATTLE
SERIES = 4 OF 5	

TECHNICAL PROPOSAL PLANS

PRELIMINARY
NOT FOR CONSTRUCTION
ENGINEER: GLENN McCALL
LICENSE #: 29639
DATE: 05/10/2023

NO.	DATE	REVISION OR CHANGE ORDER DESCRIPTION	BY

MAINTENANCE OF TRAFFIC TYPICAL SECTIONS STATION 2398+00

I-10 CALCASIEU RIVER BRIDGE P3

DOTD LOUISIANA DEPARTMENT OF TRANSPORTATION & DEVELOPMENT

CBP CALCASIEU BRIDGE PARTNERS

TECHNICAL PROPOSAL PLANS

S:\xdrive\HUVAL Projects\7262 (I-10 Calcasieu P3)\05 Drawings\Roadway\Border to Print\X5_MOT_Sections_Station 2398+00.dgn 05/10/2023 08:21:21 AM

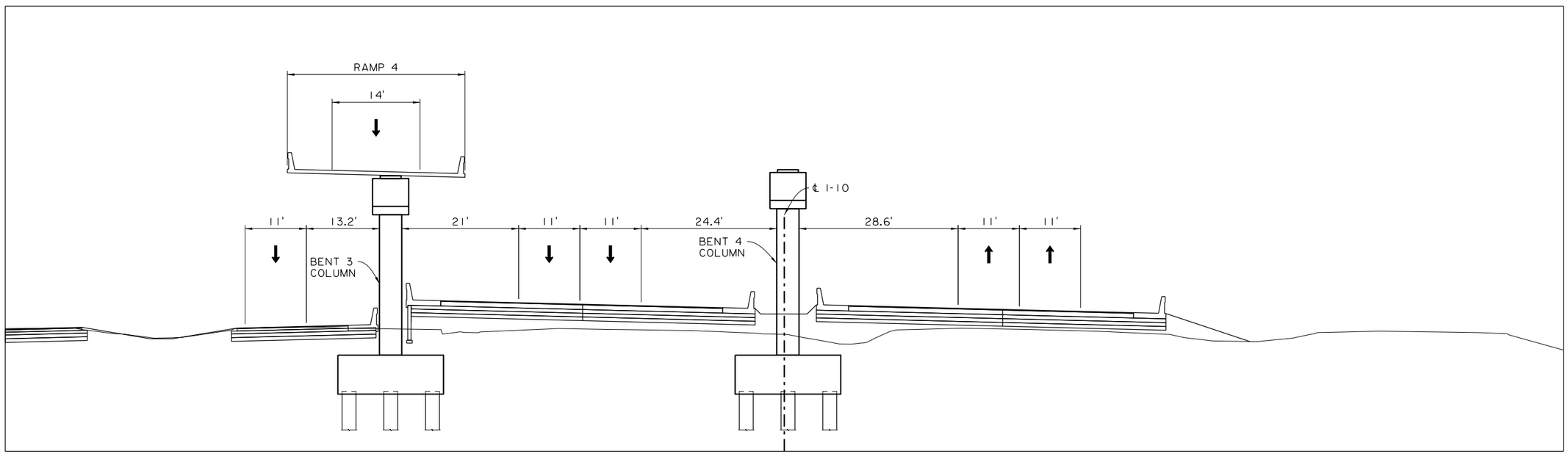

2398+00.00
STAGE 9

SHEET NUMBER	26
PARISH	CALCASIEU
CONTROL SECTION	450-91
STATE PROJECT	H.003931

DESIGN	M. HELMINGER
CHECK	N. HELMINGER
DETAIL	T. DUPUY
CHECK	M. HELMINGER
REVIEW	T. GATTLE
SERIES = 5 OF 5	

TECHNICAL PROPOSAL PLANS

PRELIMINARY
NOT FOR CONSTRUCTION

ENGINEER:
GLENN McCALL

LICENSE #:
29639

DATE:
05/10/2023

NO.	DATE	REVISION OR CHANGE ORDER DESCRIPTION	BY

MAINTENANCE OF TRAFFIC TYPICAL SECTIONS STATION 2398+00

I-10 CALCASIEU RIVER BRIDGE P3

LOUISIANA DEPARTMENT OF TRANSPORTATION & DEVELOPMENT

CALCASIEU BRIDGE PARTNERS

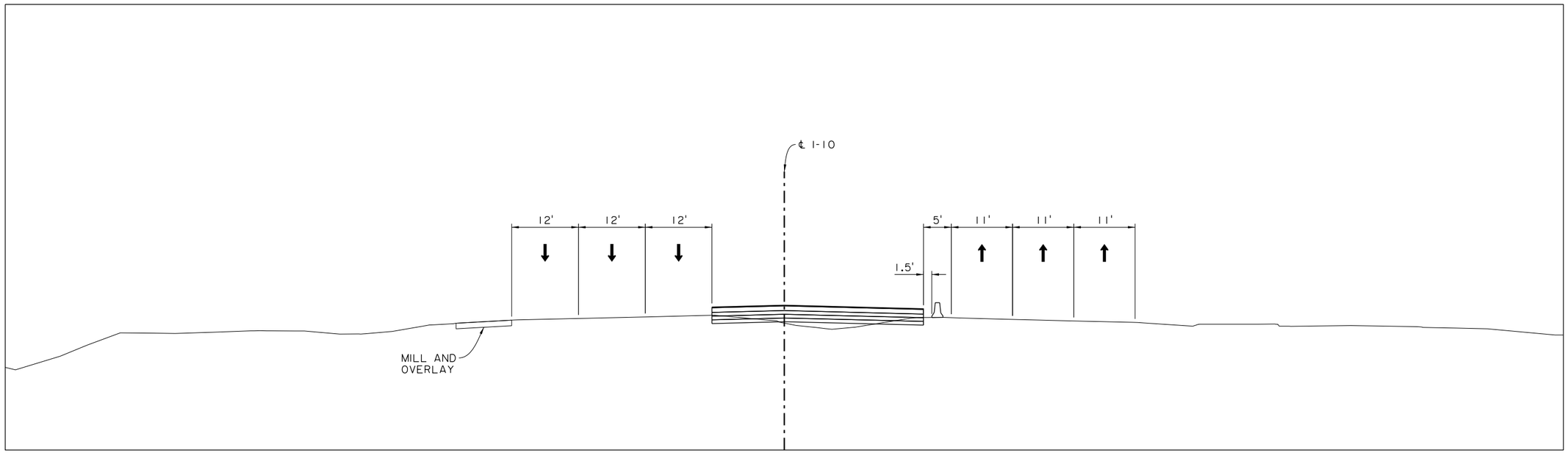

2425+00.00
STAGE 2

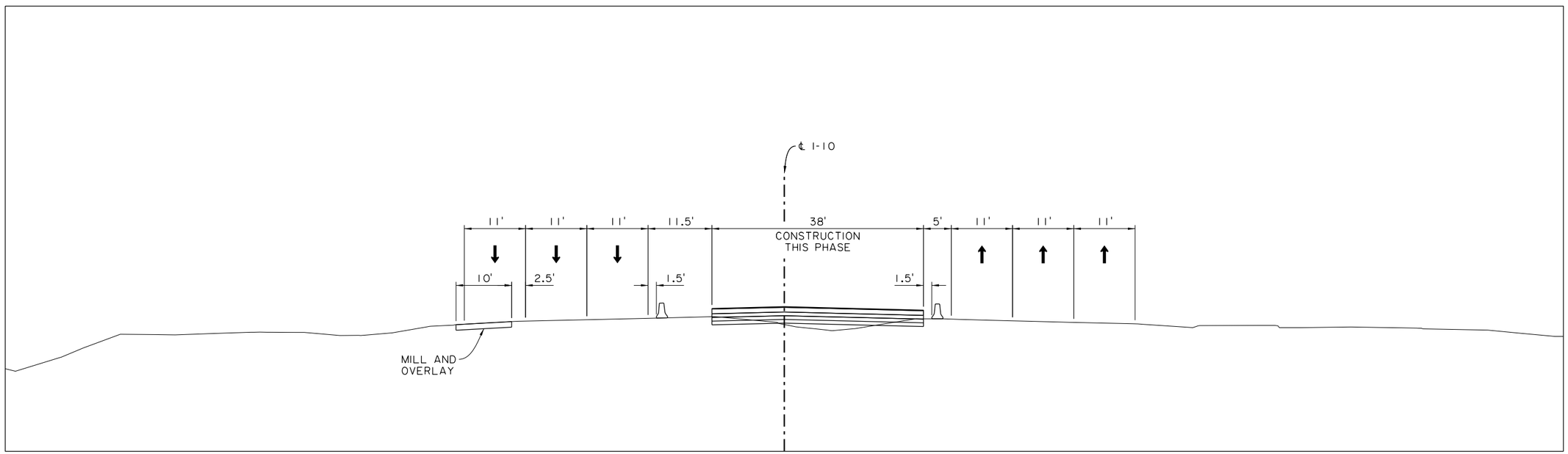

2425+00.00
STAGE 1

TECHNICAL PROPOSAL PLANS

S:\xdrive\HUVAL Projects\7262 (I-10 Calcasieu P3)\05 Drawings\Roadway\Border to Print\X6_MOT_Sections_Station 2425+00.dgn 05/10/2023 08:21:21 AM

SHEET NUMBER	27
PARISH	CALCASIEU
CONTROL SECTION	450-91
STATE PROJECT	H.003931
DESIGN	M. HELMINGER
CHECK	N. HELMINGER
DETAIL	T. DUPUY
CHECK	M. HELMINGER
REVIEW	T. GATTLE
SERIES =	1 OF 5

TECHNICAL PROPOSAL PLANS
PRELIMINARY
NOT FOR CONSTRUCTION
ENGINEER: GLENN McCALL
LICENSE #: 29639
DATE: 05/10/2023

NO.	DATE	REVISION OR CHANGE ORDER DESCRIPTION	BY

MAINTENANCE OF TRAFFIC TYPICAL SECTIONS STATION 2425+00

I-10 CALCASIEU RIVER BRIDGE P3

DOTD LOUISIANA DEPARTMENT OF TRANSPORTATION & DEVELOPMENT

CBP CALCASIEU BRIDGE PARTNERS

TECHNICAL PROPOSAL PLANS
S:\xdrive\HUVAL Projects\7262 (I-10 Calcasieu P3)\05 Drawings\Roadway\Border to Print\X6_MOT_Sections_Station 2425+00.dgn
05/10/2023 08:21:22 AM

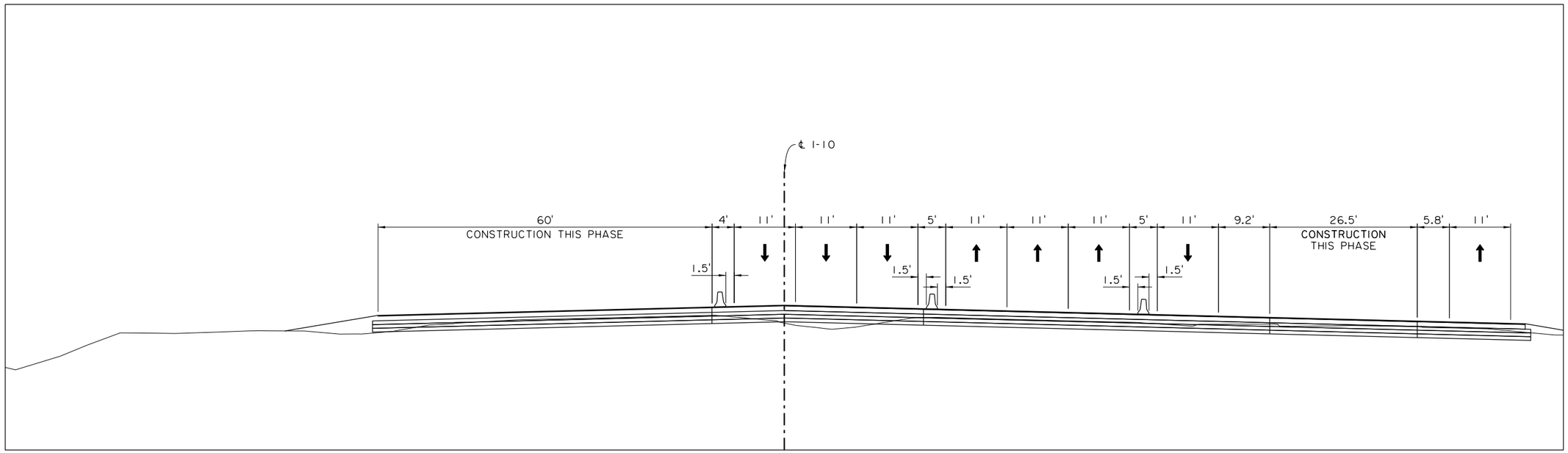

2425+00.00
STAGE 4

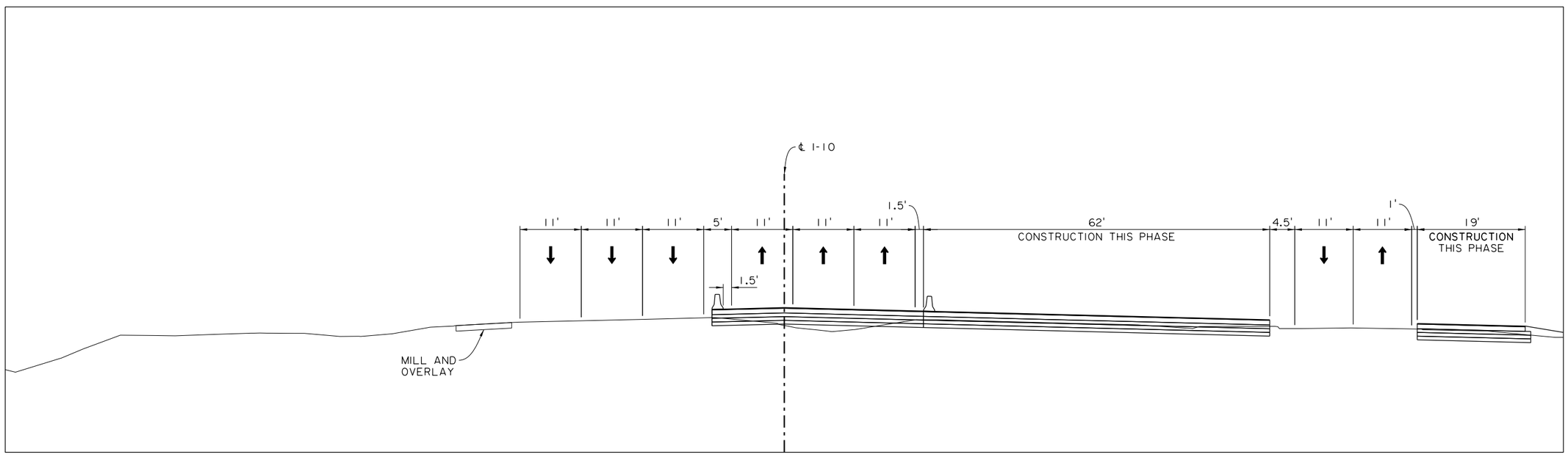

2425+00.00
STAGE 3

SHEET NUMBER	28
PARISH	CALCASIEU
CONTROL SECTION	450-91
STATE PROJECT	H.003931
DESIGN	M. HELMINGER
CHECK	N. HELMINGER
DETAIL	T. DUPUY
CHECK	M. HELMINGER
REVIEW	T. GATTLE
SERIES = 2 OF 5	

TECHNICAL PROPOSAL PLANS

PRELIMINARY
NOT FOR CONSTRUCTION

ENGINEER:
GLENN McCALL

LICENSE #:
29639

DATE:
05/10/2023

NO.	DATE	REVISION OR CHANGE ORDER DESCRIPTION	BY

MAINTENANCE OF TRAFFIC
TYPICAL SECTIONS
STATION 2425+00

I-10 CALCASIEU RIVER BRIDGE P3

DOTD LOUISIANA DEPARTMENT OF TRANSPORTATION & DEVELOPMENT

CBP CALCASIEU BRIDGE PARTNERS

TECHNICAL PROPOSAL PLANS
S:\xdrive\HUVAL Projects\7262 (I-10 Calcasieu P3)\05 Drawings\Roadway\Border to Print\X6_MOT_Sections_Station 2425+00.dgn
05/10/2023 08:21:22 AM

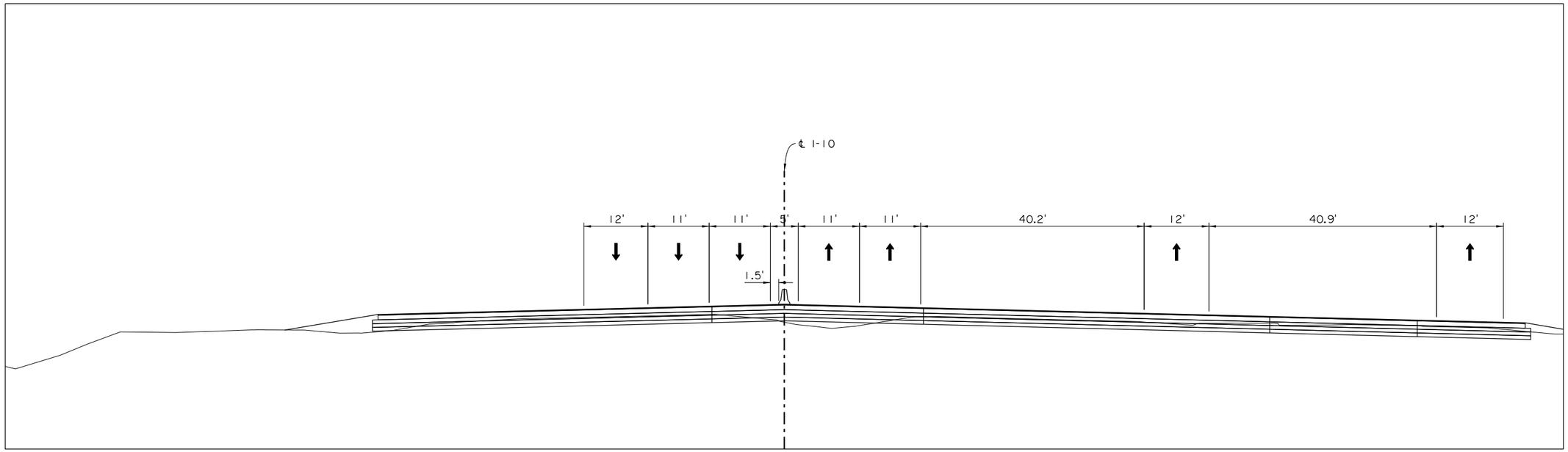

2425+00.00
STAGE 6

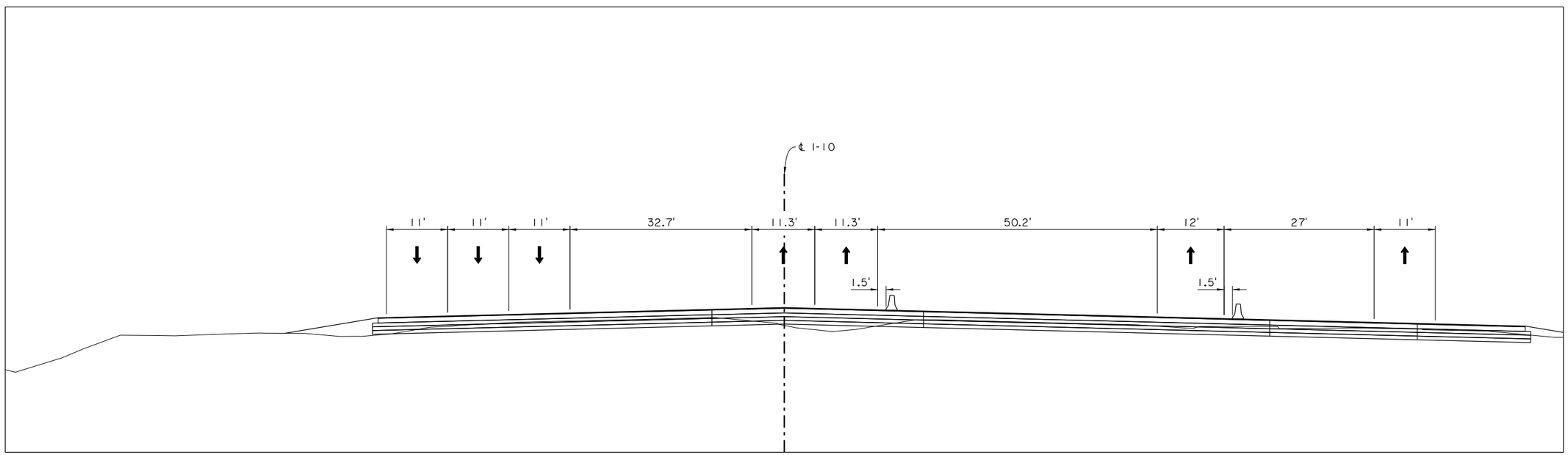

2425+00.00
STAGE 5

SHEET NUMBER	29

PARISH	CONTROL SECTION	STATE PROJECT
CALCASIEU	450-91	H.003931

DESIGN	M. HELMINGER
CHECK	N. HELMINGER
DETAIL	T. DUPUY
CHECK	M. HELMINGER
REVIEW	T. GATTLE
SERIES	3 OF 5

TECHNICAL PROPOSAL PLANS

PRELIMINARY
NOT FOR CONSTRUCTION

ENGINEER:
GLENN McCALL

LICENSE #:
29639

DATE:
05/10/2023

NO.	DATE	REVISION OR CHANGE ORDER DESCRIPTION	BY

MAINTENANCE OF TRAFFIC
TYPICAL SECTIONS
STATION 2425+00

I-10 CALCASIEU RIVER BRIDGE P3

DOTD LOUISIANA DEPARTMENT OF TRANSPORTATION & DEVELOPMENT

CBP CALCASIEU BRIDGE PARTNERS

TECHNICAL PROPOSAL PLANS
S:\xdrive\HUVAL Projects\7262 (I-10 Calcasieu P3)\05 Drawings\Roadway\Border to Print\X6_MOT_Sections_Station 2425+00.dgn
05/10/2023 08:21:22 AM

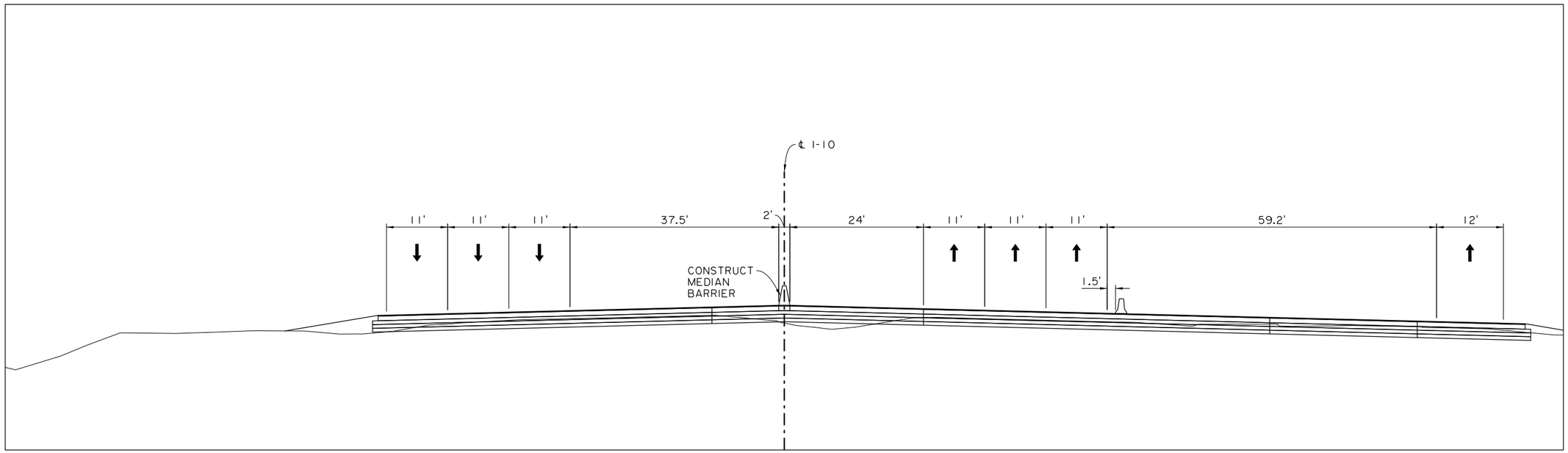

2425+00.00
STAGE 8

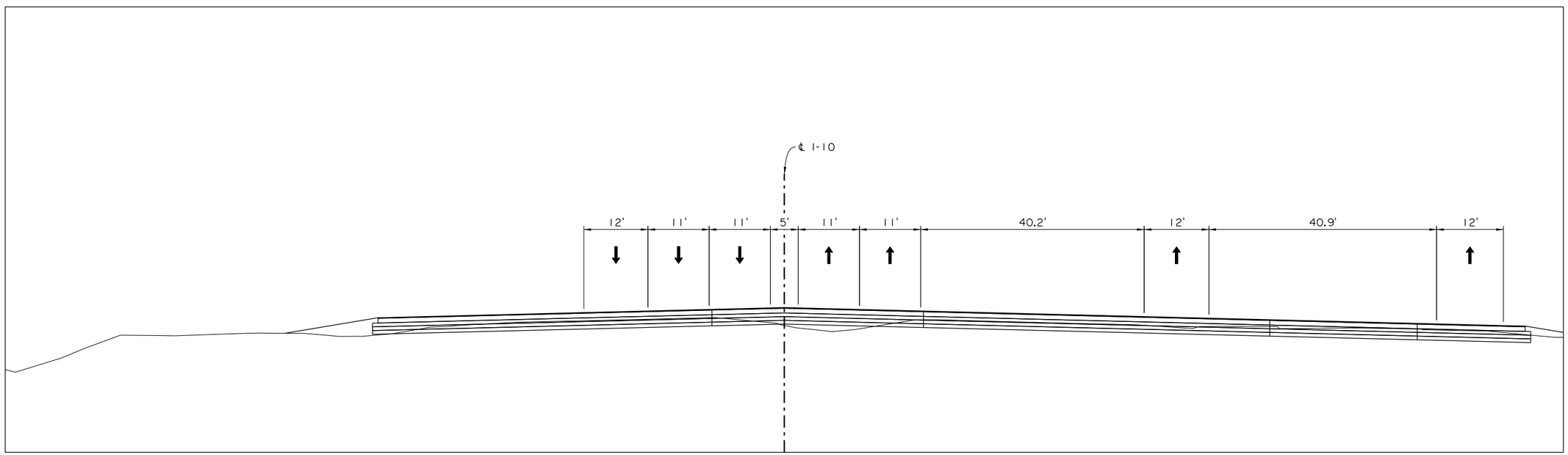

2425+00.00
STAGE 7

SHEET NUMBER	30

PARISH	CONTROL SECTION	STATE PROJECT
CALCASIEU	450-91	H.003931

DESIGN	M. HELMINGER
CHECK	N. HELMINGER
DETAIL	T. DUPUY
CHECK	M. HELMINGER
REVIEW	T. GATTLE
SERIES =	4 OF 5

TECHNICAL PROPOSAL PLANS

PRELIMINARY
NOT FOR CONSTRUCTION

ENGINEER:
GLENN McCALL

LICENSE #:
29639

DATE:
05/10/2023

NO.	DATE	REVISION OR CHANGE ORDER DESCRIPTION	BY

MAINTENANCE OF TRAFFIC
TYPICAL SECTIONS
STATION 2425+00

I-10 CALCASIEU RIVER BRIDGE P3

DOTD LOUISIANA DEPARTMENT OF TRANSPORTATION & DEVELOPMENT

CBP CALCASIEU BRIDGE PARTNERS

TECHNICAL PROPOSAL PLANS

S:\xdrive\HUVAL Projects\7262 (I-10 Calcasieu P3)\05 Drawings\Roadway\Border to Print\X6_MOT_Sections_Station 2425+00.dgn 05/10/2023 08:21:22 AM

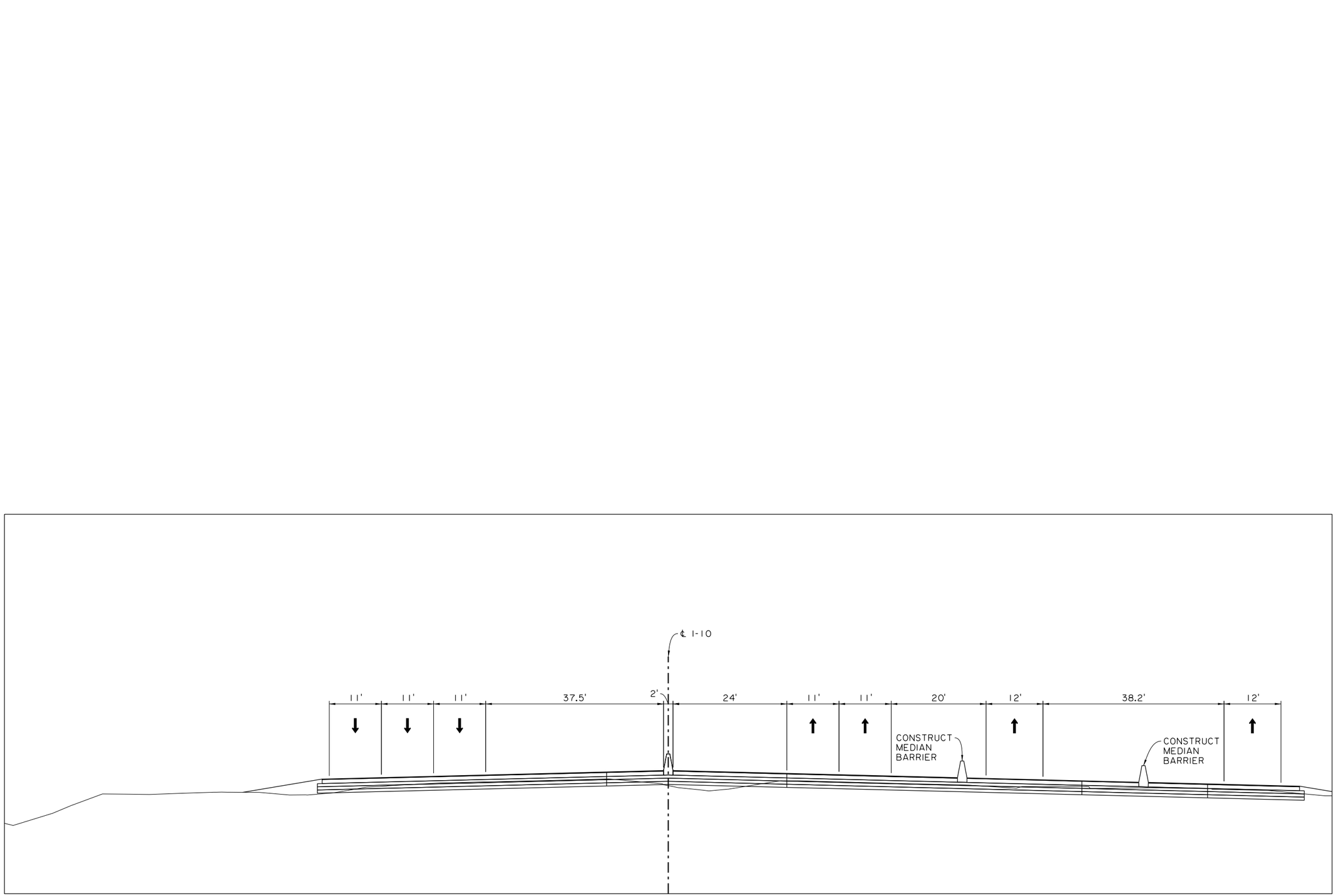

2425+00.00
STAGE 9

SHEET NUMBER	31
PARISH	CALCASIEU
CONTROL SECTION	450-91
STATE PROJECT	H.003931

DESIGN	M. HELMINGER	DETAIL	T. DUPUY
CHECK	N. HELMINGER	CHECK	M. HELMINGER
REVIEW	T. GATTLE	SERIES = 5 OF 5	

TECHNICAL PROPOSAL PLANS

PRELIMINARY
NOT FOR CONSTRUCTION

ENGINEER:
GLENN McCALL

LICENSE #:
29639

DATE:
05/10/2023

NO.	DATE	REVISION OR CHANGE ORDER DESCRIPTION	BY

MAINTENANCE OF TRAFFIC
TYPICAL SECTIONS
STATION 2425+00

I-10 CALCASIEU RIVER BRIDGE P3

DOTD LOUISIANA DEPARTMENT OF TRANSPORTATION & DEVELOPMENT

CBP CALCASIEU BRIDGE PARTNERS

TECHNICAL PROPOSAL PLANS
S:\xdrive\HUVAL Projects\7262 (I-10 Calcasieu P3)\05 Drawings\Roadway\Border to Print\V7_MOT_Sections_Station 2540+00.dgn
05/10/2023 08:21:23 AM

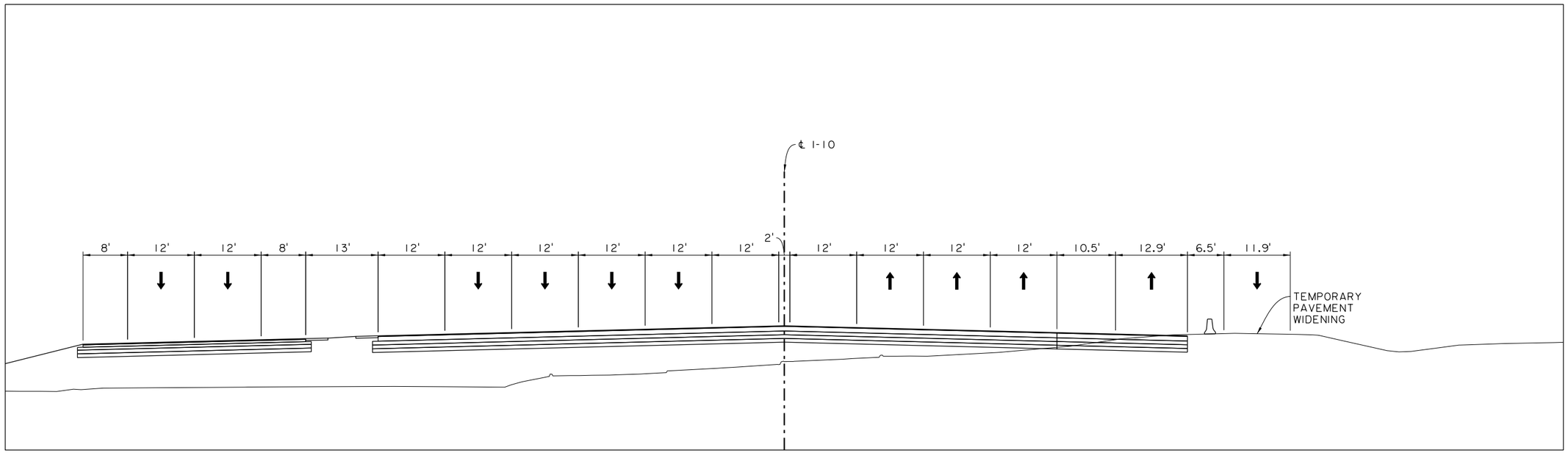

2540+00.00
STAGE 2

SHEET NUMBER	32

PARISH	CONTROL SECTION	STATE PROJECT
CALCASIEU	450-91	H.003931

DESIGN	M. HELMINGER
CHECK	N. HELMINGER
DETAIL	T. DUPUY
CHECK	M. HELMINGER
REVIEW	T. GATTLE
SERIES =	1 OF 5

TECHNICAL PROPOSAL PLANS
PRELIMINARY
NOT FOR CONSTRUCTION
ENGINEER:
GLENN McCALL
LICENSE #:
29639
DATE:
05/10/2023

NO.	DATE	REVISION OR CHANGE ORDER DESCRIPTION	BY

MAINTENANCE OF TRAFFIC
TYPICAL SECTIONS
STATION 2540+00

I-10 CALCASIEU RIVER BRIDGE P3

DOTD LOUISIANA DEPARTMENT OF TRANSPORTATION & DEVELOPMENT

CBP CALCASIEU BRIDGE PARTNERS

TECHNICAL PROPOSAL PLANS
S:\xdrive\HUVAL Projects\7262 (I-10 Calcasieu P3)\05 Drawings\Roadway\Border to Print\X7_MOT_Sections_Station 2540+00.dgn
05/10/2023 08:21:23 AM

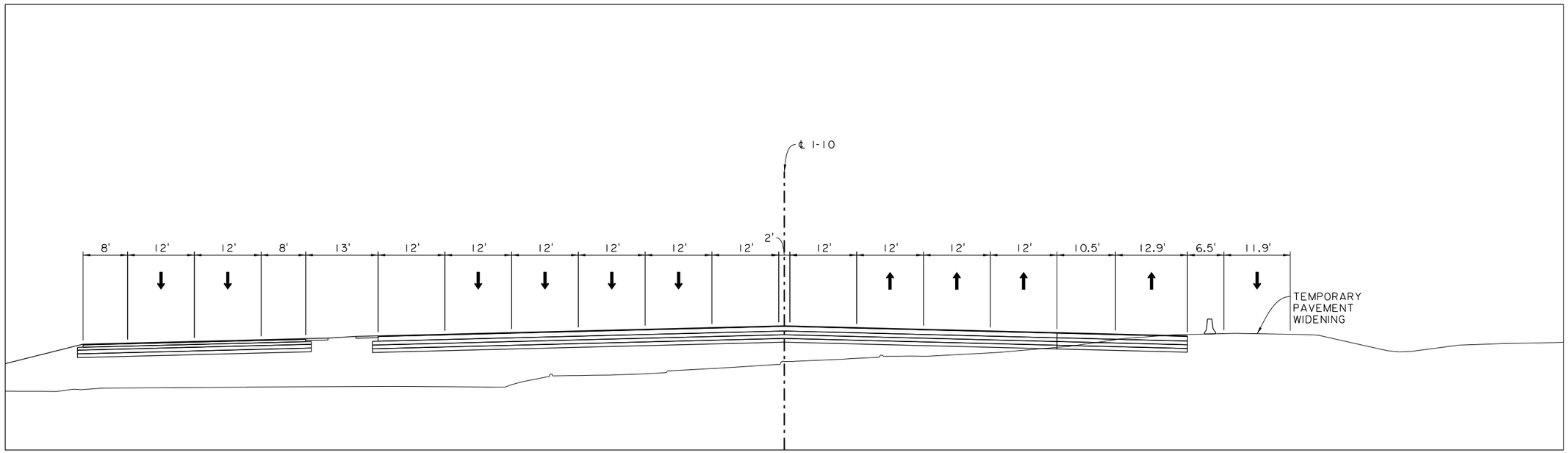

2540+00.00
STAGE 4

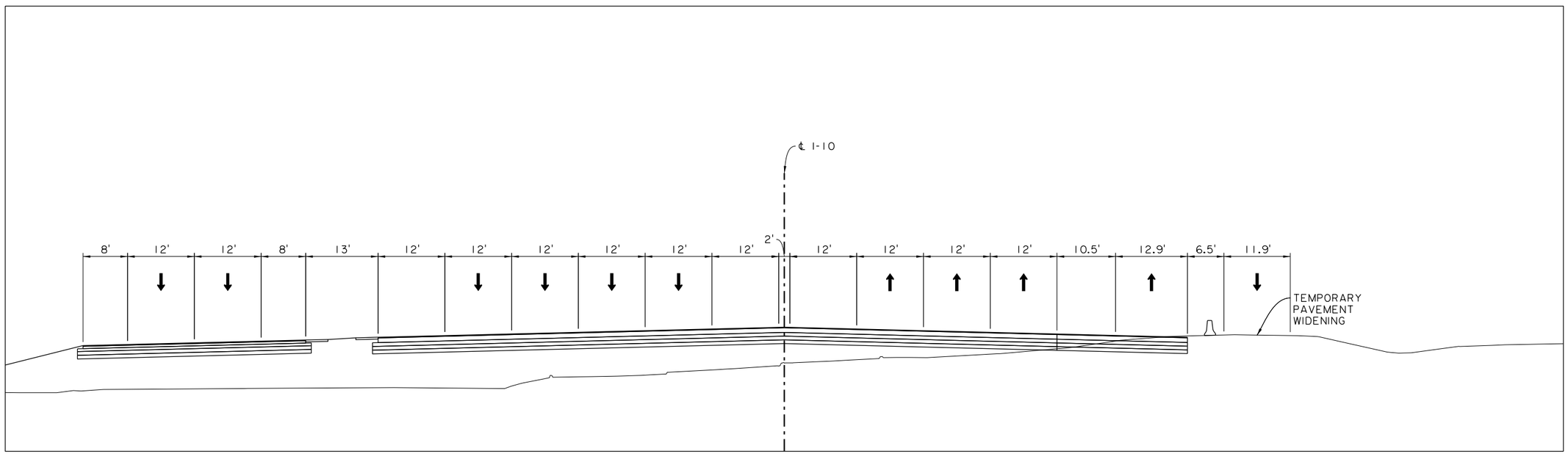

2540+00.00
STAGE 3

SHEET NUMBER 33

PARISH	CONTROL SECTION	STATE PROJECT
CALCASIEU	450-91	H.003931

DESIGN	M. HELMINGER	DETAIL	T. DUPUY	REVIEW	T. GATTLE
CHECK	N. HELMINGER	CHECK	M. HELMINGER	SERIES = 2 OF 5	

TECHNICAL PROPOSAL PLANS
PRELIMINARY
NOT FOR CONSTRUCTION
ENGINEER: GLENN McCALL
LICENSE #: 29639
DATE: 05/10/2023

NO.	DATE	REVISION OR CHANGE ORDER DESCRIPTION	BY

MAINTENANCE OF TRAFFIC TYPICAL SECTIONS STATION 2540+00

I-10 CALCASIEU RIVER BRIDGE P3

DOTD LOUISIANA DEPARTMENT OF TRANSPORTATION & DEVELOPMENT

CBP CALCASIEU BRIDGE PARTNERS

TECHNICAL PROPOSAL PLANS
S:\xdrive\HUVAL Projects\7262 (I-10 Calcasieu P3)\05 Drawings\Roadway\Border to Print\X7_MOT_Sections_Station 2540+00.dgn
05/10/2023 08:21:23 AM

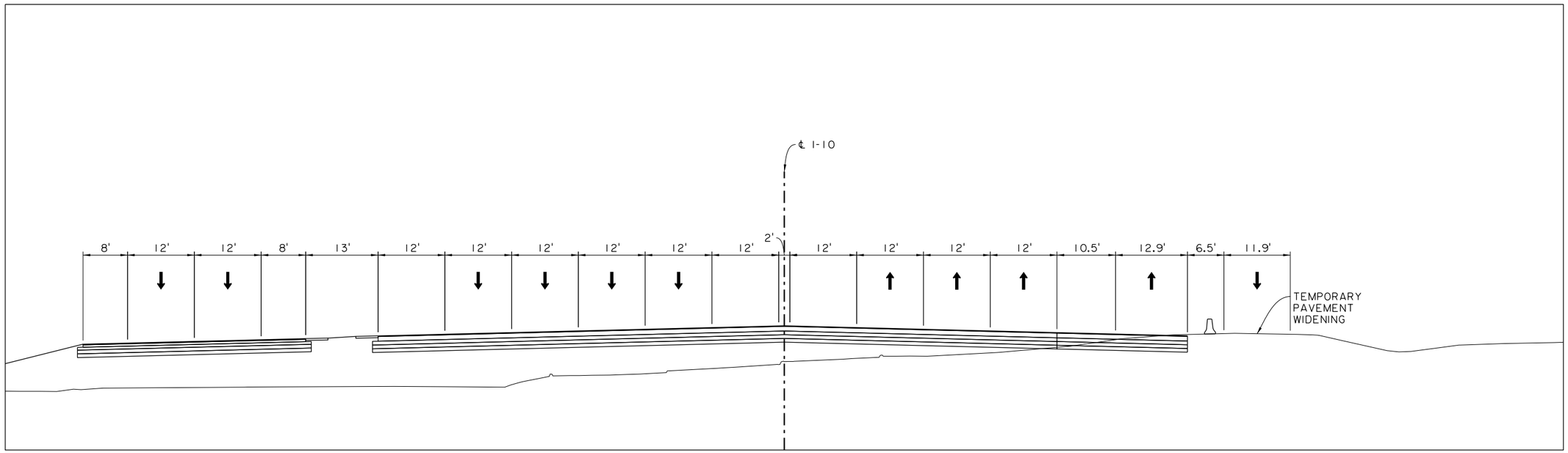

2540+00.00
STAGE 6

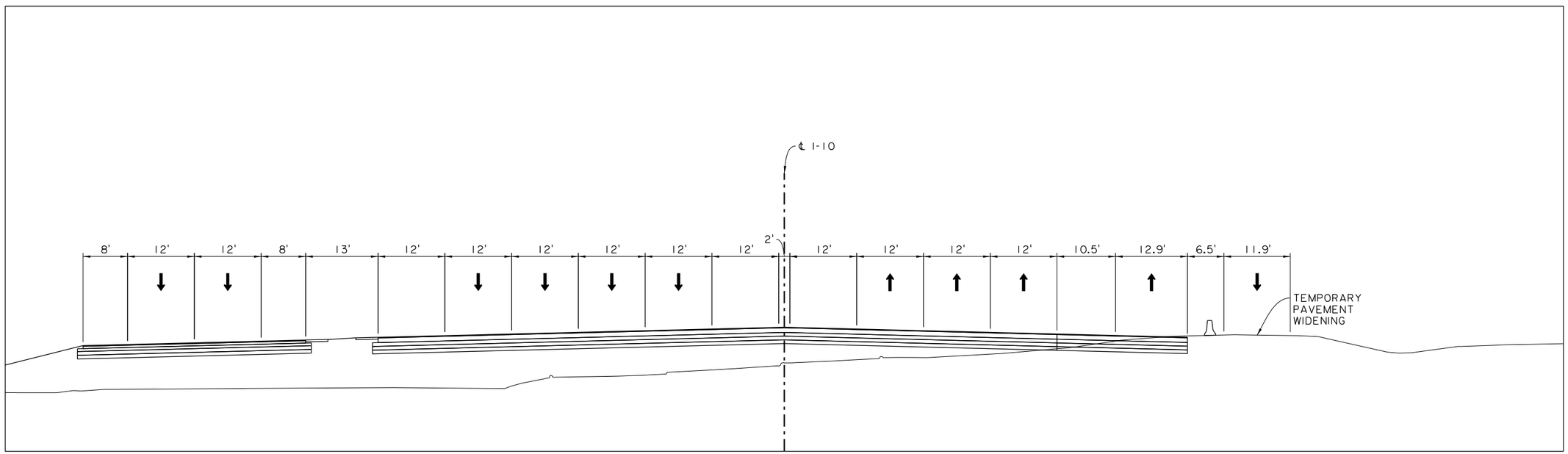

2540+00.00
STAGE 5

SHEET NUMBER 34

PARISH	CONTROL SECTION	STATE PROJECT
CALCASIEU	450-91	H.003931

DESIGN	M. HELMINGER	T. DUPUY	REVIEW	T. GATTLE
CHECK	N. HELMINGER	DETAIL CHECK	M. HELMINGER	SERIES = 3 OF 5

TECHNICAL PROPOSAL PLANS
PRELIMINARY
NOT FOR CONSTRUCTION
ENGINEER: GLENN McCALL
LICENSE #: 29639
DATE: 05/10/2023

NO.	DATE	REVISION OR CHANGE ORDER DESCRIPTION	BY

MAINTENANCE OF TRAFFIC TYPICAL SECTIONS STATION 2540+00

I-10 CALCASIEU RIVER BRIDGE P3

DOTD LOUISIANA DEPARTMENT OF TRANSPORTATION & DEVELOPMENT

CBP CALCASIEU BRIDGE PARTNERS

TECHNICAL PROPOSAL PLANS
S:\xdrive\HUVAL Projects\7262 (I-10 Calcasieu P3)\05 Drawings\Roadway\Border to Print\X7_MOT_Sections_Station 2540+00.dgn
05/10/2023 08:21:23 AM

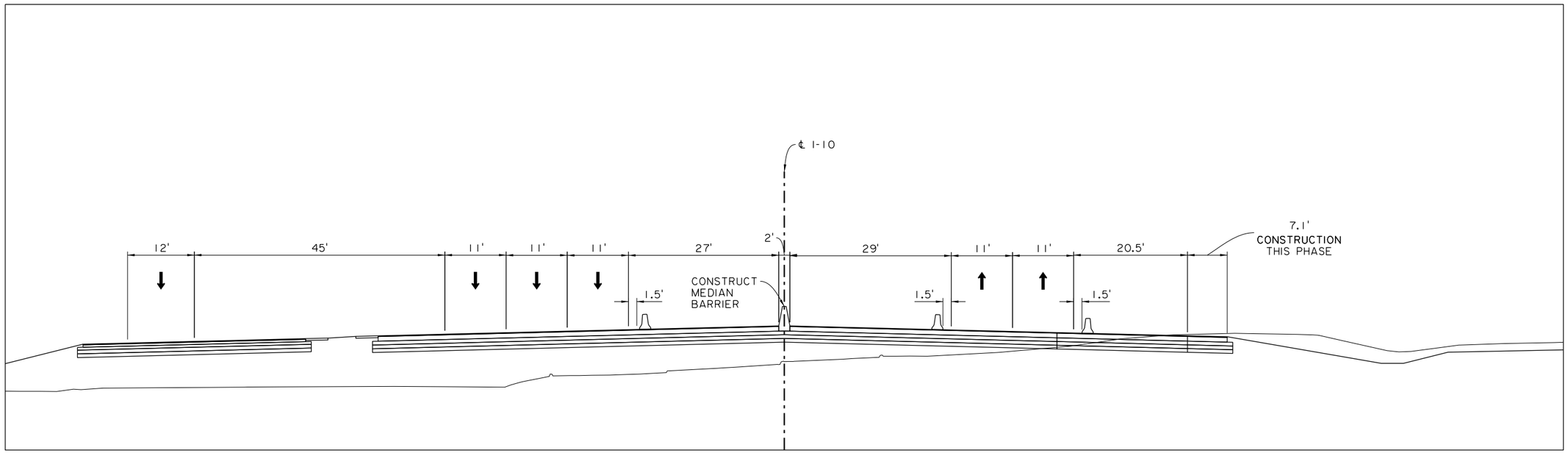

2540+00.00
STAGE 8

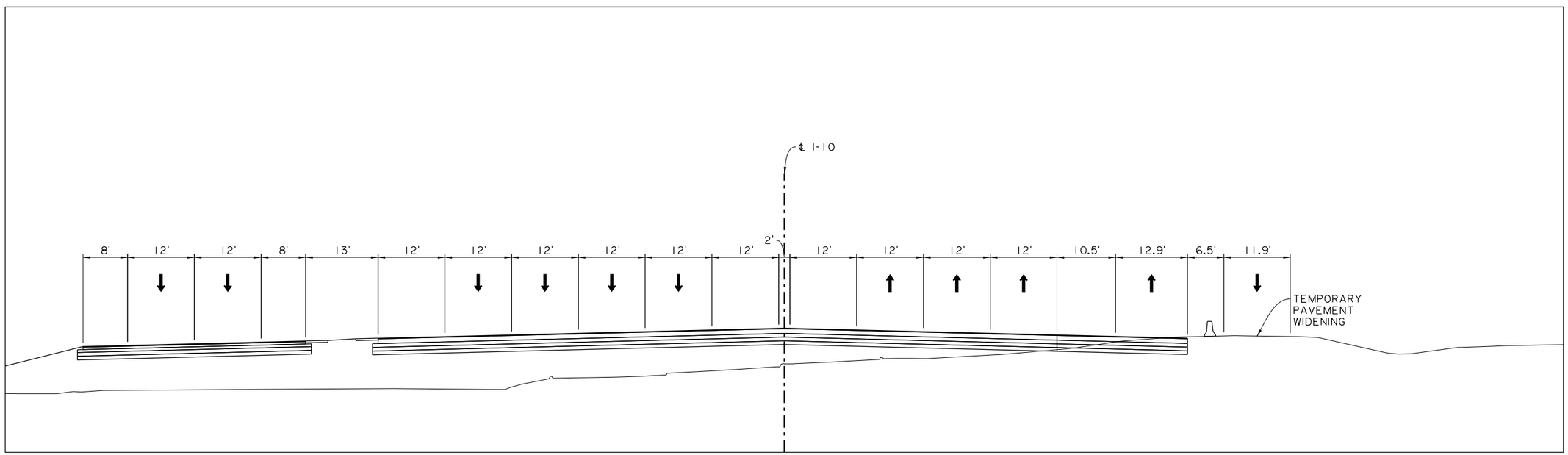

2540+00.00
STAGE 7

SHEET NUMBER	35

PARISH	CONTROL SECTION	STATE PROJECT
CALCASIEU	450-91	H.003931

DESIGN	M. HELMINGER
CHECK	N. HELMINGER
DETAIL	T. DUPUY
CHECK	M. HELMINGER
REVIEW	T. GATTLE
SERIES = 4 OF 5	

TECHNICAL PROPOSAL PLANS

PRELIMINARY
NOT FOR CONSTRUCTION

ENGINEER:
GLENN McCALL

LICENSE #:
29639

DATE:
05/10/2023

NO.	DATE	REVISION OR CHANGE ORDER DESCRIPTION	BY

MAINTENANCE OF TRAFFIC
TYPICAL SECTIONS
STATION 2540+00

I-10 CALCASIEU RIVER BRIDGE P3

DOTD LOUISIANA DEPARTMENT OF TRANSPORTATION & DEVELOPMENT

CBP CALCASIEU BRIDGE PARTNERS

S:\xdrive\HUVAL Projects\7262 (I-10 Calcasieu P3)\05 Drawings\Roadway\Border to Print\X7_MOT_Sections_Station 2540+00.dgn 05/10/2023 08:21:23 AM

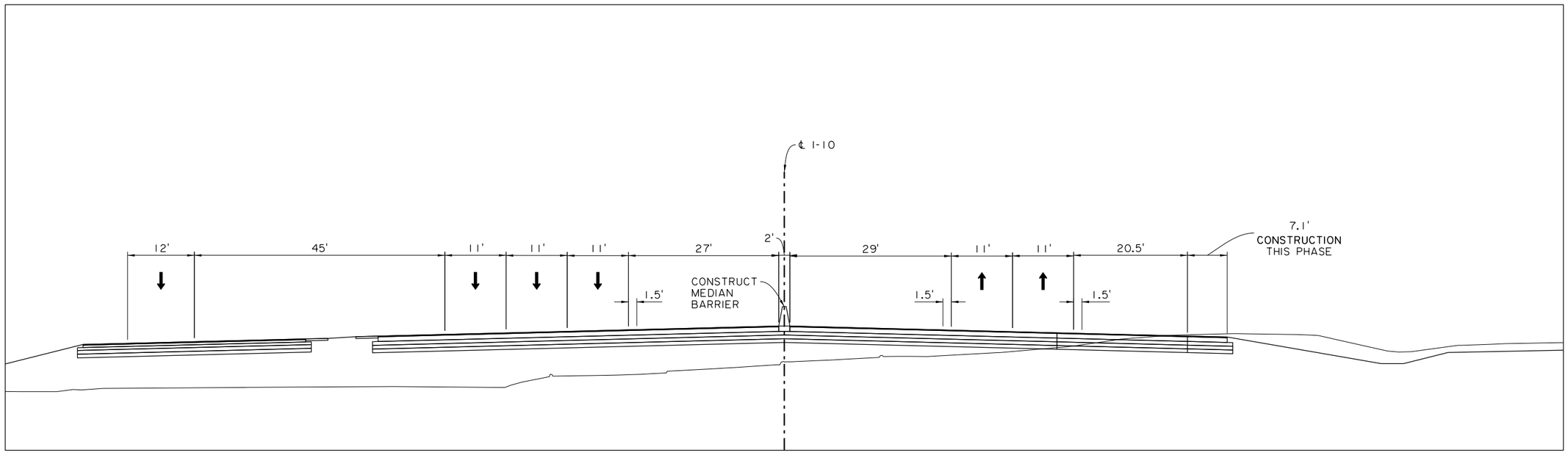

2540+00.00
STAGE 9

SHEET NUMBER 36

PARISH: CALCASIEU
CONTROL SECTION: 450-91
STATE PROJECT: H.003931

DESIGN: M. HELMINGER
CHECK: N. HELMINGER
DETAIL: T. DUPUY
CHECK: M. HELMINGER
REVIEW: T. GATTLE
SERIES #: 5 OF 5

TECHNICAL PROPOSAL PLANS
PRELIMINARY
NOT FOR CONSTRUCTION
ENGINEER: GLENN McCALL
LICENSE #: 29639
DATE: 05/10/2023

NO.	DATE	REVISION OR CHANGE ORDER DESCRIPTION	BY

MAINTENANCE OF TRAFFIC
TYPICAL SECTIONS
STATION 2540+00

I-10 CALCASIEU RIVER BRIDGE P3

DOTD
LOUISIANA DEPARTMENT OF TRANSPORTATION & DEVELOPMENT

CBP
CALCASIEU BRIDGE PARTNERS

TECHNICAL PROPOSAL PLANS
S:\xdrive\HUVAL Projects\7262 (I-10 Calcasieu P3)\05 Drawings\Roadway\Border to Print\XX_MOT_Phase 1.dgn
5/25/2023 2:25:49 PM

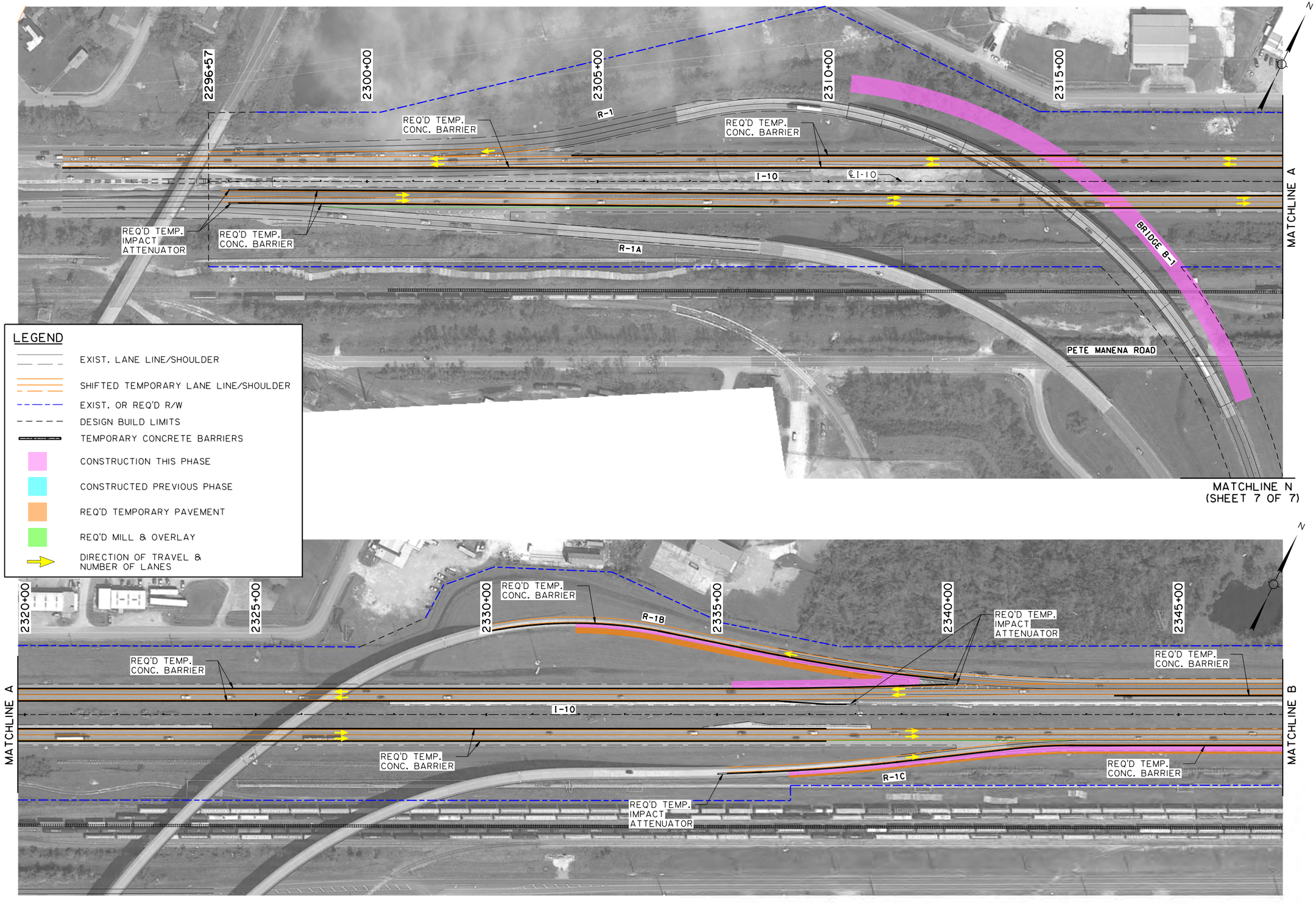

SHEET NUMBER 37

PARISH	CONTROL SECTION	STATE PROJECT
CALCASIEU	450-91	H.003931

DESIGN	G. McCALL	DETAIL	M.HELMINGER	REVIEW	SERIES # 1 OF 7
CHECK	M.HELMINGER	CHECK	G. McCALL		

TECHNICAL PROPOSAL PLANS

PRELIMINARY
NOT FOR CONSTRUCTION

ENGINEER:
GLENN McCALL

LICENSE #:
29639

DATE:
5/25/2023

NO.	DATE	REVISION OR CHANGE ORDER DESCRIPTION	BY

STATE OF LOUISIANA
DEPARTMENT OF TRANSPORTATION AND DEVELOPMENT

SUGGESTED SEQUENCE OF CONSTRUCTION

PHASE I

I-10 CALCASIEU RIVER BRIDGE P3

DOTD
LOUISIANA DEPARTMENT OF TRANSPORTATION & DEVELOPMENT

CBP

TECHNICAL PROPOSAL PLANS
S:\xdrive\HUVAL Projects\7262 (I-10 Calcasieu P3)\05 Drawings\Roadway\Border to Print\XX_MOT_Phase 1.dgn
5/25/2023 2:25:55 PM

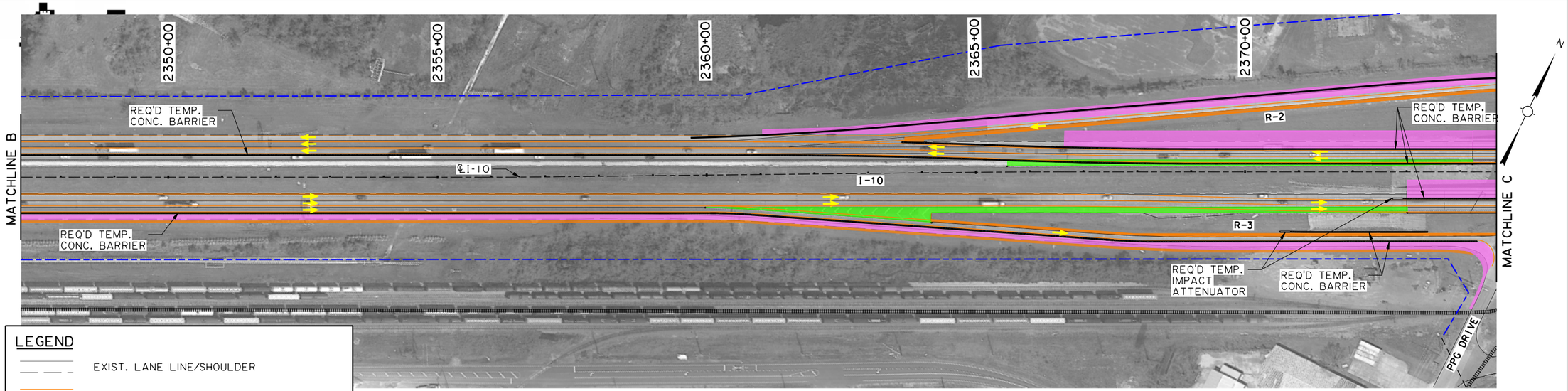

LEGEND

- EXIST. LANE LINE/SHOULDER
- SHIFTED TEMPORARY LANE LINE/SHOULDER
- EXIST. OR REQ'D R/W
- DESIGN BUILD LIMITS
- TEMPORARY CONCRETE BARRIERS
- CONSTRUCTION THIS PHASE
- CONSTRUCTED PREVIOUS PHASE
- REQ'D TEMPORARY PAVEMENT
- REQ'D MILL & OVERLAY
- DIRECTION OF TRAVEL & NUMBER OF LANES

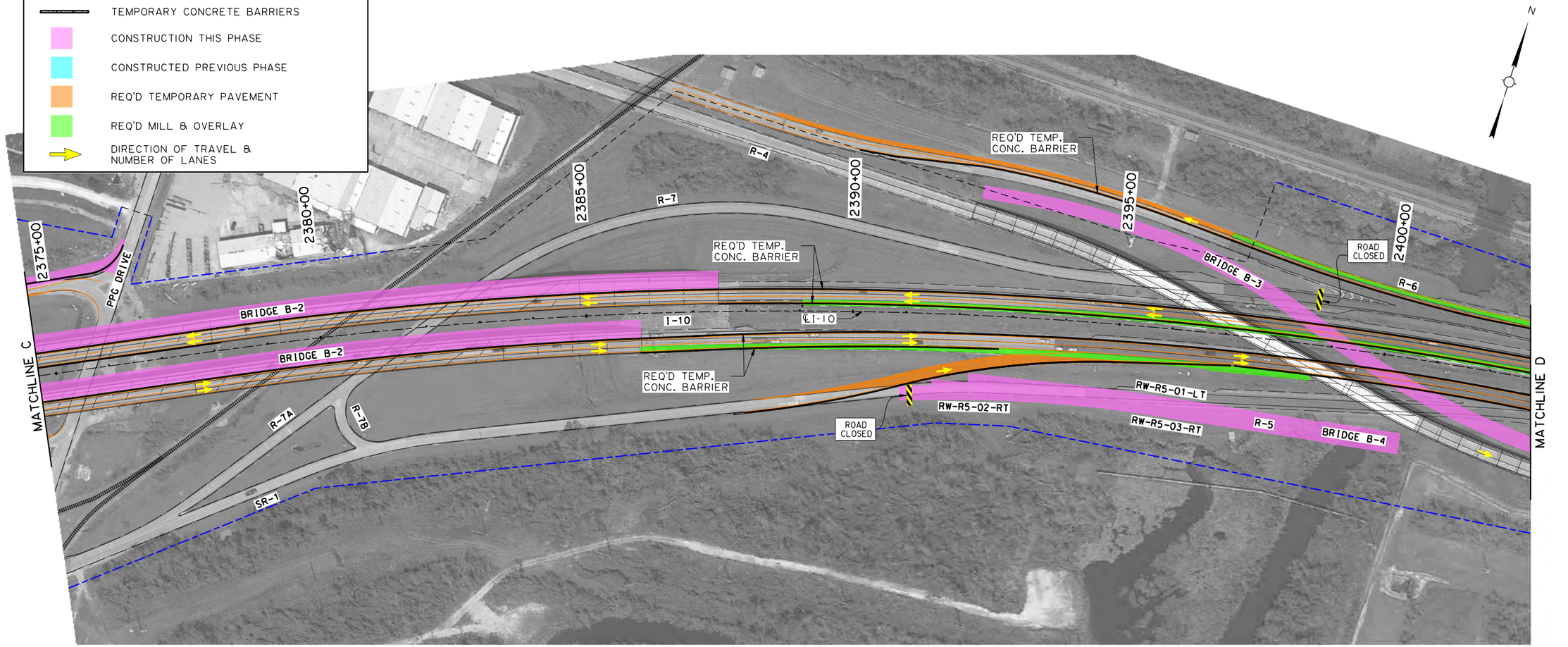

SUGGESTED SEQUENCE OF CONSTRUCTION
PHASE I

I-10 CALCASIEU RIVER BRIDGE P3

SHEET NUMBER	38

PARISH	CONTROL SECTION	STATE PROJECT
CALCASIEU	450-91	H.003931

DESIGN	G. McCALL	DETAIL	M.HELMINGER	REVIEW	SERIES # 2 OF 7
CHECK	M.HELMINGER	CHECK	G. McCALL		

TECHNICAL PROPOSAL PLANS
PRELIMINARY
NOT FOR CONSTRUCTION
ENGINEER: GLENN McCALL
LICENSE #: 29639
DATE: 5/25/2023

NO.	DATE	REVISION OR CHANGE ORDER DESCRIPTION	BY

TECHNICAL PROPOSAL PLANS
5/25/2023 2:26:01 PM
S:\xdrive\HUVAL Projects\7262 (I-10 Calcasieu P3)\05 Drawings\Roadway\Border to Print\XX_MOT_Phase 1.dgn

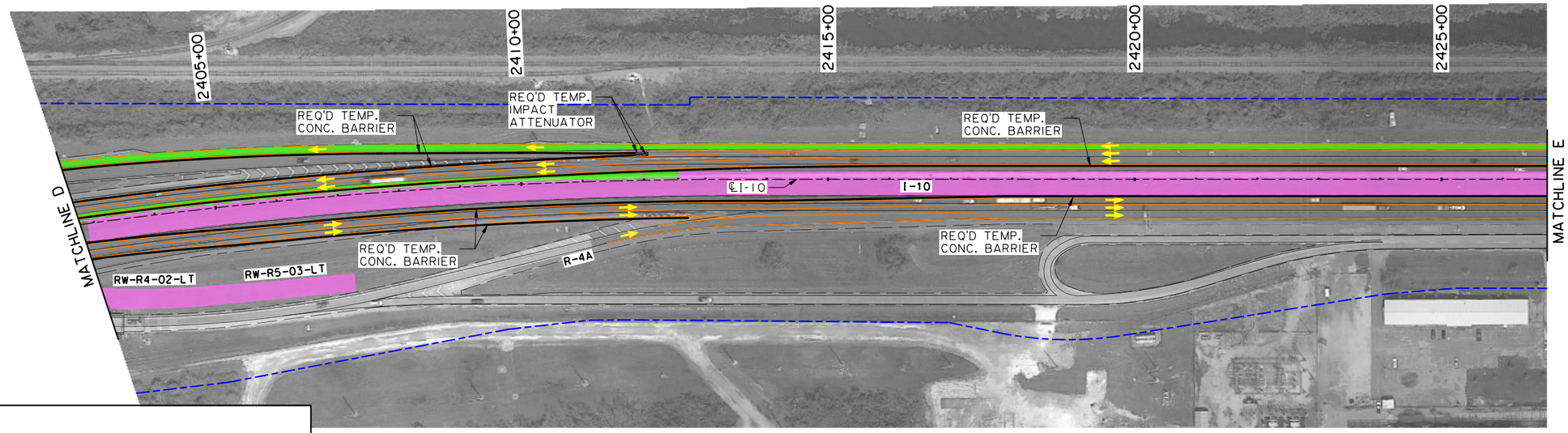

N

LEGEND

- EXIST. LANE LINE/SHOULDER
- SHIFTED TEMPORARY LANE LINE/SHOULDER
- EXIST. OR REQ'D R/W
- DESIGN BUILD LIMITS
- TEMPORARY CONCRETE BARRIERS
- CONSTRUCTION THIS PHASE
- CONSTRUCTED PREVIOUS PHASE
- REQ'D TEMPORARY PAVEMENT
- REQ'D MILL & OVERLAY
- DIRECTION OF TRAVEL & NUMBER OF LANES

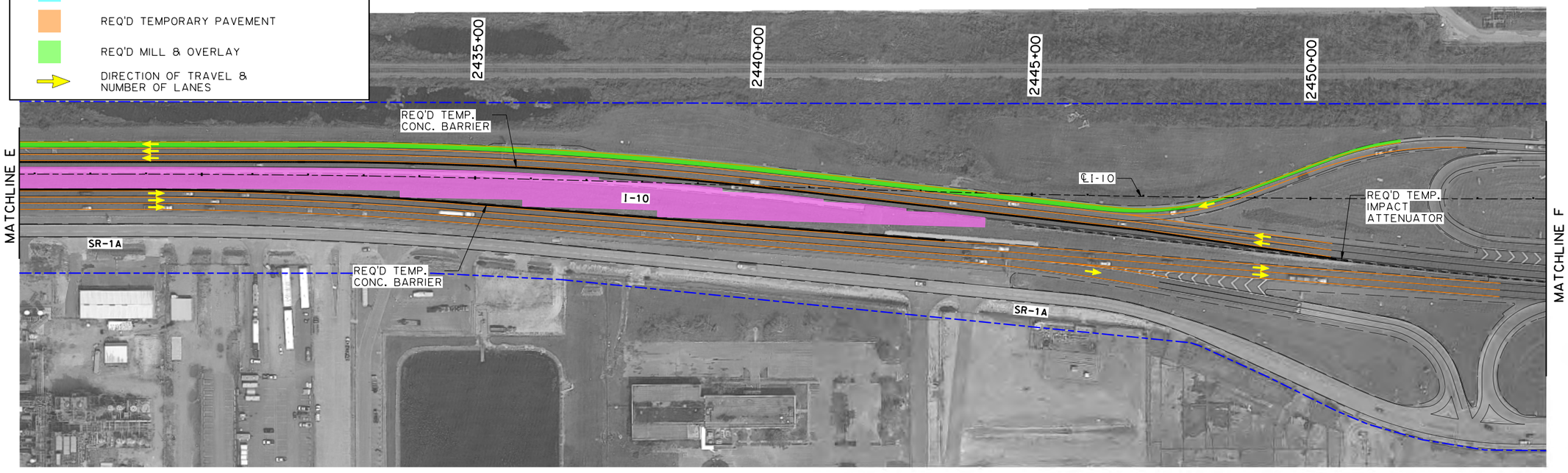

N

SHEET NUMBER	39
PARISH	CALCASIEU
CONTROL SECTION	450-91
STATE PROJECT	H.003931

DESIGN	G. McCALL	DETAIL	M.HELMINGER
CHECK	M.HELMINGER	CHECK	G. McCALL
REVIEW		SERIES	3 OF 7

TECHNICAL PROPOSAL PLANS

PRELIMINARY
NOT FOR CONSTRUCTION

ENGINEER:
GLENN McCALL

LICENSE #:
29639

DATE:
5/25/2023

NO.	DATE	REVISION OR CHANGE ORDER DESCRIPTION	BY

SUGGESTED SEQUENCE OF CONSTRUCTION

PHASE I

I-10 CALCASIEU RIVER BRIDGE P3

DOTD LOUISIANA DEPARTMENT OF TRANSPORTATION & DEVELOPMENT

CBP

TECHNICAL PROPOSAL PLANS
S:\xdrive\HUVAL Projects\7262 (I-10 Calcasieu P3)\05 Drawings\Roadway\Border to Print\XX_MOT_Phase 1.dgn 5/25/2023 2:26:05 PM

MATCHLINE M (SHEET 7 OF 7)

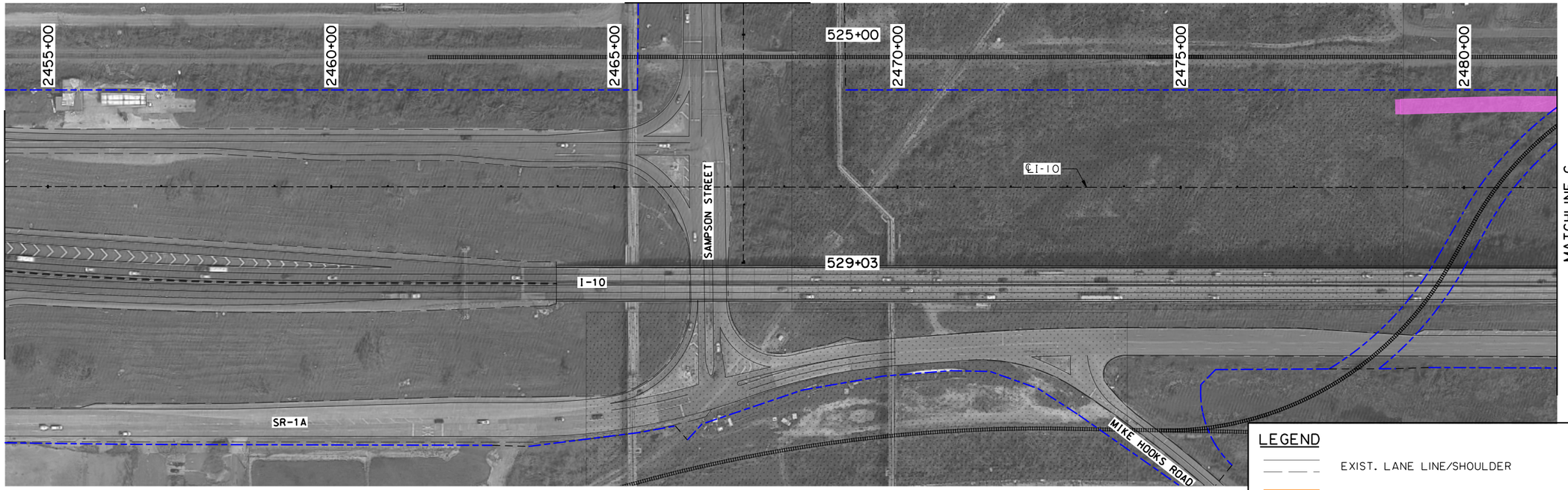

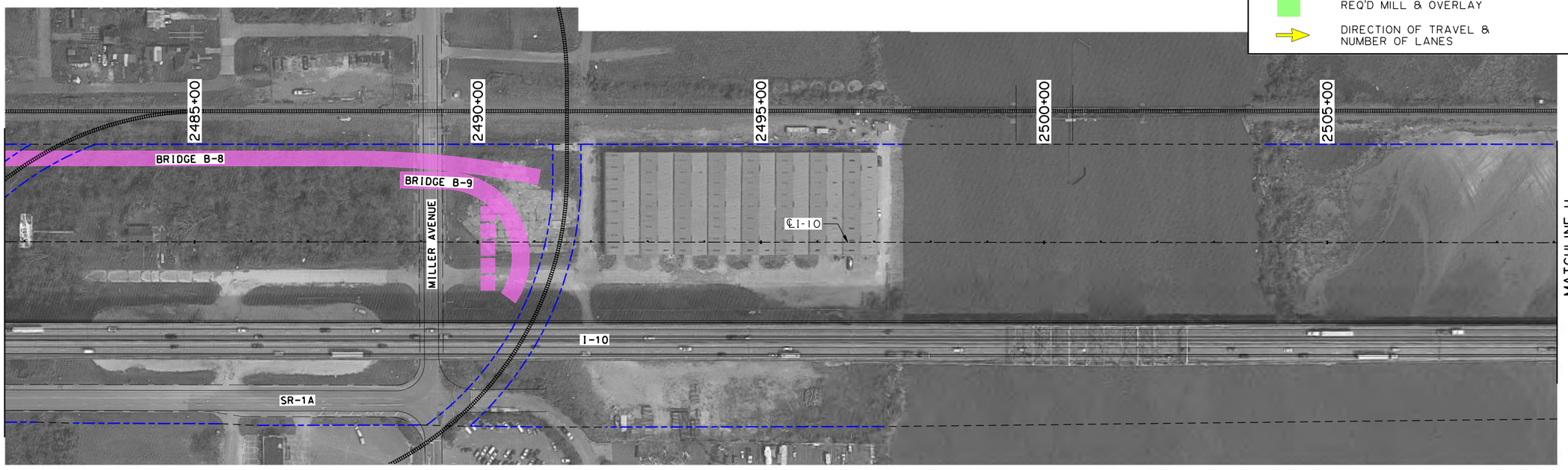

LEGEND

- EXIST. LANE LINE/SHOULDER
- SHIFTED TEMPORARY LANE LINE/SHOULDER
- EXIST. OR REQ'D R/W
- DESIGN BUILD LIMITS
- TEMPORARY CONCRETE BARRIERS
- CONSTRUCTION THIS PHASE
- CONSTRUCTED PREVIOUS PHASE
- REQ'D TEMPORARY PAVEMENT
- REQ'D MILL & OVERLAY
- DIRECTION OF TRAVEL & NUMBER OF LANES

SHEET NUMBER	40
PARISH	CALCASIEU
CONTROL SECTION	450-91
STATE PROJECT	H.003931

DESIGN	G. McCALL	DETAIL	M.HELMINGER	REVIEW	SERIES # 4 OF 7
CHECK	M.HELMINGER	CHECK	G. McCALL		

TECHNICAL PROPOSAL PLANS

PRELIMINARY
NOT FOR CONSTRUCTION

ENGINEER:
GLENN McCALL

LICENSE #:
29639

DATE:
5/25/2023

NO.	DATE	REVISION OR CHANGE ORDER DESCRIPTION	BY

SUGGESTED SEQUENCE OF CONSTRUCTION

PHASE I

I-10 CALCASIEU RIVER BRIDGE P3

DOTD LOUISIANA DEPARTMENT OF TRANSPORTATION & DEVELOPMENT

CBP COLUMBIA BRIDGE PARTNERS

TECHNICAL PROPOSAL PLANS
S:\xdrive\HUVAL Projects\7262 (I-10 Calcasieu P3)\05 Drawings\Roadway\Border to Print\XX_MOT_Phase 1.dgn 5/25/2023 2:26:08 PM

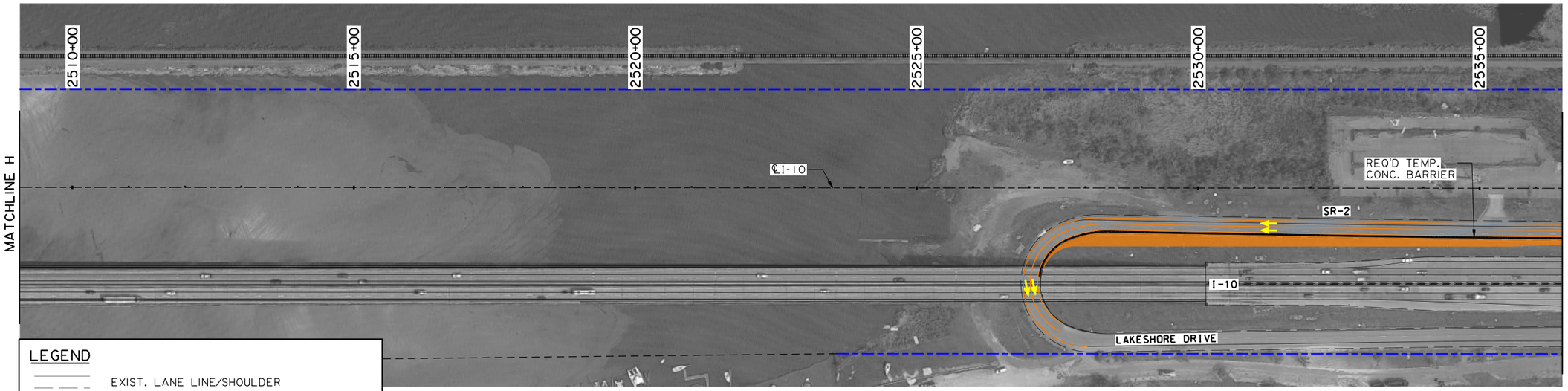

LEGEND

- EXIST. LANE LINE/SHOULDER
- SHIFTED TEMPORARY LANE LINE/SHOULDER
- EXIST. OR REQ'D R/W
- DESIGN BUILD LIMITS
- TEMPORARY CONCRETE BARRIERS
- CONSTRUCTION THIS PHASE
- CONSTRUCTED PREVIOUS PHASE
- REQ'D TEMPORARY PAVEMENT
- REQ'D MILL & OVERLAY
- DIRECTION OF TRAVEL & NUMBER OF LANES

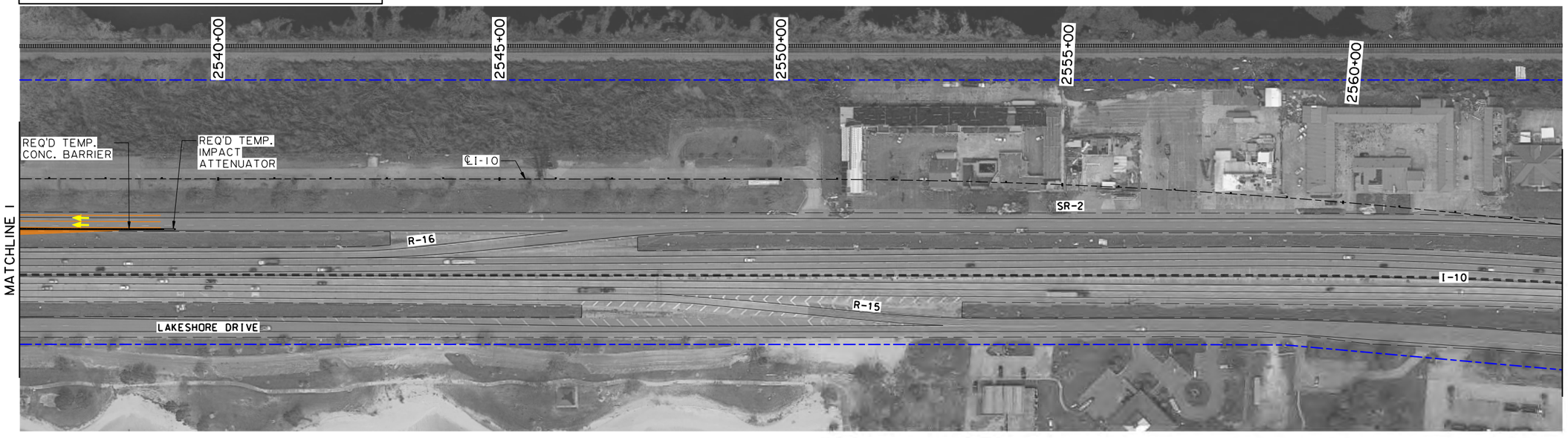

SUGGESTED SEQUENCE OF CONSTRUCTION
PHASE I

I-10 CALCASIEU RIVER BRIDGE P3

SHEET NUMBER 41

PARISH	CONTROL SECTION	STATE PROJECT
CALCASIEU	450-91	H.003931

DESIGN	CHECK	DETAIL	CHECK	REVIEW	SERIES
G. McCALL	M.HELLMINGER	M.HELLMINGER	G. McCALL		5 OF 7

TECHNICAL PROPOSAL PLANS
PRELIMINARY
NOT FOR CONSTRUCTION
ENGINEER: GLENN McCALL
LICENSE #: 29639
DATE: 5/25/2023

NO.	DATE	REVISION OR CHANGE ORDER DESCRIPTION	BY

LOUISIANA DEPARTMENT OF TRANSPORTATION & DEVELOPMENT
DOTD
CBP

TECHNICAL PROPOSAL PLANS
S:\xdrive\HUVAL Projects\7262 (I-10 Calcasieu P3)\05 Drawings\Roadway\Border to Print\XX_MOT_Phase 1.dgn 5/25/2023 2:26:10 PM

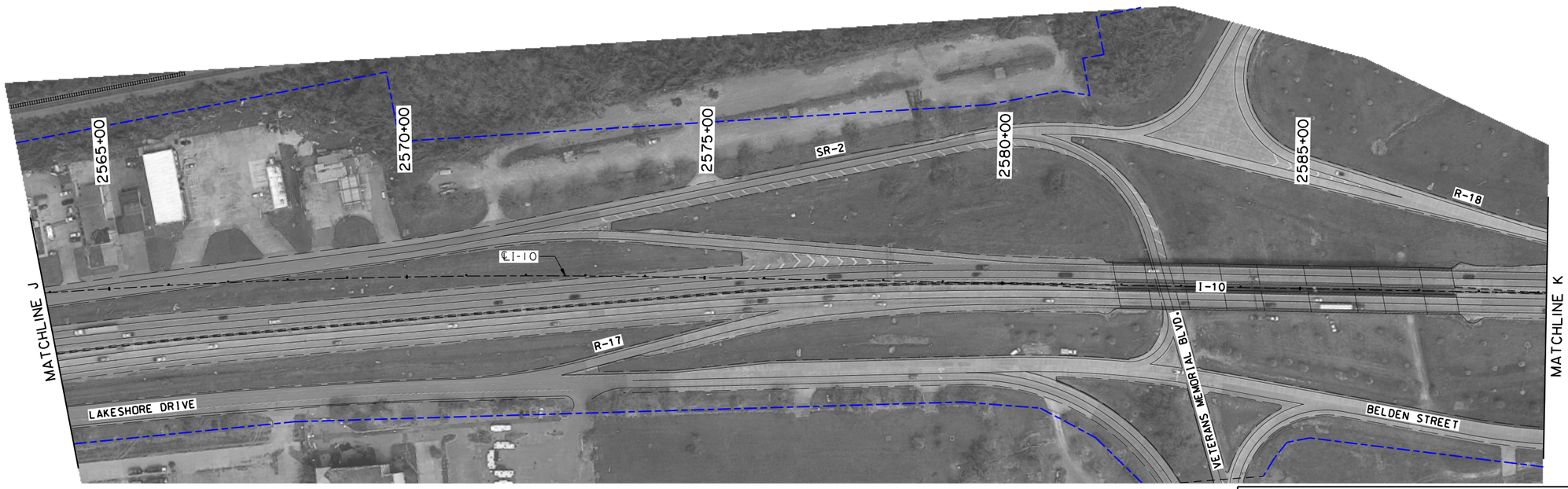

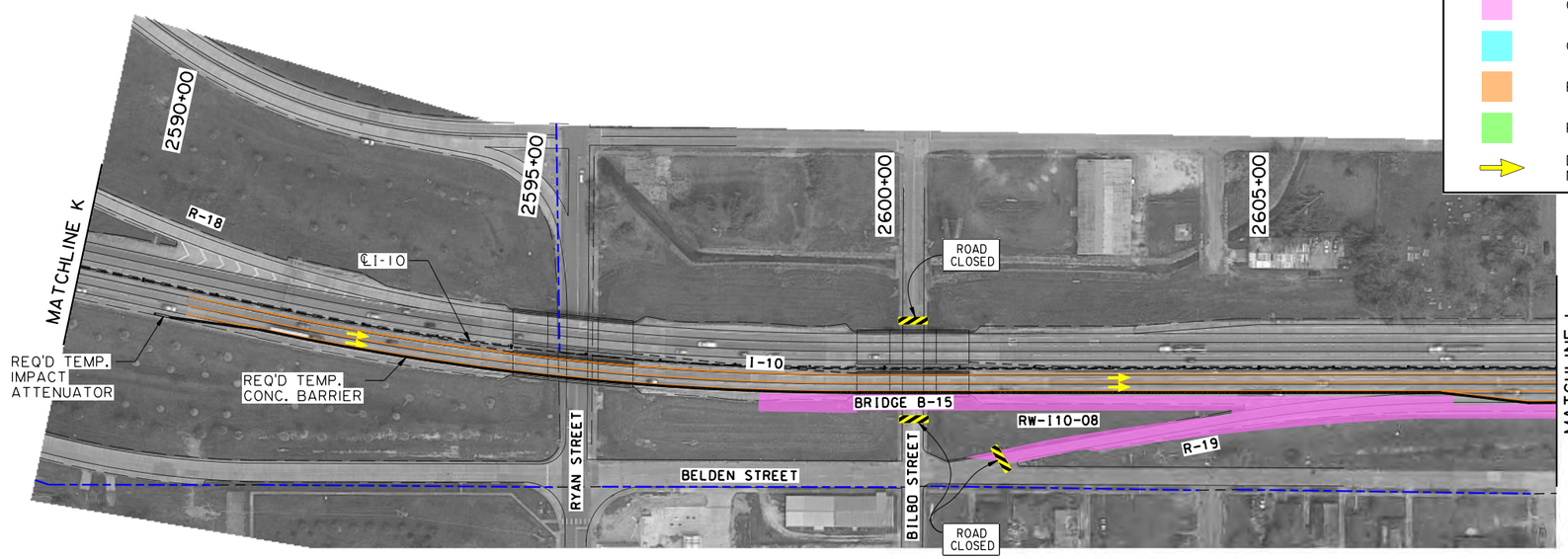

LEGEND

- EXIST. LANE LINE/SHOULDER
- SHIFTED TEMPORARY LANE LINE/SHOULDER
- EXIST. OR REQ'D R/W
- DESIGN BUILD LIMITS
- TEMPORARY CONCRETE BARRIERS
- CONSTRUCTION THIS PHASE
- CONSTRUCTED PREVIOUS PHASE
- REQ'D TEMPORARY PAVEMENT
- REQ'D MILL & OVERLAY
- DIRECTION OF TRAVEL & NUMBER OF LANES

SHEET NUMBER 42

PARISH	CONTROL SECTION	STATE PROJECT
CALCASIEU	450-91	H.003931

DESIGN	G. McCALL
CHECK	M.HELMINGER
DETAIL	M.HELMINGER
CHECK	G. McCALL
REVIEW	
SERIES #	6 OF 7

TECHNICAL PROPOSAL PLANS
PRELIMINARY
NOT FOR CONSTRUCTION
ENGINEER:
GLENN McCALL
LICENSE #:
29639
DATE:
5/25/2023

NO.	DATE	REVISION OR CHANGE ORDER DESCRIPTION	BY

SUGGESTED SEQUENCE OF CONSTRUCTION

PHASE I

I-10 CALCASIEU RIVER BRIDGE P3

S:\xdrive\HUVAL Projects\7262 (I-10 Calcasieu P3)\05 Drawings\Roadway\Border to Print\XX_MOT_Phase 1.dgn
5/25/2023 2:26:13 PM

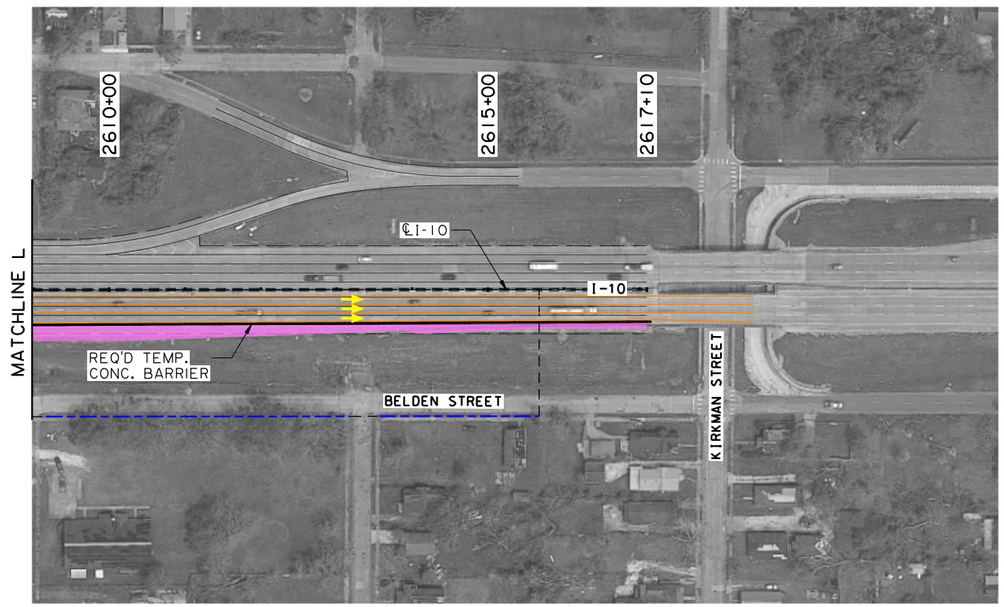

N

MATCHLINE N (SHEET 1 OF 7)



N

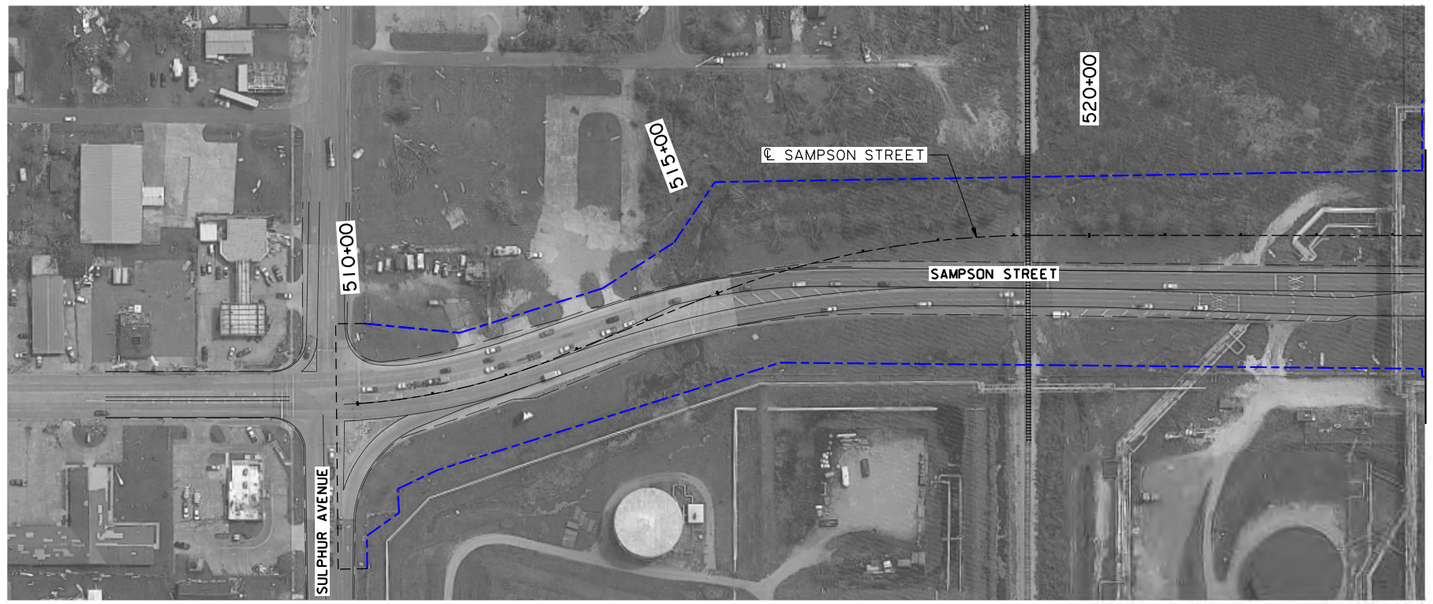

LEGEND

- EXIST. LANE LINE/SHOULDER
- SHIFTED TEMPORARY LANE LINE/SHOULDER
- EXIST. OR REQ'D R/W
- DESIGN BUILD LIMITS
- TEMPORARY CONCRETE BARRIERS
- CONSTRUCTION THIS PHASE
- CONSTRUCTED PREVIOUS PHASE
- REQ'D TEMPORARY PAVEMENT
- REQ'D MILL & OVERLAY
- DIRECTION OF TRAVEL & NUMBER OF LANES

SHEET NUMBER 43

PARISH	CONTROL SECTION	STATE PROJECT
CALCASIEU	450-91	H.003931

DESIGN	G. McCALL	DETAIL	M.HELLMINGER	REVIEW	SERIES # 7 OF 7
CHECK	M.HELLMINGER	CHECK	G. McCALL		

TECHNICAL PROPOSAL PLANS

PRELIMINARY
NOT FOR CONSTRUCTION

ENGINEER:
GLENN McCALL

LICENSE #:
29639

DATE:
5/25/2023

NO.	DATE	REVISION OR CHANGE ORDER DESCRIPTION	BY

STATE OF LOUISIANA

SUGGESTED SEQUENCE OF CONSTRUCTION

PHASE I

I-10 CALCASIEU RIVER BRIDGE P3

DOTD LOUISIANA DEPARTMENT OF TRANSPORTATION & DEVELOPMENT

CBP

TECHNICAL PROPOSAL PLANS
S:\xdrive\HUVAL Projects\7262 (I-10 Calcasieu P3)\05 Drawings\Roadway\Border to Print\XX_MOT_Phase 2.dgn
5/25/2023 2:26:16 PM

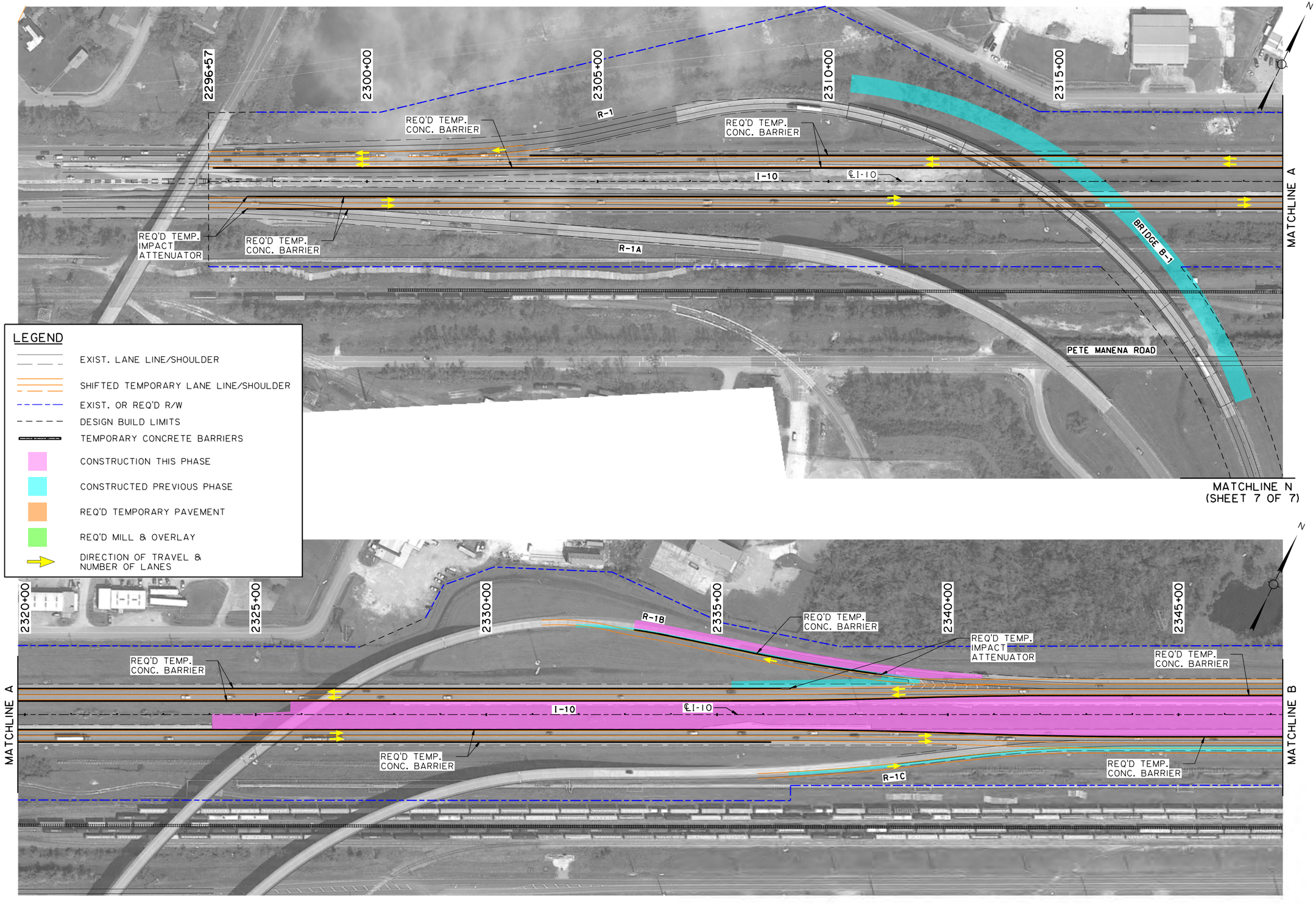

SUGGESTED SEQUENCE OF CONSTRUCTION
PHASE 2

I-10 CALCASIEU RIVER BRIDGE P3

SHEET NUMBER	44

PARISH	CONTROL SECTION	STATE PROJECT
CALCASIEU	450-91	H.003931

DESIGN	G. McCALL	DETAIL	M.HELMINGER	REVIEW	SERIES # 1 OF 7
CHECK	M.HELMINGER	CHECK	G. McCALL		

TECHNICAL PROPOSAL PLANS
PRELIMINARY
NOT FOR CONSTRUCTION
ENGINEER: GLENN McCALL
LICENSE #: 29639
DATE: 5/25/2023

NO.	DATE	REVISION OR CHANGE ORDER DESCRIPTION	BY

S:\xdrive\HUVAL Projects\7262 (I-10 Calcasieu P3)\05 Drawings\Roadway\Border to Print\XX_MOT_Phase 2.dgn 5/25/2023 2:26:23 PM

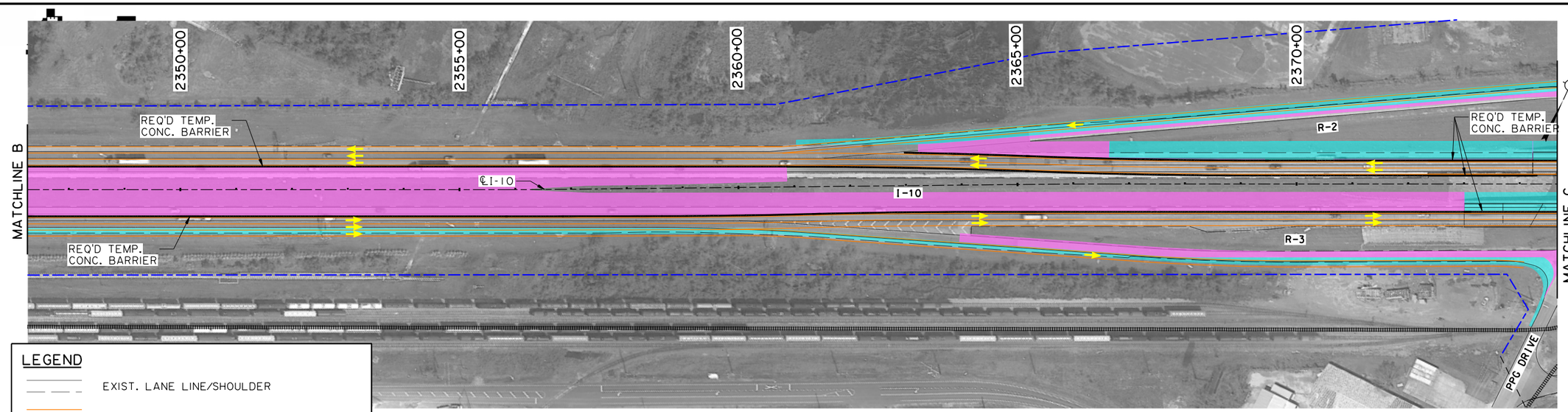

LEGEND

- EXIST. LANE LINE/SHOULDER
- SHIFTED TEMPORARY LANE LINE/SHOULDER
- EXIST. OR REQ'D R/W
- DESIGN BUILD LIMITS
- TEMPORARY CONCRETE BARRIERS
- CONSTRUCTION THIS PHASE
- CONSTRUCTED PREVIOUS PHASE
- REQ'D TEMPORARY PAVEMENT
- REQ'D MILL & OVERLAY
- DIRECTION OF TRAVEL & NUMBER OF LANES

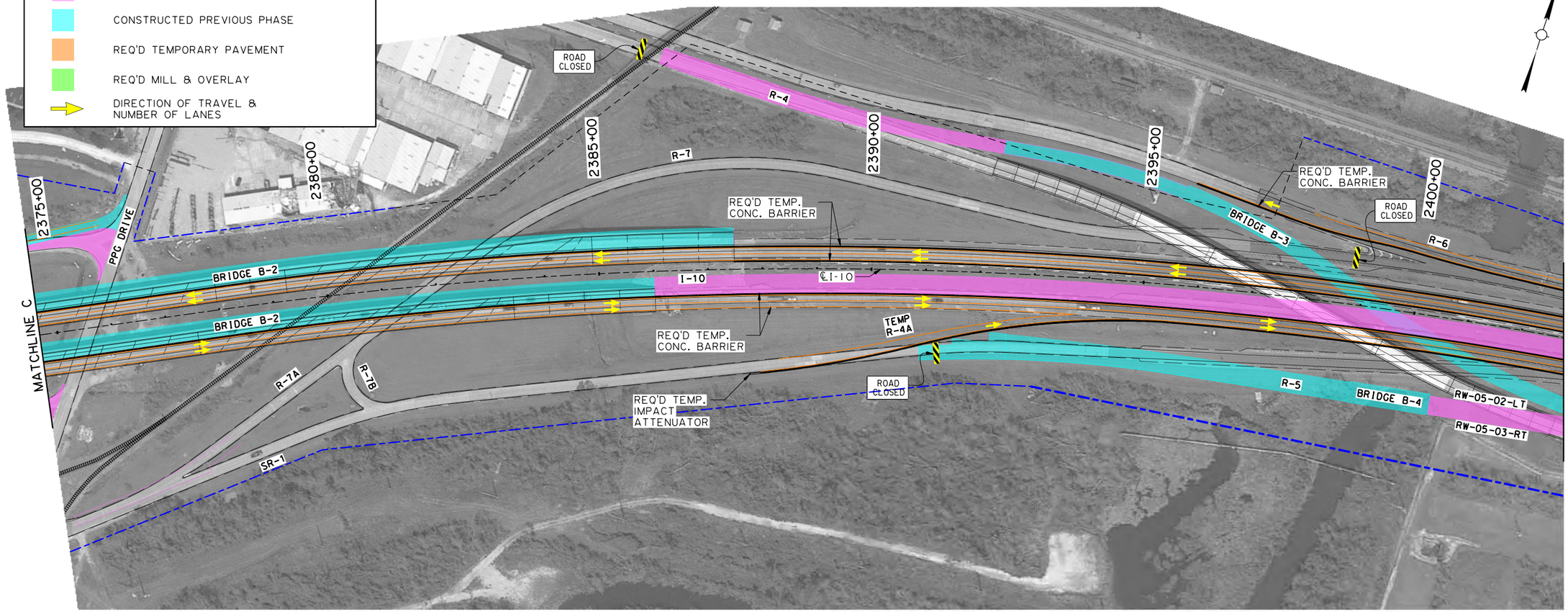

SHEET NUMBER	45
PARISH	CALCASIEU
CONTROL SECTION	450-91
STATE PROJECT	H.003931
DESIGN	G. McCALL
CHECK	M.HELMINGER
DETAIL	M.HELMINGER
CHECK	G. McCALL
REVIEW	
SERIES #	2 OF 7

TECHNICAL PROPOSAL PLANS

PRELIMINARY
NOT FOR CONSTRUCTION

ENGINEER:
GLENN McCALL

LICENSE #:
29639

DATE:
5/25/2023

NO.	DATE	REVISION OR CHANGE ORDER DESCRIPTION	BY

SUGGESTED SEQUENCE OF CONSTRUCTION
PHASE 2

I-10 CALCASIEU RIVER BRIDGE P3

DOTD LOUISIANA DEPARTMENT OF TRANSPORTATION & DEVELOPMENT

CBP CALCASIEU BRIDGE PARTNERS

5/25/2023 2:26:28 PM

TECHNICAL PROPOSAL PLANS

S:\xdrive\HUVAL Projects\7262 (I-10 Calcasieu P3)\05 Drawings\Roadway\Border to Print\XX_MOT_Phase 2.dgn

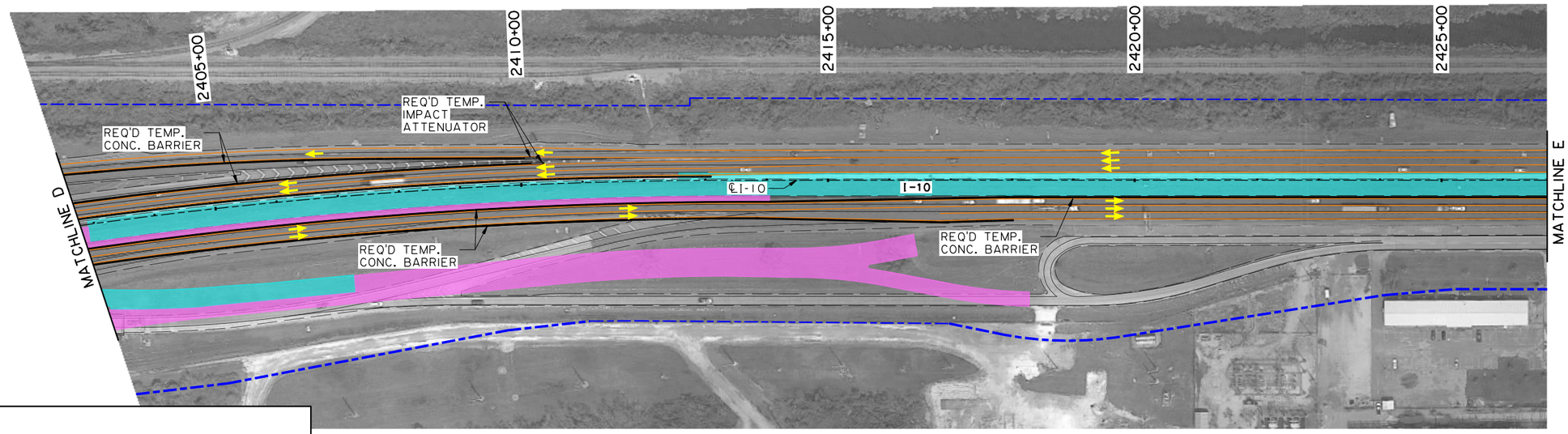

N

LEGEND

- EXIST. LANE LINE/SHOULDER
- SHIFTED TEMPORARY LANE LINE/SHOULDER
- EXIST. OR REQ'D R/W
- DESIGN BUILD LIMITS
- TEMPORARY CONCRETE BARRIERS
- CONSTRUCTION THIS PHASE
- CONSTRUCTED PREVIOUS PHASE
- REQ'D TEMPORARY PAVEMENT
- REQ'D MILL & OVERLAY
- DIRECTION OF TRAVEL & NUMBER OF LANES

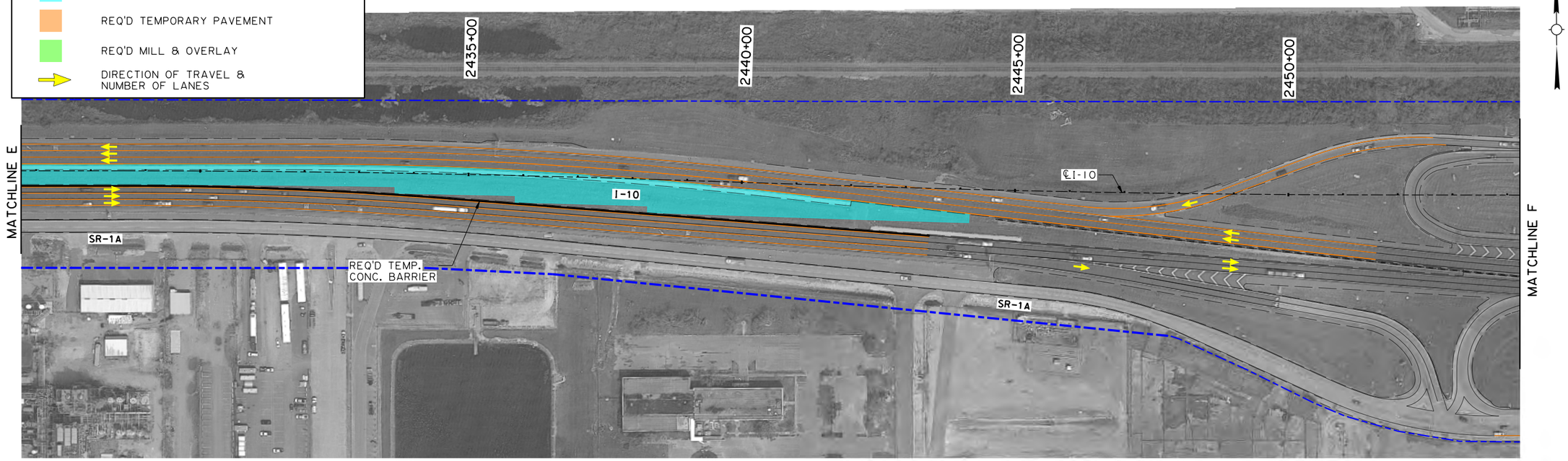

N

SHEET NUMBER 46

PARISH	CONTROL SECTION	STATE PROJECT
CALCASIEU	450-91	H.003931

DESIGN	CHECK	DETAIL	CHECK	REVIEW	SERIES
G. McCALL	M.HELMINGER	M.HELMINGER	G. McCALL		3 OF 7

TECHNICAL PROPOSAL PLANS

PRELIMINARY
NOT FOR CONSTRUCTION

ENGINEER:
GLENN McCALL

LICENSE #:
29639

DATE:
5/25/2023

NO.	DATE	REVISION OR CHANGE ORDER DESCRIPTION	BY

STATE OF LOUISIANA DEPARTMENT OF TRANSPORTATION AND DEVELOPMENT

SUGGESTED SEQUENCE OF CONSTRUCTION

PHASE 2

I-10 CALCASIEU RIVER BRIDGE P3

DOTD LOUISIANA DEPARTMENT OF TRANSPORTATION & DEVELOPMENT

CBP

TECHNICAL PROPOSAL PLANS

S:\xdrive\HUVAL Projects\7262 (I-10 Calcasieu P3)\05 Drawings\Roadway\Border to Print\XX_MOT_Phase 2.dgn 5/25/2023 2:26:32 PM

MATCHLINE M (SHEET 7 OF 7)

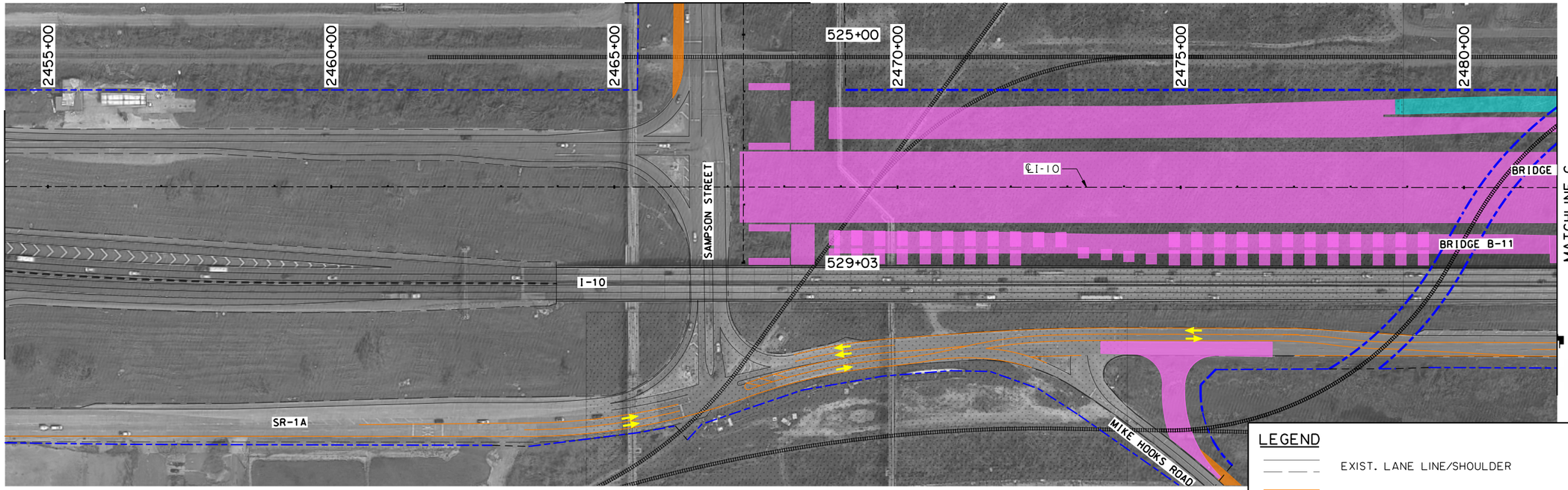

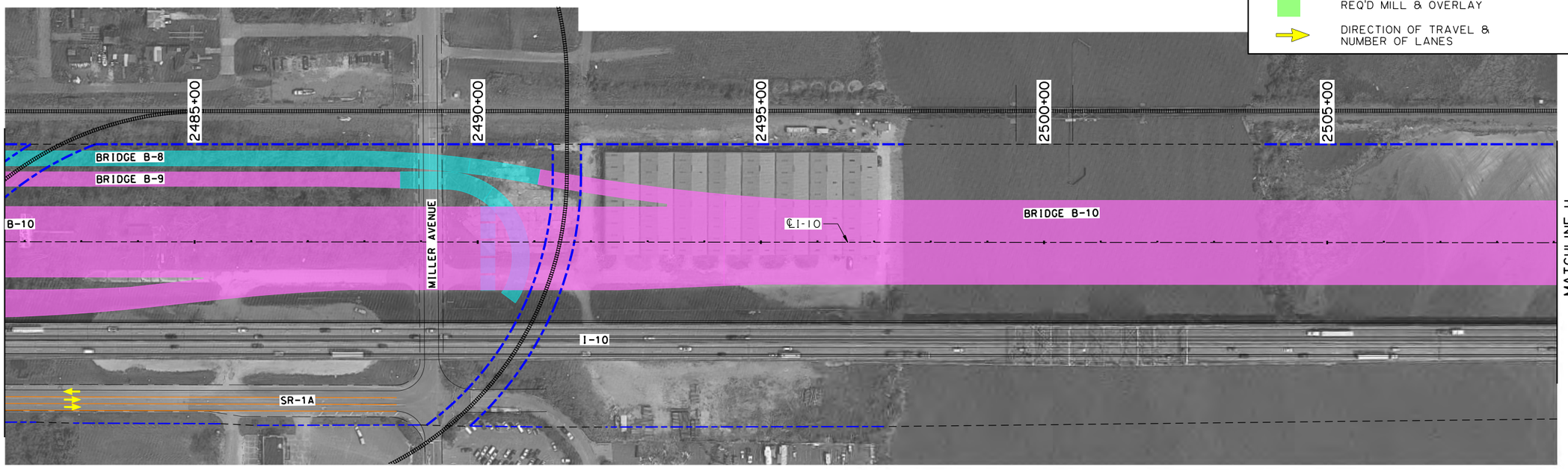

LEGEND

- EXIST. LANE LINE/SHOULDER
- SHIFTED TEMPORARY LANE LINE/SHOULDER
- EXIST. OR REQ'D R/W
- DESIGN BUILD LIMITS
- TEMPORARY CONCRETE BARRIERS
- CONSTRUCTION THIS PHASE
- CONSTRUCTED PREVIOUS PHASE
- REQ'D TEMPORARY PAVEMENT
- REQ'D MILL & OVERLAY
- DIRECTION OF TRAVEL & NUMBER OF LANES

SHEET NUMBER 47

PARISH	CONTROL SECTION	STATE PROJECT
CALCASIEU	450-91	H.003931

DESIGN	CHECK	DETAIL	CHECK	REVIEW	SERIES = 4 OF 7
G. McCALL	M.HELMINGER	M.HELMINGER	G. McCALL		

TECHNICAL PROPOSAL PLANS

PRELIMINARY
NOT FOR CONSTRUCTION

ENGINEER:
GLENN McCALL

LICENSE #:
29639

DATE:
5/25/2023

NO.	DATE	REVISION OR CHANGE ORDER DESCRIPTION	BY

SUGGESTED SEQUENCE OF CONSTRUCTION

PHASE 2

I-10 CALCASIEU RIVER BRIDGE P3

DOTD LOUISIANA DEPARTMENT OF TRANSPORTATION & DEVELOPMENT

CBP COLORADO BRIDGE PARTNER

TECHNICAL PROPOSAL PLANS
S:\xdrive\HUVAL Projects\7262 (I-10 Calcasieu P3)\05 Drawings\Roadway\Border to Print\XX_MOT_Phase 2.dgn
5/25/2023 2:26:34 PM

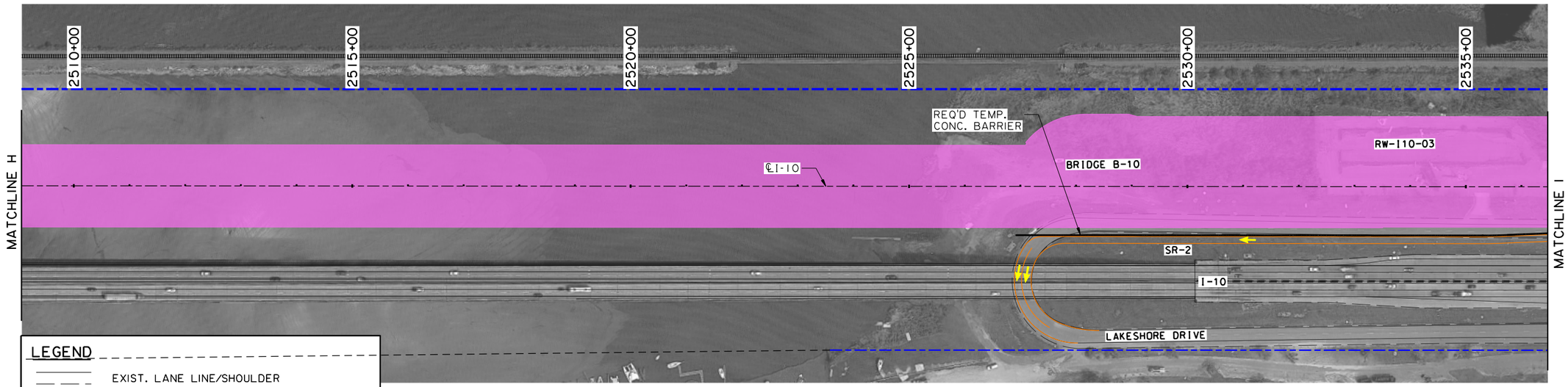

LEGEND

- EXIST. LANE LINE/SHOULDER
- SHIFTED TEMPORARY LANE LINE/SHOULDER
- EXIST. OR REQ'D R/W
- DESIGN BUILD LIMITS
- TEMPORARY CONCRETE BARRIERS
- CONSTRUCTION THIS PHASE
- CONSTRUCTED PREVIOUS PHASE
- REQ'D TEMPORARY PAVEMENT
- REQ'D MILL & OVERLAY
- DIRECTION OF TRAVEL & NUMBER OF LANES

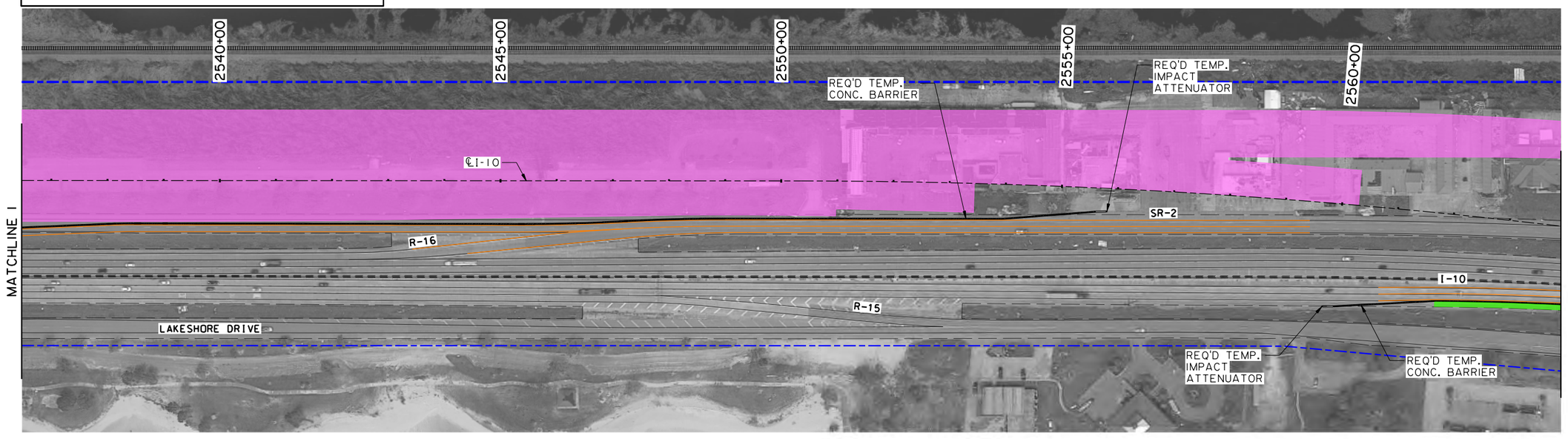

SHEET NUMBER 48

PARISH	CONTROL SECTION	STATE PROJECT
CALCASIEU	450-91	H.003931

DESIGN	G. McCALL	DETAIL	M.HELLMINGER	REVIEW	5 OF 7
CHECK	M.HELLMINGER	CHECK	G. McCALL	SERIES #	

TECHNICAL PROPOSAL PLANS

PRELIMINARY
NOT FOR CONSTRUCTION

ENGINEER:
GLENN McCALL

LICENSE #:
29639

DATE:
5/25/2023

NO.	DATE	REVISION OR CHANGE ORDER DESCRIPTION	BY

SUGGESTED SEQUENCE OF CONSTRUCTION
PHASE 2

I-10 CALCASIEU RIVER BRIDGE P3

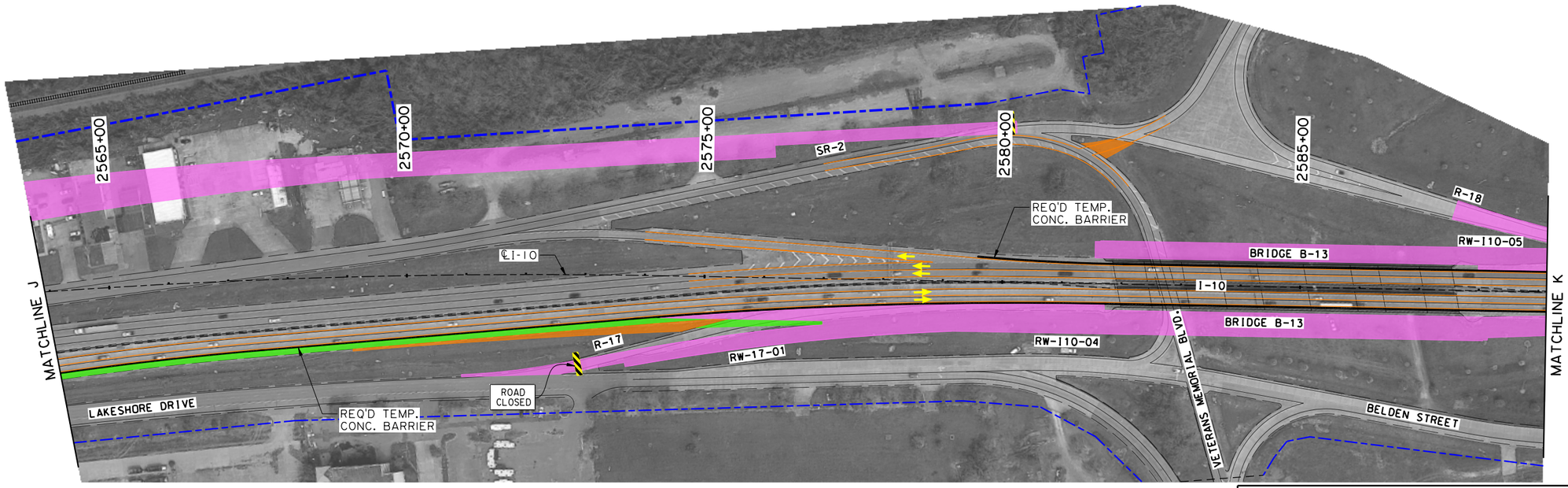

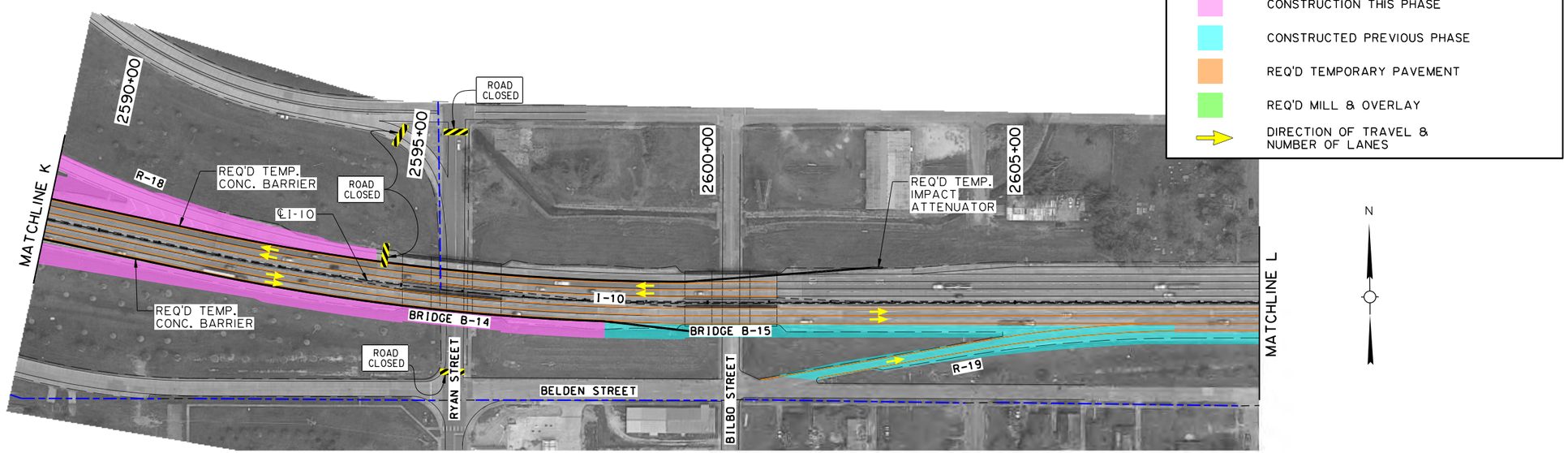

LEGEND

- EXIST. LANE LINE/SHOULDER
- SHIFTED TEMPORARY LANE LINE/SHOULDER
- EXIST. OR REQ'D R/W
- DESIGN BUILD LIMITS
- TEMPORARY CONCRETE BARRIERS
- CONSTRUCTION THIS PHASE
- CONSTRUCTED PREVIOUS PHASE
- REQ'D TEMPORARY PAVEMENT
- REQ'D MILL & OVERLAY
- DIRECTION OF TRAVEL & NUMBER OF LANES

SUGGESTED SEQUENCE OF CONSTRUCTION

PHASE 2

I-10 CALCASIEU RIVER BRIDGE P3

SHEET NUMBER	49

PARISH	CONTROL SECTION	STATE PROJECT
CALCASIEU	450-91	H.003931

DESIGN	CHECK	DETAIL	CHECK	REVIEW	SERIES
G. McCALL	M.HELMINGER	M.HELMINGER	G. McCALL		6 OF 7

TECHNICAL PROPOSAL PLANS

PRELIMINARY
NOT FOR CONSTRUCTION

ENGINEER:
GLENN McCALL

LICENSE #:
29639

DATE:
5/25/2023

NO.	DATE	REVISION OR CHANGE ORDER DESCRIPTION	BY

DOTD
LOUISIANA DEPARTMENT OF TRANSPORTATION & DEVELOPMENT

CBP
CALCASIEU BRIDGE PARTNERS

TECHNICAL PROPOSAL PLANS

5/25/2023 2:26:37 PM

S:\xdrive\HUVAL Projects\7262 (I-10 Calcasieu P3)\05 Drawings\Roadway\Border to Print\XX_MOT_Phase 2.dgn

S:\xdrive\HUVAL Projects\7262 (I-10 Calcasieu P3)\05 Drawings\Roadway\Border to Print\XX_MOT_Phase 2.dgn 5/25/2023 2:26:40 PM

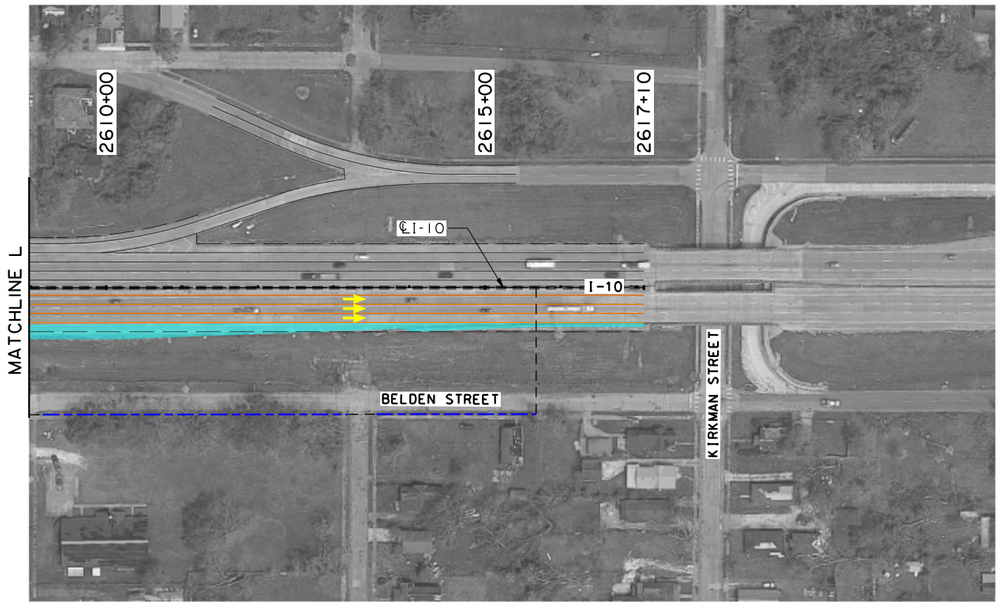

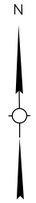

MATCHLINE N (SHEET 1 OF 7)



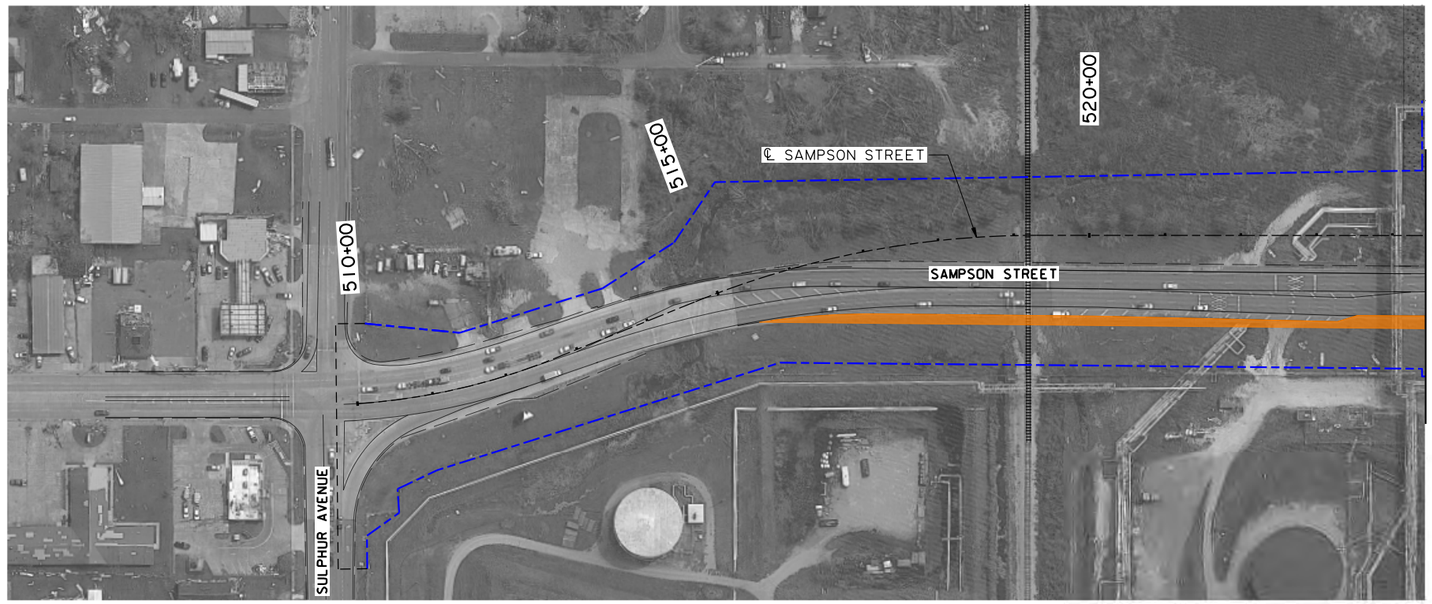

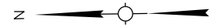

LEGEND

- EXIST. LANE LINE/SHOULDER
- SHIFTED TEMPORARY LANE LINE/SHOULDER
- EXIST. OR REQ'D R/W
- DESIGN BUILD LIMITS
- TEMPORARY CONCRETE BARRIERS
- CONSTRUCTION THIS PHASE
- CONSTRUCTED PREVIOUS PHASE
- REQ'D TEMPORARY PAVEMENT
- REQ'D MILL & OVERLAY
- DIRECTION OF TRAVEL & NUMBER OF LANES

SHEET NUMBER	50

PARISH	CONTROL SECTION	STATE PROJECT
CALCASIEU	450-91	H.003931

DESIGN	G. McCALL
CHECK	M.HELLMINGER
DETAIL	M.HELLMINGER
CHECK	G. McCALL
REVIEW	
SERIES #	7 OF 7

TECHNICAL PROPOSAL PLANS

PRELIMINARY
NOT FOR CONSTRUCTION

ENGINEER:
GLENN McCALL

LICENSE #:
29639

DATE:
5/25/2023

NO.	DATE	REVISION OR CHANGE ORDER DESCRIPTION	BY

SUGGESTED SEQUENCE OF CONSTRUCTION
PHASE 2

I-10 CALCASIEU RIVER BRIDGE P3

TECHNICAL PROPOSAL PLANS
S:\xdrive\HUVAL Projects\7262 (I-10 Calcasieu P3)\05 Drawings\Roadway\Border to Print\XX_MOT_Phase 3.dgn 5/25/2023 2:26:43 PM

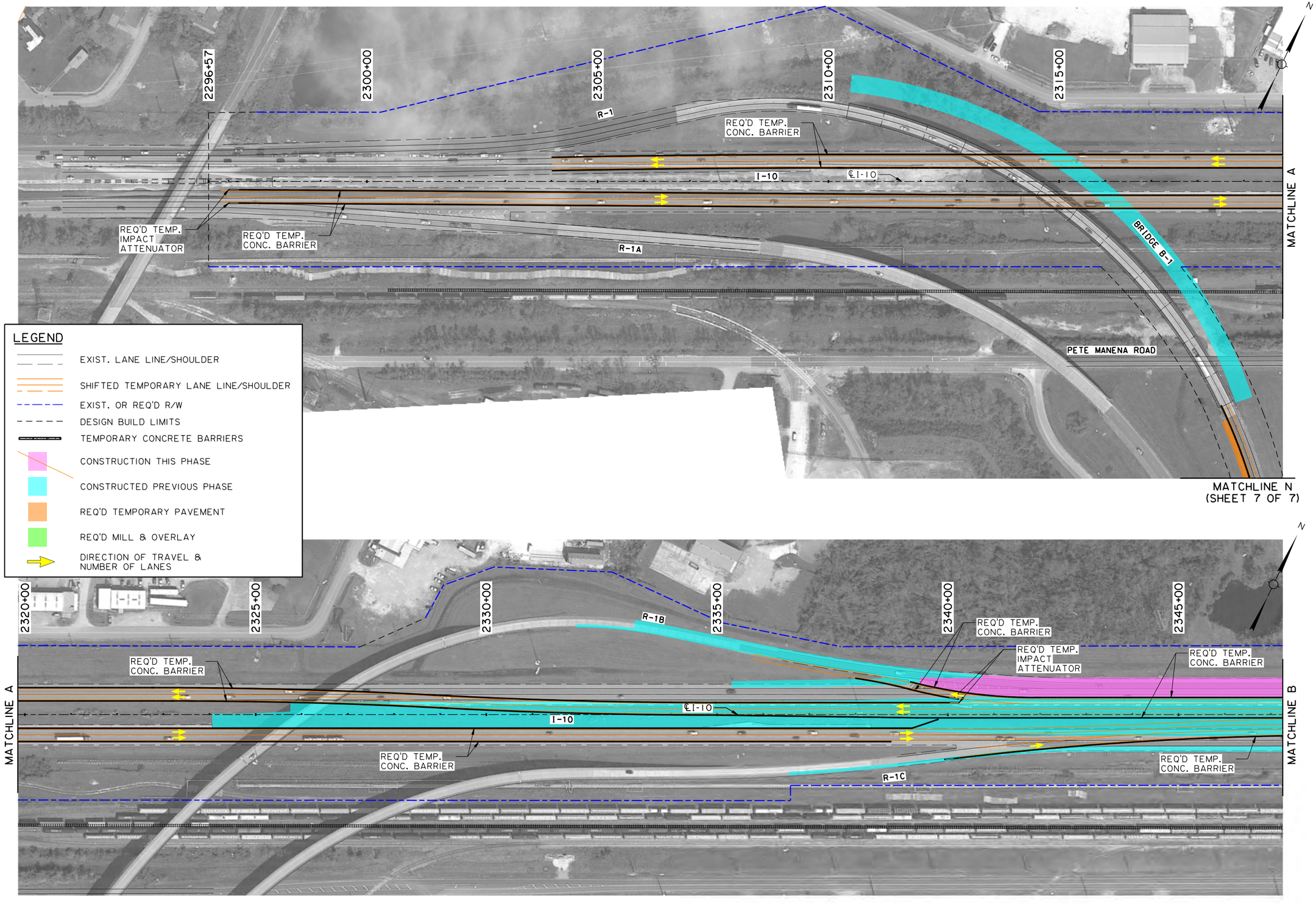

SUGGESTED SEQUENCE OF CONSTRUCTION
PHASE 3

I-10 CALCASIEU RIVER BRIDGE P3

SHEET NUMBER	51
PARISH	CALCASIEU
CONTROL SECTION	450-91
STATE PROJECT	H.003931

DESIGN	G. McCALL	DETAIL	M.HELMINGER	REVIEW	SERIES = 1 OF 7
CHECK	M.HELMINGER	CHECK	G. McCALL		

TECHNICAL PROPOSAL PLANS
PRELIMINARY
NOT FOR CONSTRUCTION
ENGINEER:
GLENN McCALL
LICENSE #:
29639
DATE:
5/25/2023

NO.	DATE	REVISION OR CHANGE ORDER DESCRIPTION	BY

S:\xdrive\HUVAL Projects\7262 (I-10 Calcasieu P3)\05 Drawings\Roadway\Border to Print\XX_MOT_Phase 3.dgn
5/25/2023 2:26:46 PM

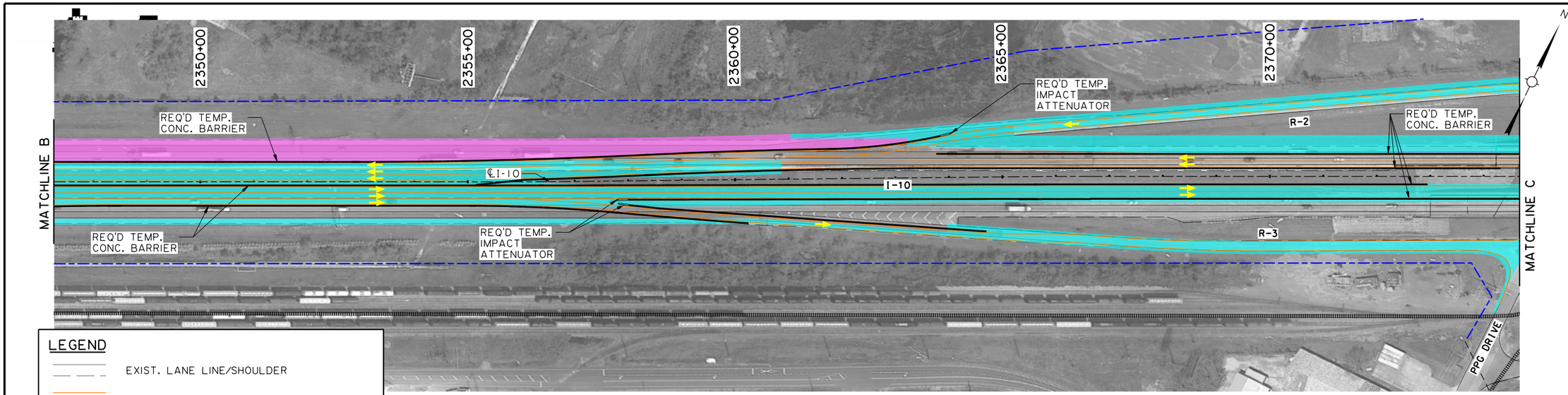

LEGEND

- EXIST. LANE LINE/SHOULDER
- SHIFTED TEMPORARY LANE LINE/SHOULDER
- EXIST. OR REQ'D R/W
- DESIGN BUILD LIMITS
- TEMPORARY CONCRETE BARRIERS
- CONSTRUCTION THIS PHASE
- CONSTRUCTED PREVIOUS PHASE
- REQ'D TEMPORARY PAVEMENT
- REQ'D MILL & OVERLAY
- DIRECTION OF TRAVEL & NUMBER OF LANES

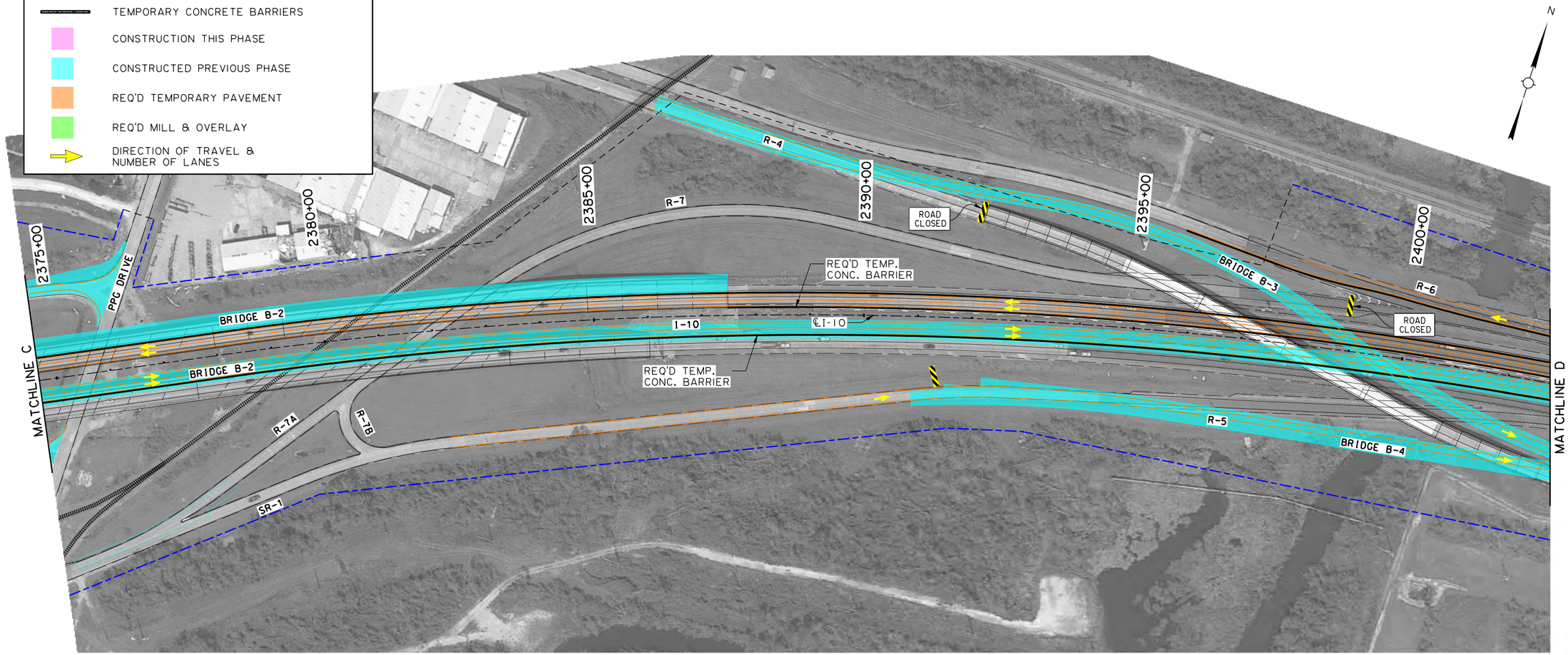

SUGGESTED SEQUENCE OF CONSTRUCTION
PHASE 3

I-10 CALCASIEU RIVER BRIDGE P3

SHEET NUMBER	52

PARISH	CONTROL SECTION	STATE PROJECT
CALCASIEU	450-91	H.003931

	DESIGN	CHECK	DETAIL	CHECK	REVIEW	SERIES #
	G. McCALL	M.HELMINGER	M.HELMINGER	G. McCALL		2 OF 7

TECHNICAL PROPOSAL PLANS
PRELIMINARY
NOT FOR CONSTRUCTION
ENGINEER: GLENN McCALL
LICENSE #: 29639
DATE: 5/25/2023

NO.	DATE	REVISION OR CHANGE ORDER DESCRIPTION	BY

TECHNICAL PROPOSAL PLANS

S:\xdrive\HUVAL Projects\7262 (I-10 Calcasieu P3)\05 Drawings\Roadway\Border to Print\XX_MOT_Phase 3.dgn 5/25/2023 2:26:52 PM

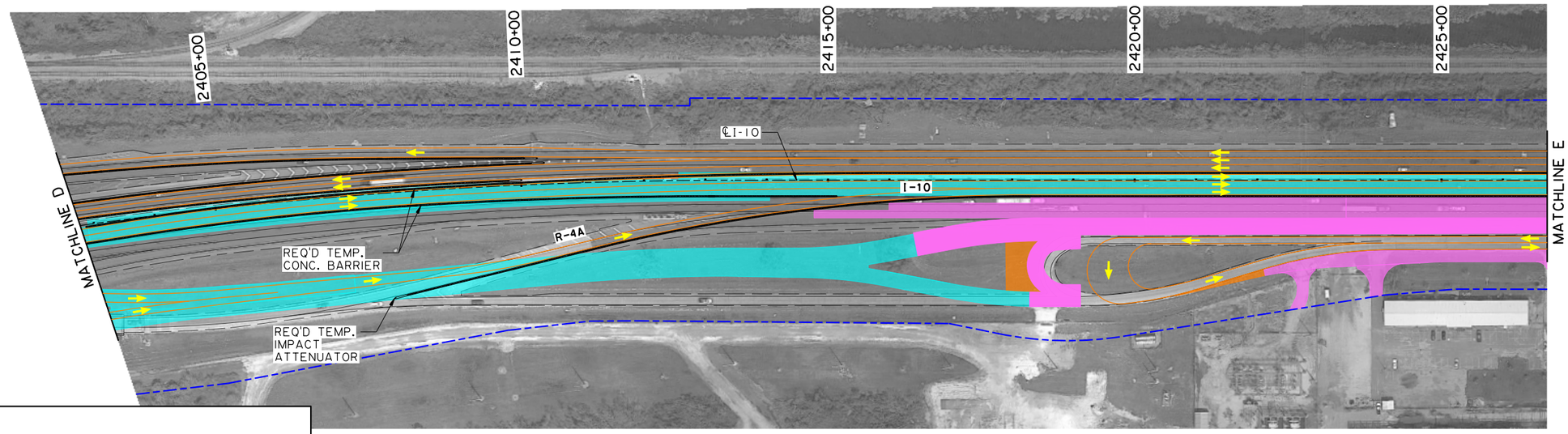

N

LEGEND

- EXIST. LANE LINE/SHOULDER
- SHIFTED TEMPORARY LANE LINE/SHOULDER
- EXIST. OR REQ'D R/W
- DESIGN BUILD LIMITS
- TEMPORARY CONCRETE BARRIERS
- CONSTRUCTION THIS PHASE
- CONSTRUCTED PREVIOUS PHASE
- REQ'D TEMPORARY PAVEMENT
- REQ'D MILL & OVERLAY
- DIRECTION OF TRAVEL & NUMBER OF LANES

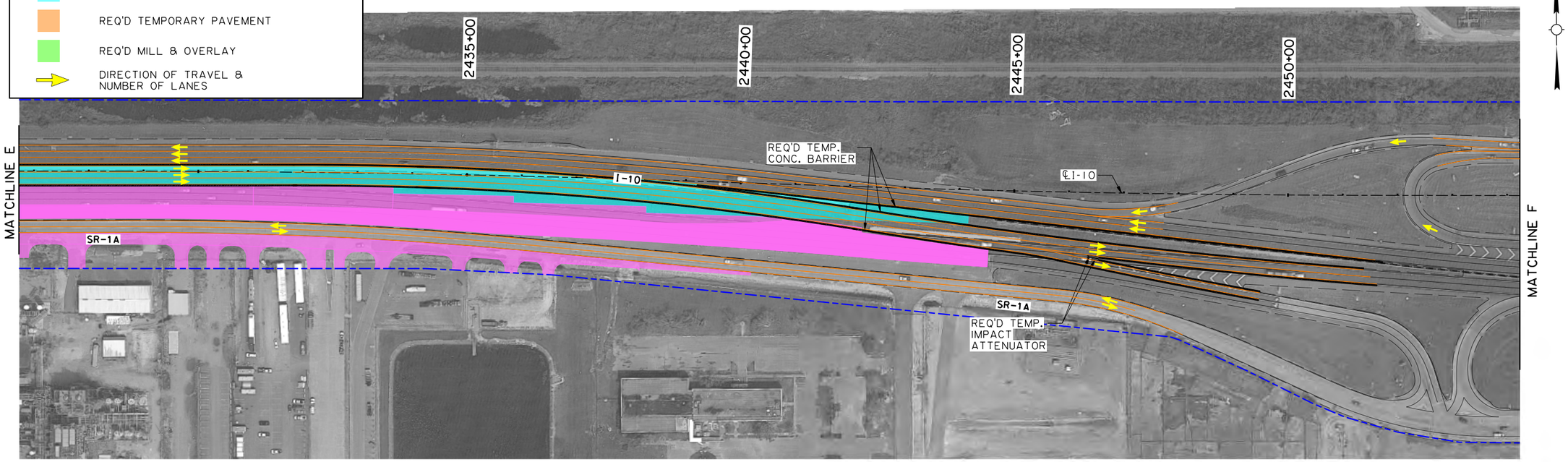

N

SHEET NUMBER	53

PARISH	CONTROL SECTION	STATE PROJECT
CALCASIEU	450-91	H.003931

DESIGN	CHECK	DETAIL	CHECK	REVIEW	SERIES
G. McCALL	M.HELMINGER	M.HELMINGER	G. McCALL		3 OF 7

TECHNICAL PROPOSAL PLANS

PRELIMINARY
NOT FOR CONSTRUCTION

ENGINEER:
GLENN McCALL

LICENSE #:
29639

DATE:
5/25/2023

NO.	DATE	REVISION OR CHANGE ORDER DESCRIPTION	BY

STATE OF LOUISIANA
DEPARTMENT OF TRANSPORTATION AND DEVELOPMENT

SUGGESTED SEQUENCE OF CONSTRUCTION

PHASE 3

I-10 CALCASIEU RIVER BRIDGE P3

DOTD
LOUISIANA DEPARTMENT OF TRANSPORTATION & DEVELOPMENT

CBP

MATCHLINE M (SHEET 7 OF 7)

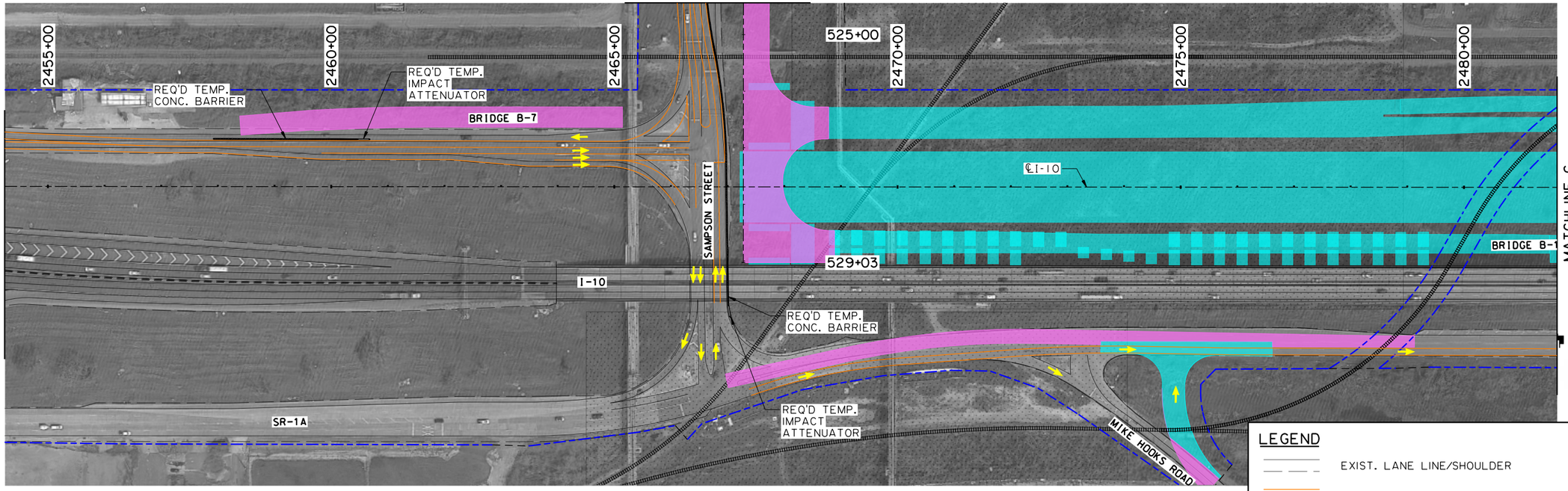

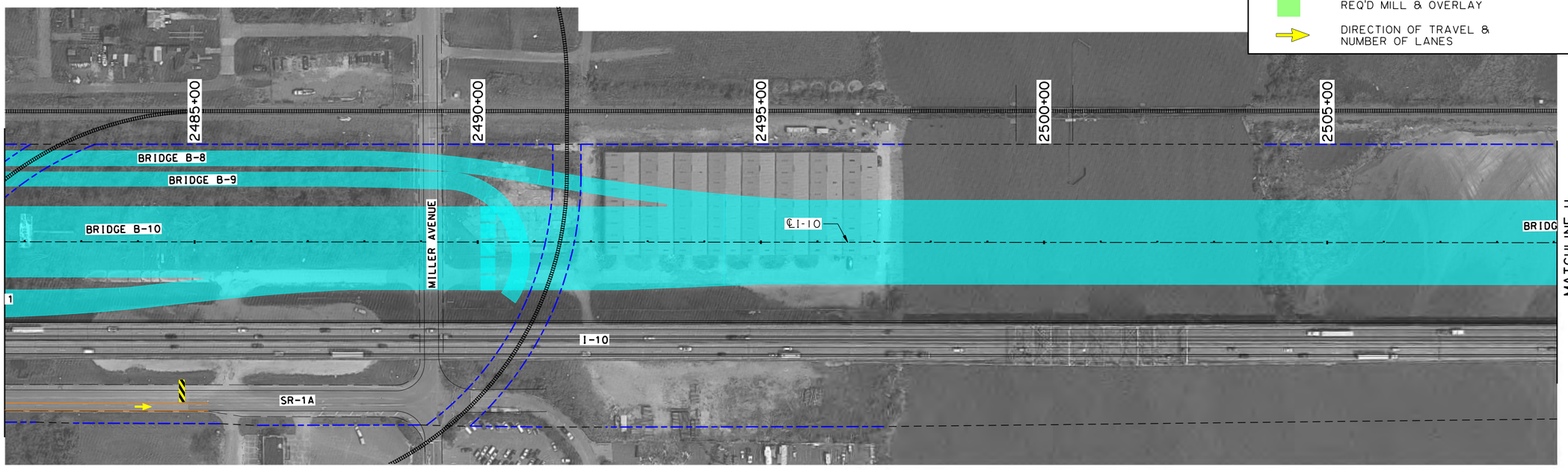

LEGEND

- EXIST. LANE LINE/SHOULDER
- SHIFTED TEMPORARY LANE LINE/SHOULDER
- EXIST. OR REQ'D R/W
- DESIGN BUILD LIMITS
- TEMPORARY CONCRETE BARRIERS
- CONSTRUCTION THIS PHASE
- CONSTRUCTED PREVIOUS PHASE
- REQ'D TEMPORARY PAVEMENT
- REQ'D MILL & OVERLAY
- DIRECTION OF TRAVEL & NUMBER OF LANES

SUGGESTED SEQUENCE OF CONSTRUCTION
PHASE 3

I-10 CALCASIEU RIVER BRIDGE P3

SHEET NUMBER 54

PARISH	CONTROL SECTION	STATE PROJECT
CALCASIEU	450-91	H.003931

DESIGN	CHECK	DETAIL	CHECK	REVIEW	SERIES
G. McCALL	M.HELMINGER	M.HELMINGER	G. McCALL		4 OF 7

TECHNICAL PROPOSAL PLANS
PRELIMINARY
NOT FOR CONSTRUCTION
ENGINEER: GLENN McCALL
LICENSE #: 29639
DATE: 5/25/2023

NO.	DATE	REVISION OR CHANGE ORDER DESCRIPTION	BY

DOTD LOUISIANA DEPARTMENT OF TRANSPORTATION & DEVELOPMENT

CBP COLUMBIA BRIDGE PARTNERS

TECHNICAL PROPOSAL PLANS

S:\xdrive\HUVAL Projects\7262 (I-10 Calcasieu P3)\05 Drawings\Roadway\Border to Print\XX_MOT_Phase 3.dgn 5/25/2023 2:26:55 PM

TECHNICAL PROPOSAL PLANS
S:\xdrive\HUVAL Projects\7262 (I-10 Calcasieu P3)\05 Drawings\Roadway\Border to Print\XX_MOT_Phase 3.dgn
5/25/2023 2:26:57 PM

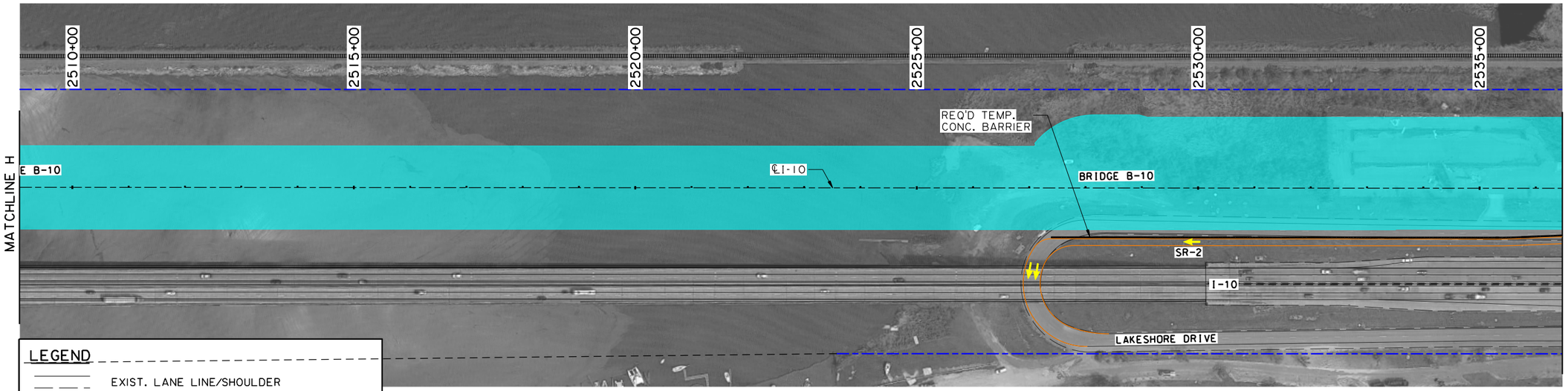

LEGEND

- EXIST. LANE LINE/SHOULDER
- SHIFTED TEMPORARY LANE LINE/SHOULDER
- EXIST. OR REQ'D R/W
- DESIGN BUILD LIMITS
- TEMPORARY CONCRETE BARRIERS
- CONSTRUCTION THIS PHASE
- CONSTRUCTED PREVIOUS PHASE
- REQ'D TEMPORARY PAVEMENT
- REQ'D MILL & OVERLAY
- DIRECTION OF TRAVEL & NUMBER OF LANES

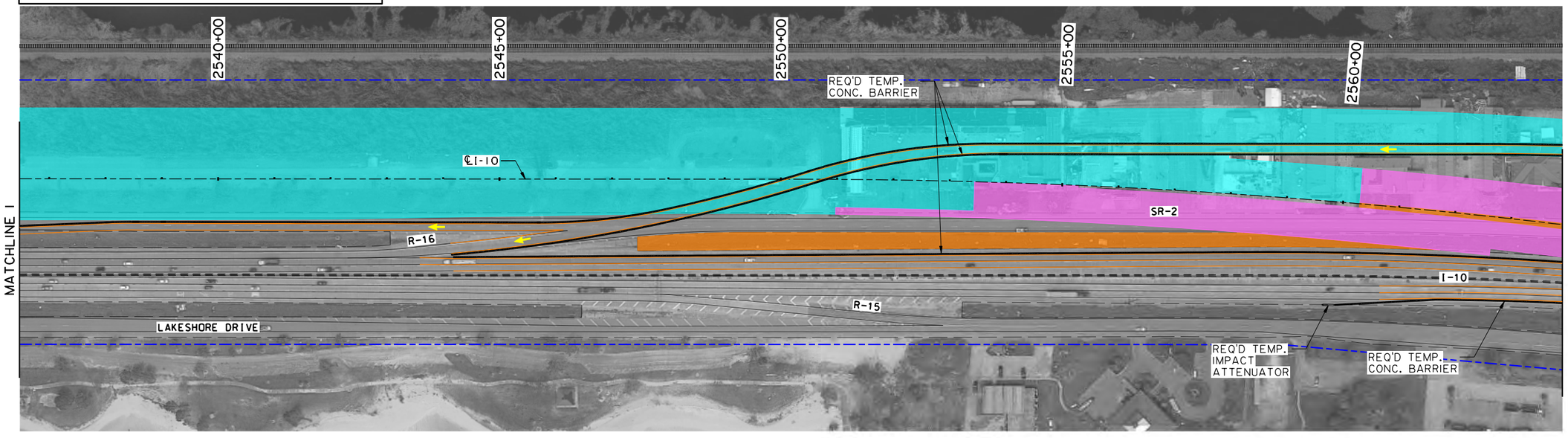

SHEET NUMBER 55

PARISH	CONTROL SECTION	STATE PROJECT
CALCASIEU	450-91	H.003931

DESIGN	G. McCALL	DETAIL	M.HELMINGER	REVIEW
CHECK	M.HELMINGER	CHECK	G. McCALL	SERIES = 5 OF 7

TECHNICAL PROPOSAL PLANS

PRELIMINARY
NOT FOR CONSTRUCTION

ENGINEER:
GLENN McCALL

LICENSE #:
29639

DATE:
5/25/2023

NO.	DATE	REVISION OR CHANGE ORDER DESCRIPTION	BY

SUGGESTED SEQUENCE OF CONSTRUCTION

PHASE 3

I-10 CALCASIEU RIVER BRIDGE P3

DOTD LOUISIANA DEPARTMENT OF TRANSPORTATION & DEVELOPMENT

CBP

S:\xdrive\HUVAL Projects\7262 (I-10 Calcasieu P3)\05 Drawings\Roadway\Border to Print\XX_MOT_Phase 3.dgn 5/25/2023 2:27:00 PM

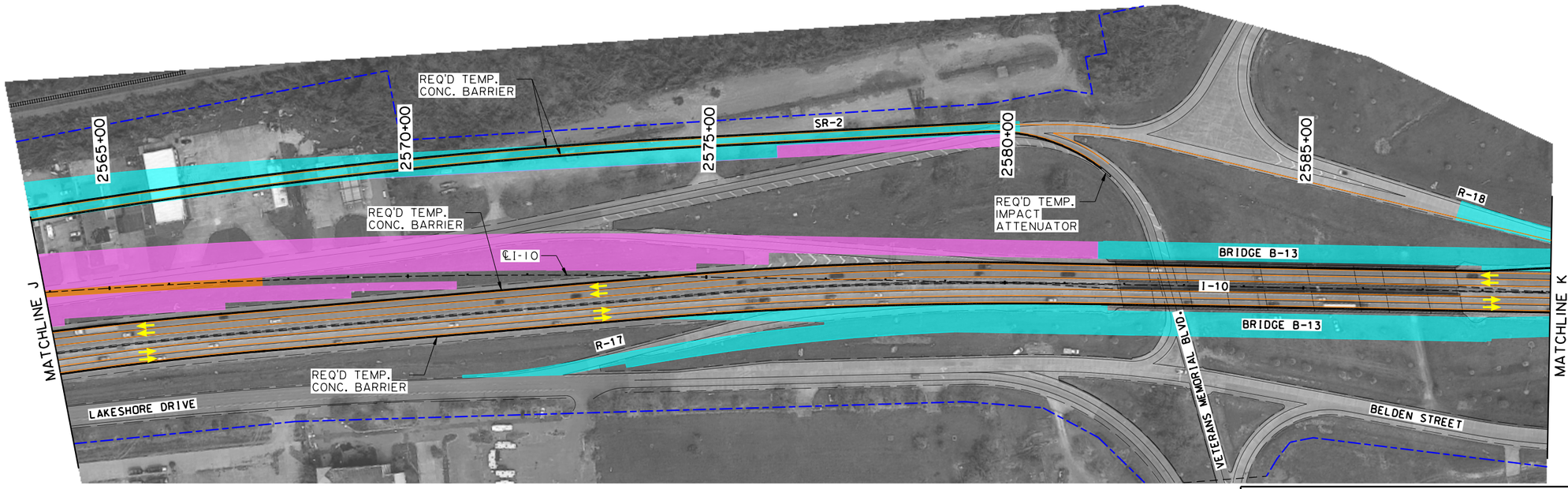

LEGEND

- EXIST. LANE LINE/SHOULDER
- SHIFTED TEMPORARY LANE LINE/SHOULDER
- EXIST. OR REQ'D R/W
- DESIGN BUILD LIMITS
- TEMPORARY CONCRETE BARRIERS
- CONSTRUCTION THIS PHASE
- CONSTRUCTED PREVIOUS PHASE
- REQ'D TEMPORARY PAVEMENT
- REQ'D MILL & OVERLAY
- DIRECTION OF TRAVEL & NUMBER OF LANES

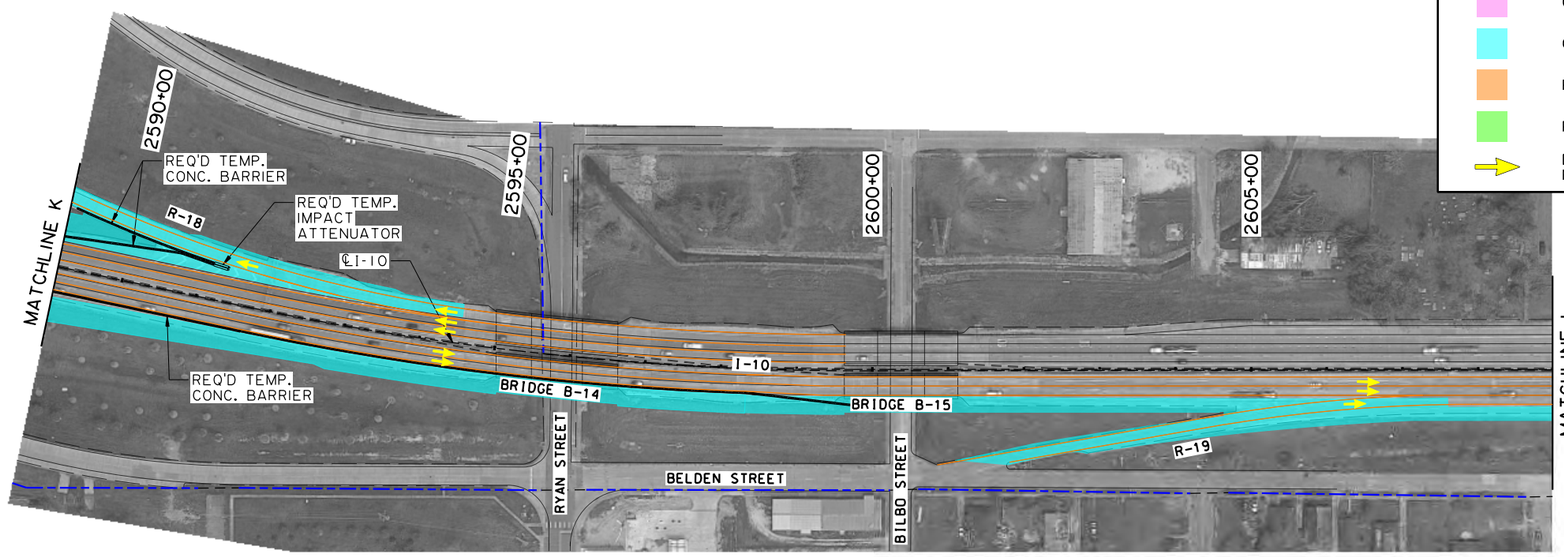

SHEET NUMBER 56

PARISH	CONTROL SECTION	STATE PROJECT
CALCASIEU	450-91	H.003931

DESIGN	CHECK	DETAIL	CHECK	REVIEW	SERIES #
G. McCALL	M.HELMINGER	M.HELMINGER	G. McCALL		6 OF 7

TECHNICAL PROPOSAL PLANS

PRELIMINARY
NOT FOR CONSTRUCTION

ENGINEER: GLENN McCALL

LICENSE #: 29639

DATE: 5/25/2023

NO.	DATE	REVISION OR CHANGE ORDER DESCRIPTION	BY

STATE OF LOUISIANA

SUGGESTED SEQUENCE OF CONSTRUCTION

PHASE 3

I-10 CALCASIEU RIVER BRIDGE P3

DOTD
LOUISIANA DEPARTMENT OF TRANSPORTATION & DEVELOPMENT

CBP

TECHNICAL PROPOSAL PLANS
S:\xdrive\HUVAL Projects\7262 (I-10 Calcasieu P3)\05 Drawings\Roadway\Border to Print\XX_MOT_Phase 3.dgn 5/25/2023 2:27:02 PM

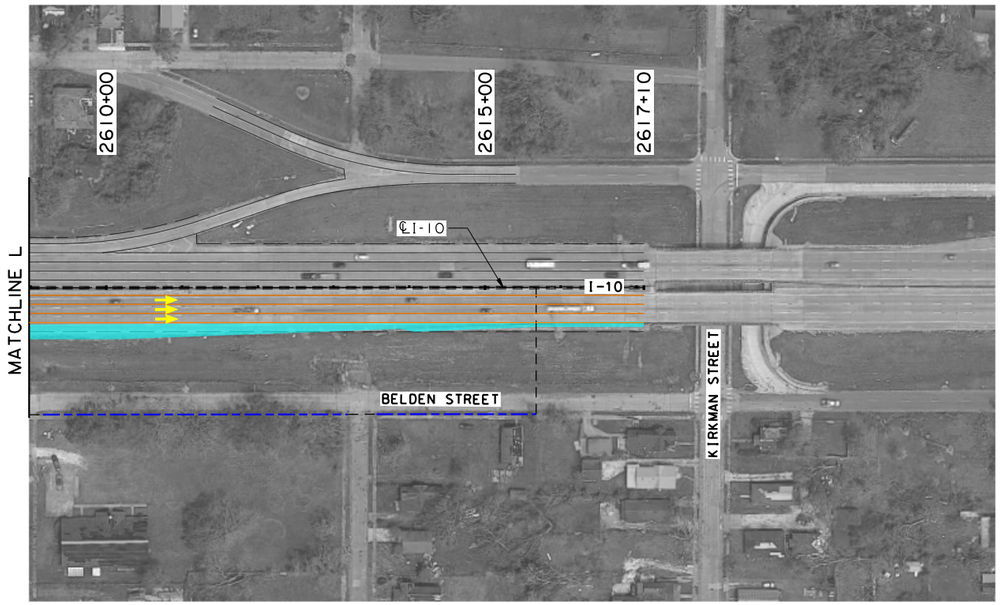

N

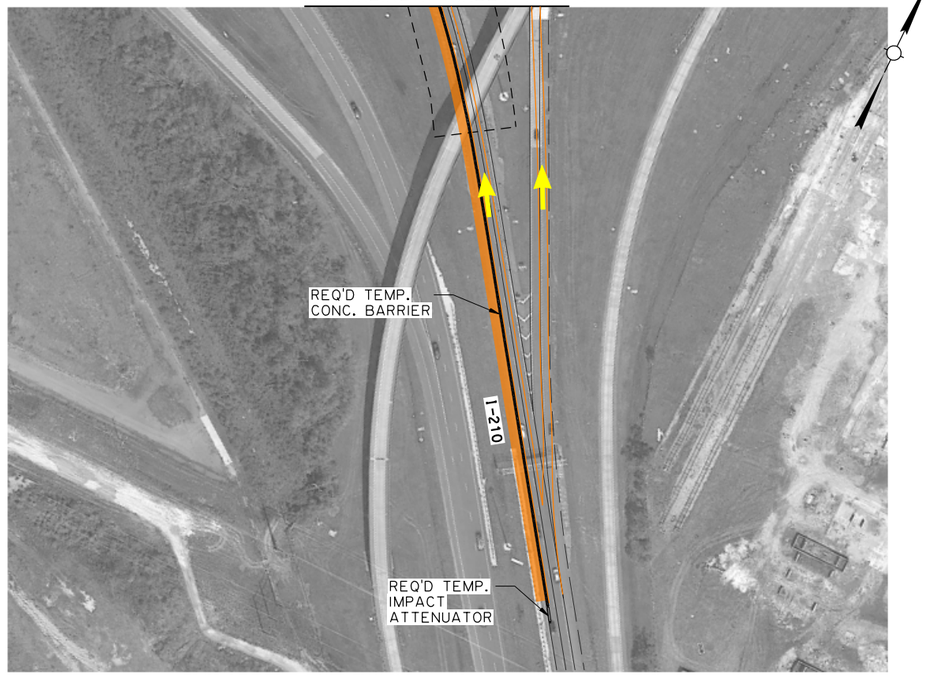

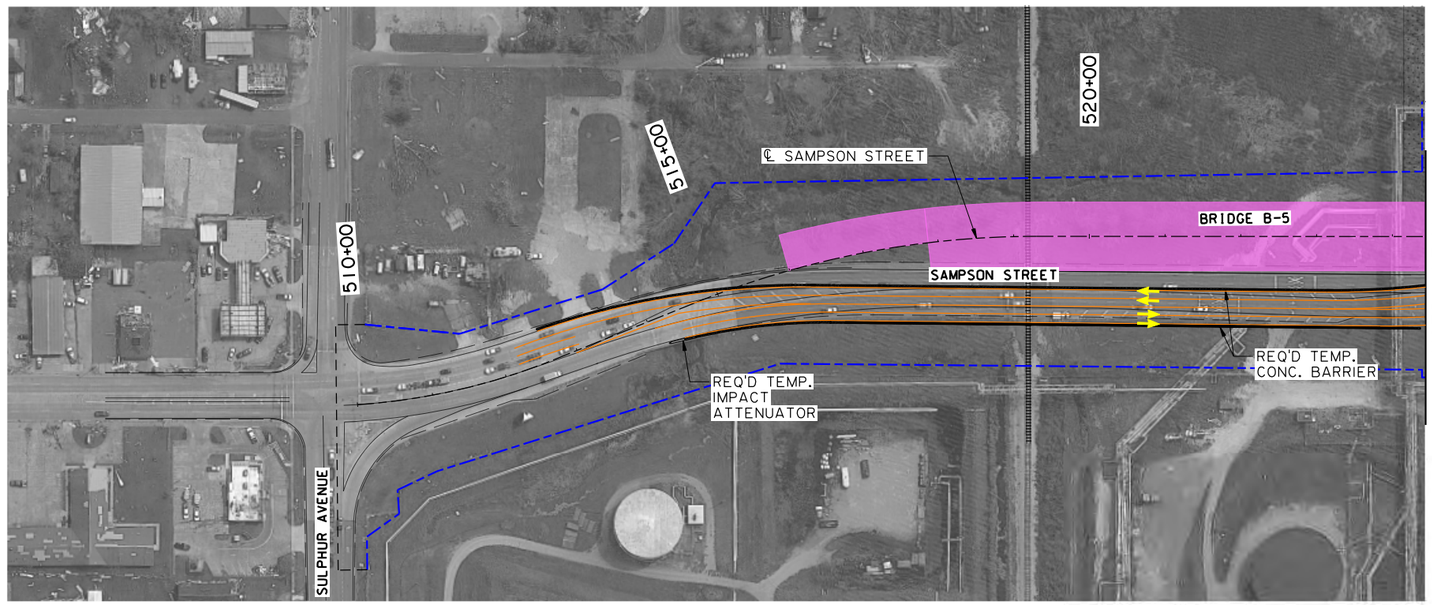

N

LEGEND

- EXIST. LANE LINE/SHOULDER
- SHIFTED TEMPORARY LANE LINE/SHOULDER
- EXIST. OR REQ'D R/W
- DESIGN BUILD LIMITS
- TEMPORARY CONCRETE BARRIERS
- CONSTRUCTION THIS PHASE
- CONSTRUCTED PREVIOUS PHASE
- REQ'D TEMPORARY PAVEMENT
- REQ'D MILL & OVERLAY
- DIRECTION OF TRAVEL & NUMBER OF LANES

SHEET NUMBER 57

PARISH	CONTROL SECTION	STATE PROJECT
CALCASIEU	450-91	H.003931

DESIGN	G. McCALL	DETAIL	M.HELLMINGER	
CHECK	M.HELLMINGER	CHECK	G. McCALL	
REVIEW		SERIES #	7 OF 7	

TECHNICAL PROPOSAL PLANS

PRELIMINARY
NOT FOR CONSTRUCTION

ENGINEER:
GLENN McCALL

LICENSE #:
29639

DATE:
5/25/2023

NO.	DATE	REVISION OR CHANGE ORDER DESCRIPTION	BY

SUGGESTED SEQUENCE OF CONSTRUCTION
PHASE 3

I-10 CALCASIEU RIVER BRIDGE P3

DOTD LOUISIANA DEPARTMENT OF TRANSPORTATION & DEVELOPMENT

CBP CALCASIEU BRIDGE PARTNERS

TECHNICAL PROPOSAL PLANS
S:\xdrive\HUVAL Projects\7262 (I-10 Calcasieu P3)\05 Drawings\Roadway\Border to Print\XX_MOT_Phase 4.dgn 5/25/2023 2:27:05 PM

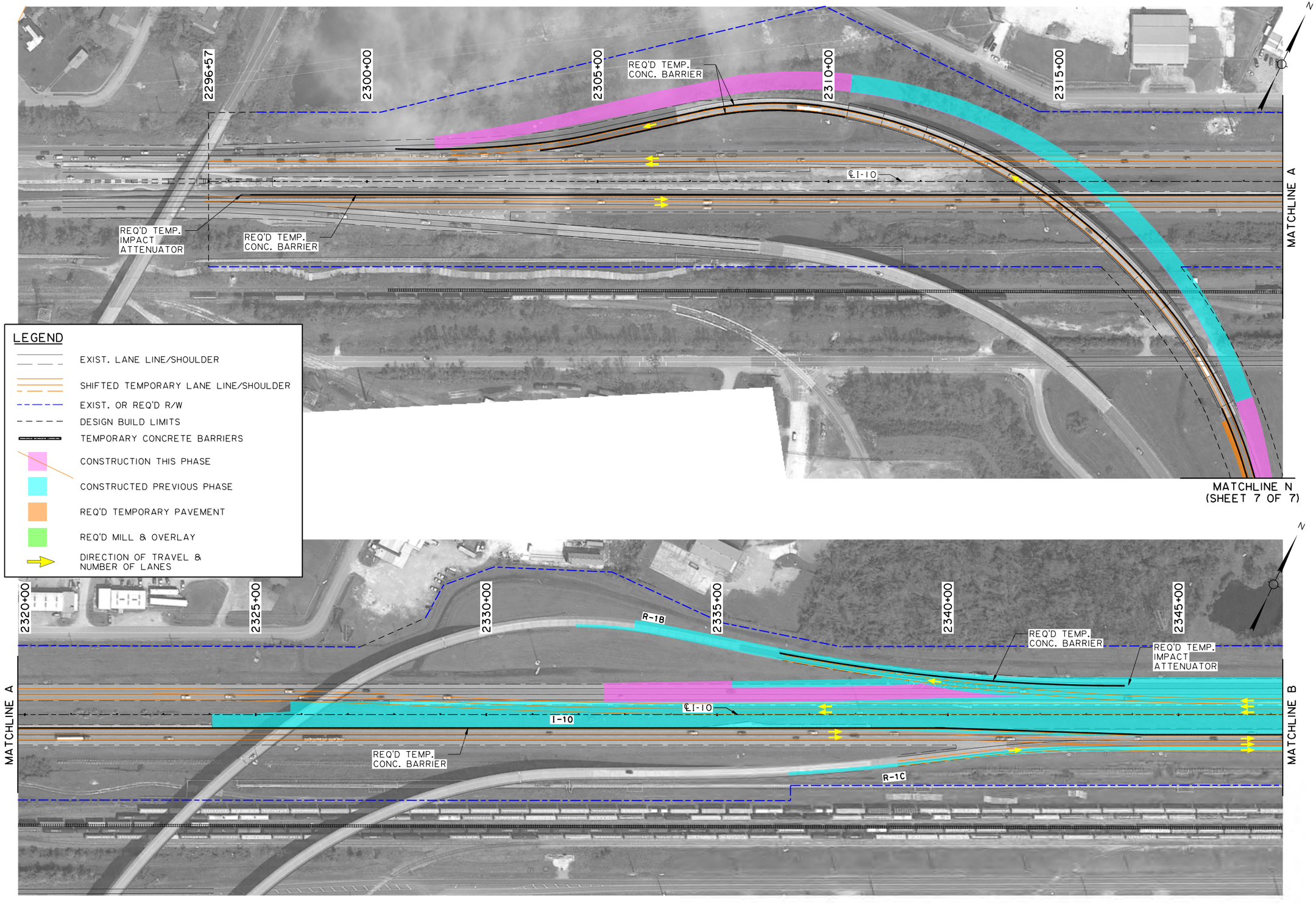

SUGGESTED SEQUENCE OF CONSTRUCTION
PHASE 4

I-10 CALCASIEU RIVER BRIDGE P3

SHEET NUMBER	58

PARISH	CONTROL SECTION	STATE PROJECT
CALCASIEU	450-91	H.003931

DESIGN	G. McCALL	DETAIL	M.HELMINGER	REVIEW	SERIES = 1 OF 7
CHECK	M.HELMINGER	CHECK	G. McCALL		

TECHNICAL PROPOSAL PLANS
PRELIMINARY
NOT FOR CONSTRUCTION
ENGINEER:
GLENN McCALL
LICENSE #:
29639
DATE:
5/25/2023

NO.	DATE	REVISION OR CHANGE ORDER DESCRIPTION	BY

S:\xdrive\HUVAL Projects\7262 (I-10 Calcasieu P3)\05 Drawings\Roadway\Border to Print\VX_MOT_Phase 4.dgn
5/25/2023 2:27:08 PM

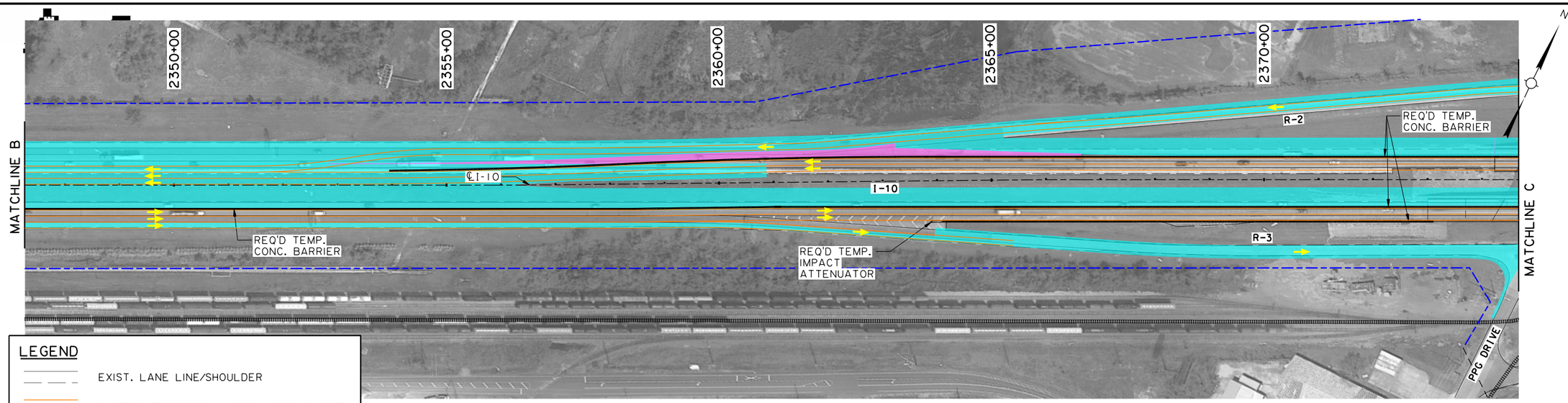

LEGEND

- EXIST. LANE LINE/SHOULDER
- SHIFTED TEMPORARY LANE LINE/SHOULDER
- EXIST. OR REQ'D R/W
- DESIGN BUILD LIMITS
- TEMPORARY CONCRETE BARRIERS
- CONSTRUCTION THIS PHASE
- CONSTRUCTED PREVIOUS PHASE
- REQ'D TEMPORARY PAVEMENT
- REQ'D MILL & OVERLAY
- DIRECTION OF TRAVEL & NUMBER OF LANES

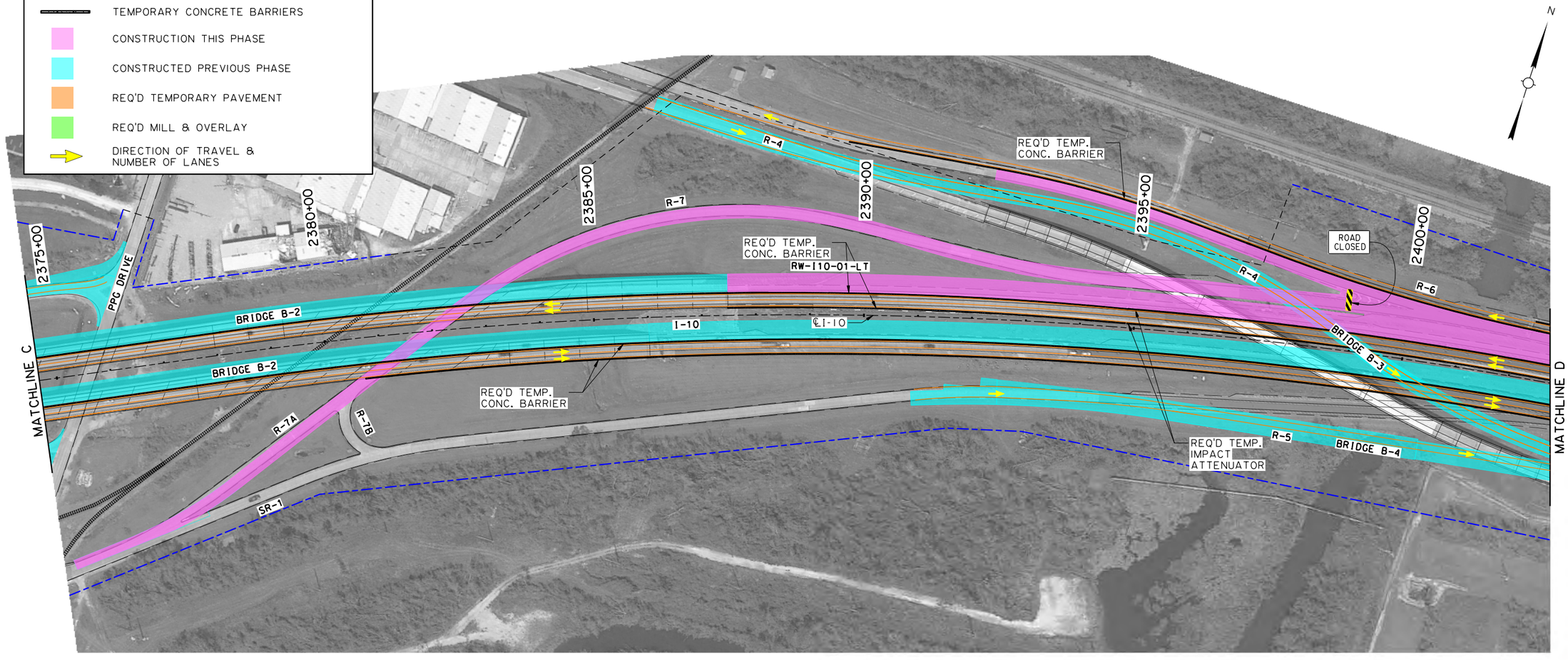

SUGGESTED SEQUENCE OF CONSTRUCTION
PHASE 4

I-10 CALCASIEU RIVER BRIDGE P3

SHEET NUMBER	59

PARISH	CONTROL SECTION	STATE PROJECT
CALCASIEU	450-91	H.003931

	DESIGN	CHECK	DETAIL	CHECK	REVIEW	SERIES #
	G. McCALL	M.HELMINGER	M.HELMINGER	G. McCALL		2 OF 7

TECHNICAL PROPOSAL PLANS

PRELIMINARY
NOT FOR CONSTRUCTION

ENGINEER:
GLENN McCALL

LICENSE #:
29639

DATE:
5/25/2023

NO.	DATE	REVISION OR CHANGE ORDER DESCRIPTION	BY

STATE OF LOUISIANA DEPARTMENT OF TRANSPORTATION AND DEVELOPMENT

DOTD LOUISIANA DEPARTMENT OF TRANSPORTATION & DEVELOPMENT

CBP

S:\xdrive\HUVAL Projects\7262 (I-10 Calcasieu P3)\05 Drawings\Roadway\Border to Print\XX_MOT_Phase 4.dgn 5/25/2023 2:27:13 PM

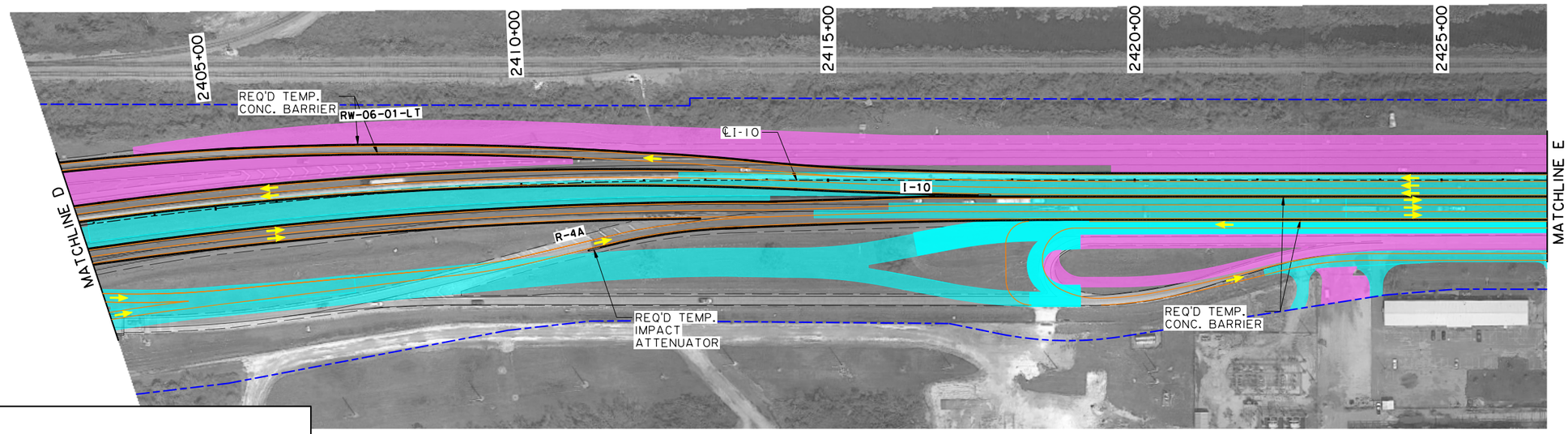

N

LEGEND

- EXIST. LANE LINE/SHOULDER
- SHIFTED TEMPORARY LANE LINE/SHOULDER
- EXIST. OR REQ'D R/W
- DESIGN BUILD LIMITS
- TEMPORARY CONCRETE BARRIERS
- CONSTRUCTION THIS PHASE
- CONSTRUCTED PREVIOUS PHASE
- REQ'D TEMPORARY PAVEMENT
- REQ'D MILL & OVERLAY
- DIRECTION OF TRAVEL & NUMBER OF LANES

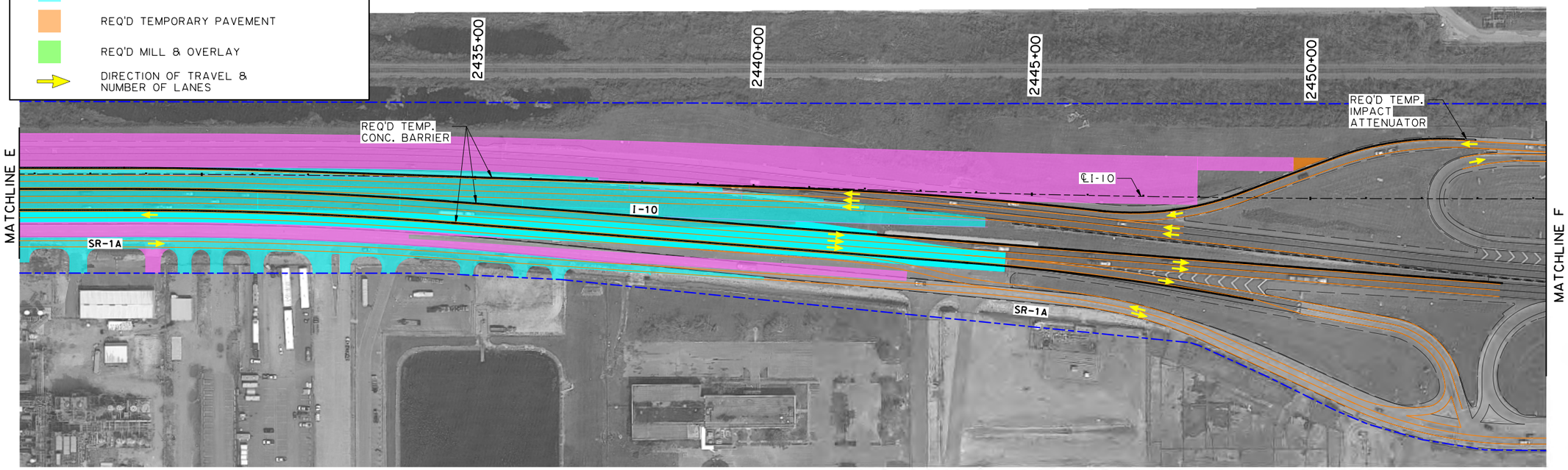

N

SHEET NUMBER 60

PARISH	CONTROL SECTION	STATE PROJECT
CALCASIEU	450-91	H.003931

	DESIGN	CHECK	DETAIL	CHECK	REVIEW	SERIES
	G. McCALL	M.HELLMINGER	M.HELLMINGER	G. McCALL		3 OF 7

TECHNICAL PROPOSAL PLANS

PRELIMINARY
NOT FOR CONSTRUCTION

ENGINEER:
GLENN McCALL

LICENSE #:
29639

DATE:
5/25/2023

NO.	DATE	REVISION OR CHANGE ORDER DESCRIPTION	BY

SUGGESTED SEQUENCE OF CONSTRUCTION
PHASE 4

I-10 CALCASIEU RIVER BRIDGE P3

DOTD LOUISIANA DEPARTMENT OF TRANSPORTATION & DEVELOPMENT

CBP

MATCHLINE M (SHEET 7 OF 7)

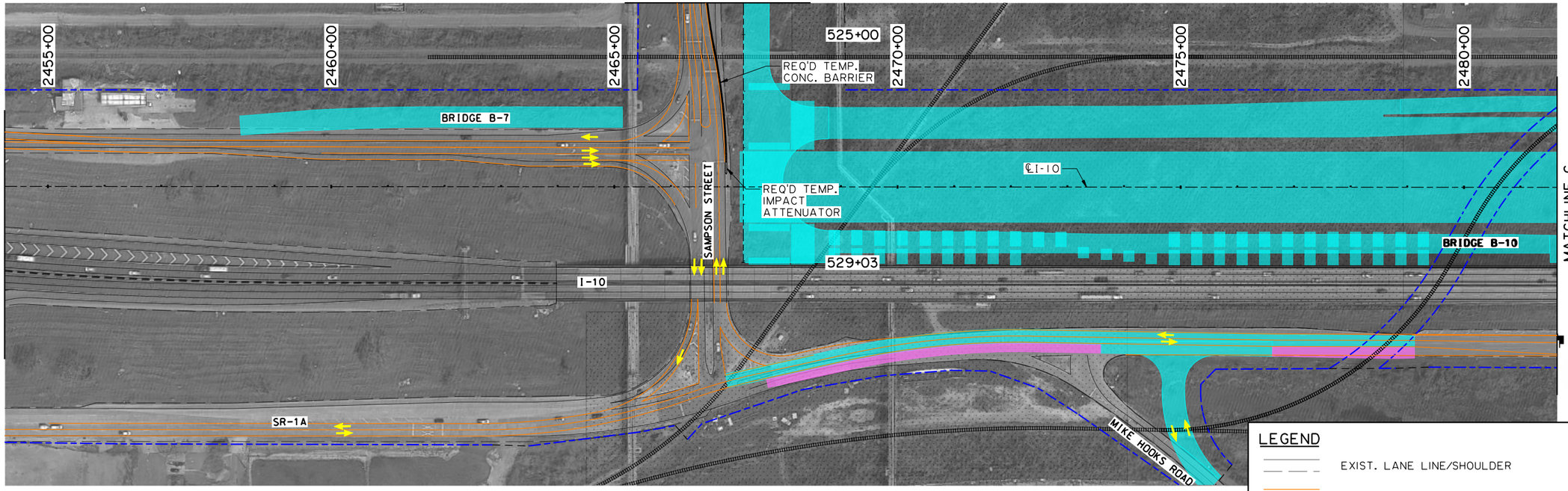

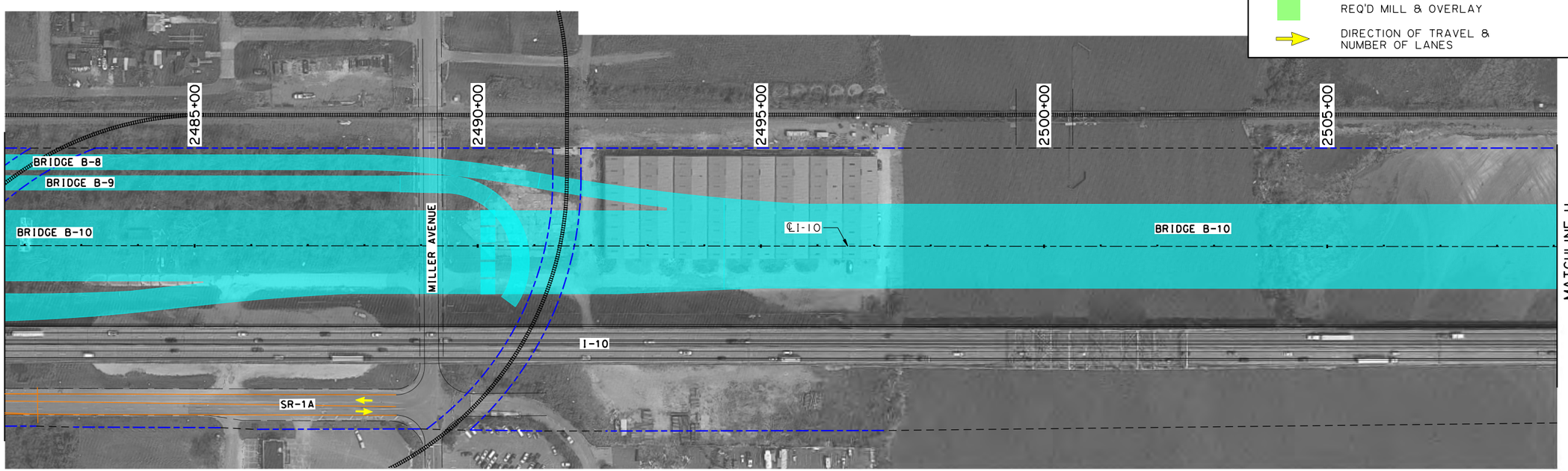

LEGEND

- EXIST. LANE LINE/SHOULDER
- SHIFTED TEMPORARY LANE LINE/SHOULDER
- EXIST. OR REQ'D R/W
- DESIGN BUILD LIMITS
- TEMPORARY CONCRETE BARRIERS
- CONSTRUCTION THIS PHASE
- CONSTRUCTED PREVIOUS PHASE
- REQ'D TEMPORARY PAVEMENT
- REQ'D MILL & OVERLAY
- DIRECTION OF TRAVEL & NUMBER OF LANES

SUGGESTED SEQUENCE OF CONSTRUCTION
PHASE 4

I-10 CALCASIEU RIVER BRIDGE P3

SHEET NUMBER	61
PARISH	CALCASIEU
CONTROL SECTION	450-91
STATE PROJECT	H.003931

DESIGN	G. McCALL
CHECK	M.HELMINGER
DETAIL	M.HELMINGER
CHECK	G. McCALL
REVIEW	
SERIES	4 OF 7

TECHNICAL PROPOSAL PLANS
PRELIMINARY
NOT FOR CONSTRUCTION
ENGINEER:
GLENN McCALL
LICENSE #:
29639
DATE:
5/25/2023

NO.	DATE	REVISION OR CHANGE ORDER DESCRIPTION	BY

LOUISIANA DEPARTMENT OF TRANSPORTATION & DEVELOPMENT

CBP COLORADO BRIDGE PARTNER

TECHNICAL PROPOSAL PLANS

5/25/2023 2:27:16 PM

S:\xdrive\HUVAL Projects\7262 (I-10 Calcasieu P3)\05 Drawings\Roadway\Border to Print\XX_MOT_Phase 4.dgn

TECHNICAL PROPOSAL PLANS
S:\xdrive\HUVAL Projects\7262 (I-10 Calcasieu P3)\05 Drawings\Roadway\Border to Print\XX_MOT_Phase 4.dgn
5/25/2023 2:27:19 PM

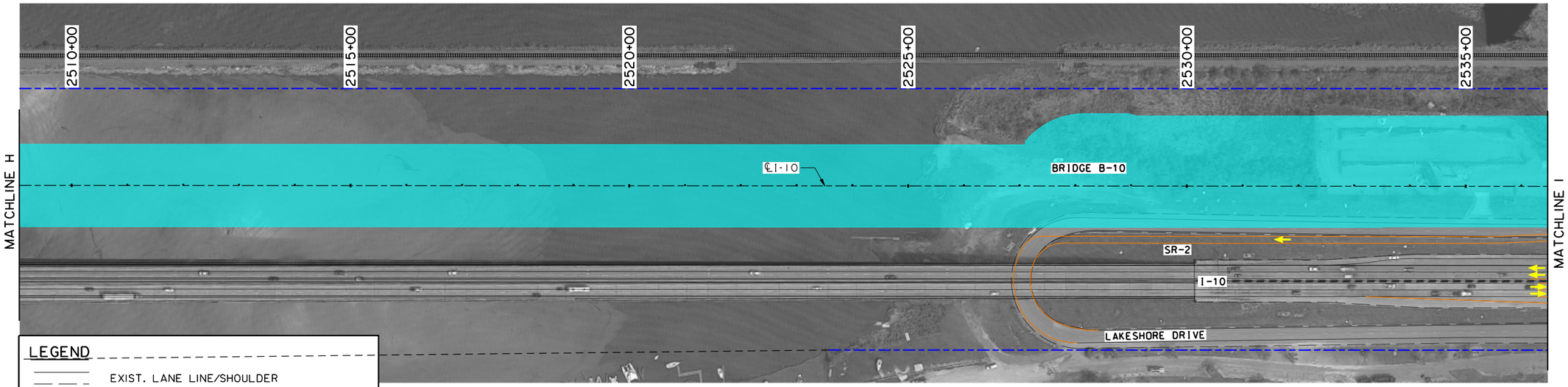

LEGEND

- EXIST. LANE LINE/SHOULDER
- SHIFTED TEMPORARY LANE LINE/SHOULDER
- EXIST. OR REQ'D R/W
- DESIGN BUILD LIMITS
- TEMPORARY CONCRETE BARRIERS
- CONSTRUCTION THIS PHASE
- CONSTRUCTED PREVIOUS PHASE
- REQ'D TEMPORARY PAVEMENT
- REQ'D MILL & OVERLAY
- DIRECTION OF TRAVEL & NUMBER OF LANES

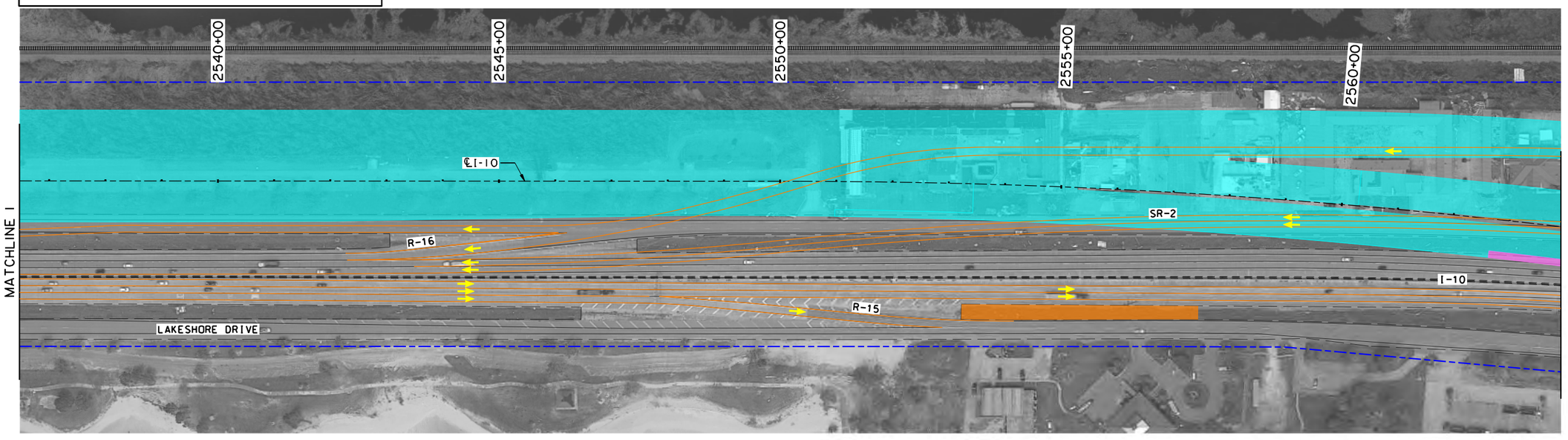

SHEET NUMBER 62

PARISH	CONTROL SECTION	STATE PROJECT
CALCASIEU	450-91	H.003931

DESIGN	G. McCALL	DETAIL	M.HELMINGER	REVIEW	SERIES # 5 OF 7
CHECK	M.HELMINGER	CHECK	G. McCALL		

TECHNICAL PROPOSAL PLANS

PRELIMINARY
NOT FOR CONSTRUCTION

ENGINEER:
GLENN McCALL

LICENSE #:
29639

DATE:
5/25/2023

NO.	DATE	REVISION OR CHANGE ORDER DESCRIPTION	BY

SUGGESTED SEQUENCE OF CONSTRUCTION

PHASE 4

I-10 CALCASIEU RIVER BRIDGE P3

DOTD LOUISIANA DEPARTMENT OF TRANSPORTATION & DEVELOPMENT

CBP

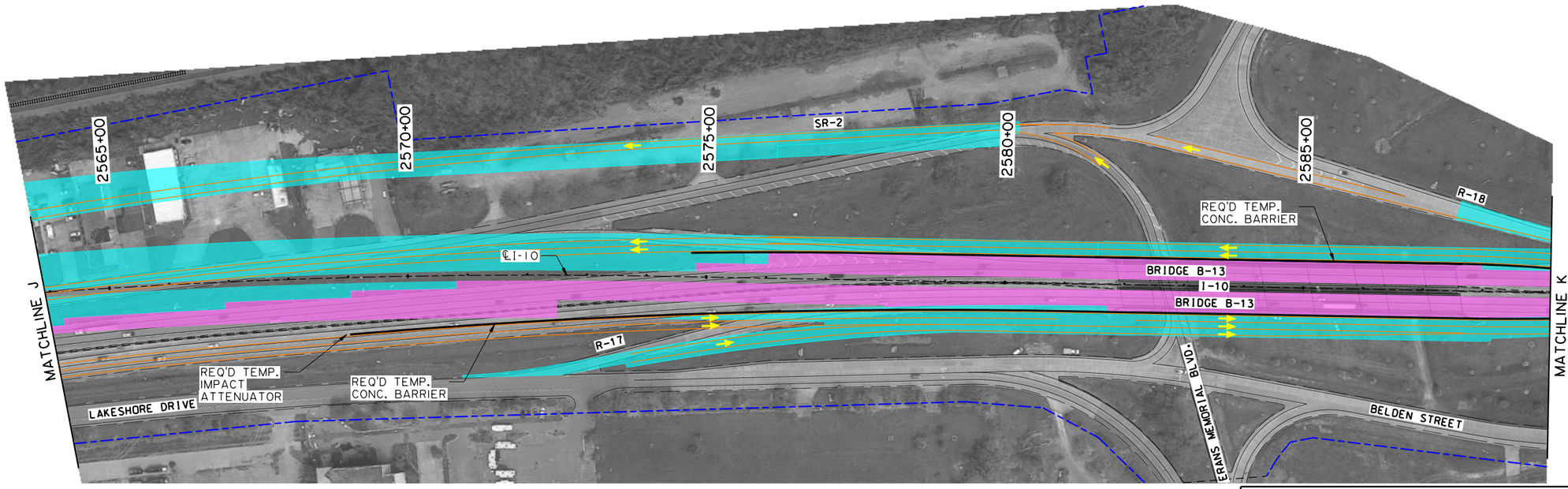

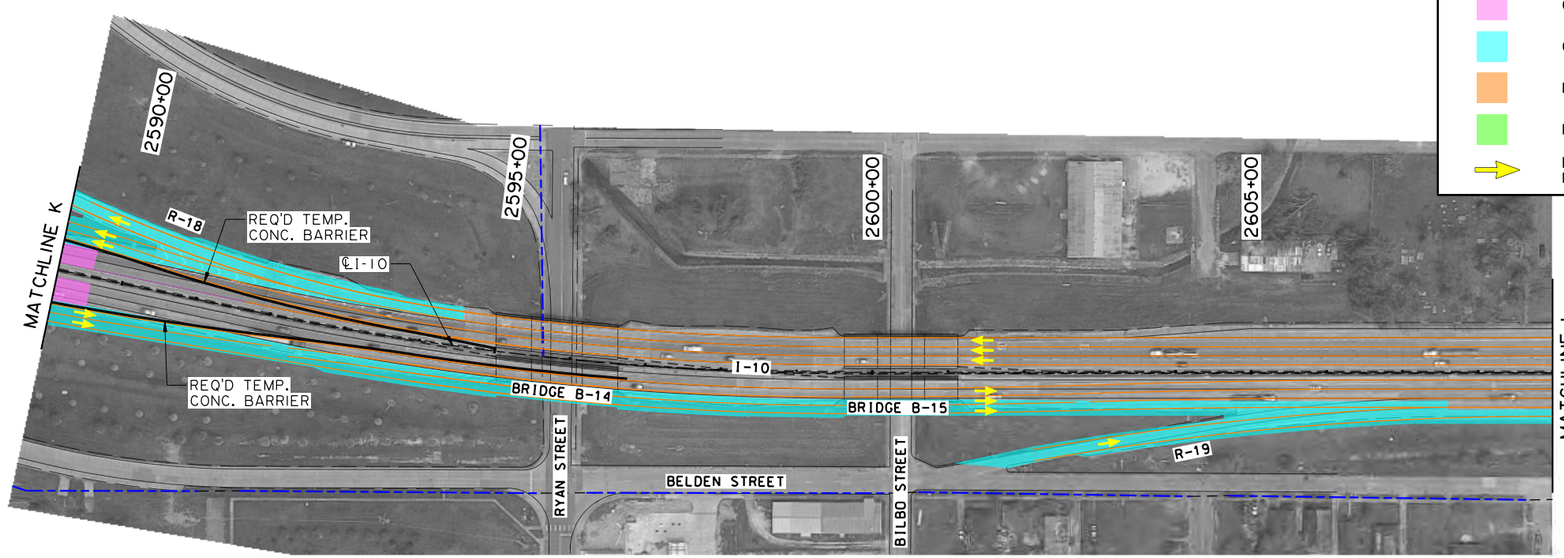

N

N

LEGEND

- EXIST. LANE LINE/SHOULDER
- SHIFTED TEMPORARY LANE LINE/SHOULDER
- EXIST. OR REQ'D R/W
- DESIGN BUILD LIMITS
- TEMPORARY CONCRETE BARRIERS
- CONSTRUCTION THIS PHASE
- CONSTRUCTED PREVIOUS PHASE
- REQ'D TEMPORARY PAVEMENT
- REQ'D MILL & OVERLAY
- DIRECTION OF TRAVEL & NUMBER OF LANES

SUGGESTED SEQUENCE OF CONSTRUCTION

PHASE 4

I-10 CALCASIEU RIVER BRIDGE P3

SHEET NUMBER	63
PARISH	CALCASIEU
CONTROL SECTION	450-91
STATE PROJECT	H.003393 I

DESIGN	G. McCALL	DETAIL	M.HELLMINGER	REVIEW	SERIES # 6 OF 7
CHECK	M.HELLMINGER	CHECK	G. McCALL		

TECHNICAL PROPOSAL PLANS

PRELIMINARY
NOT FOR CONSTRUCTION

ENGINEER:
GLENN McCALL

LICENSE #:
29639

DATE:
5/25/2023

NO.	DATE	REVISION OR CHANGE ORDER DESCRIPTION	BY

LOUISIANA DEPARTMENT OF TRANSPORTATION & DEVELOPMENT

CBP CALCASIEU BRIDGE PARTNERS

TECHNICAL PROPOSAL PLANS

S:\xdrive\HUVAL Projects\7262 (I-10 Calcasieu P3)\05 Drawings\Roadway\Border to Print\XX_MOT_Phase 4.dgn 5/25/2023 2:27:21 PM

S:\xdrive\HUVAL Projects\7262 (I-10 Calcasieu P3)\05 Drawings\Roadway\Border to Print\XX_MOT_Phase 4.dgn
5/25/2023 2:27:23 PM

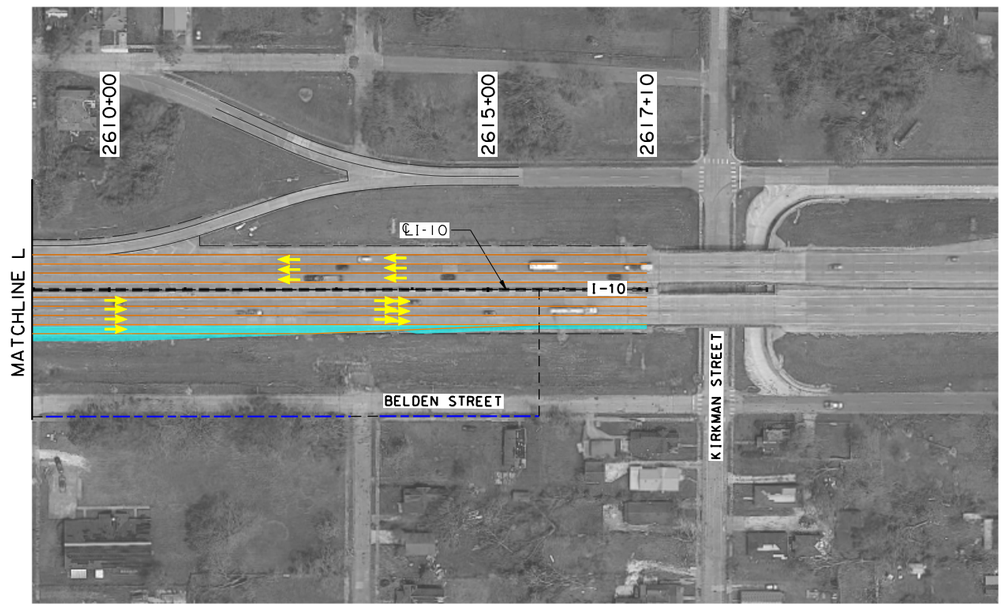

N



N

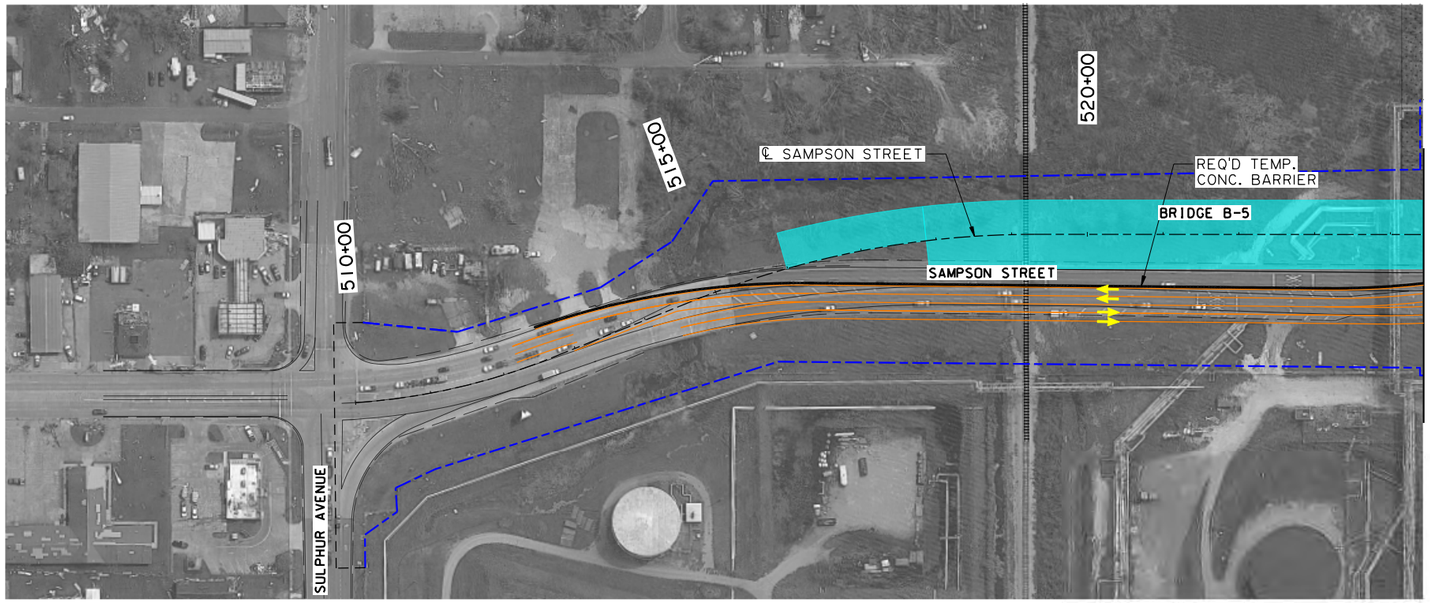

LEGEND

- EXIST. LANE LINE/SHOULDER
- SHIFTED TEMPORARY LANE LINE/SHOULDER
- EXIST. OR REQ'D R/W
- DESIGN BUILD LIMITS
- TEMPORARY CONCRETE BARRIERS
- CONSTRUCTION THIS PHASE
- CONSTRUCTED PREVIOUS PHASE
- REQ'D TEMPORARY PAVEMENT
- REQ'D MILL & OVERLAY
- DIRECTION OF TRAVEL & NUMBER OF LANES

SHEET NUMBER 64

PARISH	CONTROL SECTION	STATE PROJECT
CALCASIEU	450-91	H.003931

DESIGN	G. McCALL
CHECK	M.HELLMINGER
DETAIL	M.HELLMINGER
CHECK	G. McCALL
REVIEW	
SERIES #	7 OF 7

TECHNICAL PROPOSAL PLANS

PRELIMINARY
NOT FOR CONSTRUCTION

ENGINEER:
GLENN McCALL

LICENSE #:
29639

DATE:
5/25/2023

NO.	DATE	REVISION OR CHANGE ORDER DESCRIPTION	BY

SUGGESTED SEQUENCE OF CONSTRUCTION
PHASE 4

I-10 CALCASIEU RIVER BRIDGE P3

TECHNICAL PROPOSAL PLANS
S:\xdrive\HUVAL Projects\7262 (I-10 Calcasieu P3)\05 Drawings\Roadway\Border to Print\XX_MOT_Phase 5.dgn
5/25/2023 2:27:26 PM

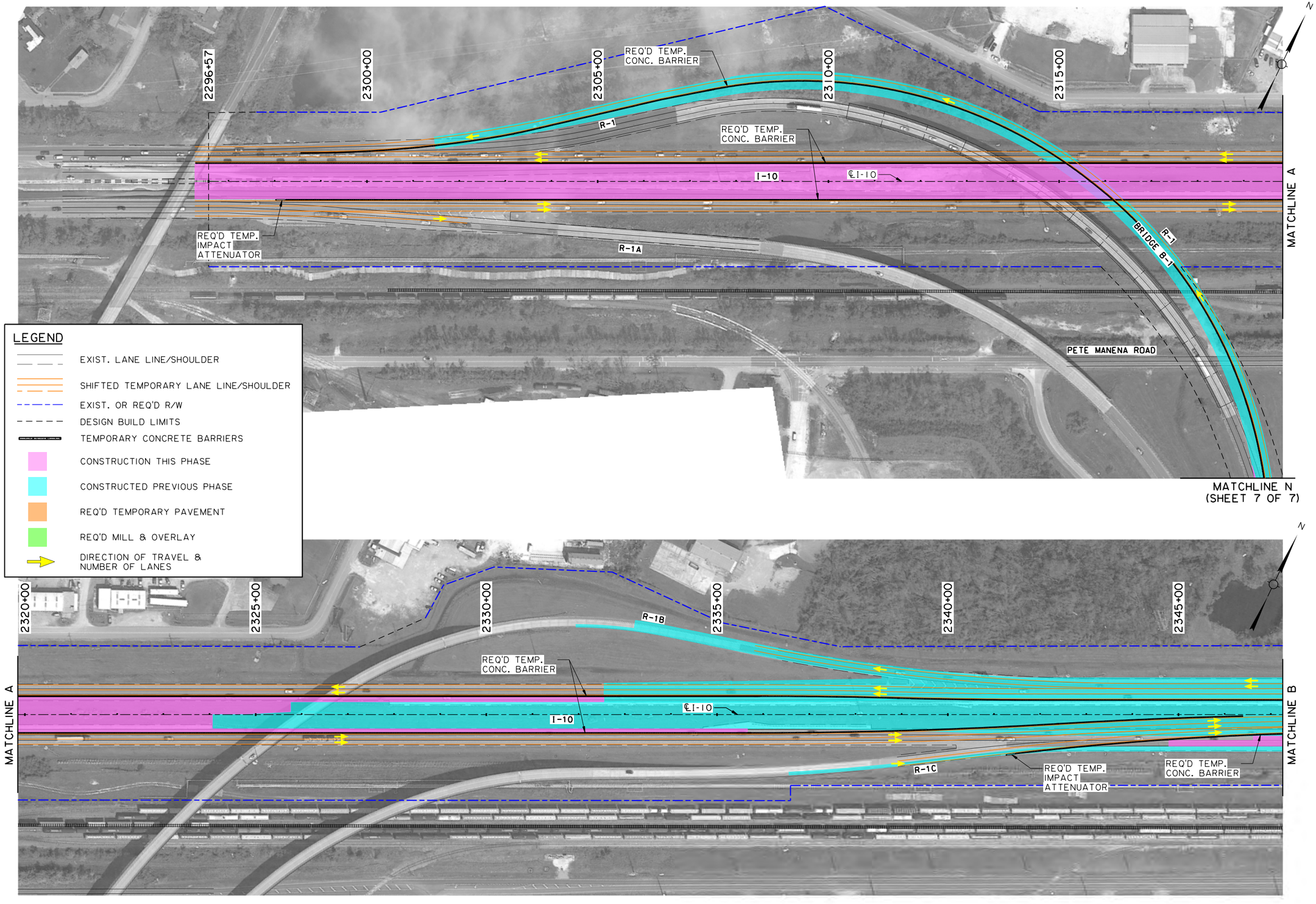

SUGGESTED SEQUENCE OF CONSTRUCTION
PHASE 5

I-10 CALCASIEU RIVER BRIDGE P3

SHEET NUMBER	65

PARISH	CONTROL SECTION	STATE PROJECT
CALCASIEU	450-91	H.003931

DESIGN	G. McCALL	DETAIL	M.HELMINGER	REVIEW	SERIES # 1 OF 7
CHECK	M.HELMINGER	CHECK	G. McCALL		

TECHNICAL PROPOSAL PLANS
PRELIMINARY
NOT FOR CONSTRUCTION
ENGINEER:
GLENN McCALL
LICENSE #:
29639
DATE:
5/25/2023

NO.	DATE	REVISION OR CHANGE ORDER DESCRIPTION	BY

S:\xdrive\HUVAL Projects\7262 (I-10 Calcasieu P3)\05 Drawings\Roadway\Border to Print\XX_MOT_Phase 5.dgn
5/25/2023 2:27:29 PM

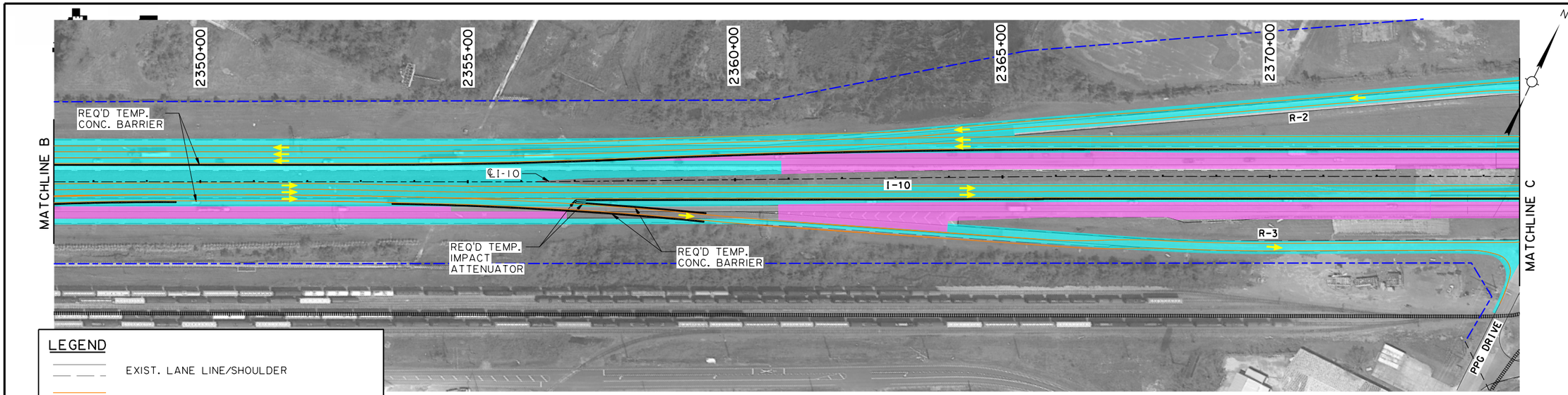

LEGEND

- EXIST. LANE LINE/SHOULDER
- SHIFTED TEMPORARY LANE LINE/SHOULDER
- EXIST. OR REQ'D R/W
- DESIGN BUILD LIMITS
- TEMPORARY CONCRETE BARRIERS
- CONSTRUCTION THIS PHASE
- CONSTRUCTED PREVIOUS PHASE
- REQ'D TEMPORARY PAVEMENT
- REQ'D MILL & OVERLAY
- DIRECTION OF TRAVEL & NUMBER OF LANES

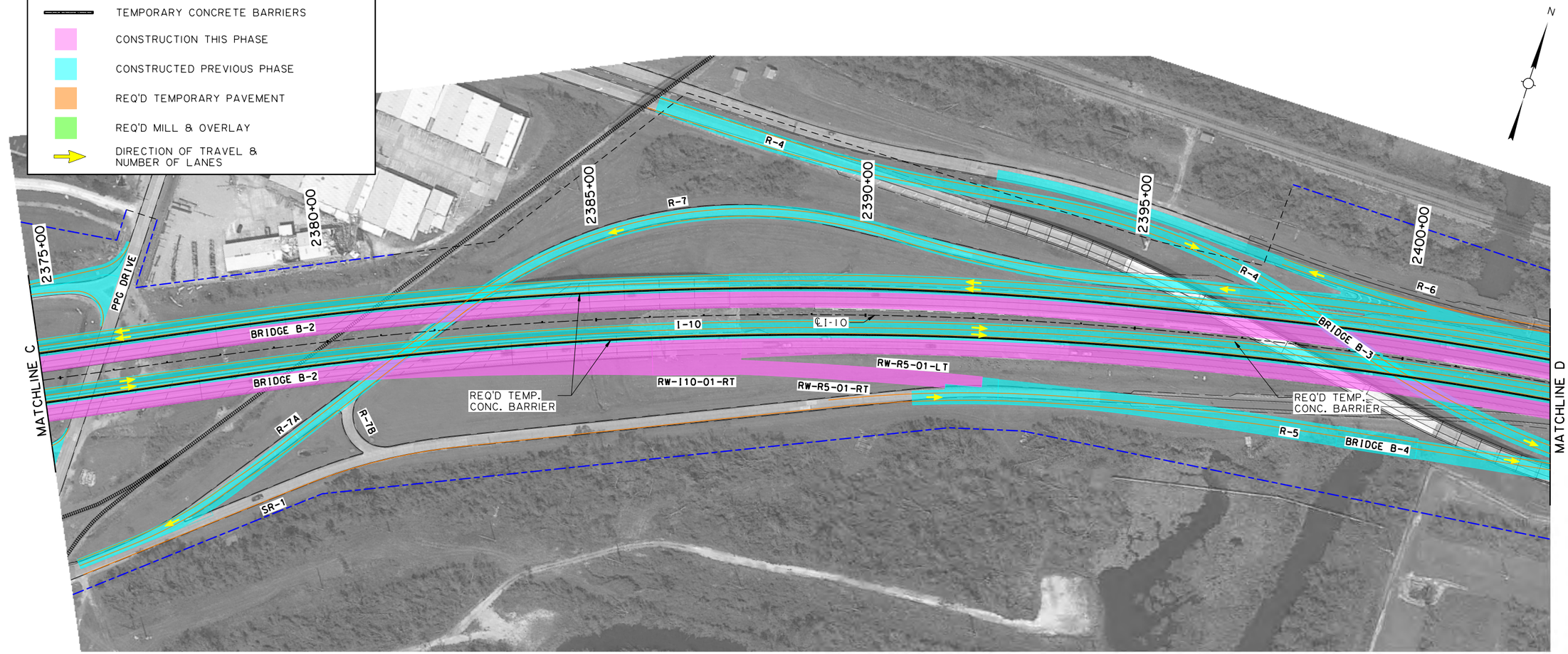

SHEET NUMBER	66

PARISH	CONTROL SECTION	STATE PROJECT
CALCASIEU	450-91	H.003931

DESIGN	CHECK	DETAIL	CHECK	REVIEW	SERIES #
G. McCALL	M.HELMINGER	M.HELMINGER	G. McCALL		2 OF 7

TECHNICAL PROPOSAL PLANS

PRELIMINARY
NOT FOR CONSTRUCTION

ENGINEER:
GLENN McCALL

LICENSE #:
29639

DATE:
5/25/2023

NO.	DATE	REVISION OR CHANGE ORDER DESCRIPTION	BY

SUGGESTED SEQUENCE OF CONSTRUCTION
PHASE 5

I-10 CALCASIEU RIVER BRIDGE P3

S:\xdrive\HUVAL Projects\7262 (I-10 Calcasieu P3)\05 Drawings\Roadway\Border to Print\XX_MOT_Phase 5.dgn 5/25/2023 2:27:33 PM

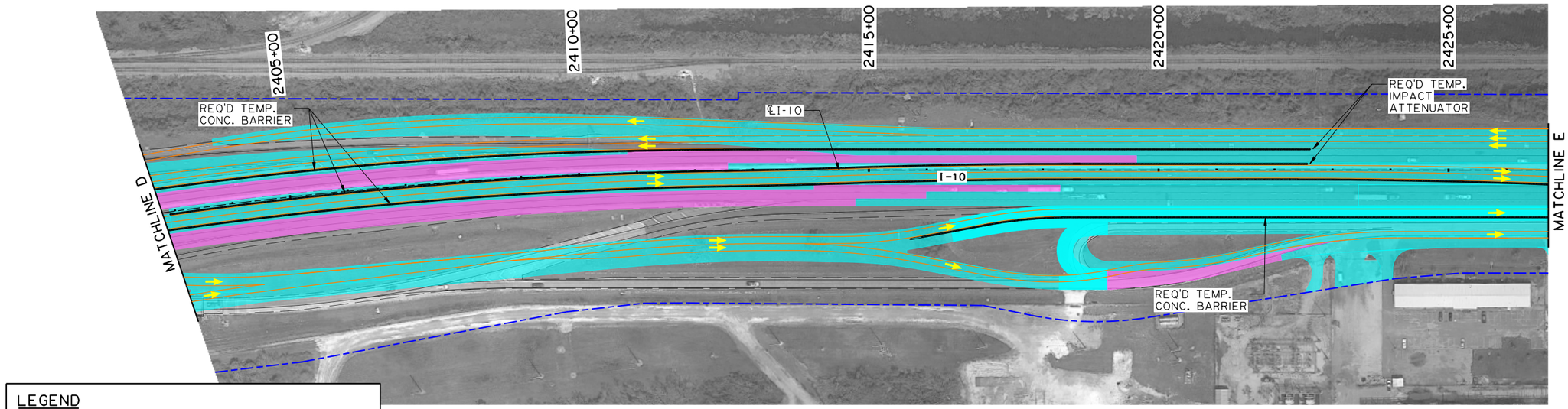

LEGEND

- EXIST. LANE LINE/SHOULDER
- SHIFTED TEMPORARY LANE LINE/SHOULDER
- EXIST. OR REQ'D R/W
- DESIGN BUILD LIMITS
- TEMPORARY CONCRETE BARRIERS
- CONSTRUCTION THIS PHASE
- CONSTRUCTED PREVIOUS PHASE
- REQ'D TEMPORARY PAVEMENT
- REQ'D MILL & OVERLAY
- DIRECTION OF TRAVEL & NUMBER OF LANES

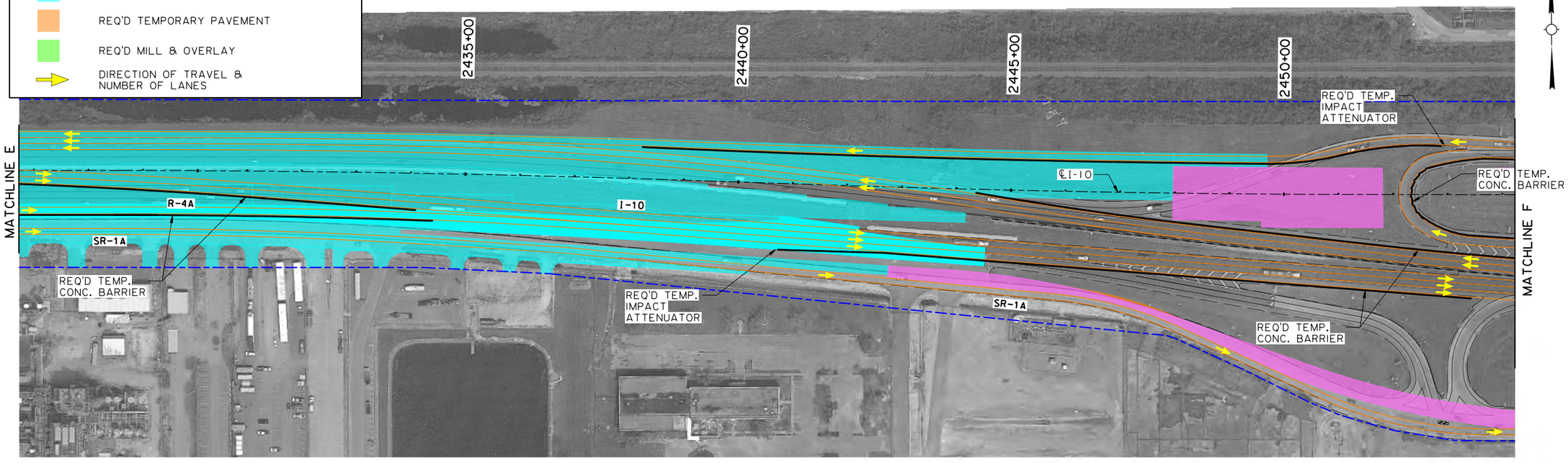

SHEET NUMBER 67

PARISH	CONTROL SECTION	STATE PROJECT
CALCASIEU	450-91	H.003931

	DESIGN	CHECK	DETAIL	CHECK	REVIEW	SERIES
	G. McCALL	M.HELLMINGER	M.HELLMINGER	G. McCALL		3 OF 7

TECHNICAL PROPOSAL PLANS

PRELIMINARY
NOT FOR CONSTRUCTION

ENGINEER:
GLENN McCALL

LICENSE #:
29639

DATE:
5/25/2023

NO.	DATE	REVISION OR CHANGE ORDER DESCRIPTION	BY

STATE OF LOUISIANA — DEPARTMENT OF TRANSPORTATION AND DEVELOPMENT

SUGGESTED SEQUENCE OF CONSTRUCTION

PHASE 5

I-10 CALCASIEU RIVER BRIDGE P3

DOTD — LOUISIANA DEPARTMENT OF TRANSPORTATION & DEVELOPMENT

CBP — CALCASIEU BRIDGE PARTNERS

TECHNICAL PROPOSAL PLANS

S:\xdrive\HUVAL Projects\7262 (I-10 Calcasieu P3)\05 Drawings\Roadway\Border to Print\XX_MOT_Phase 5.dgn 5/25/2023 2:27:36 PM

MATCHLINE M (SHEET 7 OF 7)

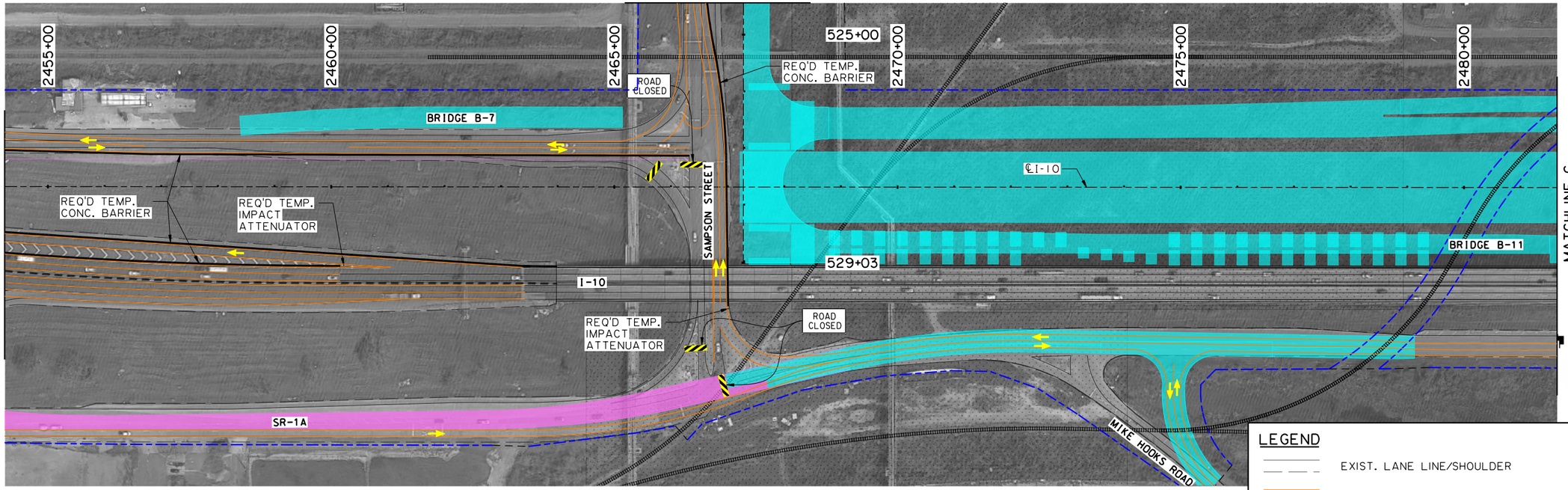

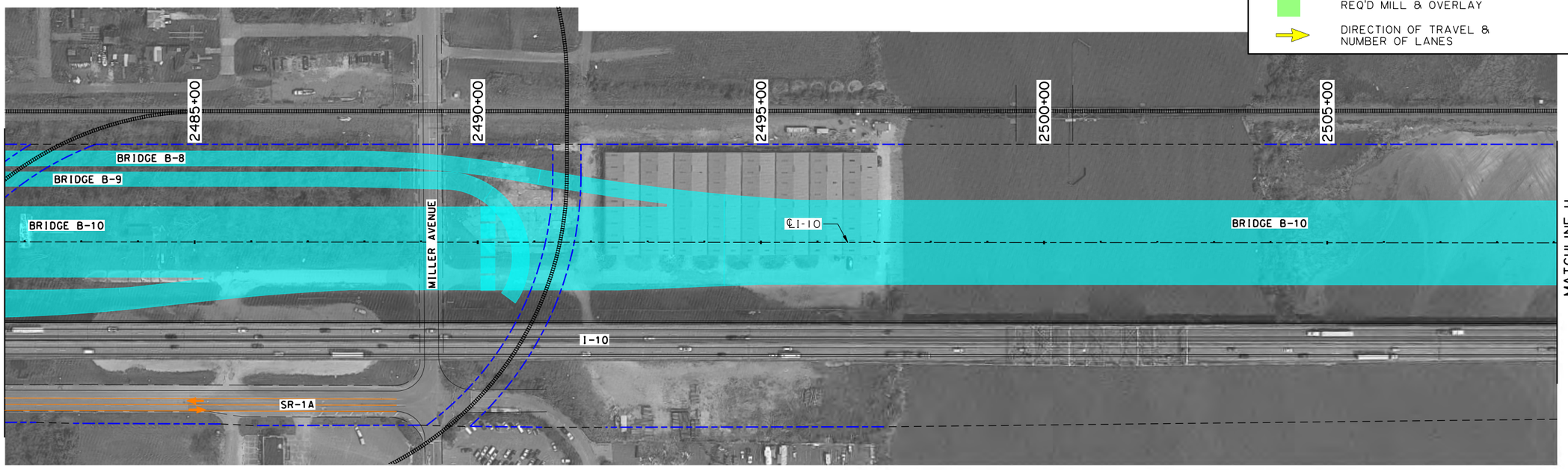

LEGEND

- EXIST. LANE LINE/SHOULDER
- SHIFTED TEMPORARY LANE LINE/SHOULDER
- EXIST. OR REQ'D R/W
- DESIGN BUILD LIMITS
- TEMPORARY CONCRETE BARRIERS
- CONSTRUCTION THIS PHASE
- CONSTRUCTED PREVIOUS PHASE
- REQ'D TEMPORARY PAVEMENT
- REQ'D MILL & OVERLAY
- DIRECTION OF TRAVEL & NUMBER OF LANES

SHEET NUMBER 68

PARISH	CONTROL SECTION	STATE PROJECT
CALCASIEU	450-91	H.003931

DESIGN	CHECK	DETAIL	CHECK	REVIEW	SERIES
G. McCALL	M.HELMINGER	M.HELMINGER	G. McCALL		4 OF 7

TECHNICAL PROPOSAL PLANS

PRELIMINARY
NOT FOR CONSTRUCTION

ENGINEER:
GLENN McCALL

LICENSE #:
29639

DATE:
5/25/2023

NO.	DATE	REVISION OR CHANGE ORDER DESCRIPTION	BY

SUGGESTED SEQUENCE OF CONSTRUCTION
PHASE 5

I-10 CALCASIEU RIVER BRIDGE P3

DOTD LOUISIANA DEPARTMENT OF TRANSPORTATION & DEVELOPMENT

CBP COLUMBIA BRIDGE PARTNERS

TECHNICAL PROPOSAL PLANS
S:\xdrive\HUVAL Projects\7262 (I-10 Calcasieu P3)\05 Drawings\Roadway\Border to Print\XX_MOT_Phase 5.dgn
5/25/2023 2:27:38 PM

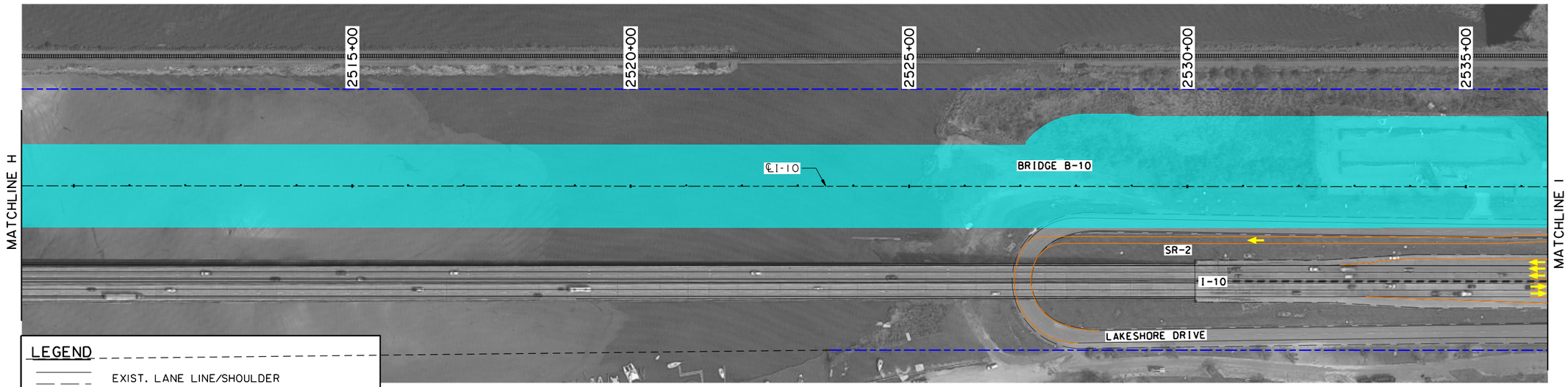

LEGEND

- EXIST. LANE LINE/SHOULDER
- SHIFTED TEMPORARY LANE LINE/SHOULDER
- EXIST. OR REQ'D R/W
- DESIGN BUILD LIMITS
- TEMPORARY CONCRETE BARRIERS
- CONSTRUCTION THIS PHASE
- CONSTRUCTED PREVIOUS PHASE
- REQ'D TEMPORARY PAVEMENT
- REQ'D MILL & OVERLAY
- DIRECTION OF TRAVEL & NUMBER OF LANES

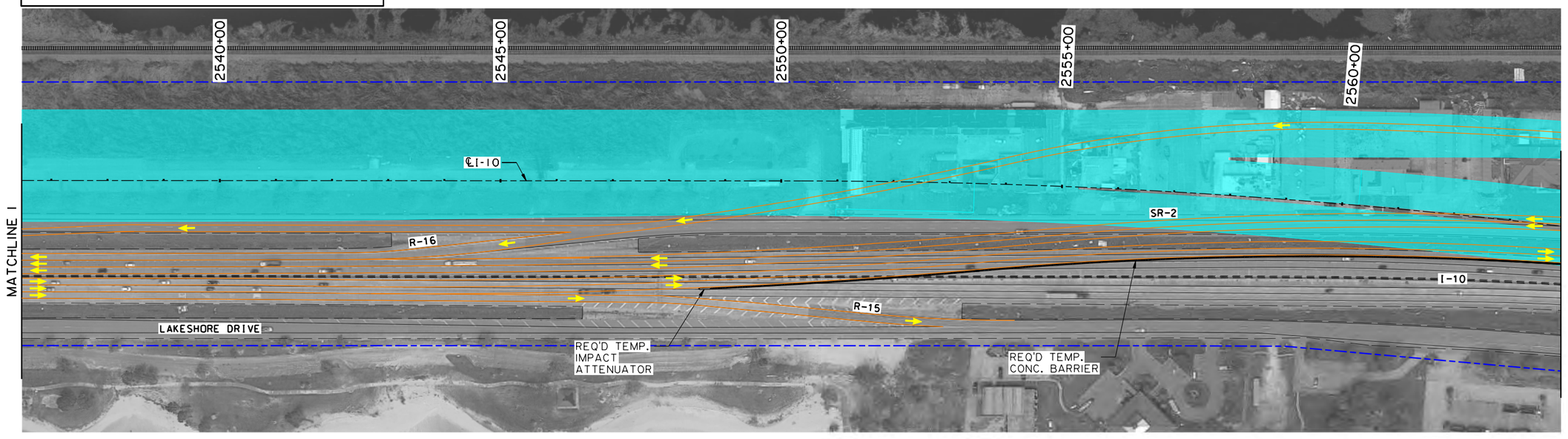

SHEET NUMBER	69
PARISH	CALCASIEU
CONTROL SECTION	450-91
STATE PROJECT	H.003931

DESIGN	G. McCALL	DETAIL	M.HELMINGER	REVIEW	SERIES = 5 OF 7
CHECK	M.HELMINGER	CHECK	G. McCALL		

TECHNICAL PROPOSAL PLANS

PRELIMINARY
NOT FOR CONSTRUCTION

ENGINEER:
GLENN McCALL

LICENSE #:
29639

DATE:
5/25/2023

NO.	DATE	REVISION OR CHANGE ORDER DESCRIPTION	BY

STATE OF LOUISIANA
DEPARTMENT OF TRANSPORTATION AND DEVELOPMENT

SUGGESTED SEQUENCE OF CONSTRUCTION

PHASE 5

I-10 CALCASIEU RIVER BRIDGE P3

DOTD
LOUISIANA DEPARTMENT OF TRANSPORTATION & DEVELOPMENT

CBP

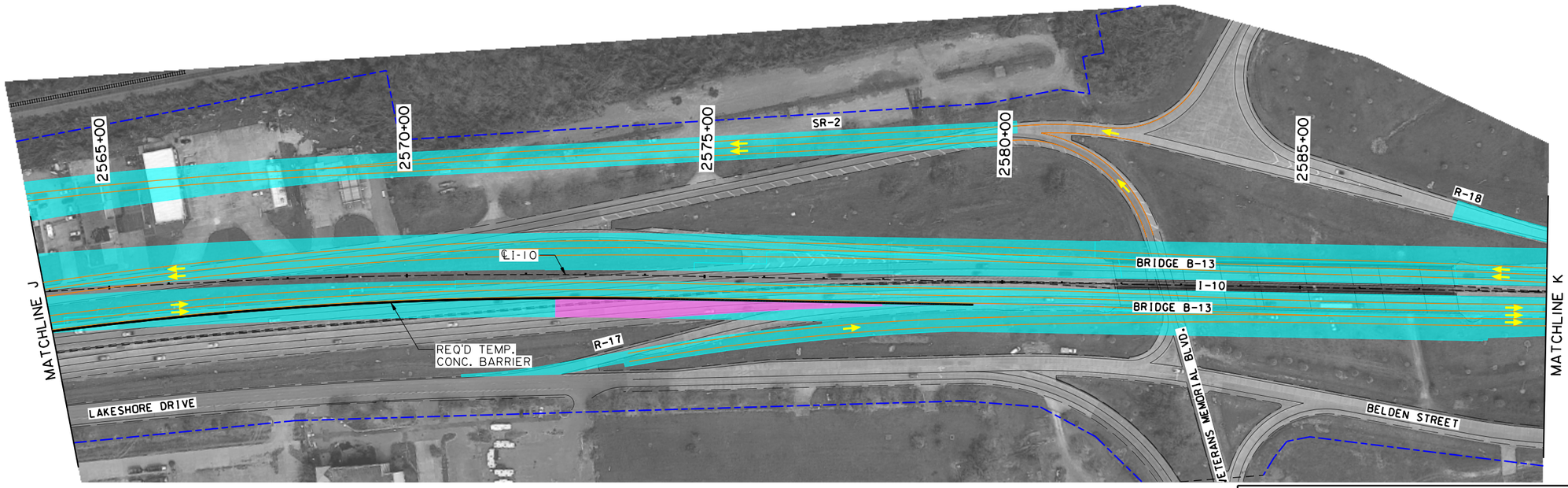

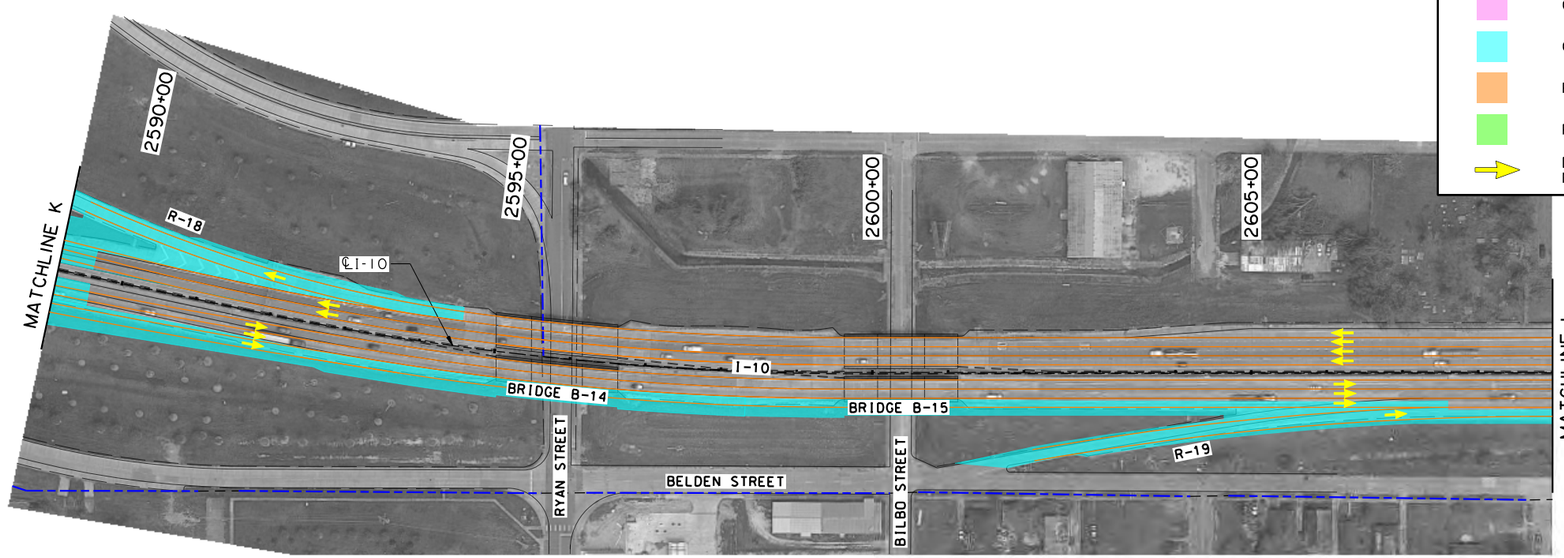

LEGEND

- EXIST. LANE LINE/SHOULDER
- SHIFTED TEMPORARY LANE LINE/SHOULDER
- EXIST. OR REQ'D R/W
- DESIGN BUILD LIMITS
- TEMPORARY CONCRETE BARRIERS
- CONSTRUCTION THIS PHASE
- CONSTRUCTED PREVIOUS PHASE
- REQ'D TEMPORARY PAVEMENT
- REQ'D MILL & OVERLAY
- DIRECTION OF TRAVEL & NUMBER OF LANES

N

N

SUGGESTED SEQUENCE OF CONSTRUCTION

PHASE 5

I-10 CALCASIEU RIVER BRIDGE P3

SHEET NUMBER 70

PARISH	CONTROL SECTION	STATE PROJECT
CALCASIEU	450-91	H.003931

DESIGN	G. McCALL	DETAIL	M.HELLMINGER
CHECK	M.HELLMINGER	CHECK	G. McCALL
REVIEW		SERIES #	6 OF 7

TECHNICAL PROPOSAL PLANS

PRELIMINARY
NOT FOR CONSTRUCTION
ENGINEER: GLENN McCALL
LICENSE #: 29639
DATE: 5/25/2023

NO.	DATE	REVISION OR CHANGE ORDER DESCRIPTION	BY

DOTD LOUISIANA DEPARTMENT OF TRANSPORTATION & DEVELOPMENT

CBP

TECHNICAL PROPOSAL PLANS

5/25/2023 2:27:41 PM

S:\xdrive\HUVAL Projects\7262 (I-10 Calcasieu P3)\05 Drawings\Roadway\Border to Print\XX_MOT_Phase 5.dgn

TECHNICAL PROPOSAL PLANS
S:\xdrive\HUVAL Projects\7262 (I-10 Calcasieu P3)\05 Drawings\Roadway\Border to Print\XX_MOT_Phase 5.dgn 5/25/2023 2:27:43 PM

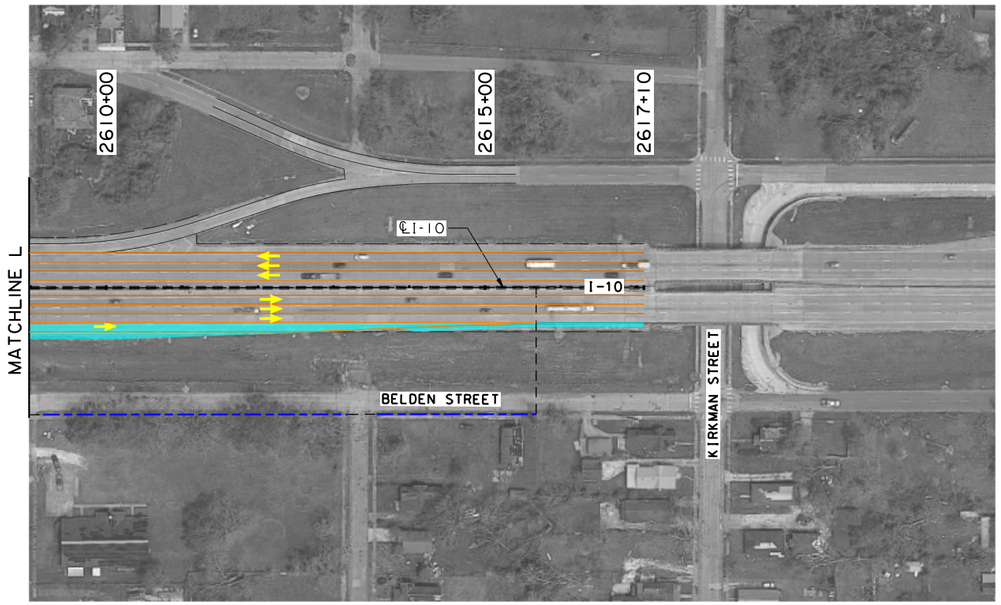

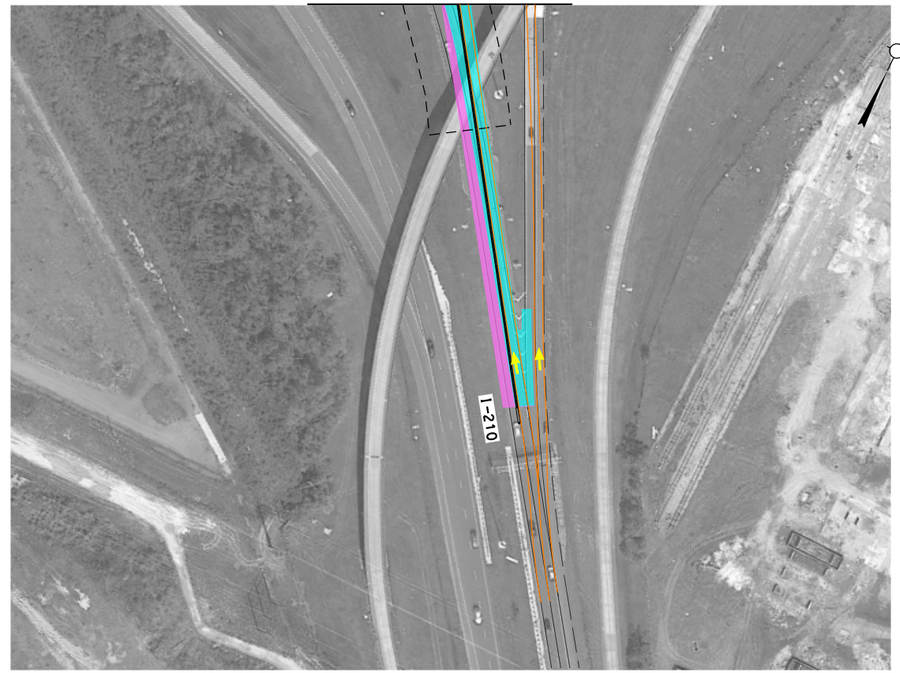

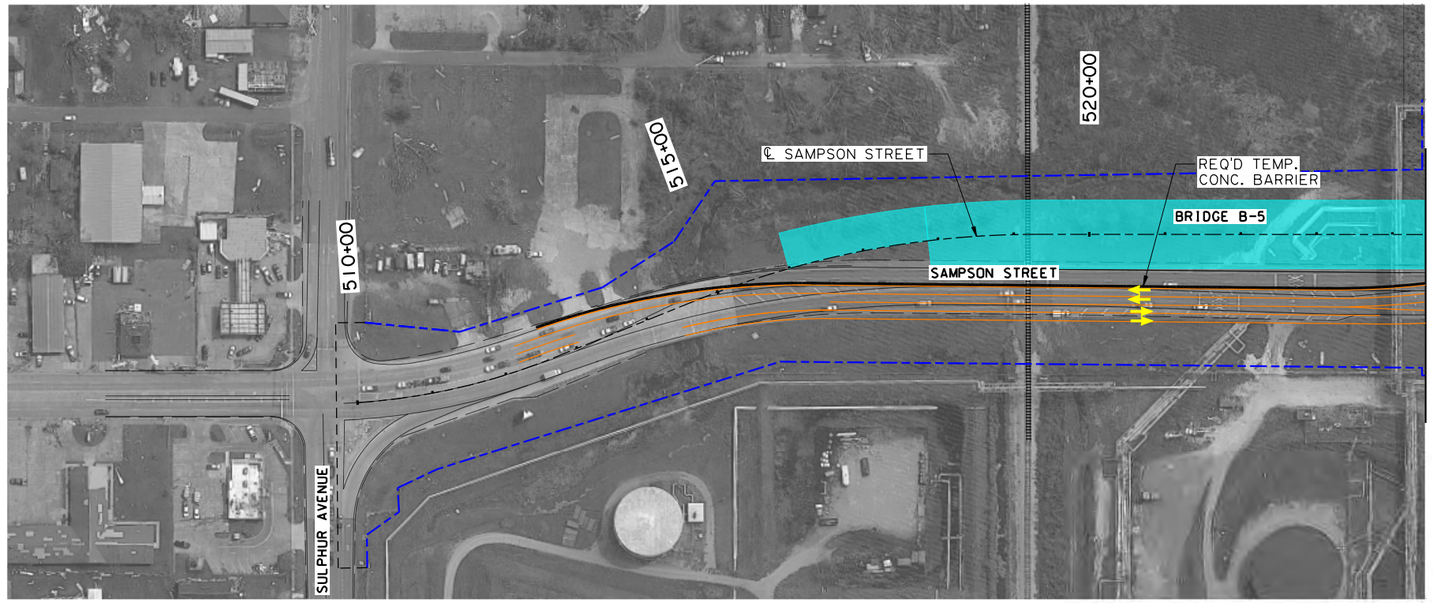

LEGEND

- EXIST. LANE LINE/SHOULDER
- SHIFTED TEMPORARY LANE LINE/SHOULDER
- EXIST. OR REQ'D R/W
- DESIGN BUILD LIMITS
- TEMPORARY CONCRETE BARRIERS
- CONSTRUCTION THIS PHASE
- CONSTRUCTED PREVIOUS PHASE
- REQ'D TEMPORARY PAVEMENT
- REQ'D MILL & OVERLAY
- DIRECTION OF TRAVEL & NUMBER OF LANES

SUGGESTED SEQUENCE OF CONSTRUCTION
PHASE 5

I-10 CALCASIEU RIVER BRIDGE P3

SHEET NUMBER	71

PARISH	CONTROL SECTION	STATE PROJECT
CALCASIEU	450-91	H.003931

DESIGN	G. McCALL	DETAIL	M.HELLMINGER	REVIEW	7 OF 7
CHECK	M.HELLMINGER	CHECK	G. McCALL	SERIES #	

TECHNICAL PROPOSAL PLANS

PRELIMINARY
NOT FOR CONSTRUCTION

ENGINEER:
GLENN McCALL

LICENSE #:
29639

DATE:
5/25/2023

NO.	DATE	REVISION OR CHANGE ORDER DESCRIPTION	BY

TECHNICAL PROPOSAL PLANS
S:\xdrive\HUVAL Projects\7262 (I-10 Calcasieu P3)\05 Drawings\Roadway\Border to Print\XX_MOT_Phase 6.dgn 5/25/2023 2:27:46 PM

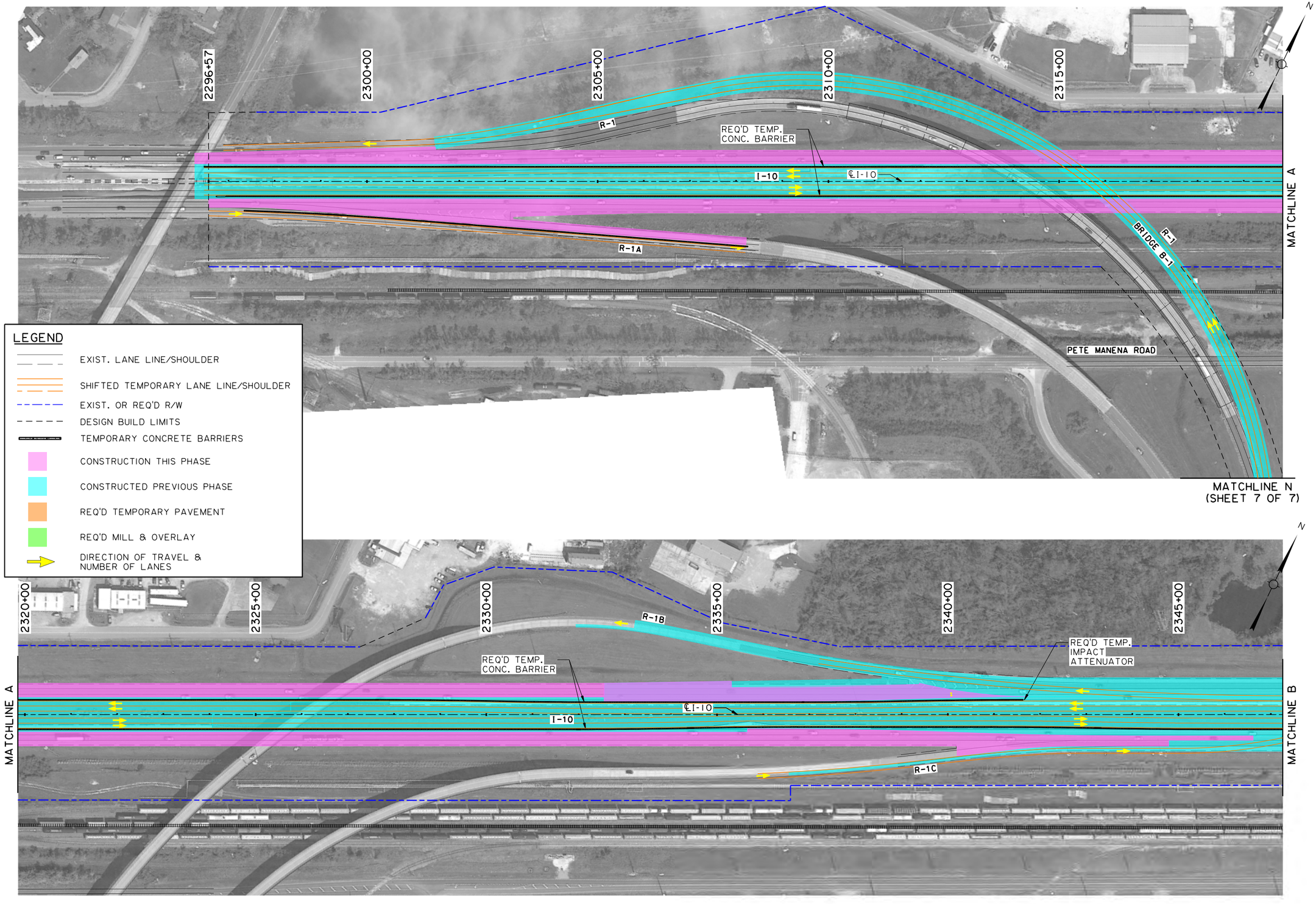

SUGGESTED SEQUENCE OF CONSTRUCTION
PHASE 6

I-10 CALCASIEU RIVER BRIDGE P3

SHEET NUMBER	72

PARISH	CONTROL SECTION	STATE PROJECT
CALCASIEU	450-91	H.003931

DESIGN	G. McCALL	DETAIL	M.HELMINGER	REVIEW	SERIES # 1 OF 7
CHECK	M.HELMINGER	CHECK	G. McCALL		

TECHNICAL PROPOSAL PLANS
PRELIMINARY
NOT FOR CONSTRUCTION
ENGINEER:
GLENN McCALL
LICENSE #:
29639
DATE:
5/25/2023

NO.	DATE	REVISION OR CHANGE ORDER DESCRIPTION	BY

TECHNICAL PROPOSAL PLANS

S:\xdrive\HUVAL Projects\7262 (I-10 Calcasieu P3)\05 Drawings\Roadway\Border to Print\XX_MOT_Phase 6.dgn 5/25/2023 2:27:49 PM

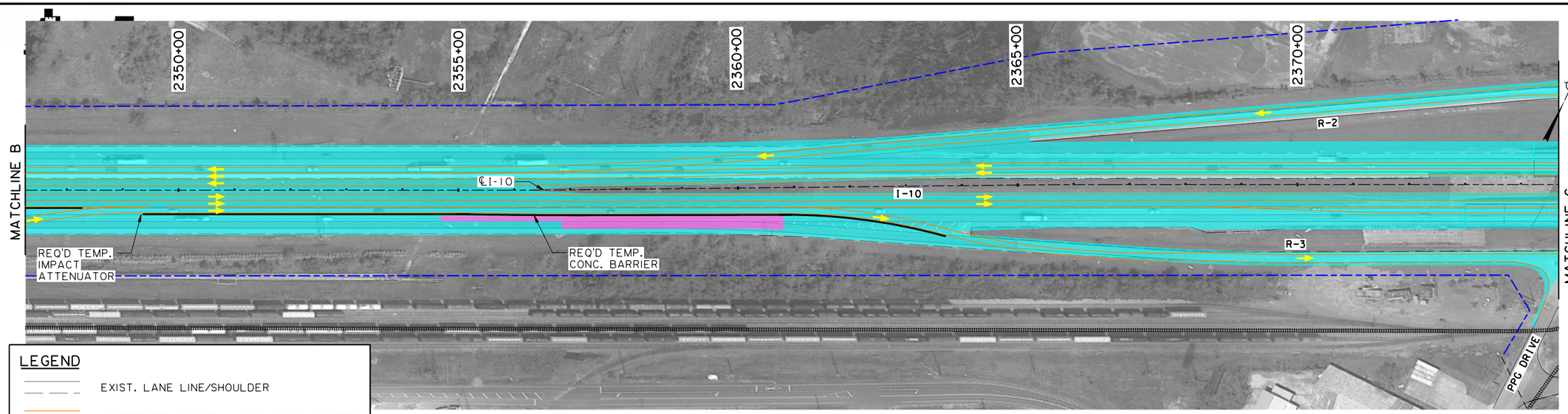

LEGEND

- EXIST. LANE LINE/SHOULDER
- SHIFTED TEMPORARY LANE LINE/SHOULDER
- EXIST. OR REQ'D R/W
- DESIGN BUILD LIMITS
- TEMPORARY CONCRETE BARRIERS
- CONSTRUCTION THIS PHASE
- CONSTRUCTED PREVIOUS PHASE
- REQ'D TEMPORARY PAVEMENT
- REQ'D MILL & OVERLAY
- DIRECTION OF TRAVEL & NUMBER OF LANES

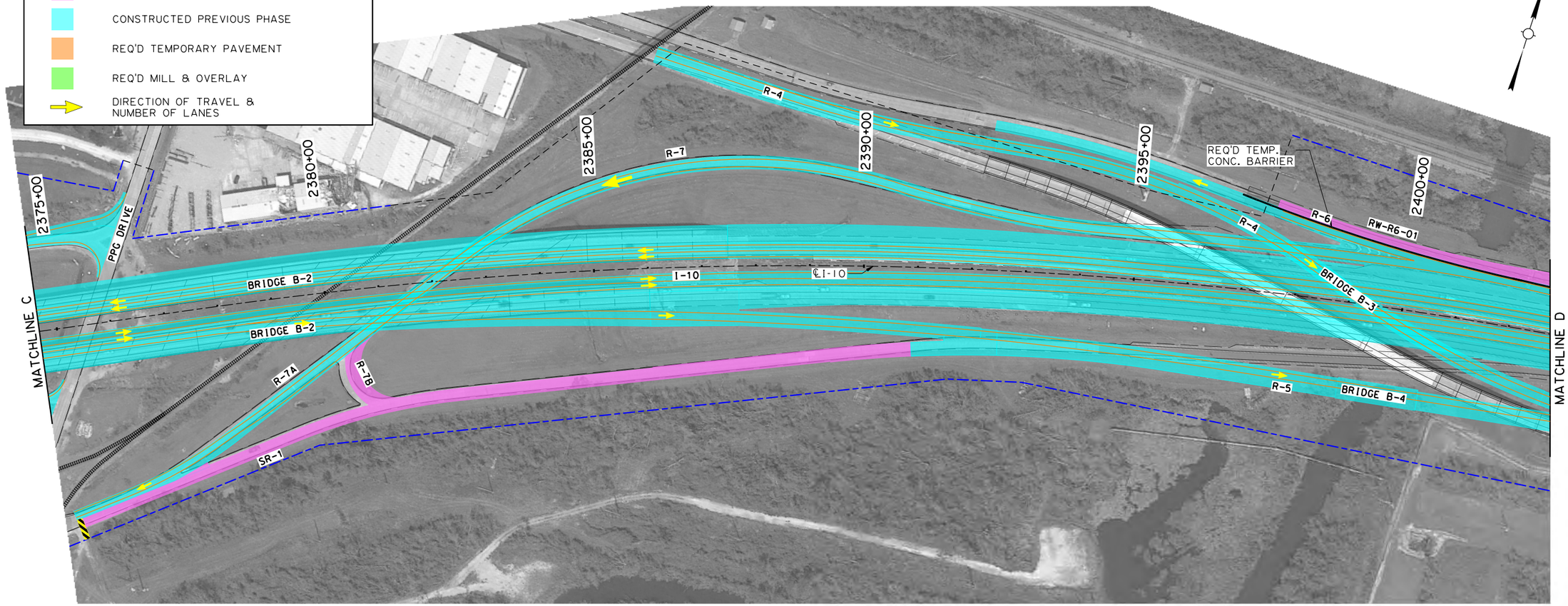

SUGGESTED SEQUENCE OF CONSTRUCTION
PHASE 6

I-10 CALCASIEU RIVER BRIDGE P3

SHEET NUMBER	73

PARISH	CONTROL SECTION	STATE PROJECT
CALCASIEU	450-91	H.003931

	DESIGN	CHECK	DETAIL	CHECK	REVIEW	SERIES #
	G. McCALL	M.HELMINGER	M.HELMINGER	G. McCALL		2 OF 7

TECHNICAL PROPOSAL PLANS

PRELIMINARY
NOT FOR CONSTRUCTION

ENGINEER:
GLENN McCALL

LICENSE #:
29639

DATE:
5/25/2023

NO.	DATE	REVISION OR CHANGE ORDER DESCRIPTION	BY

STATE OF LOUISIANA DEPARTMENT OF TRANSPORTATION & DEVELOPMENT

DOTD

CBP CALCASIEU BRIDGE PARTNERS

S:\xdrive\HUVAL Projects\7262 (I-10 Calcasieu P3)\05 Drawings\Roadway\Border to Print\XX_MOT_Phase 6.dgn 5/25/2023 2:27:57 PM

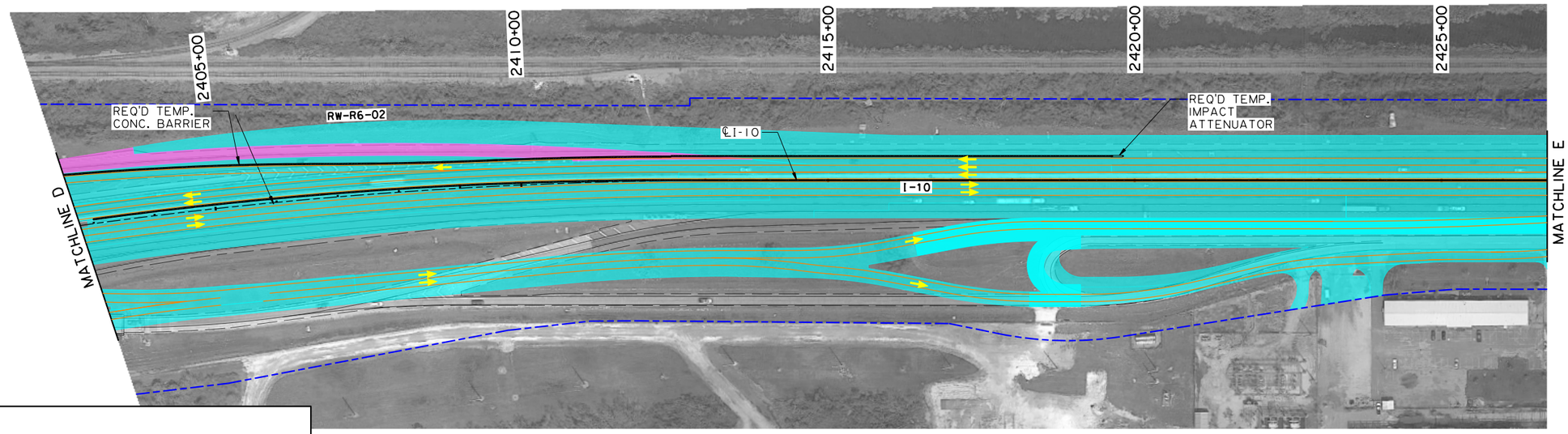

LEGEND

- EXIST. LANE LINE/SHOULDER
- SHIFTED TEMPORARY LANE LINE/SHOULDER
- EXIST. OR REQ'D R/W
- DESIGN BUILD LIMITS
- TEMPORARY CONCRETE BARRIERS
- CONSTRUCTION THIS PHASE
- CONSTRUCTED PREVIOUS PHASE
- REQ'D TEMPORARY PAVEMENT
- REQ'D MILL & OVERLAY
- DIRECTION OF TRAVEL & NUMBER OF LANES

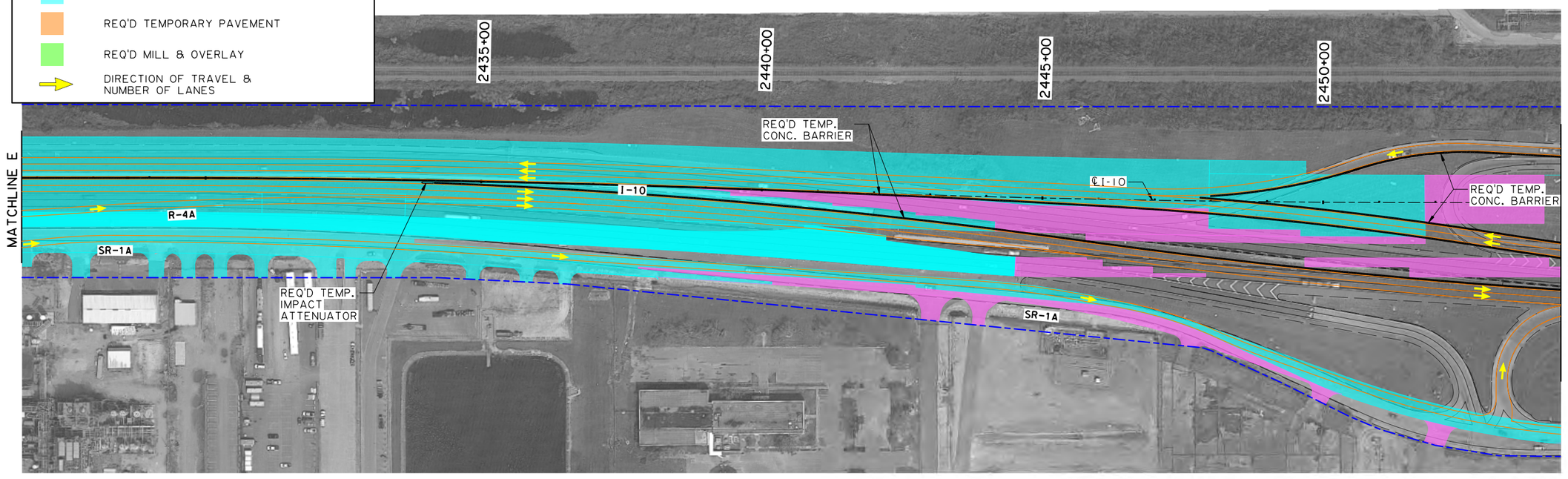

SHEET NUMBER 74

PARISH	CONTROL SECTION	STATE PROJECT
CALCASIEU	450-91	H.003931

DESIGN	G. McCALL	DETAIL	M.HELMINGER	REVIEW
CHECK	M.HELMINGER	CHECK	G. McCALL	SERIES = 3 OF 7

TECHNICAL PROPOSAL PLANS

PRELIMINARY
NOT FOR CONSTRUCTION

ENGINEER:
GLENN McCALL

LICENSE #:
29639

DATE:
5/25/2023

NO.	DATE	REVISION OR CHANGE ORDER DESCRIPTION	BY

SUGGESTED SEQUENCE OF CONSTRUCTION

PHASE 6

I-10 CALCASIEU RIVER BRIDGE P3

LOUISIANA DEPARTMENT OF TRANSPORTATION & DEVELOPMENT

CBP

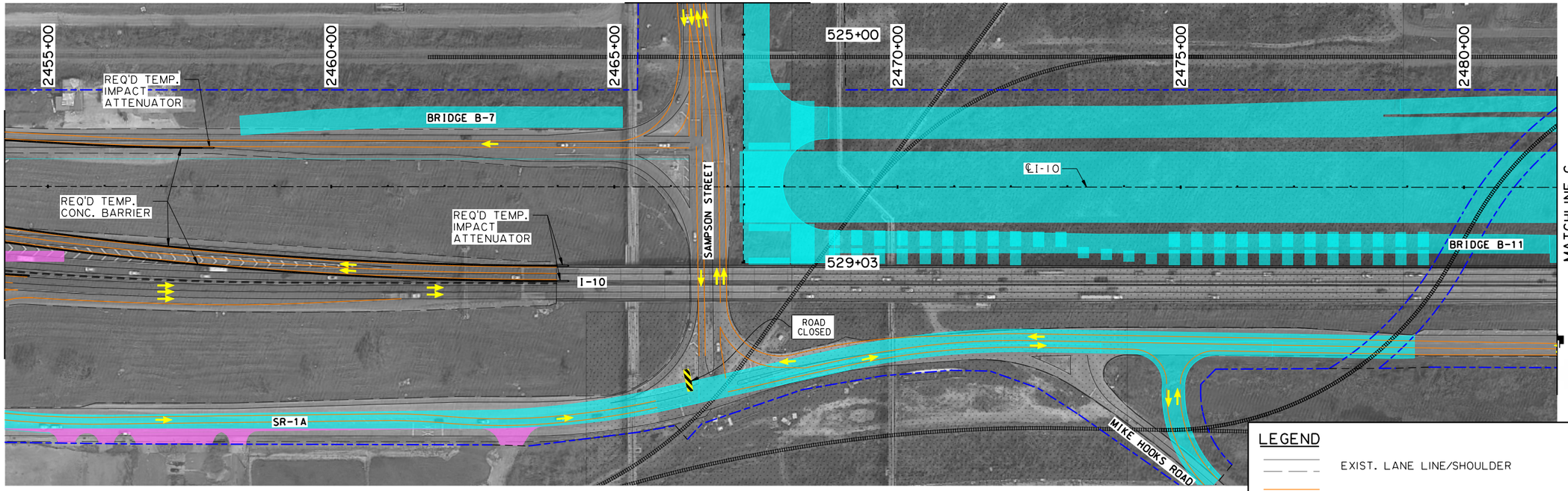

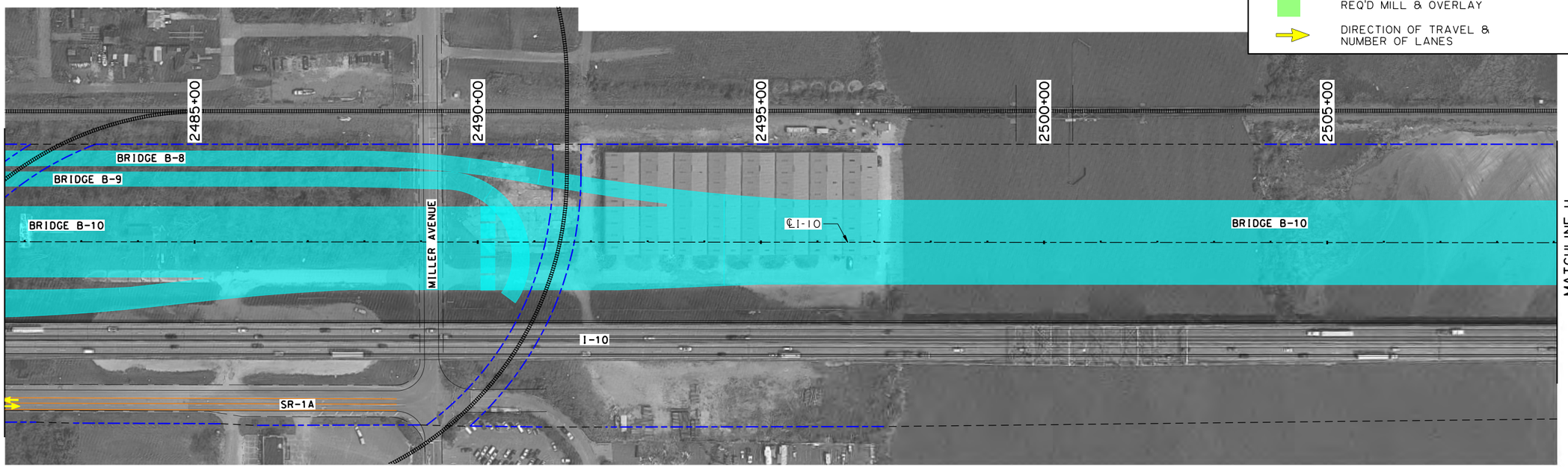

LEGEND

- EXIST. LANE LINE/SHOULDER
- SHIFTED TEMPORARY LANE LINE/SHOULDER
- EXIST. OR REQ'D R/W
- DESIGN BUILD LIMITS
- TEMPORARY CONCRETE BARRIERS
- CONSTRUCTION THIS PHASE
- CONSTRUCTED PREVIOUS PHASE
- REQ'D TEMPORARY PAVEMENT
- REQ'D MILL & OVERLAY
- DIRECTION OF TRAVEL & NUMBER OF LANES

SUGGESTED SEQUENCE OF CONSTRUCTION
PHASE 6

I-10 CALCASIEU RIVER BRIDGE P3

SHEET NUMBER	75

PARISH	CONTROL SECTION	STATE PROJECT
CALCASIEU	450-91	H.003931

DESIGN	CHECK	DETAIL	CHECK	REVIEW	SERIES = 4 OF 7
G. McCALL	M.HELMINGER	M.HELMINGER	G. McCALL		

TECHNICAL PROPOSAL PLANS
PRELIMINARY
NOT FOR CONSTRUCTION
ENGINEER:
GLENN McCALL
LICENSE #:
29639
DATE:
5/25/2023

NO.	DATE	REVISION OR CHANGE ORDER DESCRIPTION	BY

LOUISIANA DEPARTMENT OF TRANSPORTATION & DEVELOPMENT

CBP COLORADO BRIDGE PARTNER

TECHNICAL PROPOSAL PLANS

S:\xdrive\HUVAL Projects\7262 (I-10 Calcasieu P3)\05 Drawings\Roadway\Border to Print\XX_MOT_Phase 6.dgn 5/25/2023 2:27:59 PM

S:\xdrive\HUVAL Projects\7262 (I-10 Calcasieu P3)\05 Drawings\Roadway\Border to Print\XX_MOT_Phase 6.dgn 5/25/2023 2:28:02 PM

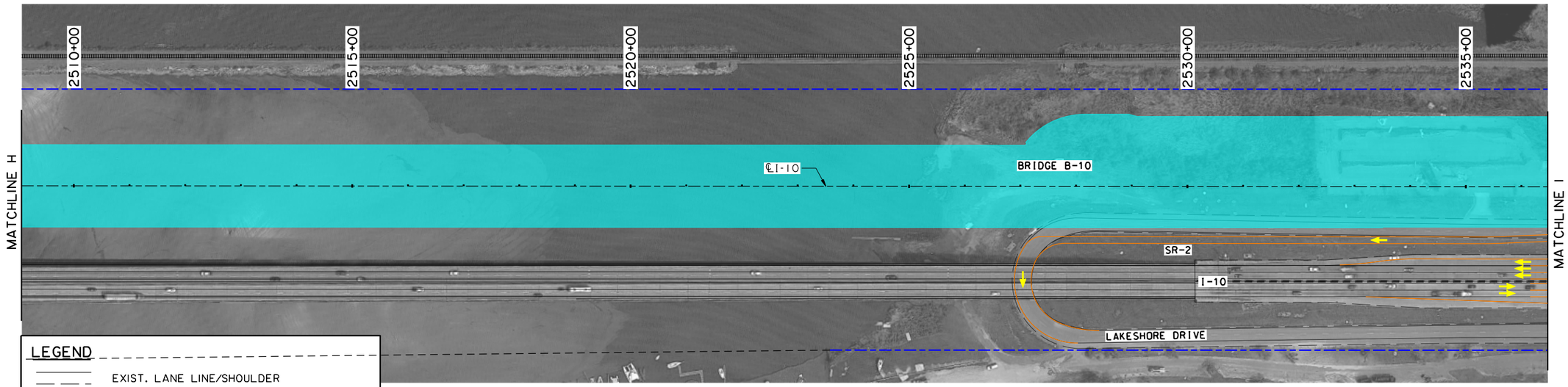

LEGEND

- EXIST. LANE LINE/SHOULDER
- SHIFTED TEMPORARY LANE LINE/SHOULDER
- EXIST. OR REQ'D R/W
- DESIGN BUILD LIMITS
- TEMPORARY CONCRETE BARRIERS
- CONSTRUCTION THIS PHASE
- CONSTRUCTED PREVIOUS PHASE
- REQ'D TEMPORARY PAVEMENT
- REQ'D MILL & OVERLAY
- DIRECTION OF TRAVEL & NUMBER OF LANES

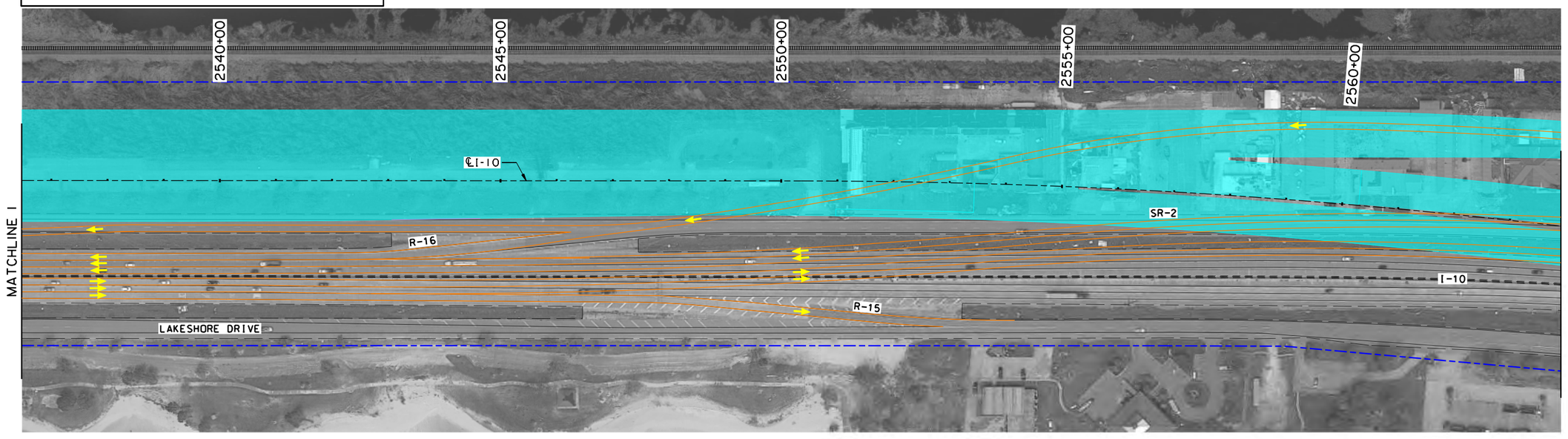

SHEET NUMBER 76

PARISH	CONTROL SECTION	STATE PROJECT
CALCASIEU	450-91	H.003931

DESIGN	G. McCALL	DETAIL	M.HELMINGER	REVIEW	SERIES = 5 OF 7
CHECK	M.HELMINGER	CHECK	G. McCALL		

TECHNICAL PROPOSAL PLANS

PRELIMINARY
NOT FOR CONSTRUCTION

ENGINEER:
GLENN McCALL

LICENSE #:
29639

DATE:
5/25/2023

NO.	DATE	REVISION OR CHANGE ORDER DESCRIPTION	BY

STATE OF LOUISIANA — DEPARTMENT OF TRANSPORTATION AND DEVELOPMENT

SUGGESTED SEQUENCE OF CONSTRUCTION

PHASE 6

I-10 CALCASIEU RIVER BRIDGE P3

DOTD — LOUISIANA DEPARTMENT OF TRANSPORTATION & DEVELOPMENT

CBP — CALCASIEU BRIDGE PARTNERS

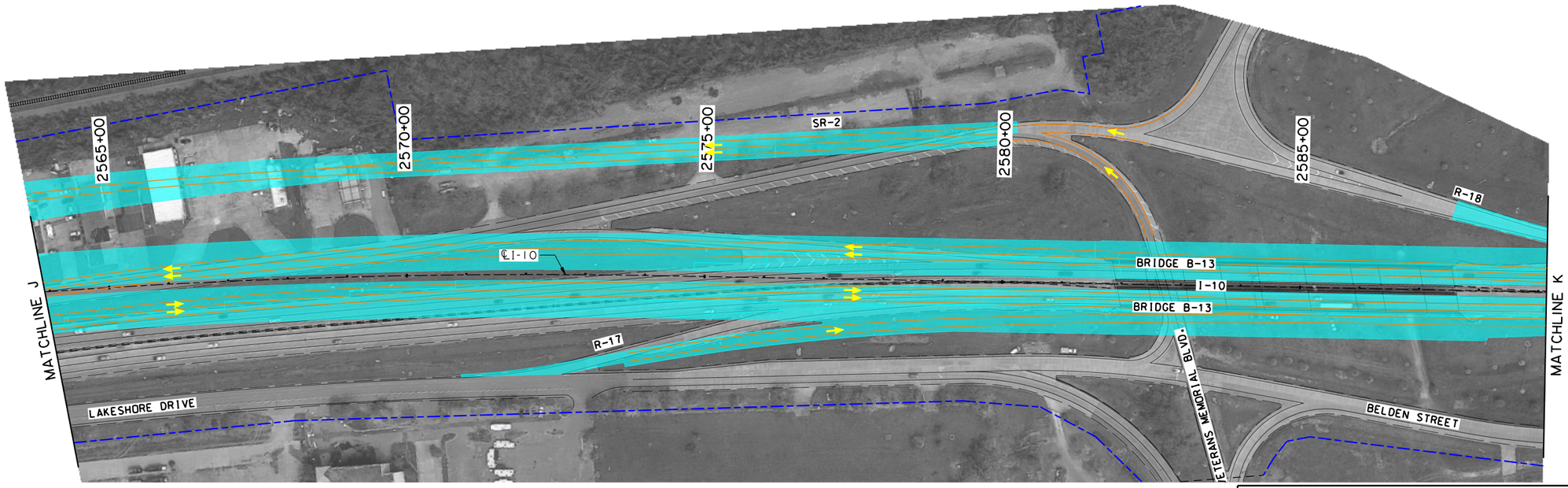

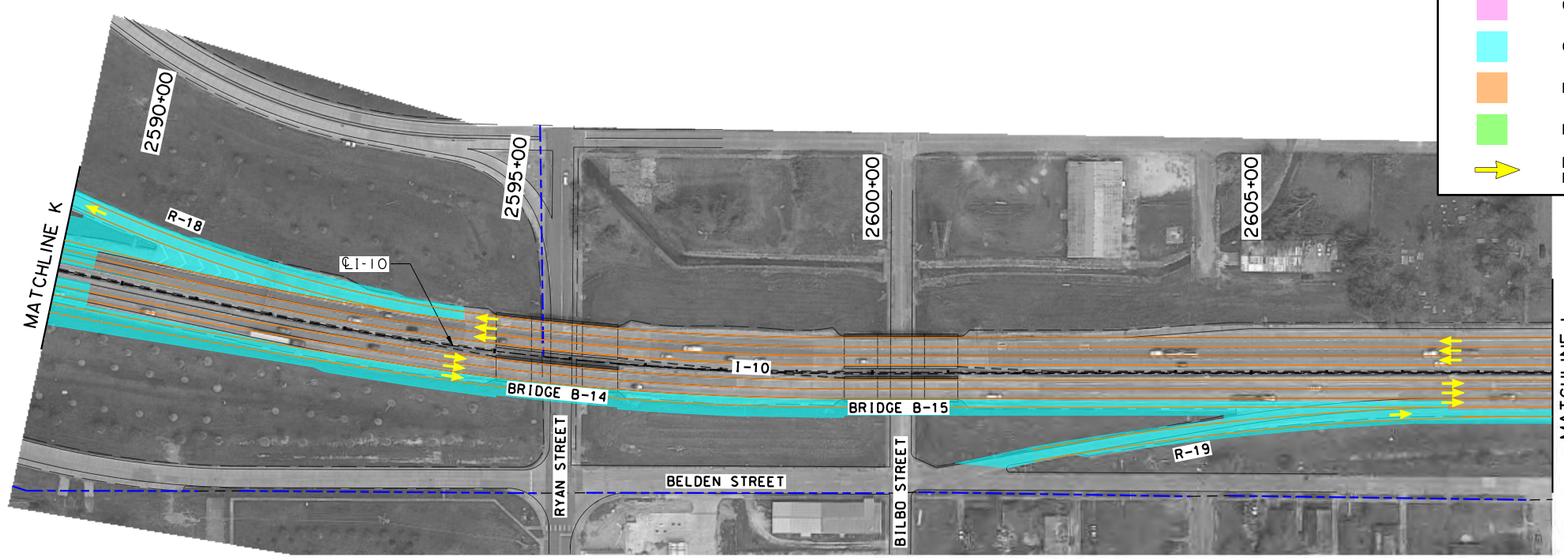

LEGEND

- EXIST. LANE LINE/SHOULDER
- SHIFTED TEMPORARY LANE LINE/SHOULDER
- EXIST. OR REQ'D R/W
- DESIGN BUILD LIMITS
- TEMPORARY CONCRETE BARRIERS
- CONSTRUCTION THIS PHASE
- CONSTRUCTED PREVIOUS PHASE
- REQ'D TEMPORARY PAVEMENT
- REQ'D MILL & OVERLAY
- DIRECTION OF TRAVEL & NUMBER OF LANES

SHEET NUMBER 77

PARISH	CONTROL SECTION	STATE PROJECT
CALCASIEU	450-91	H.003931

DESIGN	G. McCALL	DETAIL	M.HELLMINGER	
CHECK	M.HELLMINGER	CHECK	G. McCALL	
REVIEW		SERIES #	6 OF 7	

TECHNICAL PROPOSAL PLANS

PRELIMINARY
NOT FOR CONSTRUCTION

ENGINEER:
GLENN McCALL

LICENSE #:
29639

DATE:
5/25/2023

NO.	DATE	REVISION OR CHANGE ORDER DESCRIPTION	BY

STATE OF LOUISIANA

SUGGESTED SEQUENCE OF CONSTRUCTION

PHASE 6

I-10 CALCASIEU RIVER BRIDGE P3

DOTD LOUISIANA DEPARTMENT OF TRANSPORTATION & DEVELOPMENT

CBP

TECHNICAL PROPOSAL PLANS

5/25/2023 2:28:04 PM

S:\xdrive\HUVAL Projects\7262 (I-10 Calcasieu P3)\05 Drawings\Roadway\Border to Print\XX_MOT_Phase 6.dgn

TECHNICAL PROPOSAL PLANS
S:\xdrive\HUVAL Projects\7262 (I-10 Calcasieu P3)\05 Drawings\Roadway\Border to Print\XX_MOT_Phase 6.dgn 5/25/2023 2:28:06 PM

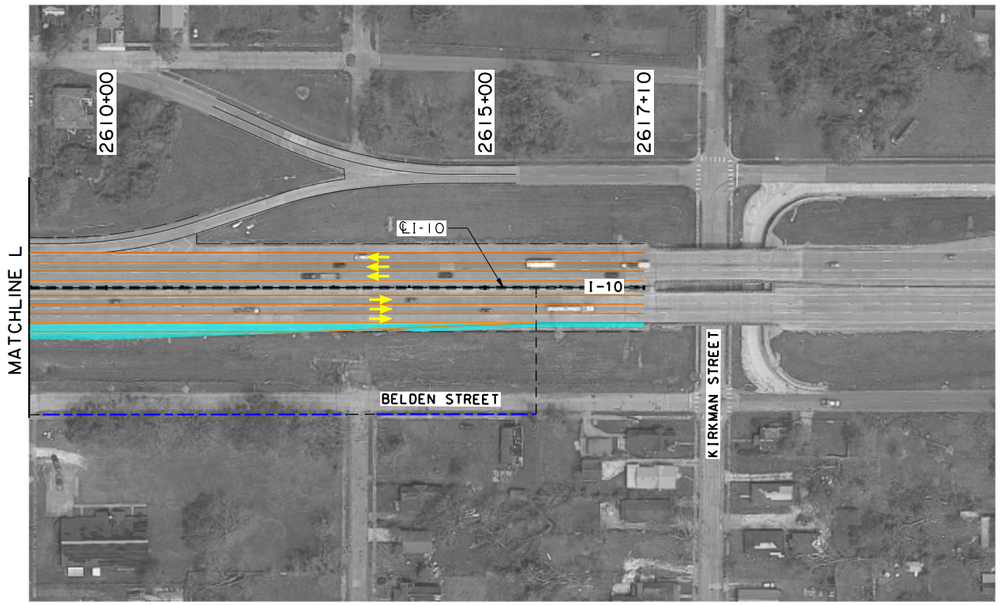

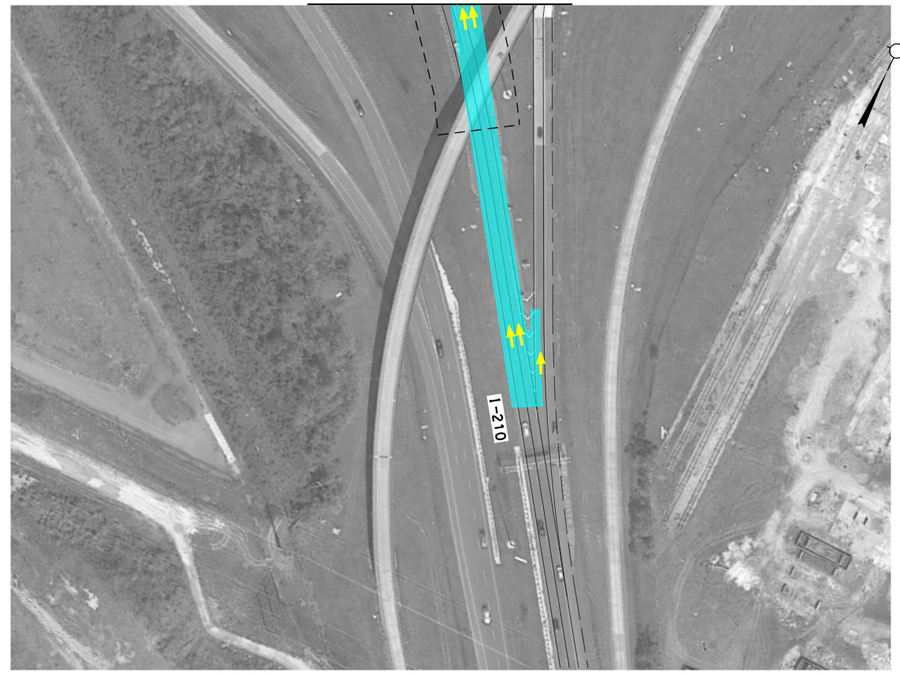

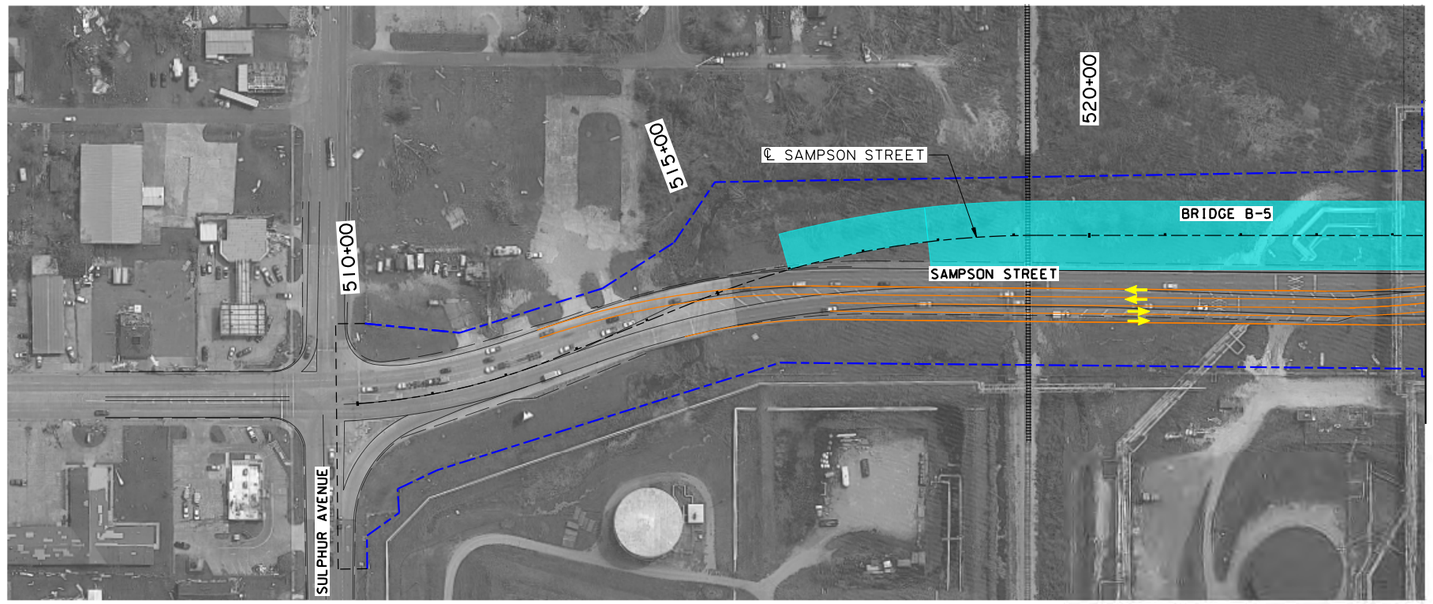

LEGEND

- EXIST. LANE LINE/SHOULDER
- SHIFTED TEMPORARY LANE LINE/SHOULDER
- EXIST. OR REQ'D R/W
- DESIGN BUILD LIMITS
- TEMPORARY CONCRETE BARRIERS
- CONSTRUCTION THIS PHASE
- CONSTRUCTED PREVIOUS PHASE
- REQ'D TEMPORARY PAVEMENT
- REQ'D MILL & OVERLAY
- DIRECTION OF TRAVEL & NUMBER OF LANES

SHEET NUMBER 78

PARISH	CONTROL SECTION	STATE PROJECT
CALCASIEU	450-91	H.003931

DESIGN	G. McCALL
CHECK	M.HELLMINGER
DETAIL	M.HELLMINGER
CHECK	G. McCALL
REVIEW	
SERIES #	7 OF 7

TECHNICAL PROPOSAL PLANS
PRELIMINARY
NOT FOR CONSTRUCTION
ENGINEER:
GLENN McCALL
LICENSE #:
29639
DATE:
5/25/2023

NO.	DATE	REVISION OR CHANGE ORDER DESCRIPTION	BY

SUGGESTED SEQUENCE OF CONSTRUCTION
PHASE 6

I-10 CALCASIEU RIVER BRIDGE P3

TECHNICAL PROPOSAL PLANS
S:\xdrive\HUVAL Projects\7262 (I-10 Calcasieu P3)\05 Drawings\Roadway\Border to Print\XX_MOT_Phase 7.dgn
5/25/2023 2:28:10 PM

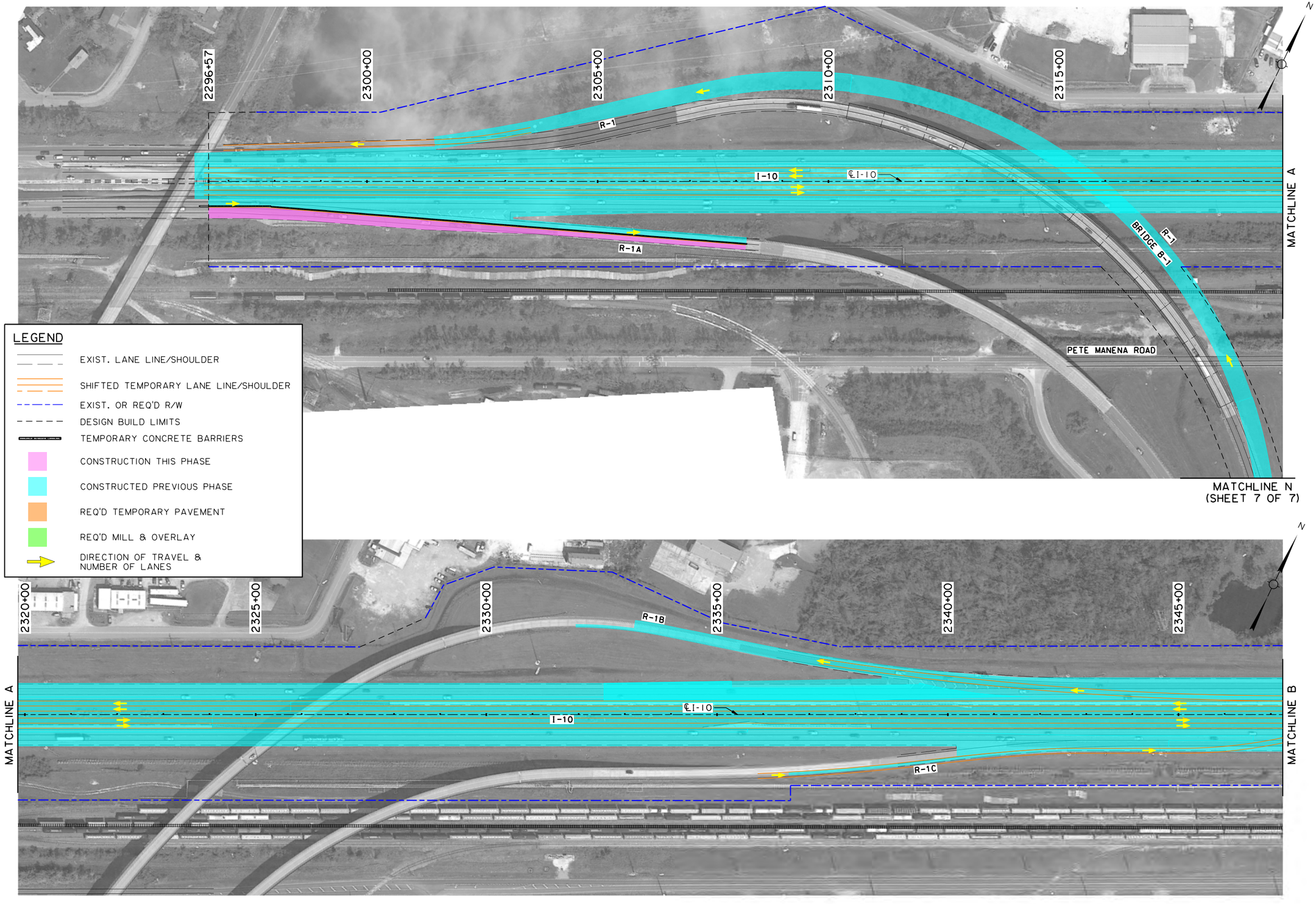

SHEET NUMBER	79

PARISH	CONTROL SECTION	STATE PROJECT
CALCASIEU	450-91	H.003931

DESIGN	G. McCALL	DETAIL	M.HELMINGER	REVIEW	SERIES = 1 OF 7
CHECK	M.HELMINGER	CHECK	G. McCALL		

TECHNICAL PROPOSAL PLANS

PRELIMINARY
NOT FOR CONSTRUCTION

ENGINEER:
GLENN McCALL

LICENSE #:
29639

DATE:
5/25/2023

NO.	DATE	REVISION OR CHANGE ORDER DESCRIPTION	BY

SUGGESTED SEQUENCE OF CONSTRUCTION
PHASE 7

I-10 CALCASIEU RIVER BRIDGE P3

DOTD LOUISIANA DEPARTMENT OF TRANSPORTATION & DEVELOPMENT

CBP

TECHNICAL PROPOSAL PLANS
S:\xdrive\HUVAL Projects\7262 (I-10 Calcasieu P3)\05 Drawings\Roadway\Border to Print\VX_MOT Phase 7.dgn
5/25/2023 2:28:13 PM

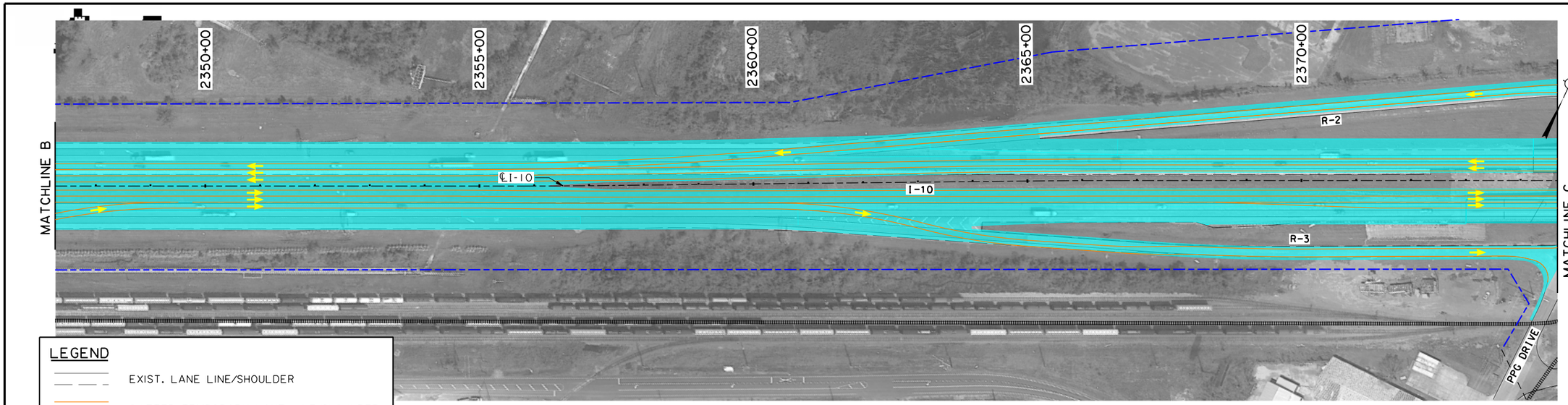

LEGEND

- EXIST. LANE LINE/SHOULDER
- SHIFTED TEMPORARY LANE LINE/SHOULDER
- EXIST. OR REQ'D R/W
- DESIGN BUILD LIMITS
- TEMPORARY CONCRETE BARRIERS
- CONSTRUCTION THIS PHASE
- CONSTRUCTED PREVIOUS PHASE
- REQ'D TEMPORARY PAVEMENT
- REQ'D MILL & OVERLAY
- DIRECTION OF TRAVEL & NUMBER OF LANES

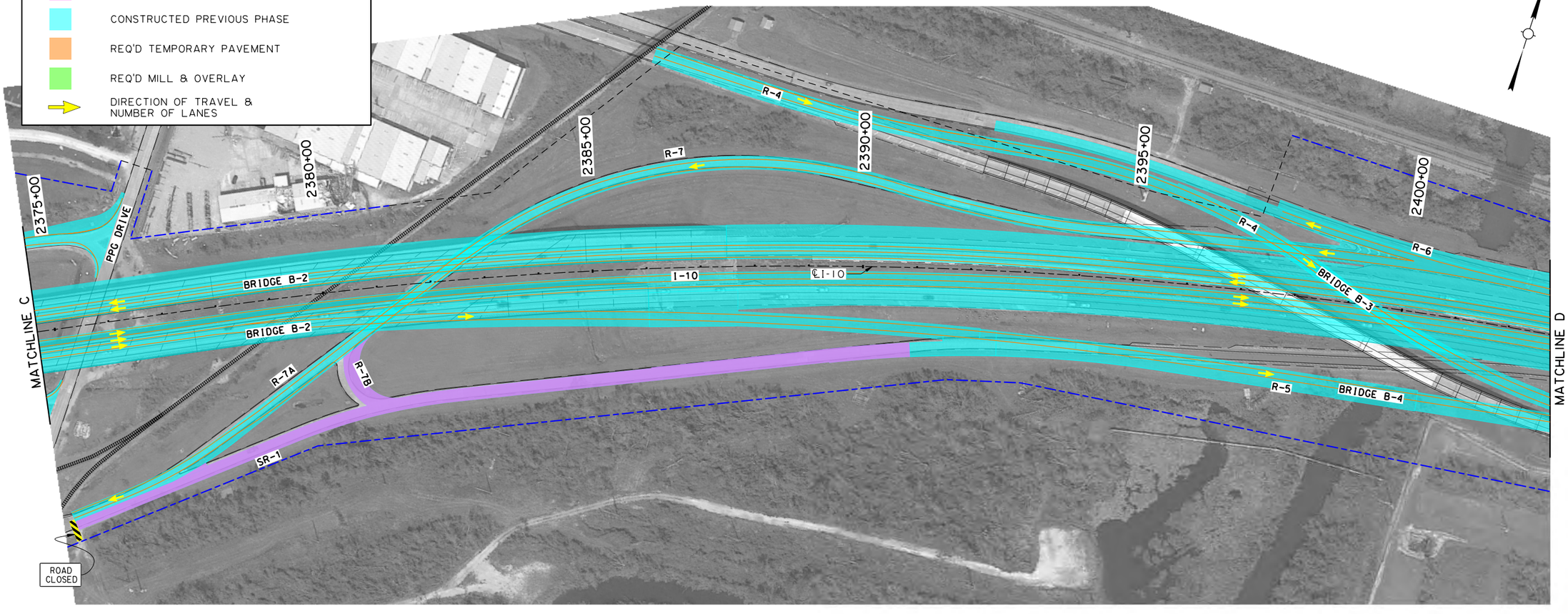

SHEET NUMBER 80

PARISH	CONTROL SECTION	STATE PROJECT
CALCASIEU	450-91	H.003931

DESIGN	CHECK	DETAIL	CHECK	REVIEW	SERIES #
G. McCALL	M.HELMINGER	M.HELMINGER	G. McCALL		2 OF 7

TECHNICAL PROPOSAL PLANS

PRELIMINARY
NOT FOR CONSTRUCTION

ENGINEER:
GLENN McCALL

LICENSE #:
29639

DATE:
5/25/2023

NO.	DATE	REVISION OR CHANGE ORDER DESCRIPTION	BY

STATE OF LOUISIANA
DEPARTMENT OF TRANSPORTATION AND DEVELOPMENT

SUGGESTED SEQUENCE OF CONSTRUCTION

PHASE 7

I-10 CALCASIEU RIVER BRIDGE P3

DOTD
LOUISIANA DEPARTMENT OF TRANSPORTATION & DEVELOPMENT

CBP
CALCASIEU BRIDGE PARTNERS

TECHNICAL PROPOSAL PLANS

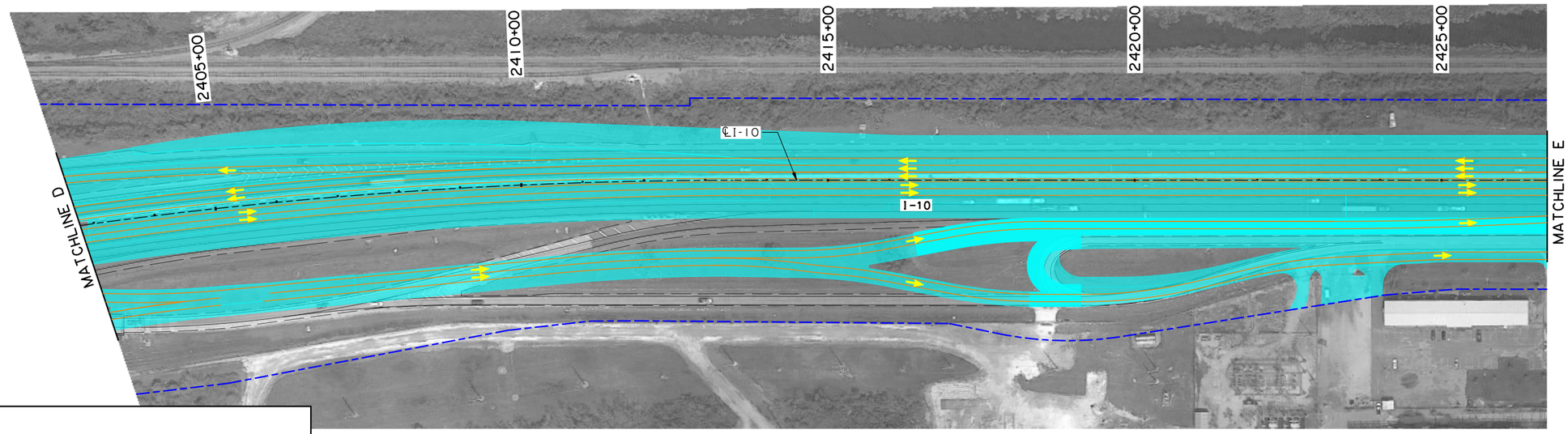

LEGEND

- EXIST. LANE LINE/SHOULDER
- SHIFTED TEMPORARY LANE LINE/SHOULDER
- EXIST. OR REQ'D R/W
- DESIGN BUILD LIMITS
- TEMPORARY CONCRETE BARRIERS
- CONSTRUCTION THIS PHASE
- CONSTRUCTED PREVIOUS PHASE
- REQ'D TEMPORARY PAVEMENT
- REQ'D MILL & OVERLAY
- DIRECTION OF TRAVEL & NUMBER OF LANES

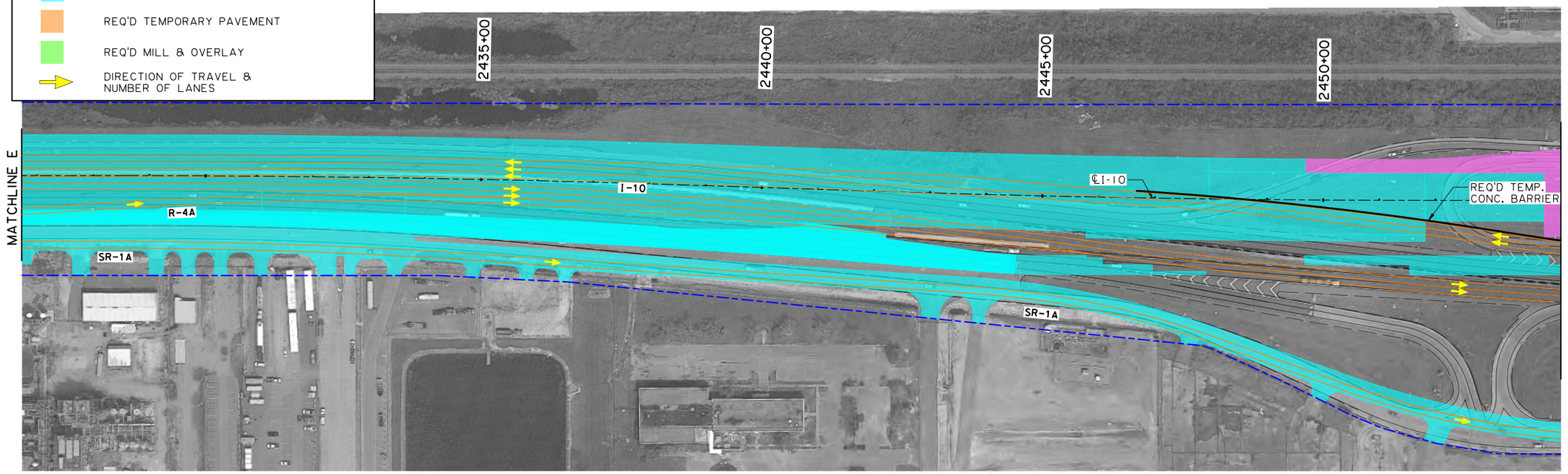

SHEET NUMBER 81

PARISH	CONTROL SECTION	STATE PROJECT
CALCASIEU	450-91	H.003931

DESIGN	G. McCALL	DETAIL	M.HELMINGER	REVIEW
CHECK	M.HELMINGER	CHECK	G. McCALL	SERIES = 3 OF 7

TECHNICAL PROPOSAL PLANS

PRELIMINARY
NOT FOR CONSTRUCTION

ENGINEER:
GLENN McCALL

LICENSE #:
29639

DATE:
5/25/2023

NO.	DATE	REVISION OR CHANGE ORDER DESCRIPTION	BY

SUGGESTED SEQUENCE OF CONSTRUCTION
PHASE 7

I-10 CALCASIEU RIVER BRIDGE P3

DOTD LOUISIANA DEPARTMENT OF TRANSPORTATION & DEVELOPMENT

CBP

5/25/2023 2:28:15 PM

S:\xdrive\HUVAL Projects\7262 (I-10 Calcasieu P3)\05 Drawings\Roadway\Border to Print\XX_MOT_Phase 7.dgn

MATCHLINE M (SHEET 7 OF 7)

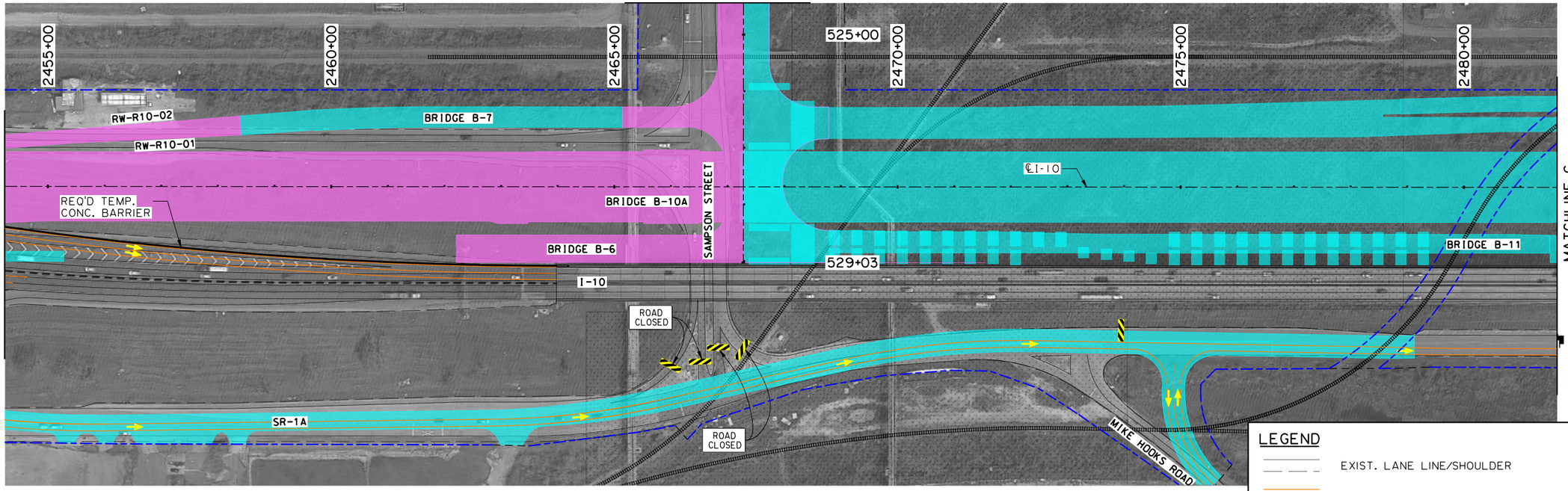

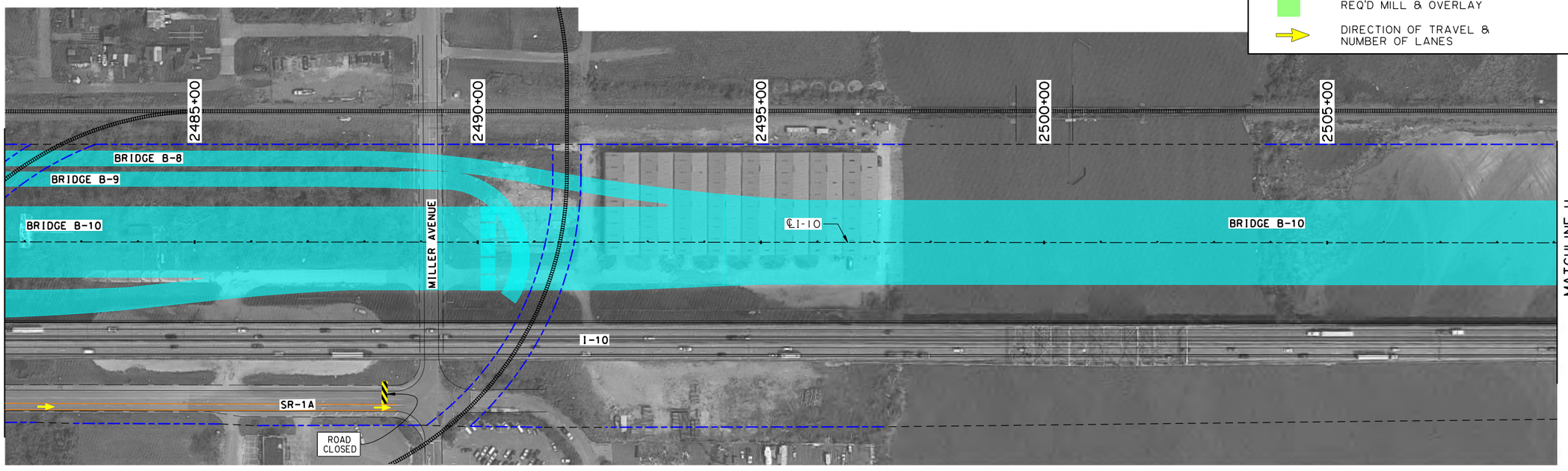

LEGEND

- EXIST. LANE LINE/SHOULDER
- SHIFTED TEMPORARY LANE LINE/SHOULDER
- EXIST. OR REQ'D R/W
- DESIGN BUILD LIMITS
- TEMPORARY CONCRETE BARRIERS
- CONSTRUCTION THIS PHASE
- CONSTRUCTED PREVIOUS PHASE
- REQ'D TEMPORARY PAVEMENT
- REQ'D MILL & OVERLAY
- DIRECTION OF TRAVEL & NUMBER OF LANES

SUGGESTED SEQUENCE OF CONSTRUCTION
PHASE 7

I-10 CALCASIEU RIVER BRIDGE P3

SHEET NUMBER	82

PARISH	CONTROL SECTION	STATE PROJECT
CALCASIEU	450-91	H.003931

DESIGN	CHECK	DETAIL	CHECK	REVIEW	SERIES = 4 OF 7
G. McCALL	M.HELMINGER	M.HELMINGER	G. McCALL		

TECHNICAL PROPOSAL PLANS

PRELIMINARY
NOT FOR CONSTRUCTION

ENGINEER:
GLENN McCALL

LICENSE #:
29639

DATE:
5/25/2023

NO.	DATE	REVISION OR CHANGE ORDER DESCRIPTION	BY

LOUISIANA DEPARTMENT OF TRANSPORTATION & DEVELOPMENT

CBP

TECHNICAL PROPOSAL PLANS

S:\xdrive\HUVAL Projects\7262 (I-10 Calcasieu P3)\05 Drawings\Roadway\Border to Print\XX_MOT_Phase 7.dgn 5/25/2023 2:28:17 PM

S:\xdrive\HUVAL Projects\7262 (I-10 Calcasieu P3)\05 Drawings\Roadway\Border to Print\XX_MOT_Phase 7.dgn
5/25/2023 2:28:20 PM

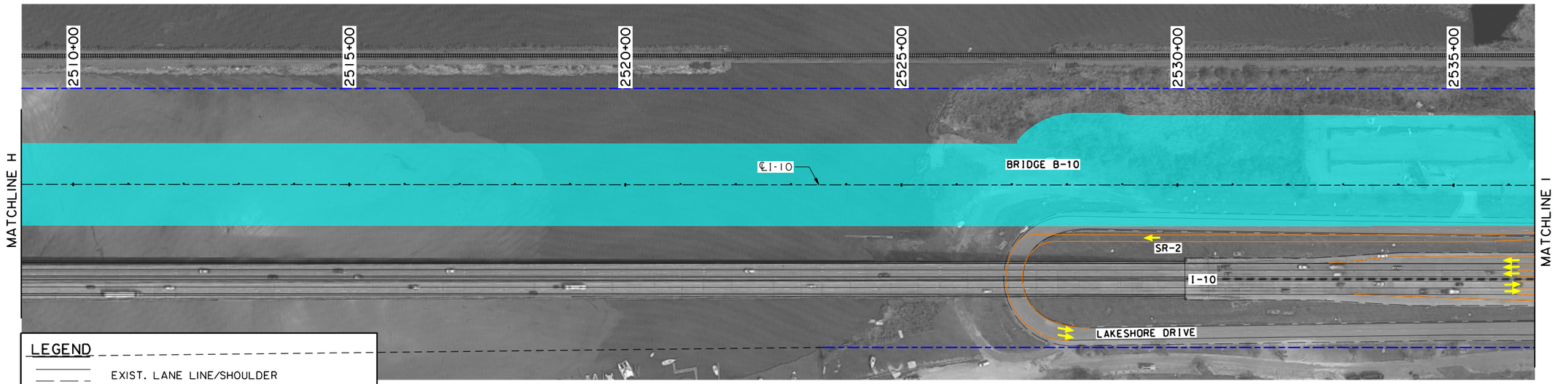

LEGEND

- EXIST. LANE LINE/SHOULDER
- SHIFTED TEMPORARY LANE LINE/SHOULDER
- EXIST. OR REQ'D R/W
- DESIGN BUILD LIMITS
- TEMPORARY CONCRETE BARRIERS
- CONSTRUCTION THIS PHASE
- CONSTRUCTED PREVIOUS PHASE
- REQ'D TEMPORARY PAVEMENT
- REQ'D MILL & OVERLAY
- DIRECTION OF TRAVEL & NUMBER OF LANES

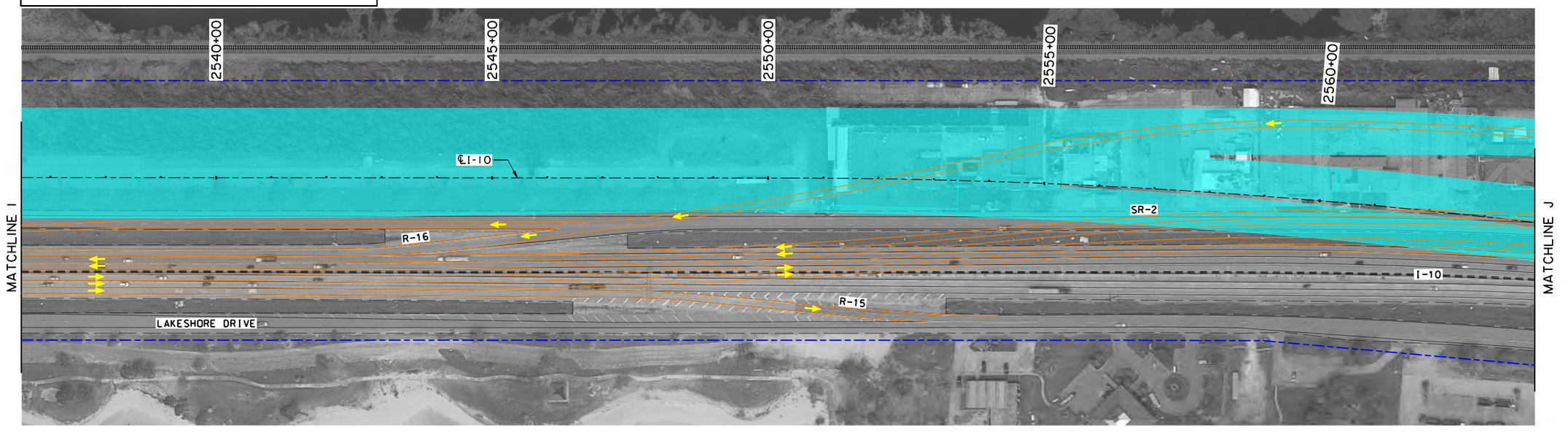

SHEET NUMBER 83

PARISH	CONTROL SECTION	STATE PROJECT
CALCASIEU	450-91	H.003931

	DESIGN	CHECK	DETAIL	CHECK	REVIEW	SERIES
	G. McCALL	M.HELMINGER	M.HELMINGER	G. McCALL		5 OF 7

TECHNICAL PROPOSAL PLANS

PRELIMINARY
NOT FOR CONSTRUCTION

ENGINEER:
GLENN McCALL

LICENSE #:
29639

DATE:
5/25/2023

NO.	DATE	REVISION OR CHANGE ORDER DESCRIPTION	BY

SUGGESTED SEQUENCE OF CONSTRUCTION

PHASE 7

I-10 CALCASIEU RIVER BRIDGE P3

DOTD LOUISIANA DEPARTMENT OF TRANSPORTATION & DEVELOPMENT

CBP

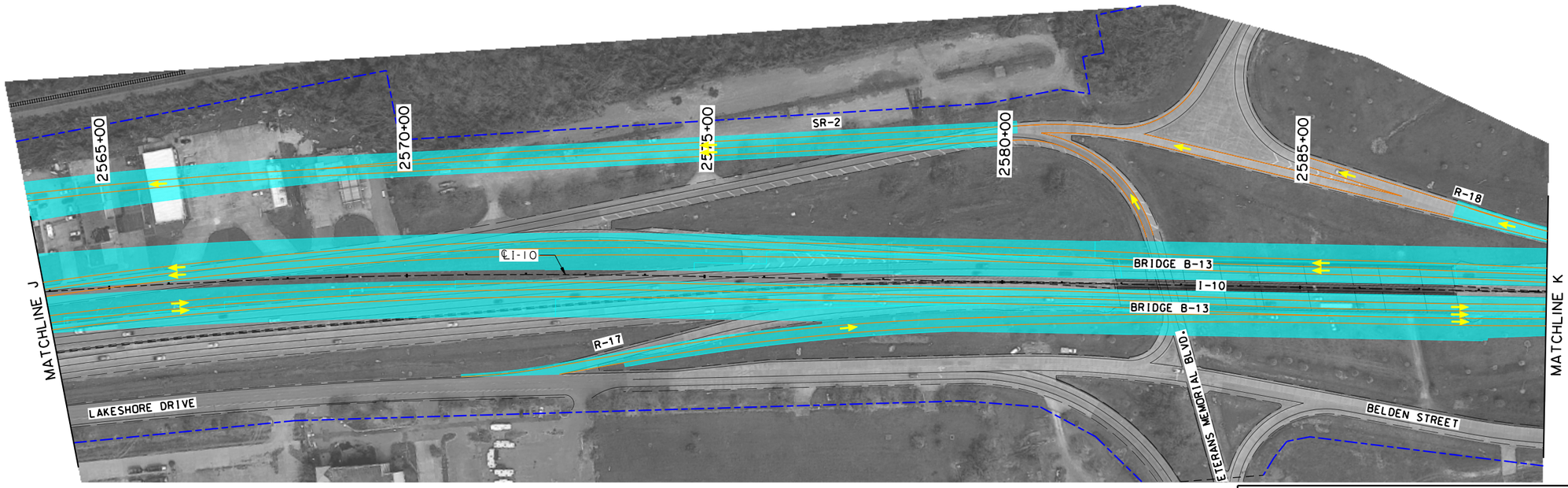

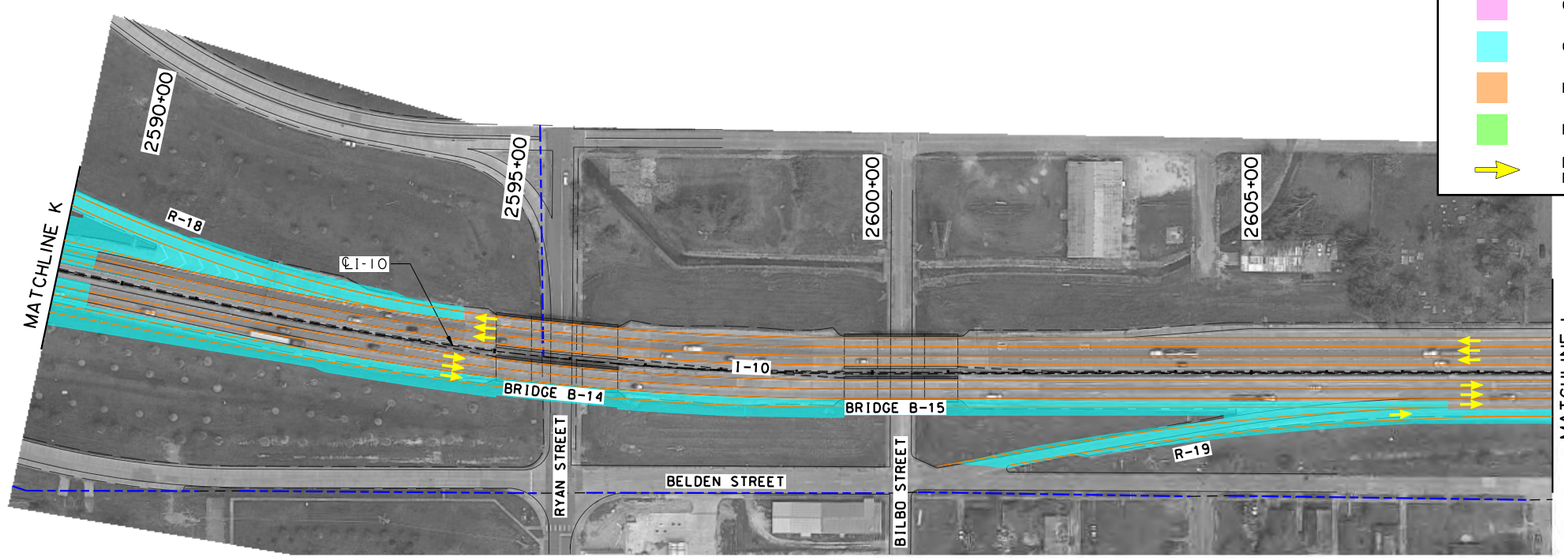

N

N

LEGEND

- EXIST. LANE LINE/SHOULDER
- SHIFTED TEMPORARY LANE LINE/SHOULDER
- EXIST. OR REQ'D R/W
- DESIGN BUILD LIMITS
- TEMPORARY CONCRETE BARRIERS
- CONSTRUCTION THIS PHASE
- CONSTRUCTED PREVIOUS PHASE
- REQ'D TEMPORARY PAVEMENT
- REQ'D MILL & OVERLAY
- DIRECTION OF TRAVEL & NUMBER OF LANES

SUGGESTED SEQUENCE OF CONSTRUCTION

PHASE 7

I-10 CALCASIEU RIVER BRIDGE P3

SHEET NUMBER	84
PARISH	CALCASIEU
CONTROL SECTION	450-91
STATE PROJECT	H.003393 I

DESIGN	G. McCALL	REVIEW	
CHECK	M.HELMINGER	SERIES =	6 OF 7
DETAIL	M.HELMINGER		
CHECK	G. McCALL		

TECHNICAL PROPOSAL PLANS

PRELIMINARY
NOT FOR CONSTRUCTION

ENGINEER:
GLENN McCALL

LICENSE #:
29639

DATE:
5/25/2023

NO.	DATE	REVISION OR CHANGE ORDER DESCRIPTION	BY

DOTD LOUISIANA DEPARTMENT OF TRANSPORTATION & DEVELOPMENT

CBP CALCASIEU BRIDGE PARTNERS

TECHNICAL PROPOSAL PLANS

5/25/2023 2:28:22 PM

S:\xdrive\HUVAL Projects\7262 (I-10 Calcasieu P3)\05 Drawings\Roadway\Border to Print\XX_MOT_Phase 7.dgn

S:\xdrive\HUVAL Projects\7262 (I-10 Calcasieu P3)\05 Drawings\Roadway\Border to Print\XX_MOT_Phase 7.dgn 5/25/2023 2:28:24 PM

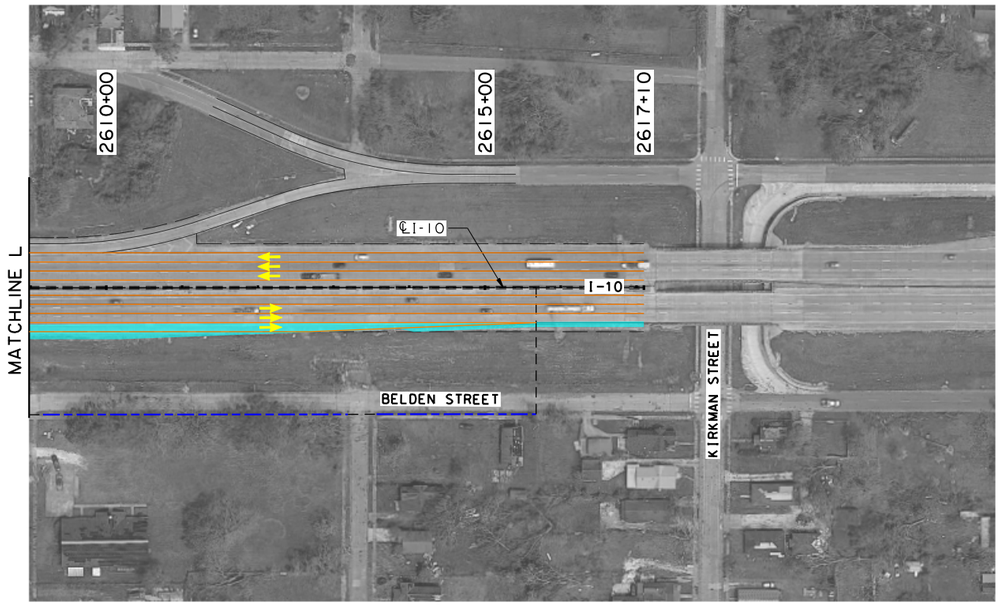

N

MATCHLINE N (SHEET 1 OF 7)

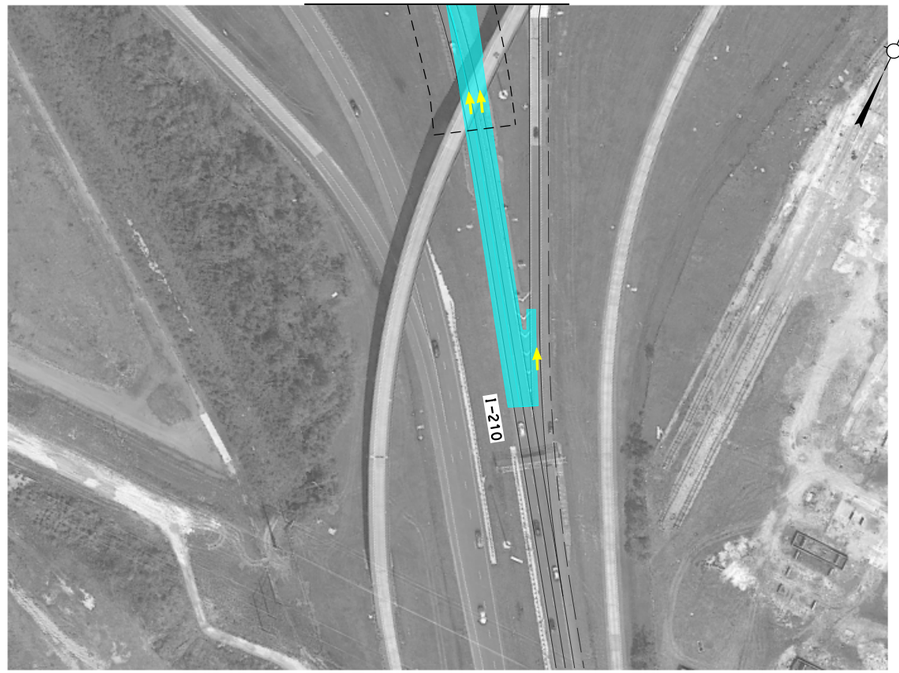

N

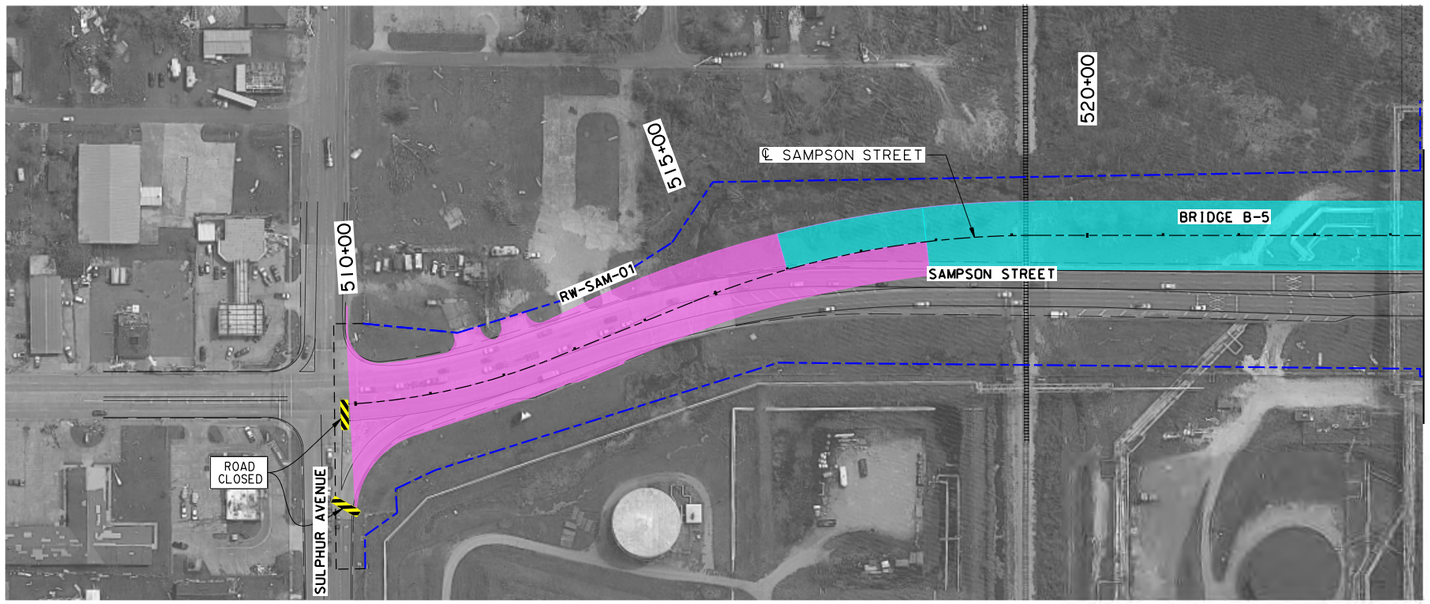

MATCHLINE M (SHEET 4 OF 7)

N

LEGEND

- EXIST. LANE LINE/SHOULDER
- SHIFTED TEMPORARY LANE LINE/SHOULDER
- EXIST. OR REQ'D R/W
- DESIGN BUILD LIMITS
- TEMPORARY CONCRETE BARRIERS
- CONSTRUCTION THIS PHASE
- CONSTRUCTED PREVIOUS PHASE
- REQ'D TEMPORARY PAVEMENT
- REQ'D MILL & OVERLAY
- DIRECTION OF TRAVEL & NUMBER OF LANES

SHEET NUMBER 85

PARISH	CONTROL SECTION	STATE PROJECT
CALCASIEU	450-91	H.003931

DESIGN	G. McCALL	DETAIL	M.HELLMINGER	REVIEW	SERIES # 7 OF 7
CHECK	M.HELLMINGER	CHECK	G. McCALL		

TECHNICAL PROPOSAL PLANS

PRELIMINARY
NOT FOR CONSTRUCTION

ENGINEER:
GLENN McCALL

LICENSE #:
29639

DATE:
5/25/2023

NO.	DATE	REVISION OR CHANGE ORDER DESCRIPTION	BY

SUGGESTED SEQUENCE OF CONSTRUCTION
PHASE 7

I-10 CALCASIEU RIVER BRIDGE P3

TECHNICAL PROPOSAL PLANS
S:\xdrive\HUVAL Projects\7262 (I-10 Calcasieu P3)\05 Drawings\Roadway\Border to Print\XX_MOT_Phase 8.dgn
5/25/2023 2:28:27 PM

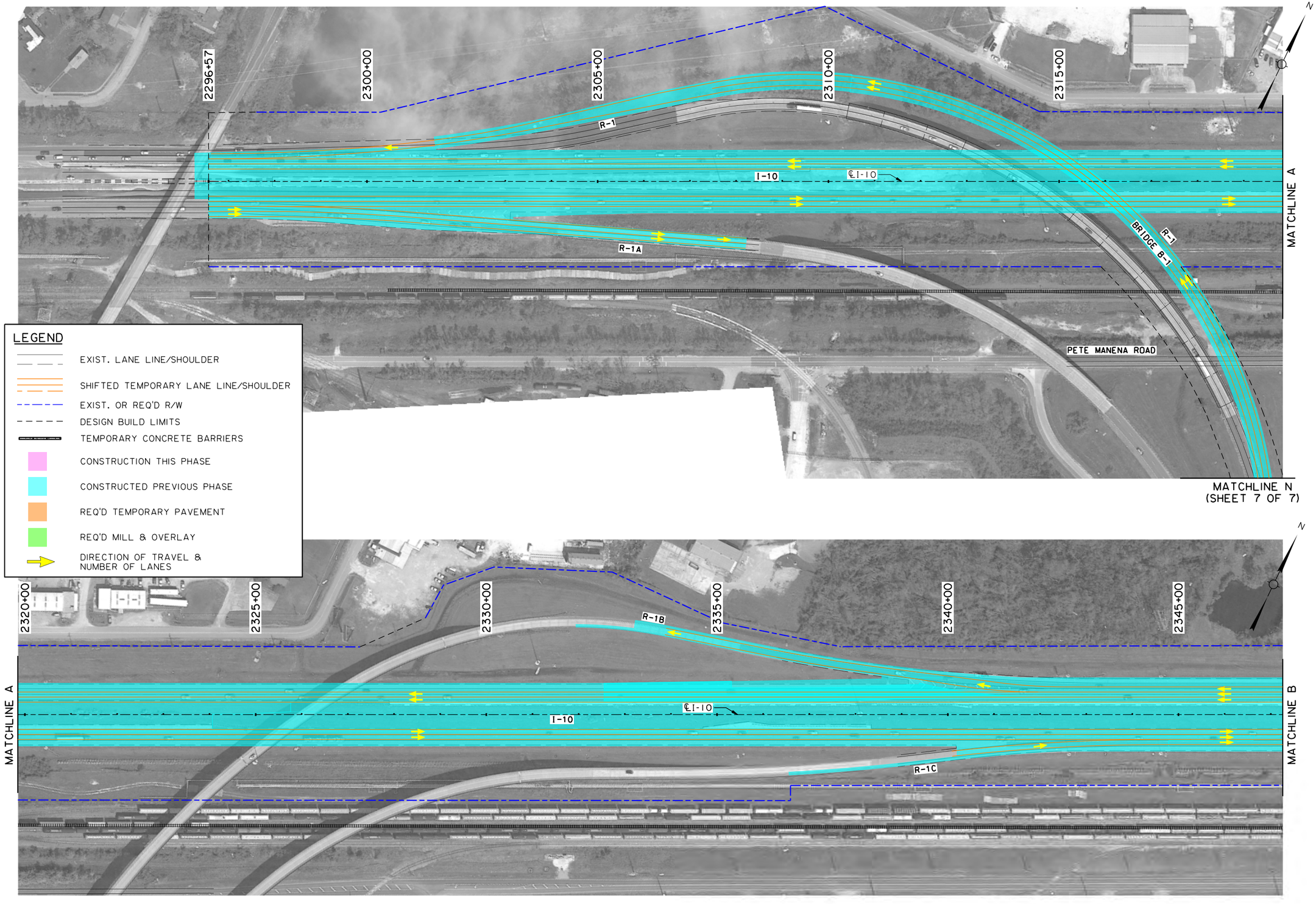

SHEET NUMBER	86

PARISH	CONTROL SECTION	STATE PROJECT
CALCASIEU	450-91	H.003931

DESIGN	G. McCALL	DETAIL	M.HELMINGER	REVIEW	SERIES # 1 OF 7
CHECK	M.HELMINGER	CHECK	G. McCALL		

TECHNICAL PROPOSAL PLANS

PRELIMINARY
NOT FOR CONSTRUCTION

ENGINEER:
GLENN McCALL

LICENSE #:
29639

DATE:
5/25/2023

NO.	DATE	REVISION OR CHANGE ORDER DESCRIPTION	BY

STATE OF LOUISIANA
DEPARTMENT OF TRANSPORTATION AND DEVELOPMENT

SUGGESTED SEQUENCE OF CONSTRUCTION

PHASE 8

I-10 CALCASIEU RIVER BRIDGE P3

DOTD
LOUISIANA DEPARTMENT OF TRANSPORTATION & DEVELOPMENT

CBP

S:\xdrive\HUVAL Projects\7262 (I-10 Calcasieu P3)\05 Drawings\Roadway\Border to Print\XX_MOT_Phase 8.dgn
5/25/2023 2:28:30 PM

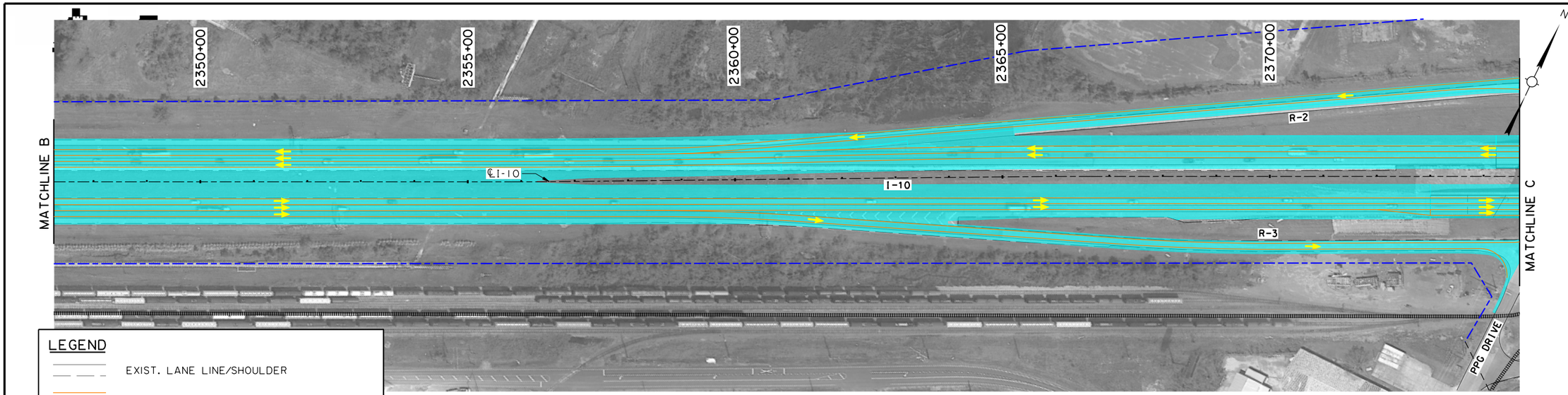

LEGEND

- EXIST. LANE LINE/SHOULDER
- SHIFTED TEMPORARY LANE LINE/SHOULDER
- EXIST. OR REQ'D R/W
- DESIGN BUILD LIMITS
- TEMPORARY CONCRETE BARRIERS
- CONSTRUCTION THIS PHASE
- CONSTRUCTED PREVIOUS PHASE
- REQ'D TEMPORARY PAVEMENT
- REQ'D MILL & OVERLAY
- DIRECTION OF TRAVEL & NUMBER OF LANES

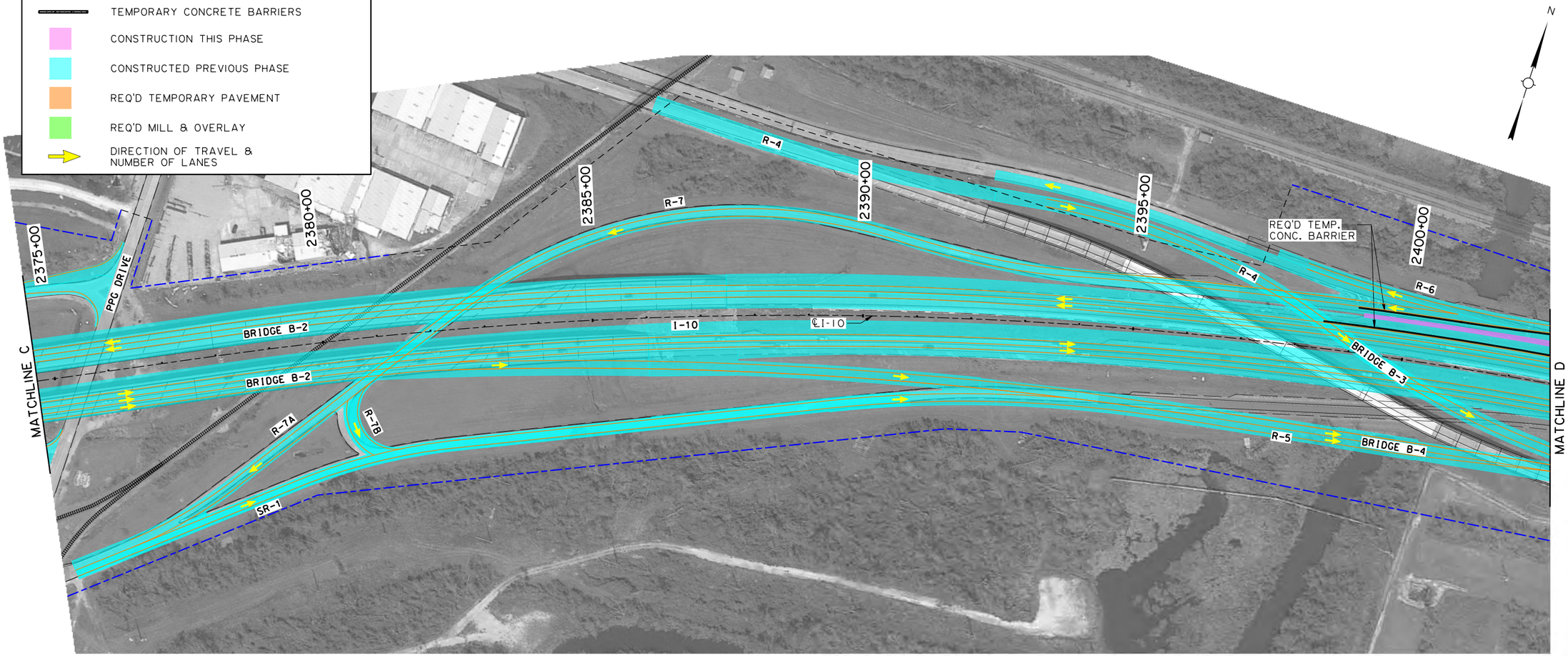

SUGGESTED SEQUENCE OF CONSTRUCTION
PHASE 8

I-10 CALCASIEU RIVER BRIDGE P3

SHEET NUMBER	87

PARISH	CONTROL SECTION	STATE PROJECT
CALCASIEU	450-91	H.003931

DESIGN	G. McCALL	DETAIL	M.HELMINGER	REVIEW	SERIES # 2 OF 7
CHECK	M.HELMINGER	CHECK	G. McCALL		

TECHNICAL PROPOSAL PLANS
PRELIMINARY
NOT FOR CONSTRUCTION
ENGINEER:
GLENN McCALL
LICENSE #:
29639
DATE:
5/25/2023

NO.	DATE	REVISION OR CHANGE ORDER DESCRIPTION	BY

S:\xdrive\HUVAL Projects\7262 (I-10 Calcasieu P3)\05 Drawings\Roadway\Border to Print\XX_MOT_Phase 8.dgn 5/25/2023 2:28:32 PM

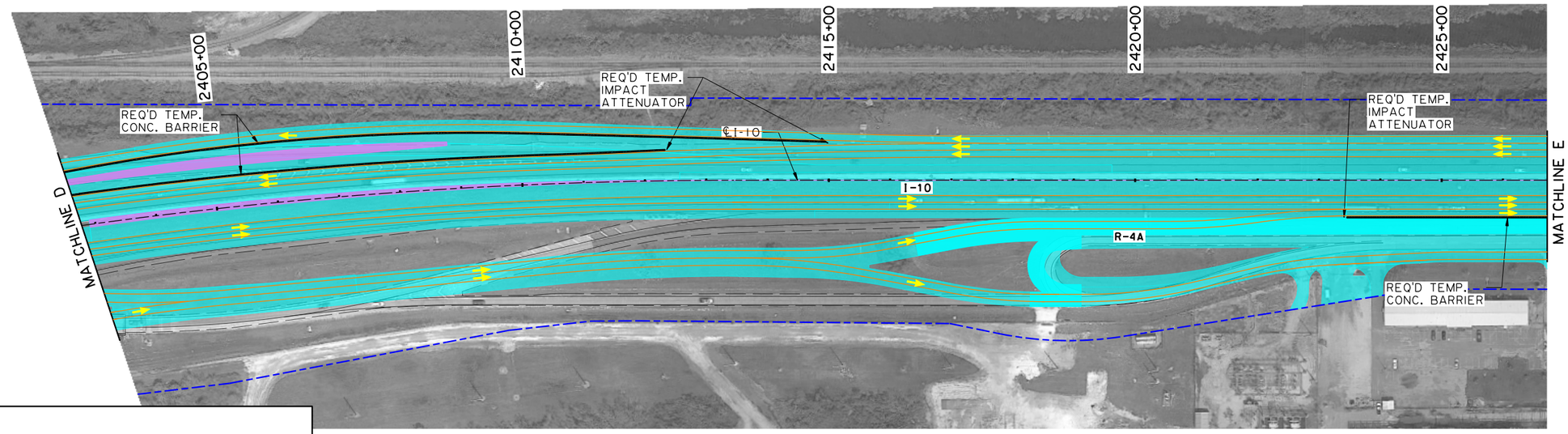

N

LEGEND

- EXIST. LANE LINE/SHOULDER
- SHIFTED TEMPORARY LANE LINE/SHOULDER
- EXIST. OR REQ'D R/W
- DESIGN BUILD LIMITS
- TEMPORARY CONCRETE BARRIERS
- CONSTRUCTION THIS PHASE
- CONSTRUCTED PREVIOUS PHASE
- REQ'D TEMPORARY PAVEMENT
- REQ'D MILL & OVERLAY
- DIRECTION OF TRAVEL & NUMBER OF LANES

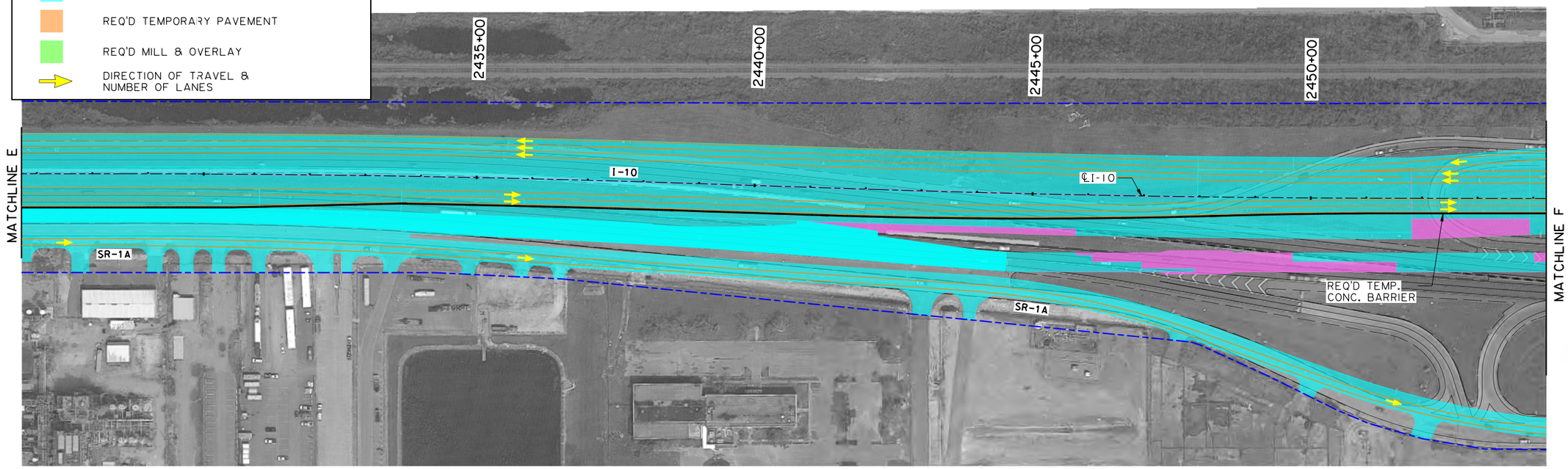

N

SHEET NUMBER	88
PARISH	CALCASIEU
CONTROL SECTION	450-91
STATE PROJECT	H.003931
DESIGN	G. McCALL
CHECK	M.HELMINGER
DETAIL	M.HELMINGER
CHECK	G. McCALL
REVIEW	
SERIES #	3 OF 7

TECHNICAL PROPOSAL PLANS

PRELIMINARY
NOT FOR CONSTRUCTION

ENGINEER:
GLENN McCALL

LICENSE #:
29639

DATE:
5/25/2023

NO.	DATE	REVISION OR CHANGE ORDER DESCRIPTION	BY

SUGGESTED SEQUENCE OF CONSTRUCTION

PHASE 8

I-10 CALCASIEU RIVER BRIDGE P3

LOUISIANA DEPARTMENT OF TRANSPORTATION & DEVELOPMENT

MATCHLINE M (SHEET 7 OF 7)

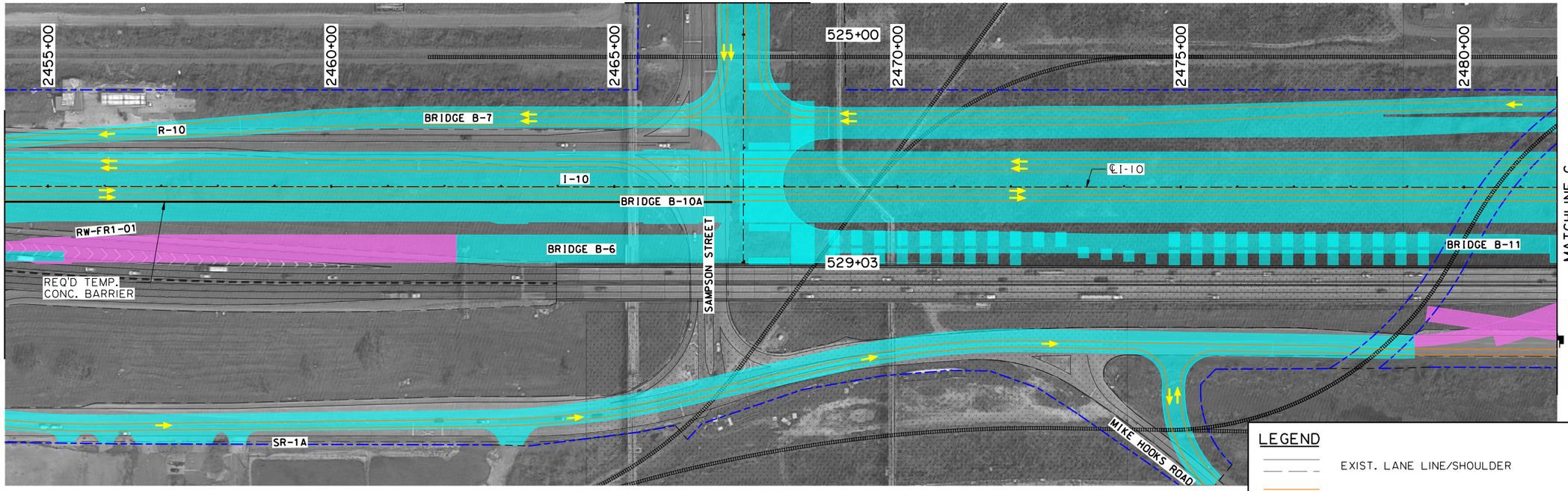

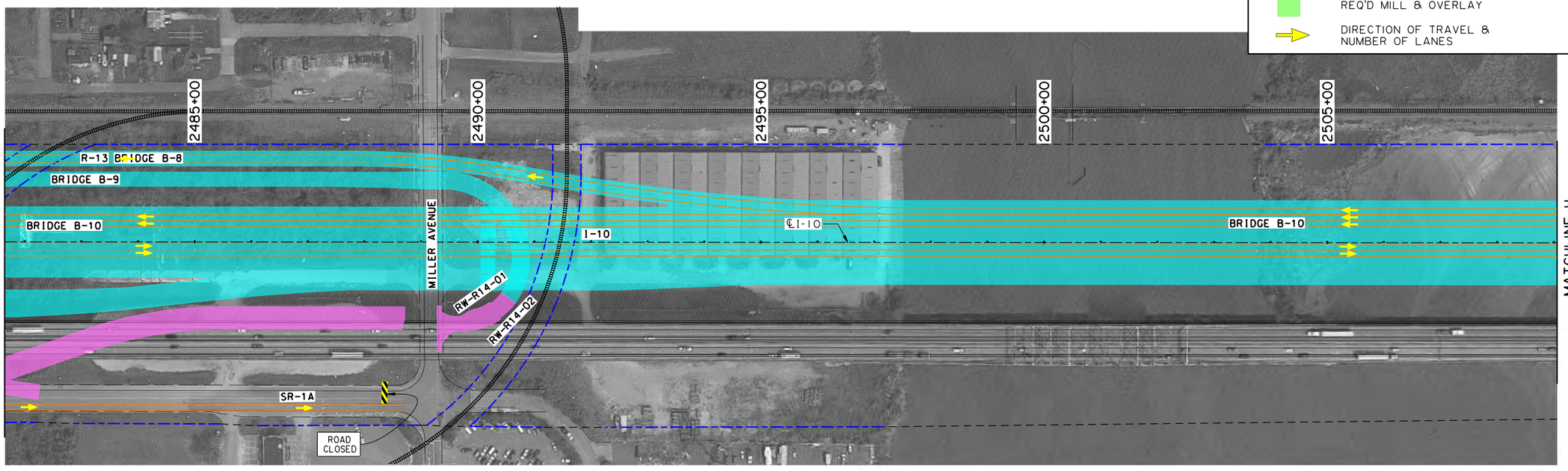

LEGEND

- EXIST. LANE LINE/SHOULDER
- SHIFTED TEMPORARY LANE LINE/SHOULDER
- EXIST. OR REQ'D R/W
- DESIGN BUILD LIMITS
- TEMPORARY CONCRETE BARRIERS
- CONSTRUCTION THIS PHASE
- CONSTRUCTED PREVIOUS PHASE
- REQ'D TEMPORARY PAVEMENT
- REQ'D MILL & OVERLAY
- DIRECTION OF TRAVEL & NUMBER OF LANES

SUGGESTED SEQUENCE OF CONSTRUCTION
PHASE 8

I-10 CALCASIEU RIVER BRIDGE P3

SHEET NUMBER	89
PARISH	CALCASIEU
CONTROL SECTION	450-91
STATE PROJECT	H.003931

DESIGN	G. McCALL
CHECK	M.HELMINGER
DETAIL	M.HELMINGER
CHECK	G. McCALL
REVIEW	
SERIES =	4 OF 7

TECHNICAL PROPOSAL PLANS

PRELIMINARY
NOT FOR CONSTRUCTION

ENGINEER:
GLENN McCALL

LICENSE #:
29639

DATE:
5/25/2023

NO.	DATE	REVISION OR CHANGE ORDER DESCRIPTION	BY

LOUISIANA DEPARTMENT OF TRANSPORTATION & DEVELOPMENT

CBP COLUMBIA BRIDGE PARTNERS

TECHNICAL PROPOSAL PLANS

5/25/2023 2:28:34 PM

S:\xdrive\HUVAL Projects\7262 (I-10 Calcasieu P3)\05 Drawings\Roadway\Border to Print\XX_MOT_Phase 8.dgn

TECHNICAL PROPOSAL PLANS
S:\xdrive\HUVAL Projects\7262 (I-10 Calcasieu P3)\05 Drawings\Roadway\Border to Print\XX_MOT_Phase 8.dgn
5/25/2023 2:28:37 PM

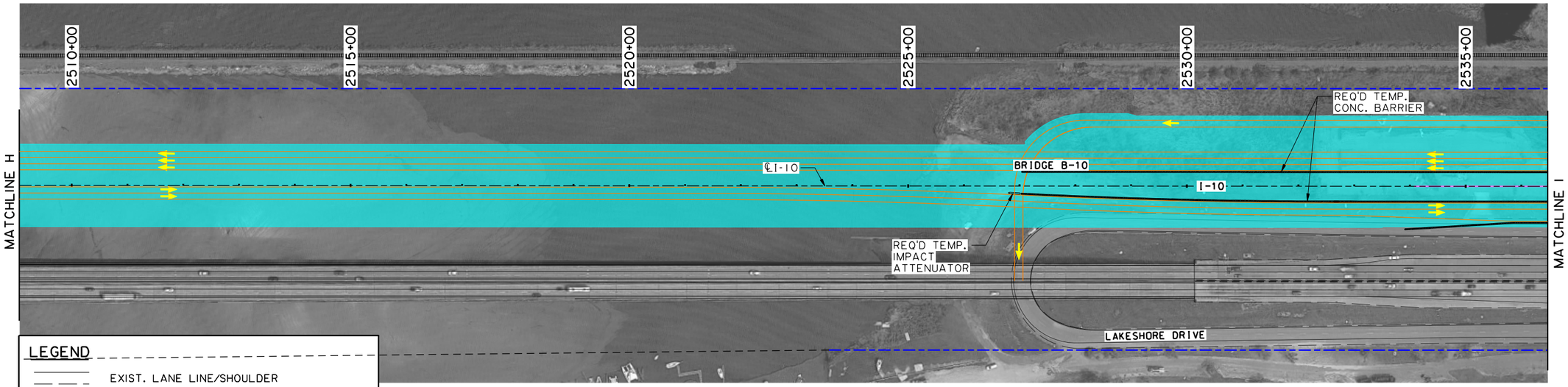

LEGEND

- EXIST. LANE LINE/SHOULDER
- SHIFTED TEMPORARY LANE LINE/SHOULDER
- EXIST. OR REQ'D R/W
- DESIGN BUILD LIMITS
- TEMPORARY CONCRETE BARRIERS
- CONSTRUCTION THIS PHASE
- CONSTRUCTED PREVIOUS PHASE
- REQ'D TEMPORARY PAVEMENT
- REQ'D MILL & OVERLAY
- DIRECTION OF TRAVEL & NUMBER OF LANES

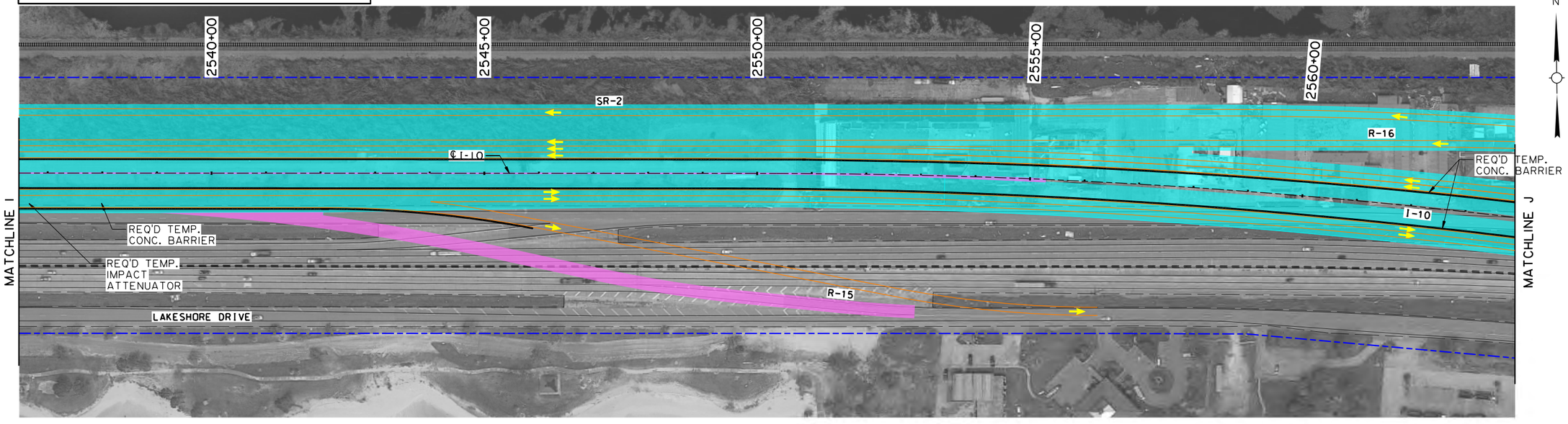

SHEET NUMBER 90

PARISH	CONTROL SECTION	STATE PROJECT
CALCASIEU	450-91	H.003931

	DESIGN	CHECK	DETAIL	CHECK	REVIEW	SERIES
	G. McCALL	M.HELMINGER	M.HELMINGER	G. McCALL		5 OF 7

TECHNICAL PROPOSAL PLANS
PRELIMINARY
NOT FOR CONSTRUCTION
ENGINEER:
GLENN McCALL
LICENSE #:
29639
DATE:
5/25/2023

NO.	DATE	REVISION OR CHANGE ORDER DESCRIPTION	BY

STATE OF LOUISIANA
DEPARTMENT OF TRANSPORTATION AND DEVELOPMENT

SUGGESTED SEQUENCE OF CONSTRUCTION
PHASE 8

I-10 CALCASIEU RIVER BRIDGE P3

DOTD
LOUISIANA DEPARTMENT OF TRANSPORTATION & DEVELOPMENT

CBP

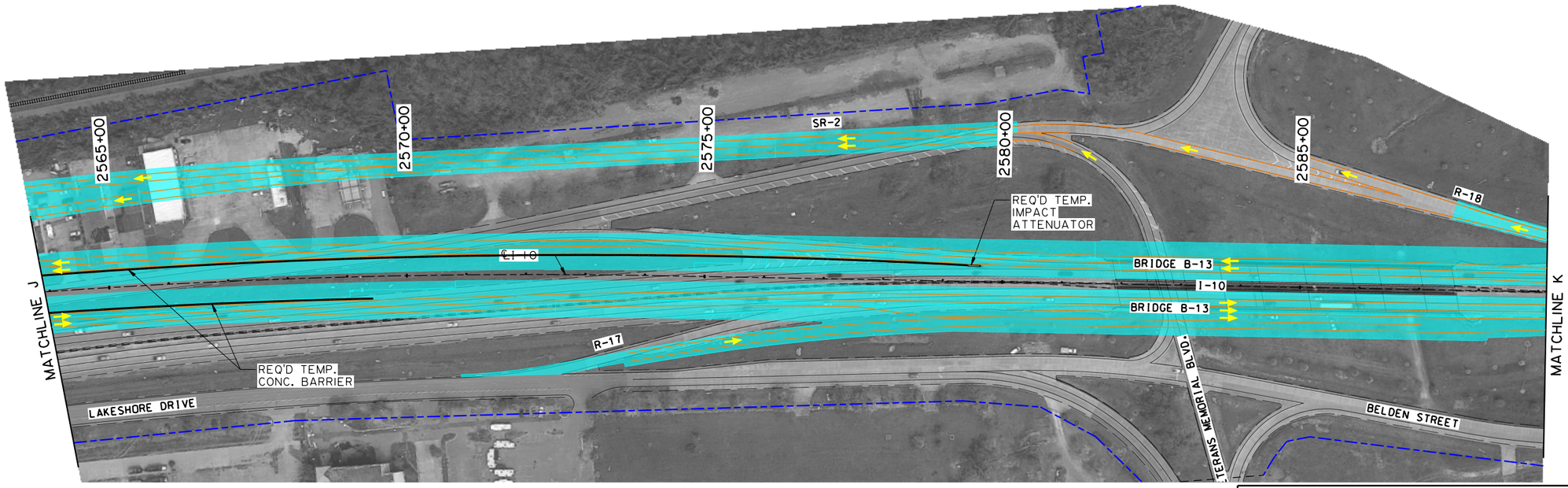

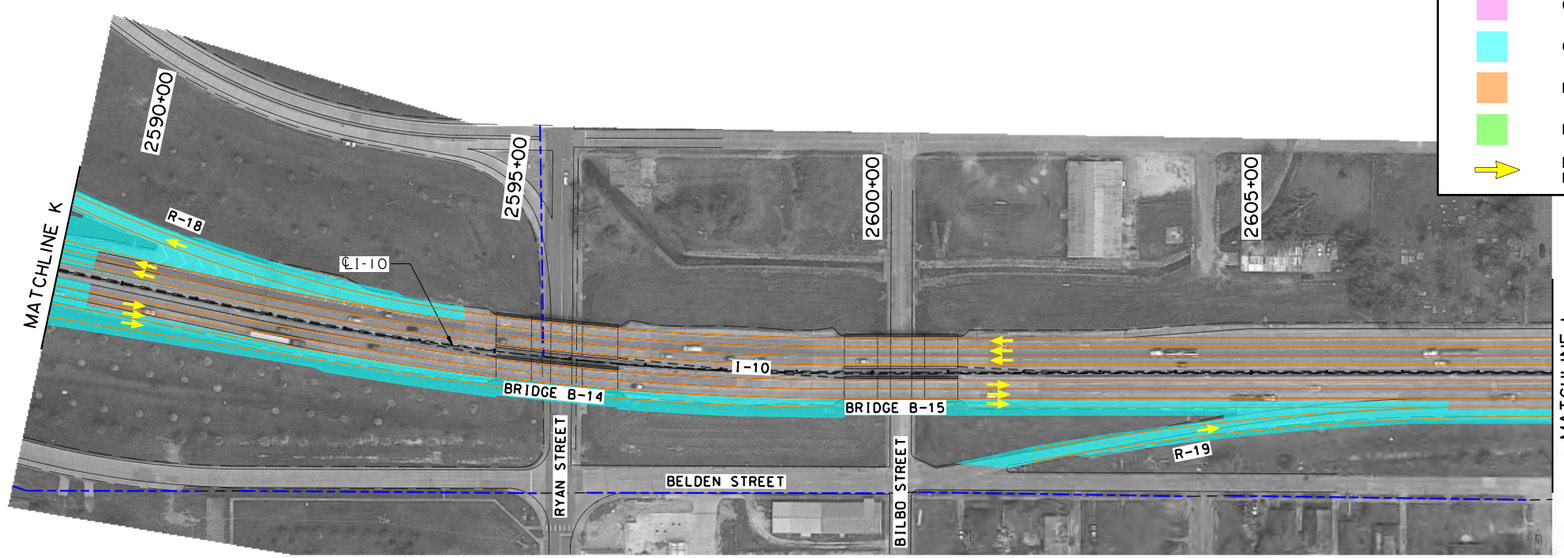

LEGEND

- EXIST. LANE LINE/SHOULDER
- SHIFTED TEMPORARY LANE LINE/SHOULDER
- EXIST. OR REQ'D R/W
- DESIGN BUILD LIMITS
- TEMPORARY CONCRETE BARRIERS
- CONSTRUCTION THIS PHASE
- CONSTRUCTED PREVIOUS PHASE
- REQ'D TEMPORARY PAVEMENT
- REQ'D MILL & OVERLAY
- DIRECTION OF TRAVEL & NUMBER OF LANES

SHEET NUMBER 91

PARISH	CONTROL SECTION	STATE PROJECT
CALCASIEU	450-91	H.003931

DESIGN	G. McCALL	DETAIL	M.HELMINGER	
CHECK	M.HELMINGER	CHECK	G. McCALL	
REVIEW		SERIES #	6 OF 7	

TECHNICAL PROPOSAL PLANS

PRELIMINARY
NOT FOR CONSTRUCTION
ENGINEER: GLENN McCALL
LICENSE #: 29639
DATE: 5/25/2023

NO.	DATE	REVISION OR CHANGE ORDER DESCRIPTION	BY

STATE OF LOUISIANA
DEPARTMENT OF TRANSPORTATION AND DEVELOPMENT

SUGGESTED SEQUENCE OF CONSTRUCTION

PHASE 8

I-10 CALCASIEU RIVER BRIDGE P3

DOTD LOUISIANA DEPARTMENT OF TRANSPORTATION & DEVELOPMENT

CBP CALCASIEU BRIDGE PARTNERS

TECHNICAL PROPOSAL PLANS

5/25/2023 2:28:39 PM

S:\xdrive\HUVAL Projects\7262 (I-10 Calcasieu P3)\05 Drawings\Roadway\Border to Print\XX_MOT_Phase 8.dgn

S:\xdrive\HUVAL Projects\7262 (I-10 Calcasieu P3)\05 Drawings\Roadway\Border to Print\XX_MOT_Phase 8.dgn
5/25/2023 2:28:42 PM

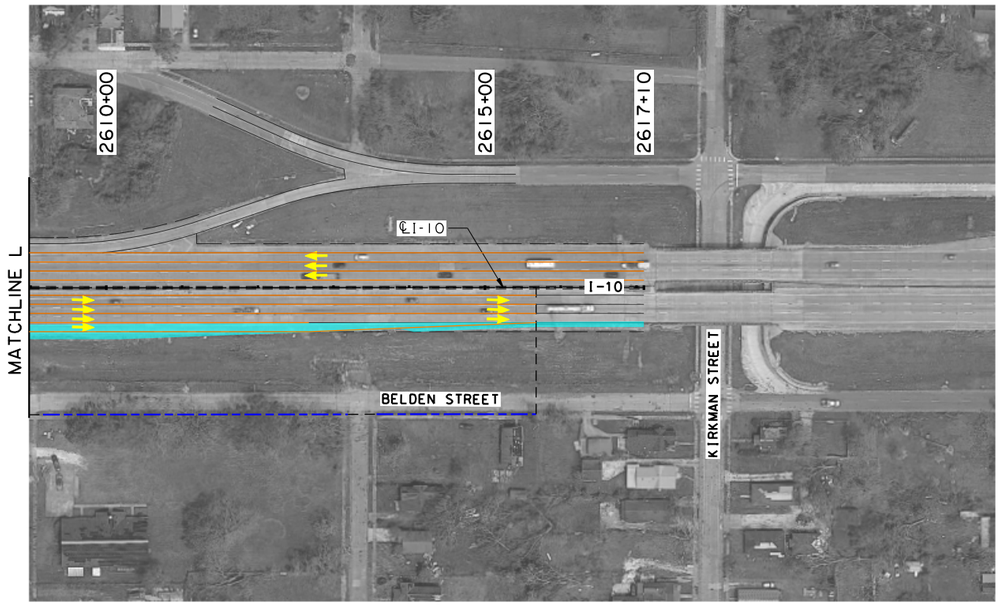

N

MATCHLINE N (SHEET 1 OF 7)

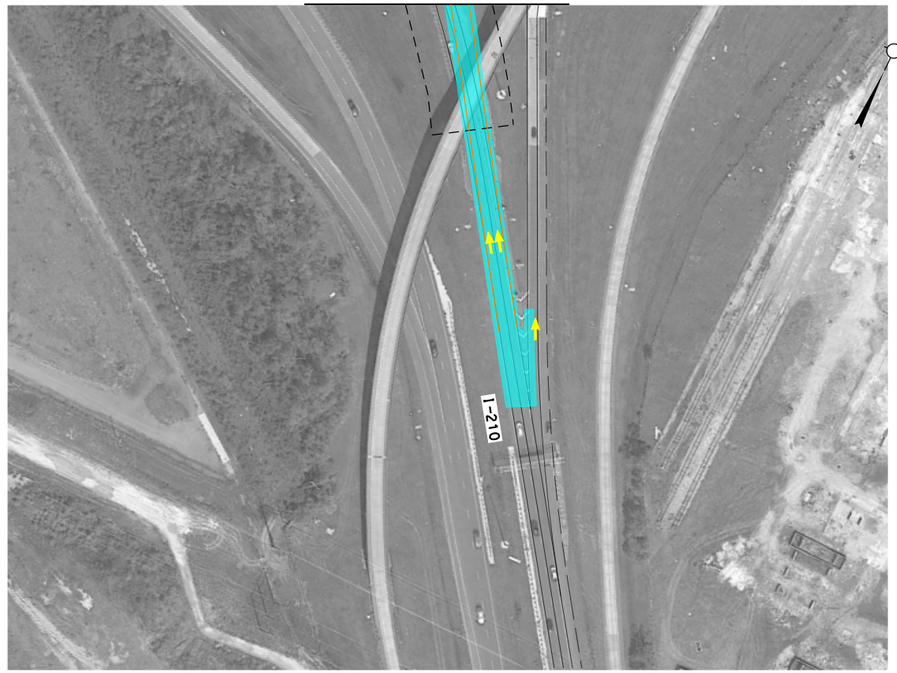

N

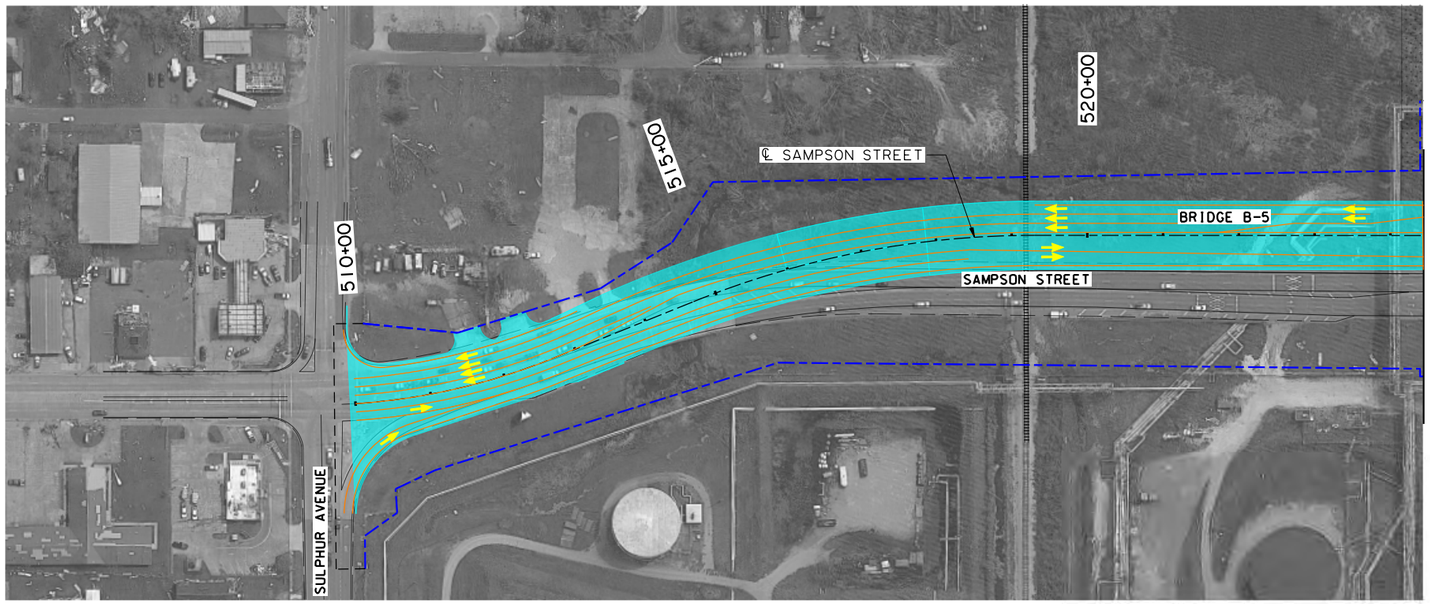

MATCHLINE M
(SHEET 4 OF 7)

LEGEND

- EXIST. LANE LINE/SHOULDER
- SHIFTED TEMPORARY LANE LINE/SHOULDER
- EXIST. OR REQ'D R/W
- DESIGN BUILD LIMITS
- TEMPORARY CONCRETE BARRIERS
- CONSTRUCTION THIS PHASE
- CONSTRUCTED PREVIOUS PHASE
- REQ'D TEMPORARY PAVEMENT
- REQ'D MILL & OVERLAY
- DIRECTION OF TRAVEL & NUMBER OF LANES

SHEET NUMBER	92
PARISH	CALCASIEU
CONTROL SECTION	450-91
STATE PROJECT	H.003931

DESIGN	G. McCALL	REVIEW	7 OF 7
CHECK	M.HELLMINGER	SERIES #	
DETAIL	M.HELLMINGER		
CHECK	G. McCALL		

TECHNICAL PROPOSAL PLANS

PRELIMINARY
NOT FOR CONSTRUCTION

ENGINEER:
GLENN McCALL

LICENSE #:
29639

DATE:
5/25/2023

NO.	DATE	REVISION OR CHANGE ORDER DESCRIPTION	BY

STATE OF LOUISIANA
DEPARTMENT OF TRANSPORTATION AND DEVELOPMENT

SUGGESTED SEQUENCE OF CONSTRUCTION

PHASE 8

I-10 CALCASIEU RIVER BRIDGE P3

DOTD
LOUISIANA DEPARTMENT OF TRANSPORTATION & DEVELOPMENT

CBP
CALCASIEU BRIDGE PARTNERS

S:\xdrive\HUVAL Projects\7262 (I-10 Calcasieu P3)\05 Drawings\Roadway\Border to Print\XX_MOT_Phase 9.dgn
5/25/2023 2:28:45 PM

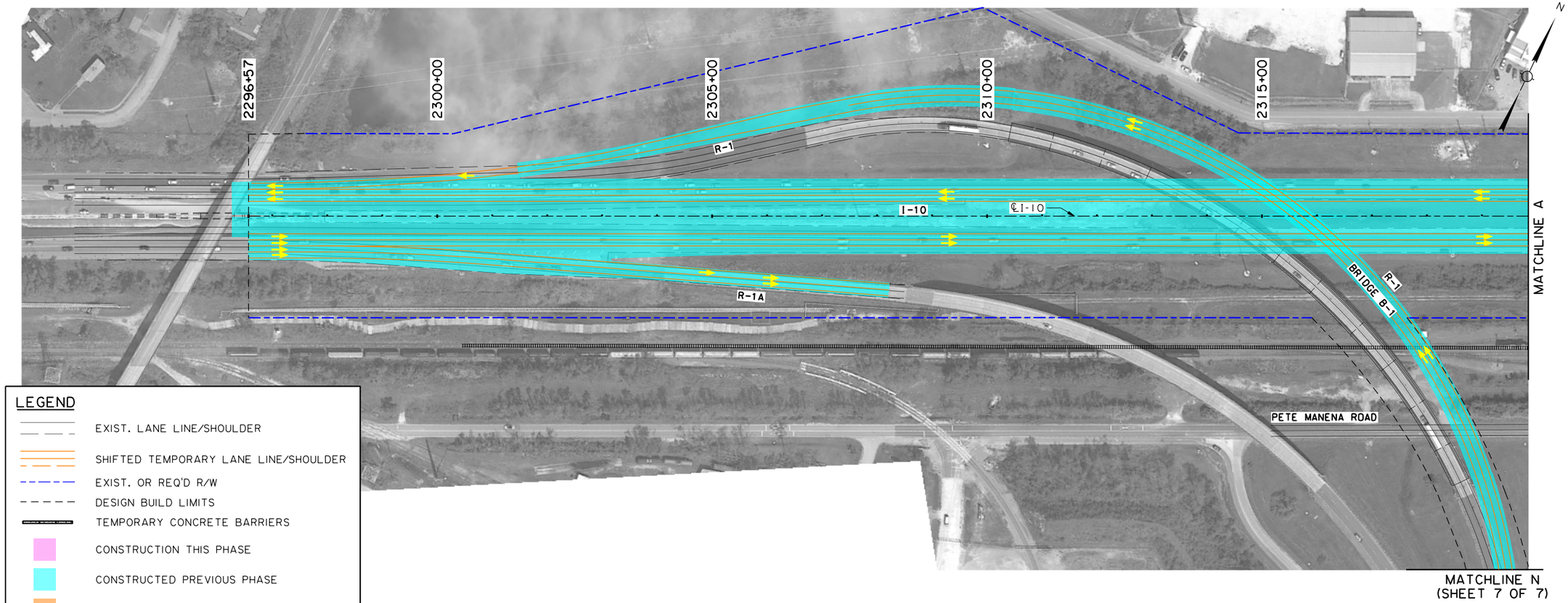

LEGEND

- EXIST. LANE LINE/SHOULDER
- SHIFTED TEMPORARY LANE LINE/SHOULDER
- EXIST. OR REQ'D R/W
- DESIGN BUILD LIMITS
- TEMPORARY CONCRETE BARRIERS
- CONSTRUCTION THIS PHASE
- CONSTRUCTED PREVIOUS PHASE
- REQ'D TEMPORARY PAVEMENT
- REQ'D MILL & OVERLAY
- DIRECTION OF TRAVEL & NUMBER OF LANES

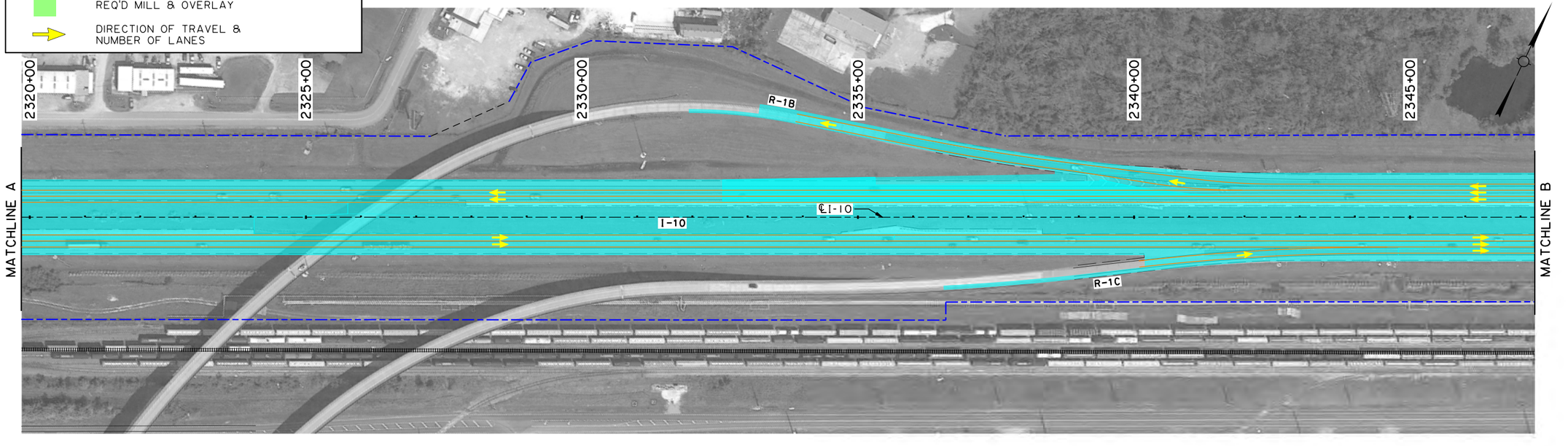

SUGGESTED SEQUENCE OF CONSTRUCTION
PHASE 9

I-10 CALCASIEU RIVER BRIDGE P3

SHEET NUMBER	93

PARISH	CONTROL SECTION	STATE PROJECT
CALCASIEU	450-91	H.003931

DESIGN	G. McCALL	DETAIL	M.HELMINGER	REVIEW	SERIES # 1 OF 7
CHECK	M.HELMINGER	CHECK	G. McCALL		

TECHNICAL PROPOSAL PLANS
PRELIMINARY
NOT FOR CONSTRUCTION
ENGINEER:
GLENN McCALL
LICENSE #:
29639
DATE:
5/25/2023

NO.	DATE	REVISION OR CHANGE ORDER DESCRIPTION	BY

TECHNICAL PROPOSAL PLANS

S:\xdrive\HUVAL Projects\7262 (I-10 Calcasieu P3)\05 Drawings\Roadway\Border to Print\XX_MOT Phase 9.dgn 5/25/2023 2:28:47 PM

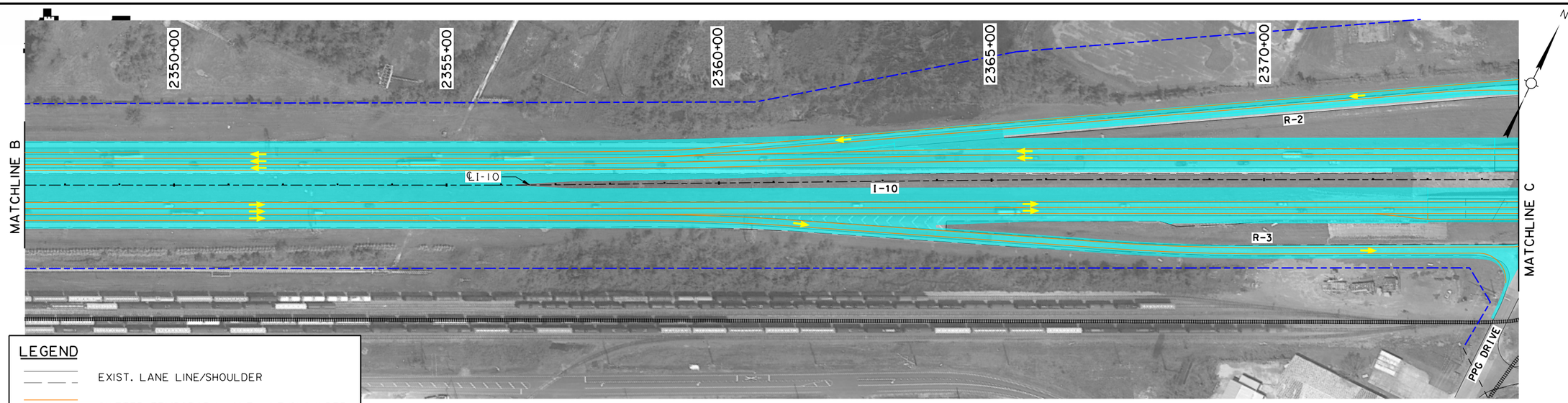

LEGEND

- EXIST. LANE LINE/SHOULDER
- SHIFTED TEMPORARY LANE LINE/SHOULDER
- EXIST. OR REQ'D R/W
- DESIGN BUILD LIMITS
- TEMPORARY CONCRETE BARRIERS
- CONSTRUCTION THIS PHASE
- CONSTRUCTED PREVIOUS PHASE
- REQ'D TEMPORARY PAVEMENT
- REQ'D MILL & OVERLAY
- DIRECTION OF TRAVEL & NUMBER OF LANES

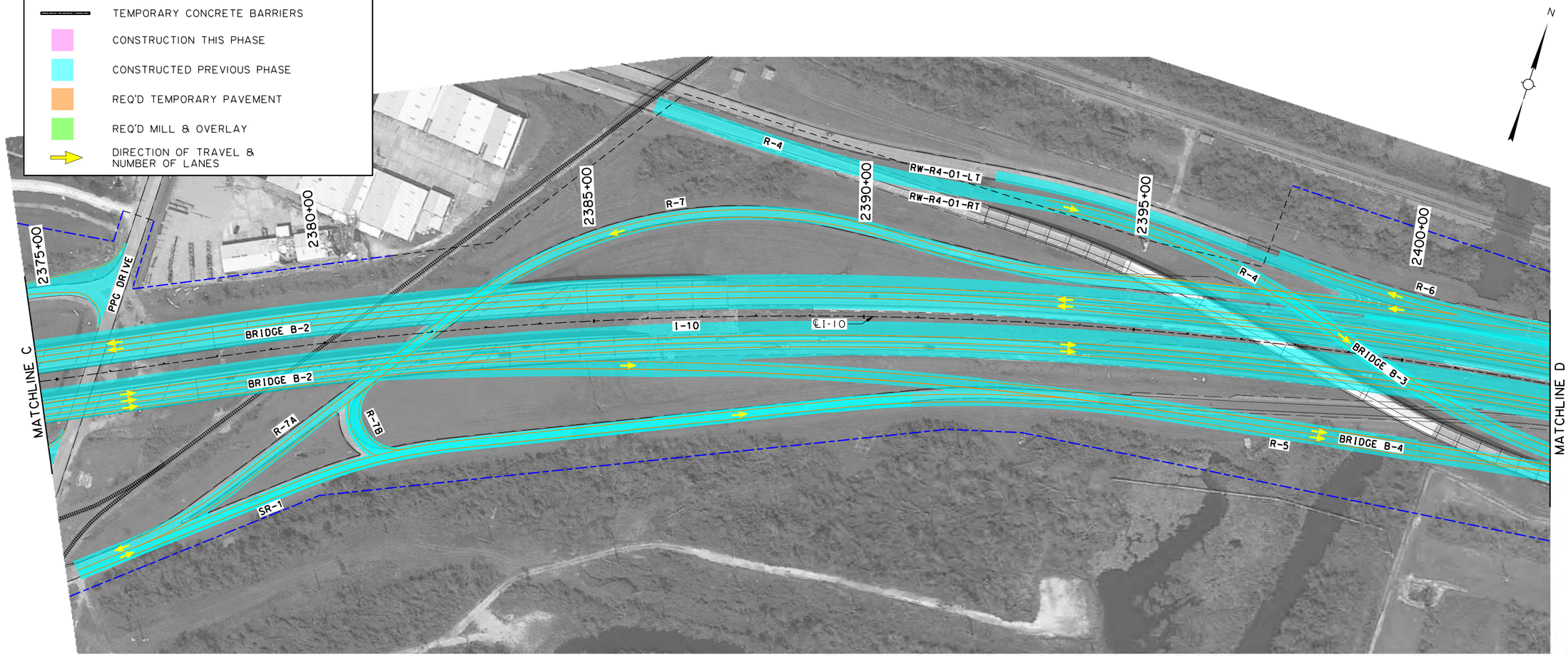

SHEET NUMBER	94

PARISH	CONTROL SECTION	STATE PROJECT
CALCASIEU	450-91	H.003931

DESIGN	G. McCALL	DETAIL	M.HELMINGER	REVIEW	2 OF 7
CHECK	M.HELMINGER	CHECK	G. McCALL	SERIES #	

TECHNICAL PROPOSAL PLANS

PRELIMINARY
NOT FOR CONSTRUCTION

ENGINEER:
GLENN McCALL

LICENSE #:
29639

DATE:
5/25/2023

NO.	DATE	REVISION OR CHANGE ORDER DESCRIPTION	BY

STATE OF LOUISIANA DEPARTMENT OF TRANSPORTATION AND DEVELOPMENT

SUGGESTED SEQUENCE OF CONSTRUCTION

PHASE 9

I-10 CALCASIEU RIVER BRIDGE P3

DOTD LOUISIANA DEPARTMENT OF TRANSPORTATION & DEVELOPMENT

CBP CALCASIEU BRIDGE PARTNERS

S:\xdrive\HUVAL Projects\7262 (I-10 Calcasieu P3)\05 Drawings\Roadway\Border to Print\XX_MOT_Phase 9.dgn 5/25/2023 2:28:49 PM

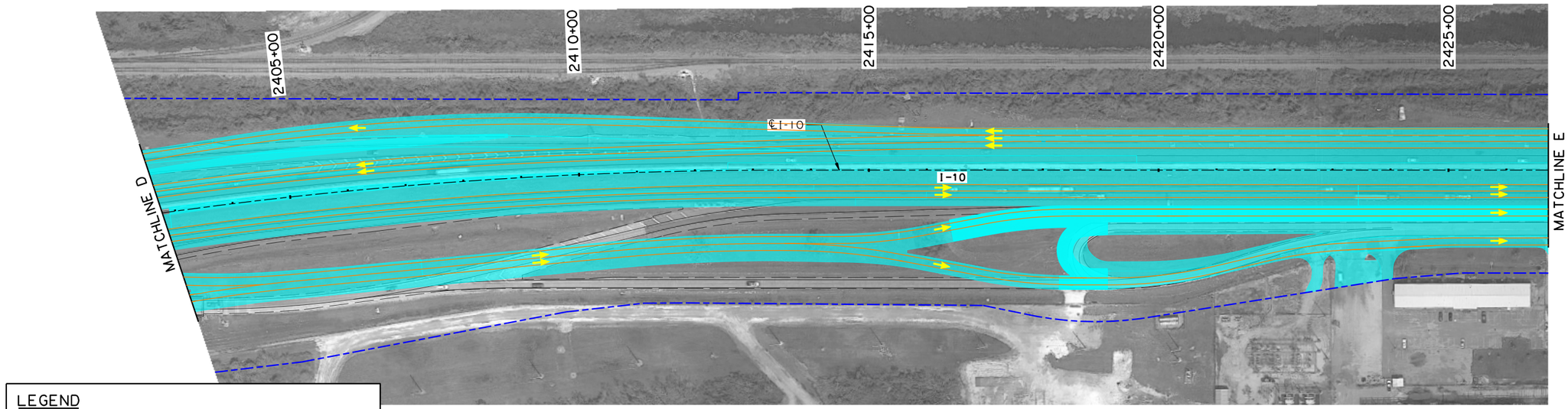

LEGEND

- EXIST. LANE LINE/SHOULDER
- SHIFTED TEMPORARY LANE LINE/SHOULDER
- EXIST. OR REQ'D R/W
- DESIGN BUILD LIMITS
- TEMPORARY CONCRETE BARRIERS
- CONSTRUCTION THIS PHASE
- CONSTRUCTED PREVIOUS PHASE
- REQ'D TEMPORARY PAVEMENT
- REQ'D MILL & OVERLAY
- DIRECTION OF TRAVEL & NUMBER OF LANES

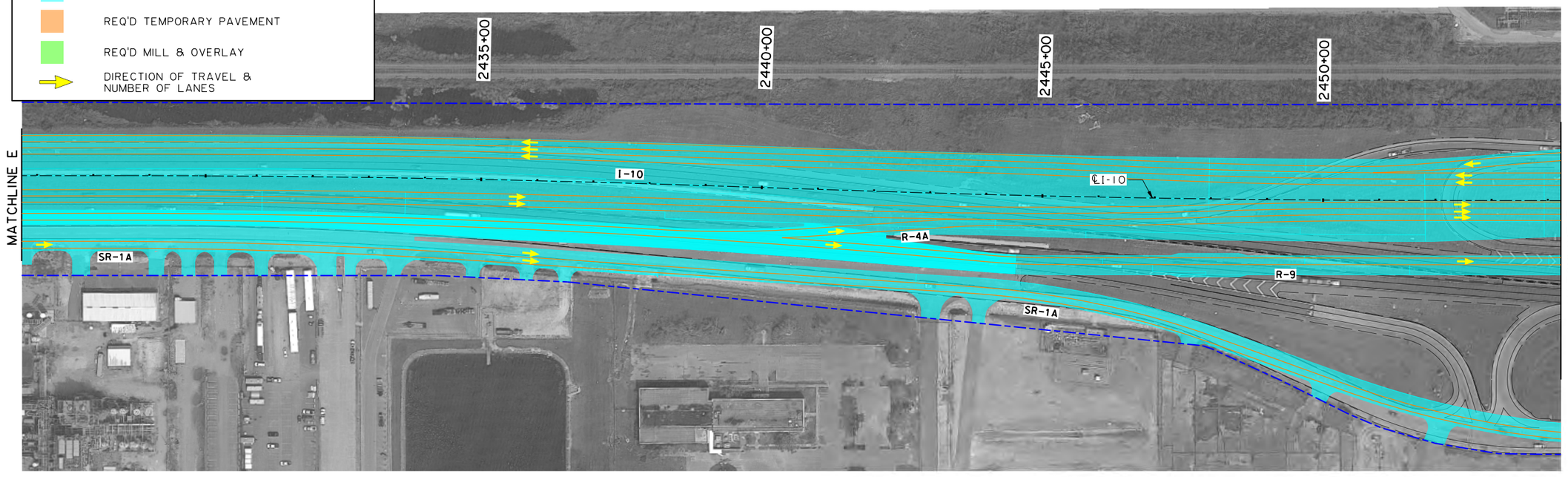

SHEET NUMBER	95

PARISH	CONTROL SECTION	STATE PROJECT
CALCASIEU	450-91	H.003931

DESIGN	CHECK	DETAIL	CHECK	REVIEW	SERIES = 3 OF 7
G. McCALL	M.HELMINGER	M.HELMINGER	G. McCALL		

TECHNICAL PROPOSAL PLANS

PRELIMINARY
NOT FOR CONSTRUCTION

ENGINEER:
GLENN McCALL

LICENSE #:
29639

DATE:
5/25/2023

NO.	DATE	REVISION OR CHANGE ORDER DESCRIPTION	BY

SUGGESTED SEQUENCE OF CONSTRUCTION
PHASE 9

I-10 CALCASIEU RIVER BRIDGE P3

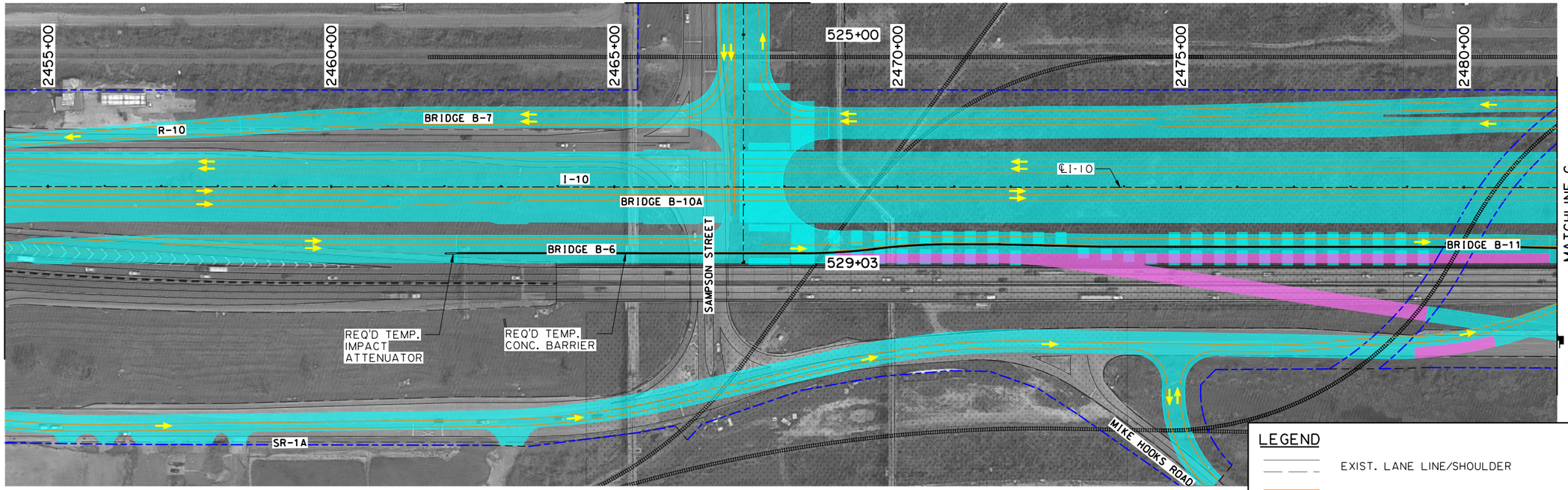

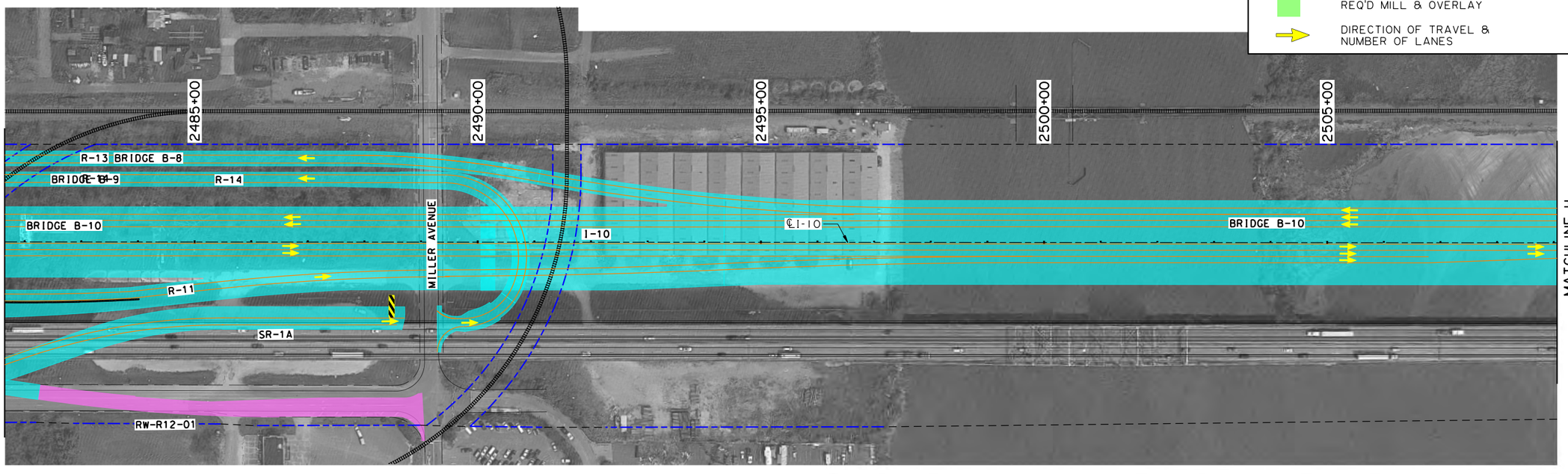

LEGEND

- EXIST. LANE LINE/SHOULDER
- SHIFTED TEMPORARY LANE LINE/SHOULDER
- EXIST. OR REQ'D R/W
- DESIGN BUILD LIMITS
- TEMPORARY CONCRETE BARRIERS
- CONSTRUCTION THIS PHASE
- CONSTRUCTED PREVIOUS PHASE
- REQ'D TEMPORARY PAVEMENT
- REQ'D MILL & OVERLAY
- DIRECTION OF TRAVEL & NUMBER OF LANES

SHEET NUMBER 96

PARISH	CONTROL SECTION	STATE PROJECT
CALCASIEU	450-91	H.003931

	DESIGN	CHECK	DETAIL	CHECK	REVIEW	SERIES
	G. McCALL	M.HELMINGER	M.HELMINGER	G. McCALL		4 OF 7

TECHNICAL PROPOSAL PLANS

PRELIMINARY
NOT FOR CONSTRUCTION

ENGINEER:
GLENN McCALL

LICENSE #:
29639

DATE:
5/25/2023

NO.	DATE	REVISION OR CHANGE ORDER DESCRIPTION	BY

STATE OF LOUISIANA

SUGGESTED SEQUENCE OF CONSTRUCTION

PHASE 9

I-10 CALCASIEU RIVER BRIDGE P3

DOTD LOUISIANA DEPARTMENT OF TRANSPORTATION & DEVELOPMENT

CBP COLORADO BRIDGE PARTNER

TECHNICAL PROPOSAL PLANS

S:\xdrive\HUVAL Projects\7262 (I-10 Calcasieu P3)\05 Drawings\Roadway\Border to Print\XX_MOT_Phase 9.dgn
5/25/2023 2:28:51 PM

5/25/2023 2:28:54 PM

TECHNICAL PROPOSAL PLANS

S:\xdrive\HUVAL Projects\7262 (I-10 Calcasieu P3)\05 Drawings\Roadway\Border to Print\XX_MOT_Phase 9.dgn

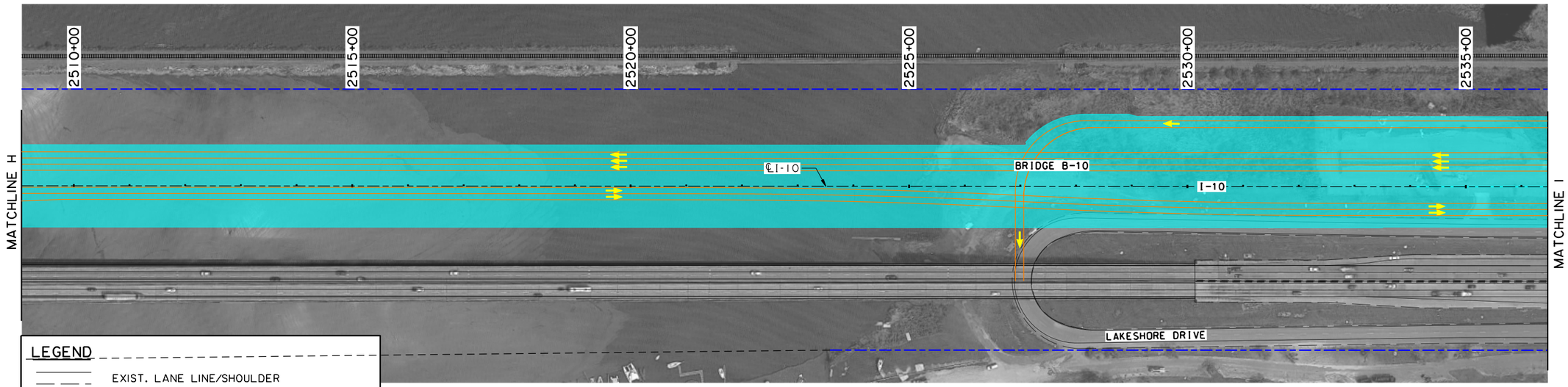

LEGEND

- EXIST. LANE LINE/SHOULDER
- SHIFTED TEMPORARY LANE LINE/SHOULDER
- EXIST. OR REQ'D R/W
- DESIGN BUILD LIMITS
- TEMPORARY CONCRETE BARRIERS
- CONSTRUCTION THIS PHASE
- CONSTRUCTED PREVIOUS PHASE
- REQ'D TEMPORARY PAVEMENT
- REQ'D MILL & OVERLAY
- DIRECTION OF TRAVEL & NUMBER OF LANES

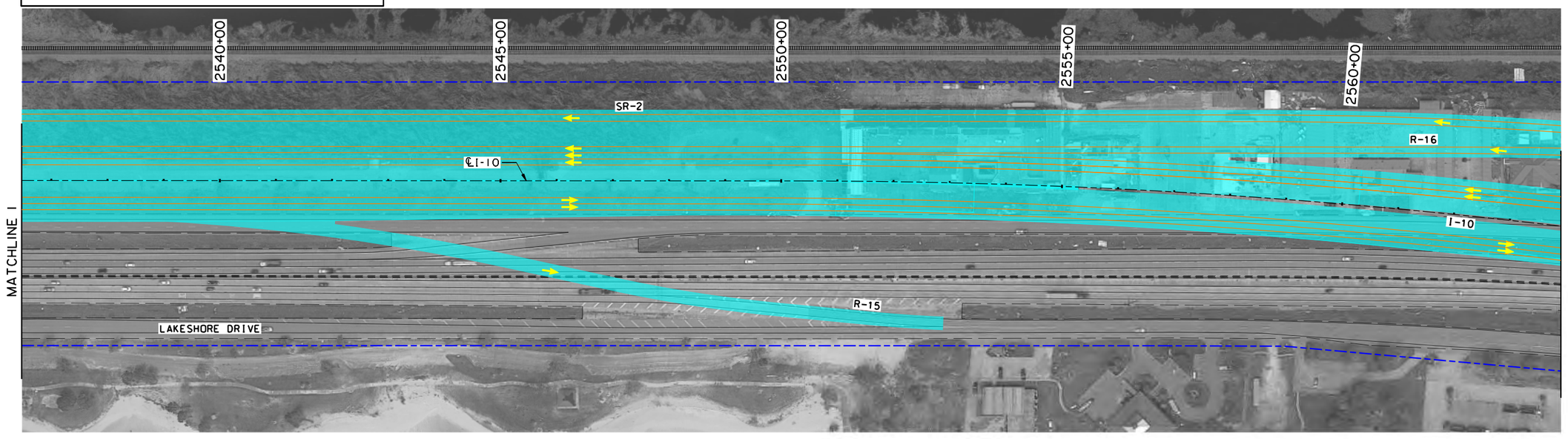

SHEET NUMBER	97
PARISH	CALCASIEU
CONTROL SECTION	450-91
STATE PROJECT	H.003931

DESIGN	G. McCALL	REVIEW	5 OF 7
CHECK	M.HELMINGER	SERIES #	
DETAIL	M.HELMINGER		
CHECK	G. McCALL		

TECHNICAL PROPOSAL PLANS

PRELIMINARY
NOT FOR CONSTRUCTION

ENGINEER:
GLENN McCALL

LICENSE #:
29639

DATE:
5/25/2023

NO.	DATE	REVISION OR CHANGE ORDER DESCRIPTION	BY

SUGGESTED SEQUENCE OF CONSTRUCTION
PHASE 9

I-10 CALCASIEU RIVER BRIDGE P3

DOTD
LOUISIANA DEPARTMENT OF TRANSPORTATION & DEVELOPMENT

CBP

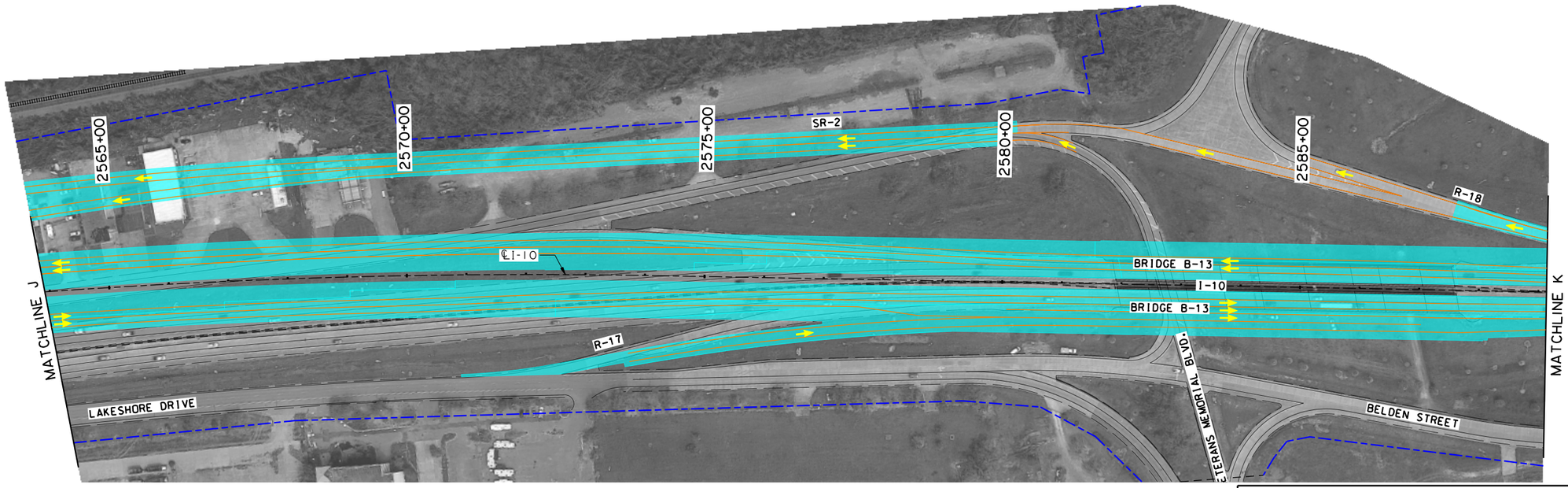

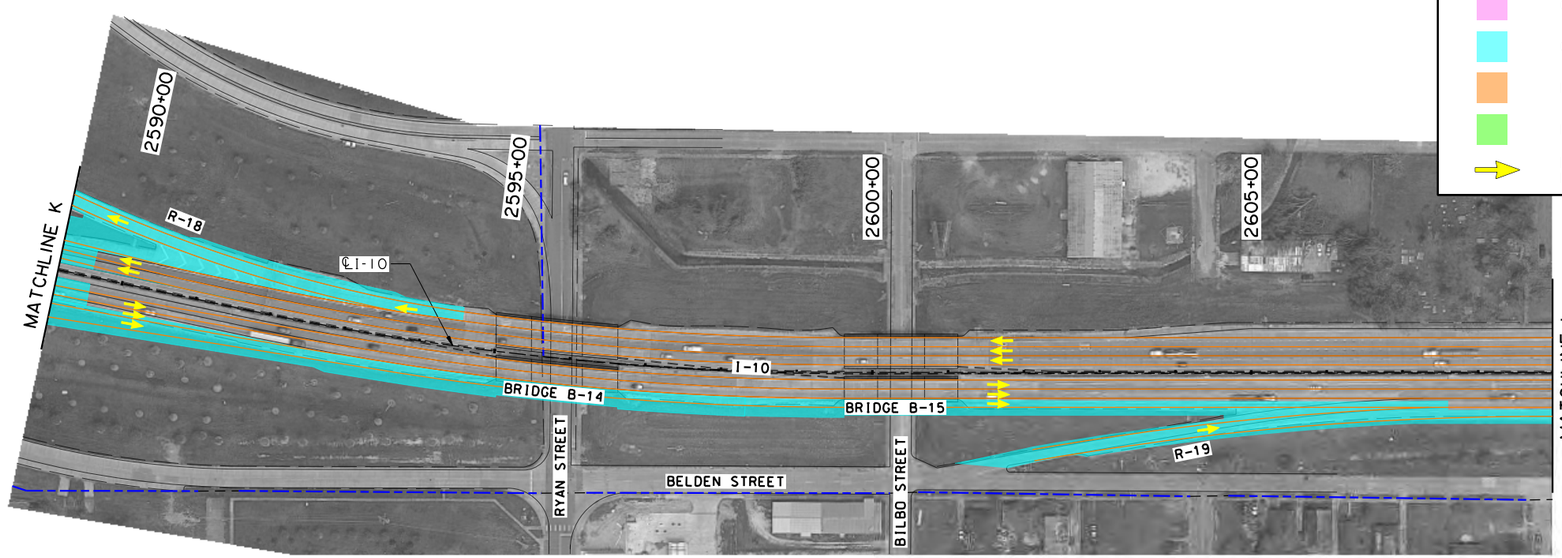

LEGEND

- EXIST. LANE LINE/SHOULDER
- SHIFTED TEMPORARY LANE LINE/SHOULDER
- EXIST. OR REQ'D R/W
- DESIGN BUILD LIMITS
- TEMPORARY CONCRETE BARRIERS
- CONSTRUCTION THIS PHASE
- CONSTRUCTED PREVIOUS PHASE
- REQ'D TEMPORARY PAVEMENT
- REQ'D MILL & OVERLAY
- DIRECTION OF TRAVEL & NUMBER OF LANES

SHEET NUMBER 98

PARISH	CONTROL SECTION	STATE PROJECT
CALCASIEU	450-91	H.003931

DESIGN	G. McCALL	DETAIL	M.HELLMINGER	SERIES # 6 OF 7
CHECK	M.HELLMINGER	CHECK	G. McCALL	
		REVIEW		

TECHNICAL PROPOSAL PLANS

PRELIMINARY
NOT FOR CONSTRUCTION

ENGINEER:
GLENN McCALL

LICENSE #:
29639

DATE:
5/25/2023

NO.	DATE	REVISION OR CHANGE ORDER DESCRIPTION	BY

SUGGESTED SEQUENCE OF CONSTRUCTION
PHASE 9

I-10 CALCASIEU RIVER BRIDGE P3

DOTD LOUISIANA DEPARTMENT OF TRANSPORTATION & DEVELOPMENT

CBP CALCASIEU BRIDGE PARTNERS

TECHNICAL PROPOSAL PLANS

5/25/2023 2:28:56 PM

S:\xdrive\HUVAL Projects\7262 (I-10 Calcasieu P3)\05 Drawings\Roadway\Border to Print\XX_MOT_Phase 9.dgn

S:\xdrive\HUVAL Projects\7262 (I-10 Calcasieu P3)\05 Drawings\Roadway\Border to Print\XX_MOT_Phase 9.dgn 5/25/2023 2:28:58 PM

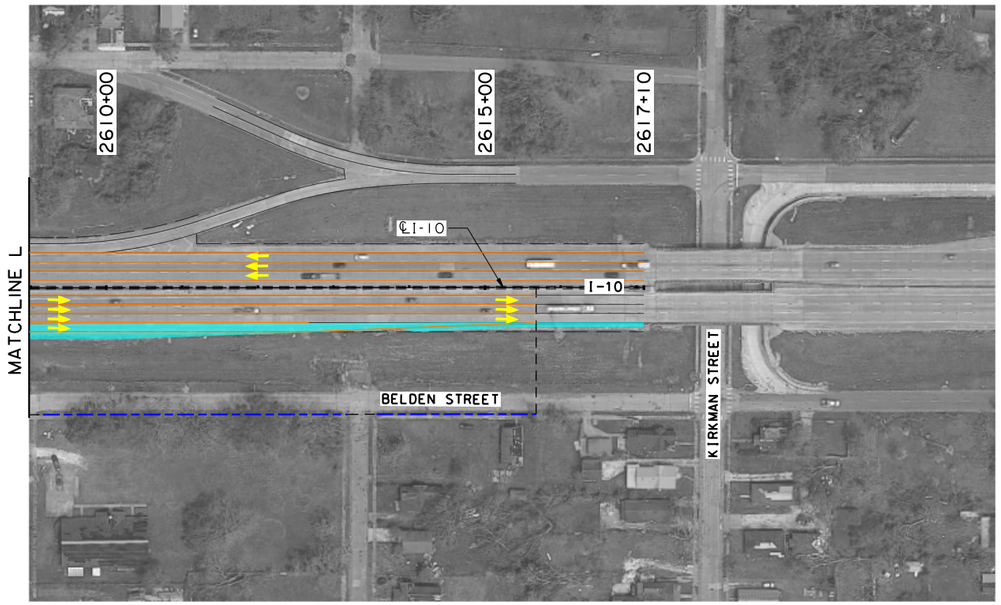

N

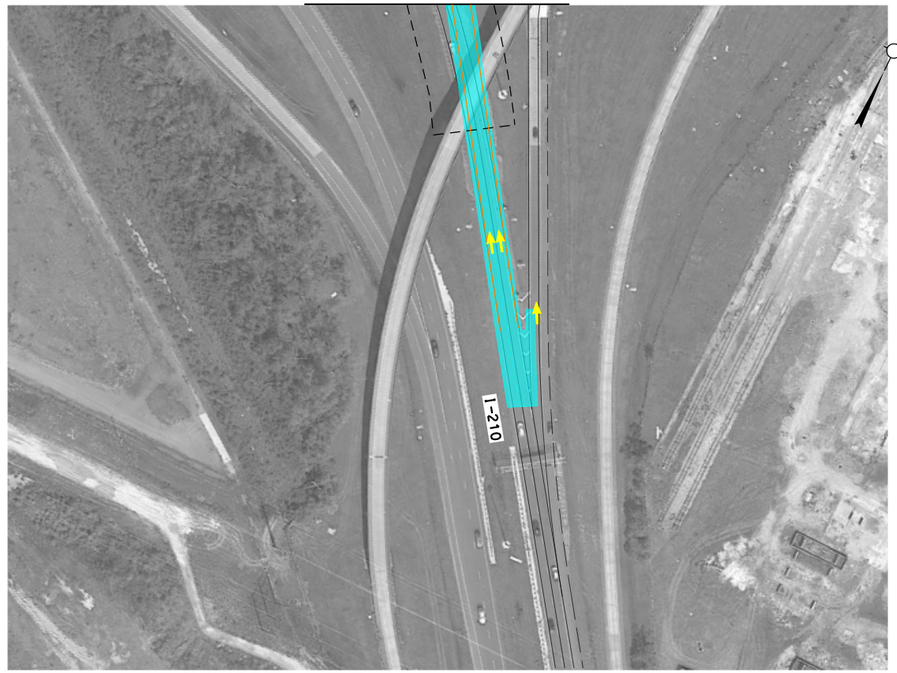

N

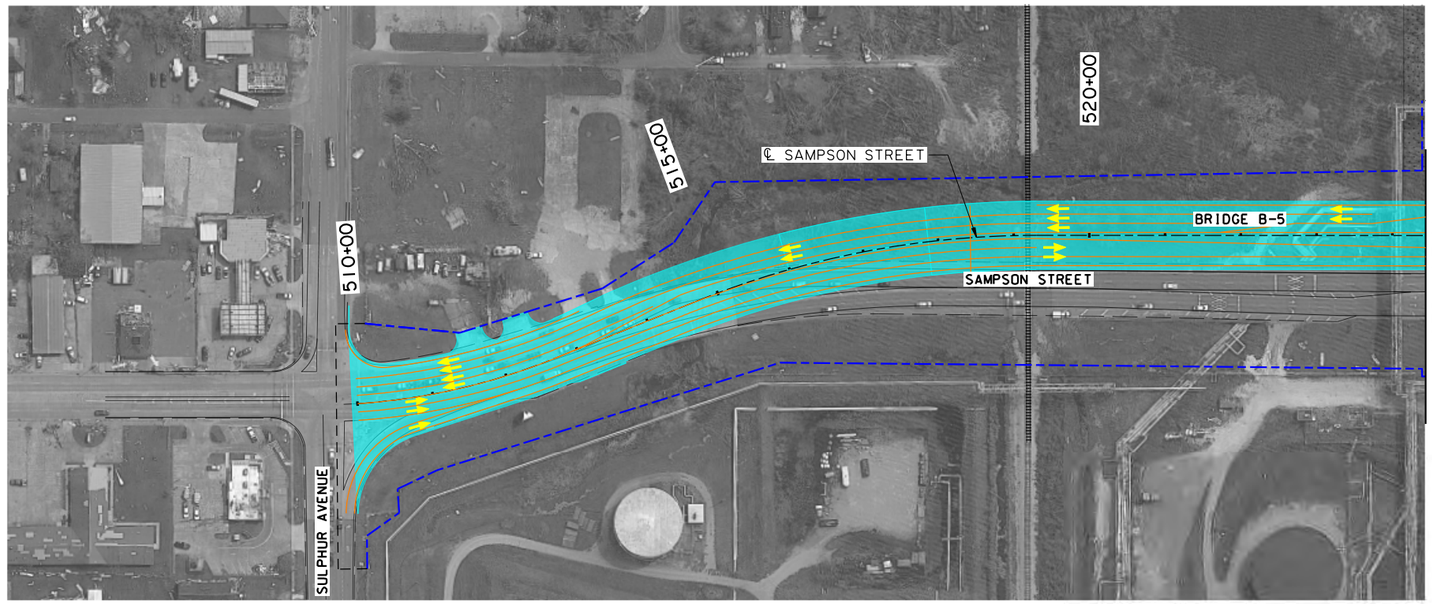

LEGEND

- EXIST. LANE LINE/SHOULDER
- SHIFTED TEMPORARY LANE LINE/SHOULDER
- EXIST. OR REQ'D R/W
- DESIGN BUILD LIMITS
- TEMPORARY CONCRETE BARRIERS
- CONSTRUCTION THIS PHASE
- CONSTRUCTED PREVIOUS PHASE
- REQ'D TEMPORARY PAVEMENT
- REQ'D MILL & OVERLAY
- DIRECTION OF TRAVEL & NUMBER OF LANES

SHEET NUMBER	99

PARISH	CONTROL SECTION	STATE PROJECT
CALCASIEU	450-91	H.003931

DESIGN	G. McCALL	DETAIL	M.HELLMINGER	REVIEW	SERIES # 7 OF 7
CHECK	M.HELLMINGER	CHECK	G. McCALL		

TECHNICAL PROPOSAL PLANS

PRELIMINARY
NOT FOR CONSTRUCTION

ENGINEER:
GLENN McCALL

LICENSE #:
29639

DATE:
5/25/2023

NO.	DATE	REVISION OR CHANGE ORDER DESCRIPTION	BY

STATE OF LOUISIANA
DEPARTMENT OF TRANSPORTATION AND DEVELOPMENT

SUGGESTED SEQUENCE OF CONSTRUCTION

PHASE 9

I-10 CALCASIEU RIVER BRIDGE P3

DOTD
LOUISIANA DEPARTMENT OF TRANSPORTATION & DEVELOPMENT

CBP
CALCASIEU BRIDGE PARTNERS

TECHNICAL PROPOSAL PLANS
S:\xdrive\HUVAL Projects\7262 (I-10 Calcasieu P3)\05 Drawings\Roadway\Border to Print\XX_Detour Route_Stage 1a (1).dgn
5/12/2023 4:15:41 PM

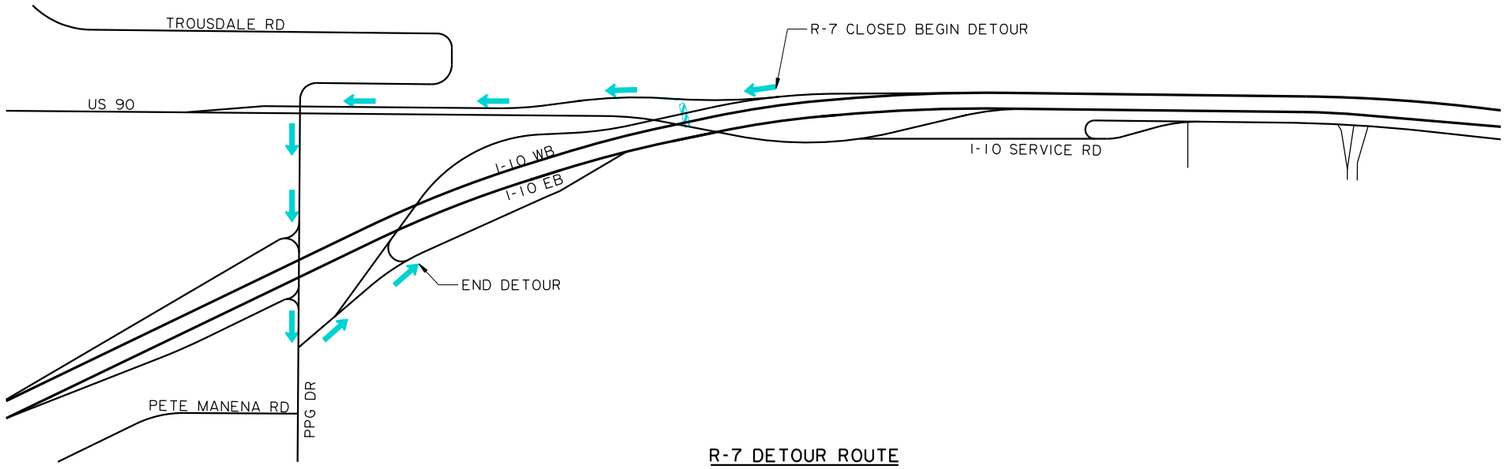

R-7 DETOUR ROUTE

N
SCALE: 1" = 400'

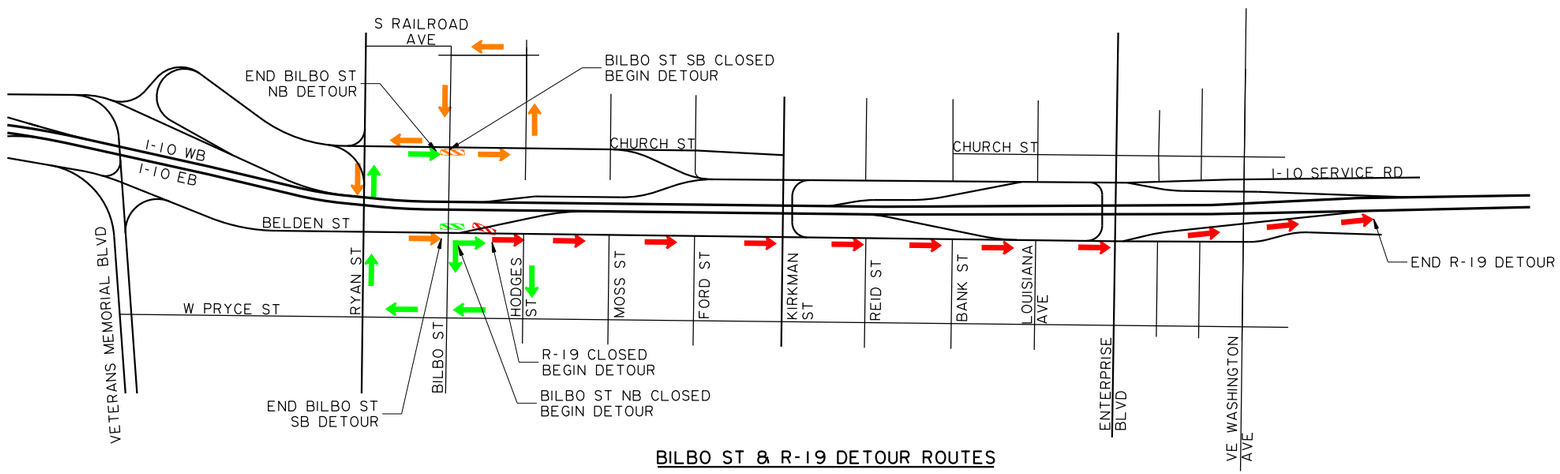

BILBO ST & R-19 DETOUR ROUTES

N
SCALE: 1" = 400'

LEGEND:
- R-7 DETOUR
- BILBO ST SB DETOUR
- BILBO ST NB DETOUR
- R-19 DETOUR
- ROAD CLOSED

SHEET NUMBER	100
PARISH	CALCASIEU
CONTROL SECTION	450-91
STATE PROJECT	H.003931
DESIGN / CHECK	D. FUSELIER / G. McCALL
DETAIL / CHECK	D. FUSELIER / G. McCALL
REVIEW / SERIES	/ OF 9

TECHNICAL PROPOSAL PLANS
PRELIMINARY
NOT FOR CONSTRUCTION
ENGINEER: GLENN McCALL
LICENSE #: 29639
DATE: 5/12/2023

NO.	DATE	REVISION OR CHANGE ORDER DESCRIPTION	BY

STAGE 1a
DETOUR ROUTES

I-10 CALCASIEU RIVER BRIDGE P3

DOTD LOUISIANA DEPARTMENT OF TRANSPORTATION & DEVELOPMENT

CBP CALCASIEU BRIDGE PARTNERS

TECHNICAL PROPOSAL PLANS
S:\xdrive\HUVAL Projects\7262 (I-10 Calcasieu P3)\05 Drawings\Roadway\Border to Print\XX_Detour Route_Stage 1b (2).dgn
5/12/2023 4:15:41 PM

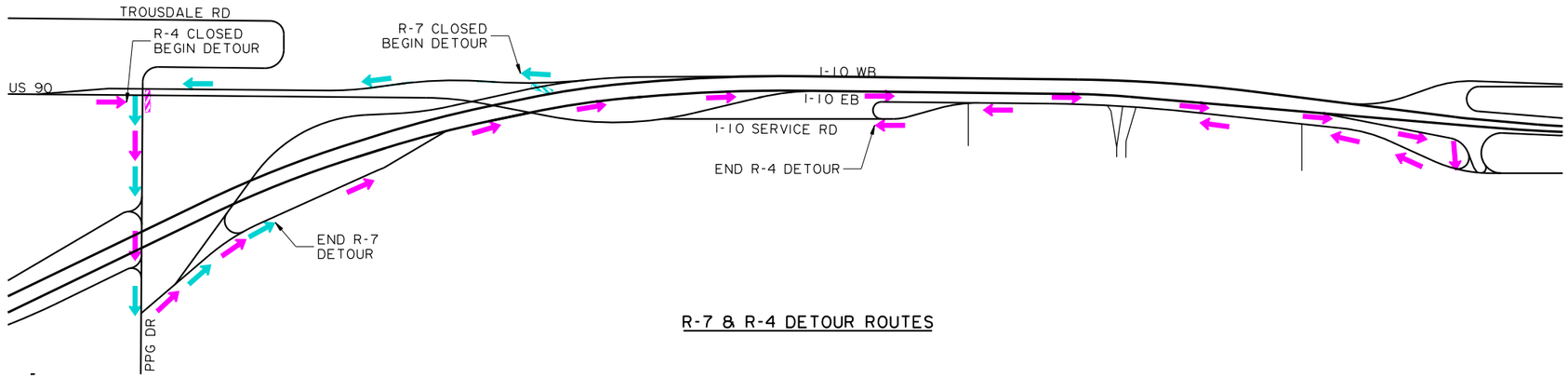

R-7 & R-4 DETOUR ROUTES

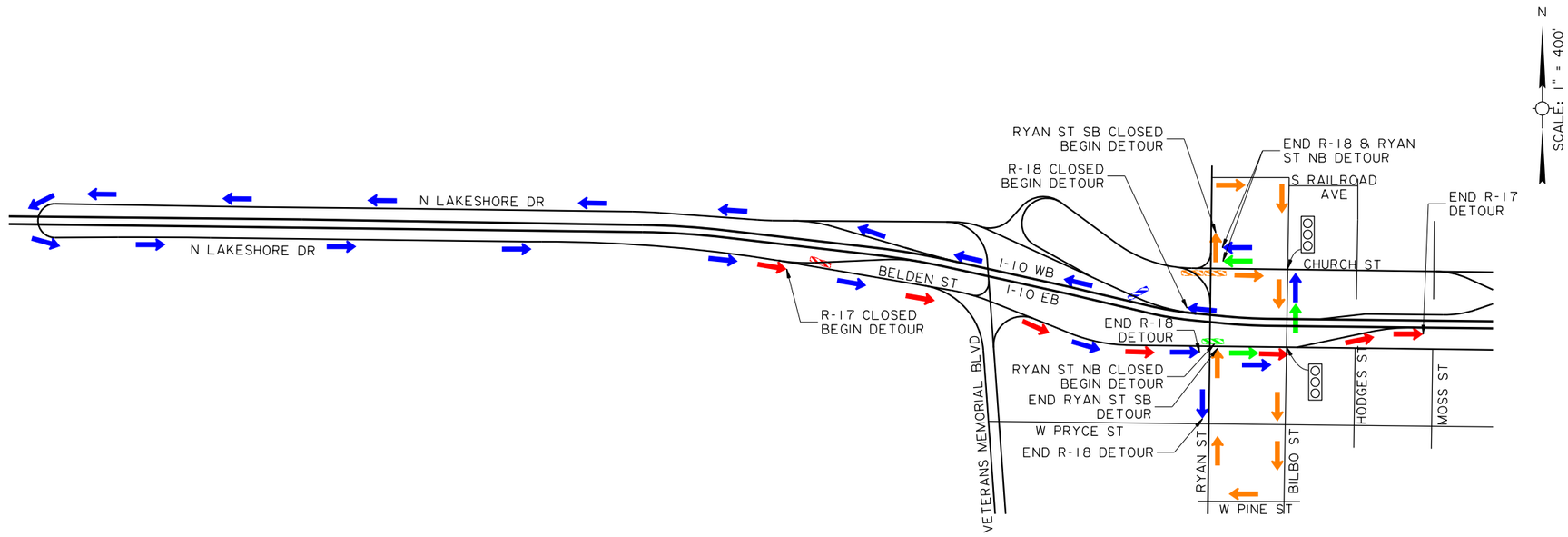

R-18, R-17, & RYAN ST DETOUR ROUTES

LEGEND:
- R-7 DETOUR
- R-4 DETOUR
- R-18 DETOUR
- R-17 DETOUR
- RYAN ST SB DETOUR
- RYAN ST NB DETOUR
- ROAD CLOSED
- TEMPORARY TRAFFIC SIGNAL

SHEET NUMBER	101
PARISH	CALCASIEU
CONTROL SECTION	450-91
STATE PROJECT	H.003931
DESIGN	D. FUSELIER
CHECK	G. McCALL
DETAIL	D. FUSELIER
CHECK	G. McCALL
REVIEW	
SERIES =	2 OF 9

TECHNICAL PROPOSAL PLANS
PRELIMINARY
NOT FOR CONSTRUCTION
ENGINEER: GLENN McCALL
LICENSE #: 29639
DATE: 5/12/2023

NO.	DATE	REVISION OR CHANGE ORDER DESCRIPTION	BY

STAGE 1b
DETOUR ROUTES

I-10 CALCASIEU RIVER BRIDGE P3

DOTD LOUISIANA DEPARTMENT OF TRANSPORTATION & DEVELOPMENT

CBP CALCASIEU BRIDGE PARTNERS

S:\xdrive\HUVAL Projects\7262 (I-10 Calcasieu P3)\05 Drawings\Roadway\Border to Print\XX_Detour Route_Stage 1c (3).dgn 5/12/2023 4:15:42 PM

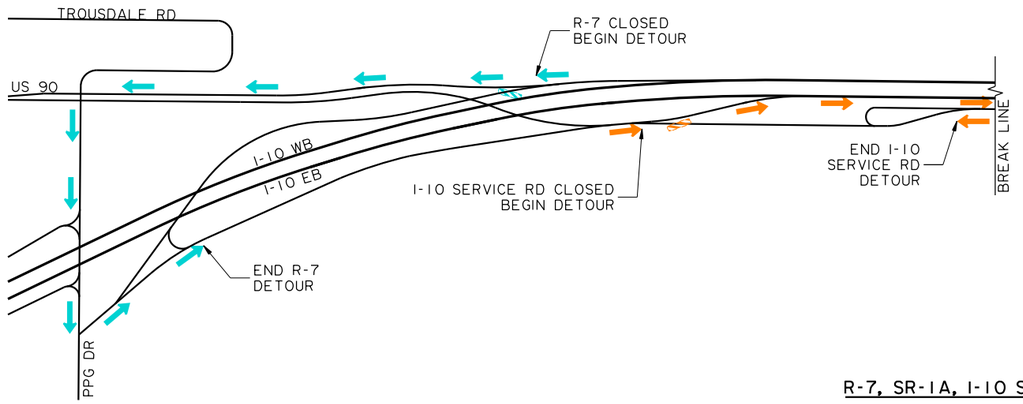

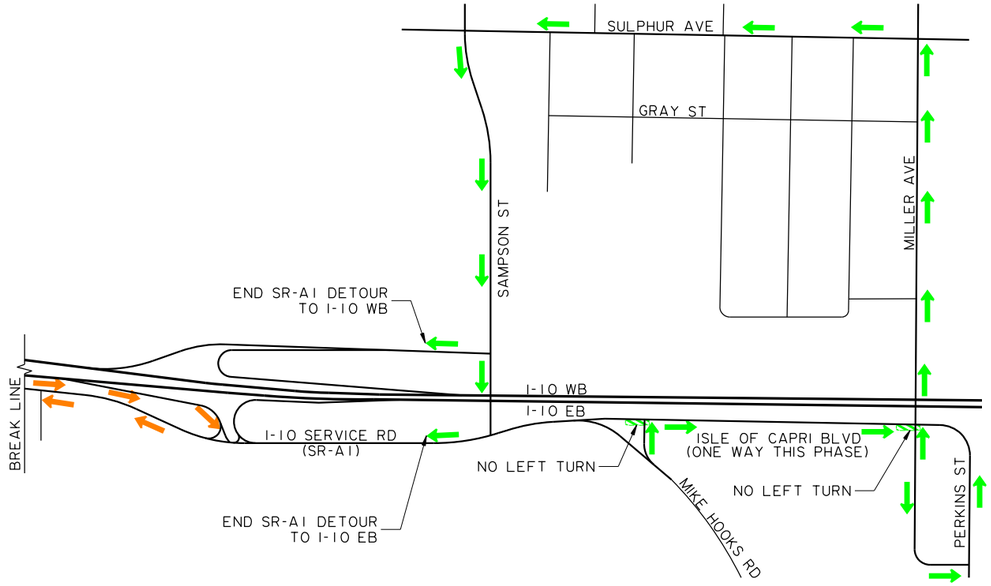

R-7, SR-1A, I-10 SERVICE RD DETOUR ROUTES

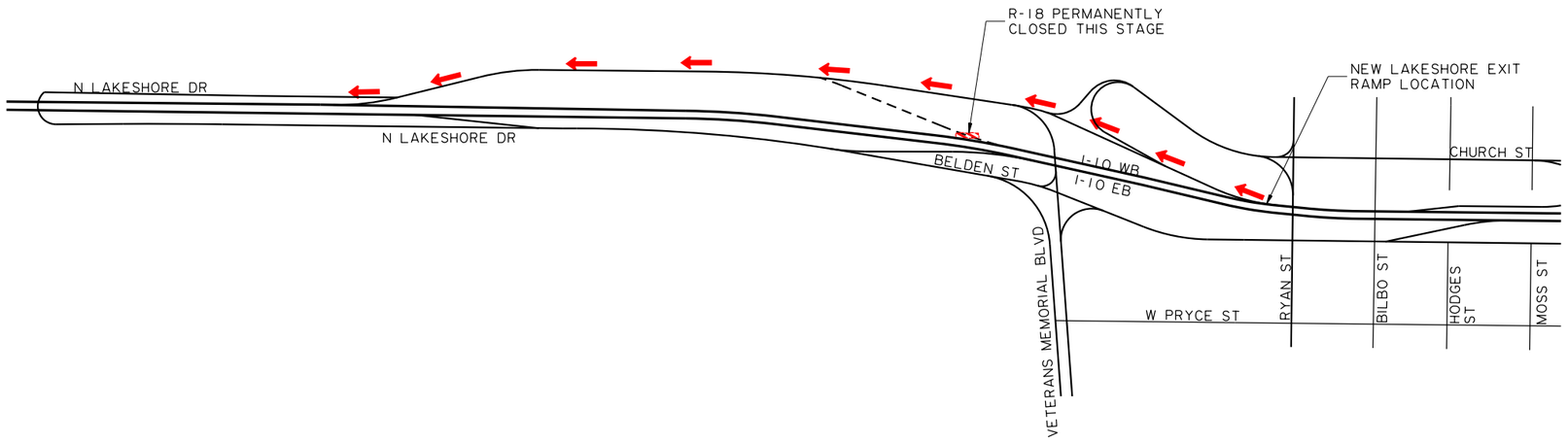

LAKESHORE EXIT RAMP PERMANENT TRAFFIC CONFIGURATION

LEGEND:
- R-7 DETOUR
- SR-1A DETOUR
- PERMANENT TRAFFIC CONFIGURATION
- I-10 SERVICE ROAD DETOUR
- ROAD CLOSED

SHEET NUMBER	102
PARISH	CALCASIEU
CONTROL SECTION	450-91
STATE PROJECT	H.003931
DESIGN	D. FUSELIER
CHECK	G. McCALL
DETAIL	D. FUSELIER
CHECK	G. McCALL
REVIEW	
SERIES	3 OF 9

TECHNICAL PROPOSAL PLANS

PRELIMINARY
NOT FOR CONSTRUCTION

ENGINEER:
GLENN McCALL

LICENSE #:
29639

DATE:
5/12/2023

NO.	DATE	REVISION OR CHANGE ORDER DESCRIPTION	BY

STAGE 1c
DETOUR ROUTES

I-10 CALCASIEU RIVER BRIDGE P3

LOUISIANA DEPARTMENT OF TRANSPORTATION & DEVELOPMENT

CALCASIEU BRIDGE PARTNERS

TECHNICAL PROPOSAL PLANS
S:\xdrive\HUVAL Projects\7262 (I-10 Calcasieu P3)\05 Drawings\Roadway\Border to Print\XX_Detour Route_Stage 1d (4).dgn
5/12/2023 4:15:42 PM

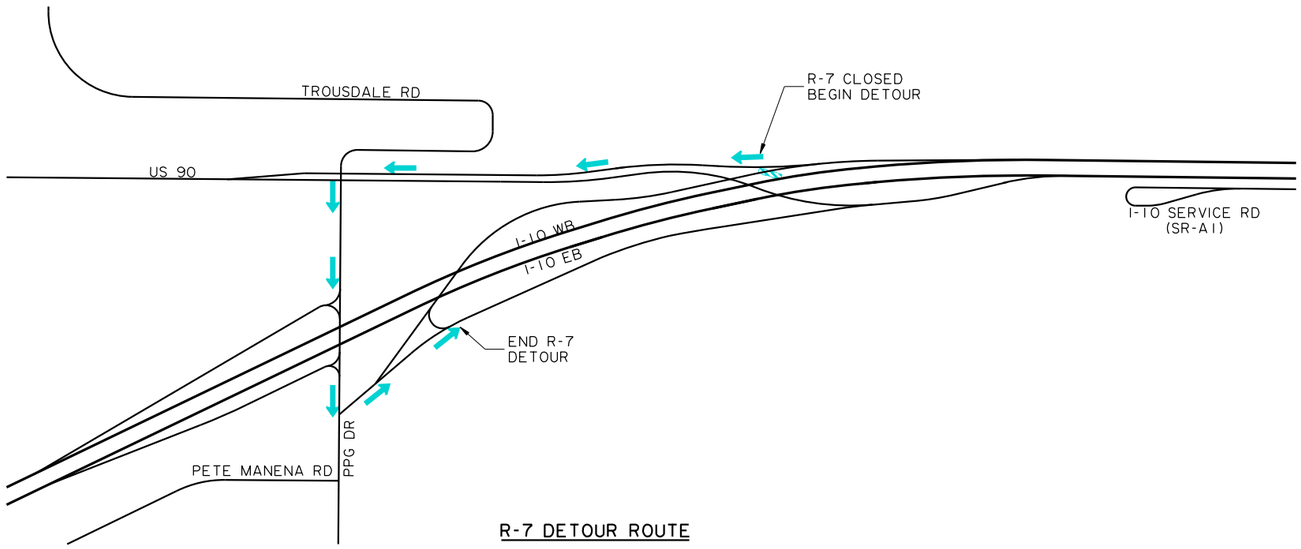

R-7 DETOUR ROUTE

LEGEND:
- R-7 DETOUR
- ROAD CLOSED

SHEET NUMBER	103
PARISH	CALCASIEU
CONTROL SECTION	450-91
STATE PROJECT	H.003931
DESIGN	D. FUSELIER
CHECK	G. McCALL
DETAIL	D. FUSELIER
CHECK	G. McCALL
REVIEW	
SERIES	4 OF 9

TECHNICAL PROPOSAL PLANS
PRELIMINARY
NOT FOR CONSTRUCTION
ENGINEER:
GLENN McCALL
LICENSE #:
29639
DATE:
5/12/2023

NO.	DATE	REVISION OR CHANGE ORDER DESCRIPTION	BY

STATE OF LOUISIANA
DEPARTMENT OF TRANSPORTATION AND DEVELOPMENT

STAGE 1d
DETOUR ROUTES

I-10 CALCASIEU RIVER BRIDGE P3

DOTD
LOUISIANA DEPARTMENT OF TRANSPORTATION & DEVELOPMENT

CBP
CALCASIEU BRIDGE PARTNERS

TECHNICAL PROPOSAL PLANS
S:\xdrive\HUVAL Projects\7262 (I-10 Calcasieu P3)\05 Drawings\Roadway\Border to Print\XX_Detour Route_Stage 1e (5).dgn
5/12/2023 4:15:42 PM

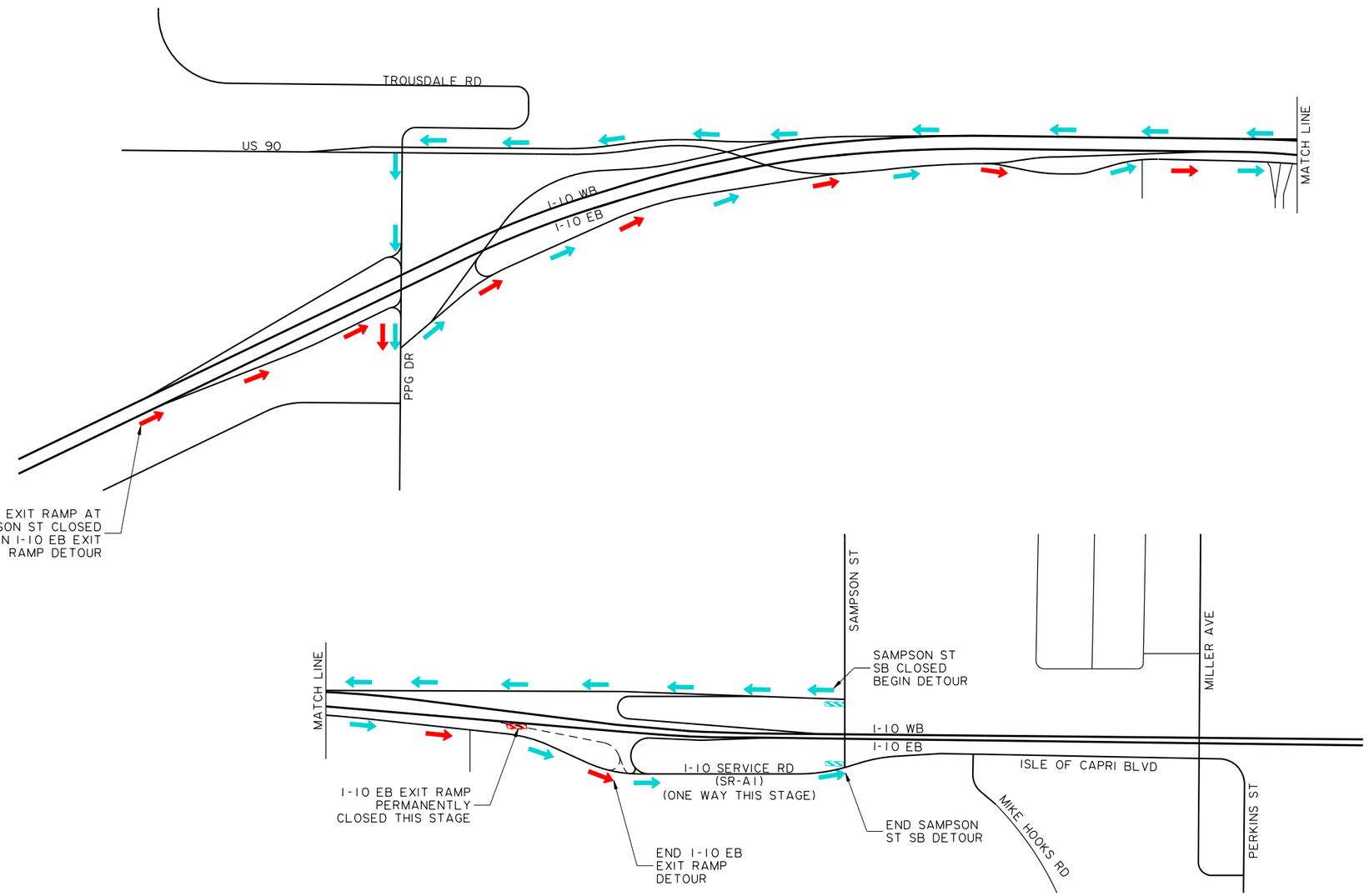

SAMPSON ST DETOUR ROUTES

N

SCALE: 1" = 400'

LEGEND:

- SAMPSON ST SB DETOUR
- I-10 EB EXIT RAMP DETOUR
- ROAD CLOSED

SHEET NUMBER	104
PARISH	CALCASIEU
CONTROL SECTION	450-91
STATE PROJECT	H.003393 I
DESIGN	D. FUSELIER
CHECK	G. McCALL
DETAIL	D. FUSELIER
CHECK	G. McCALL
REVIEW	
SERIES #	5 OF 9

TECHNICAL PROPOSAL PLANS
PRELIMINARY
NOT FOR CONSTRUCTION
ENGINEER: GLENN McCALL
LICENSE #: 29639
DATE: 5/12/2023

NO.	DATE	REVISION OR CHANGE ORDER DESCRIPTION	BY

STAGE 1e
DETOUR ROUTES

I-10 CALCASIEU RIVER BRIDGE P3

DOTD LOUISIANA DEPARTMENT OF TRANSPORTATION & DEVELOPMENT

CBP CALCASIEU BRIDGE PARTNERS

TECHNICAL PROPOSAL PLANS
S:\xdrive\HUVAL Projects\7262 (I-10 Calcasieu P3)\05 Drawings\Roadway\Border to Print\XX_Detour Route_Stage 1f (6).dgn
5/12/2023 4:15:43 PM

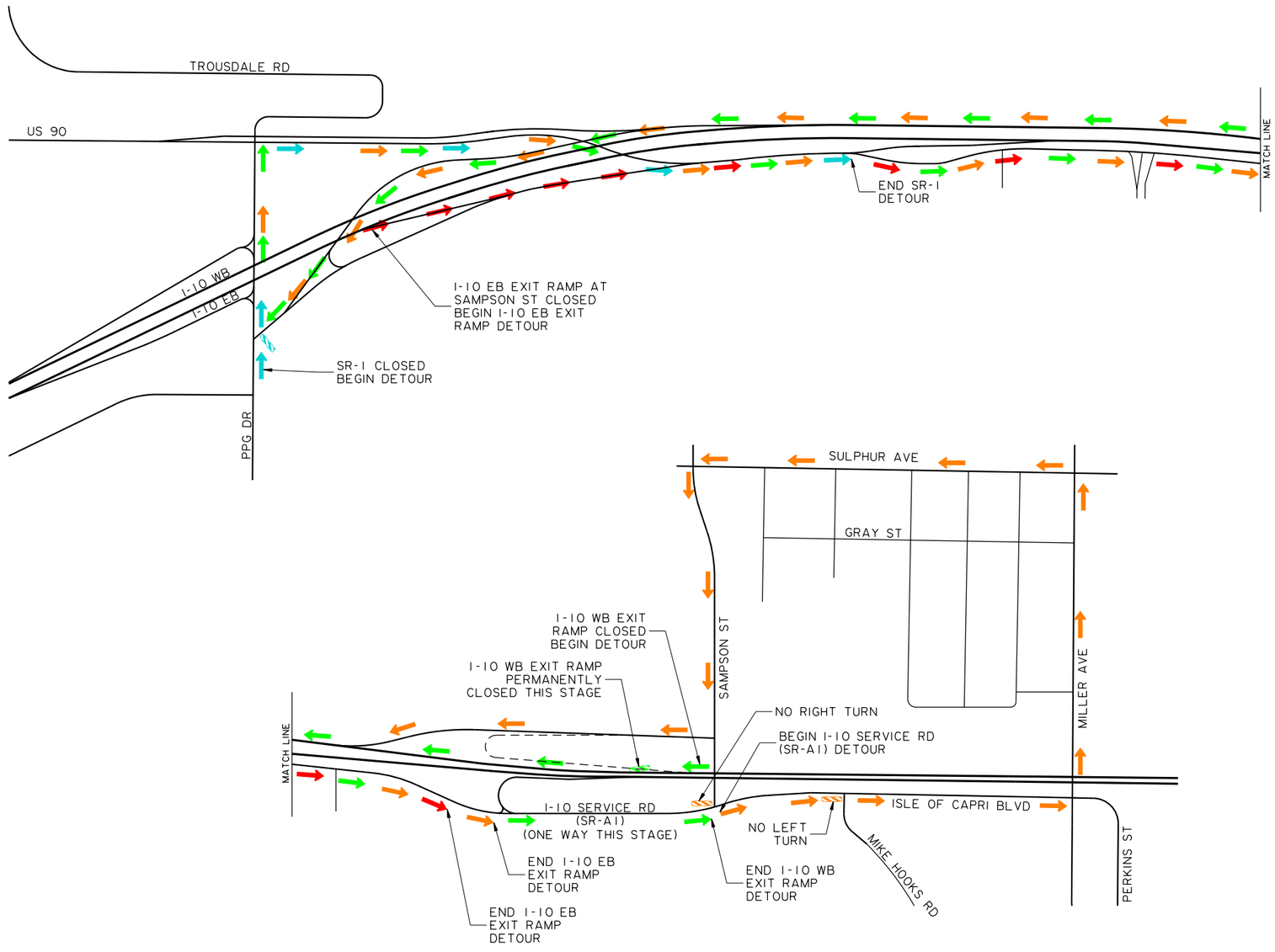

N
SCALE: 1" = 400'

LEGEND:
- SR-1 DETOUR
- I-10 EB EXIT RAMP DETOUR
- I-10 WB EXIT RAMP DETOUR
- I-10 SERVICE RD (SR-A1) WB DETOUR
- ROAD CLOSED

SR-1 DETOUR ROUTES

SHEET NUMBER	105
PARISH	CALCASIEU
CONTROL SECTION	450-91
STATE PROJECT	H.003931
DESIGN	D. FUSELIER
CHECK	G. McCALL
DETAIL	D. FUSELIER
CHECK	G. McCALL
REVIEW	
SERIES = 6 OF 9	

TECHNICAL PROPOSAL PLANS
PRELIMINARY
NOT FOR CONSTRUCTION
ENGINEER: GLENN McCALL
LICENSE #: 29639
DATE: 5/12/2023

NO.	DATE	REVISION OR CHANGE ORDER DESCRIPTION	BY

STAGE 1f
DETOUR ROUTES

I-10 CALCASIEU RIVER BRIDGE P3

DOTD LOUISIANA DEPARTMENT OF TRANSPORTATION & DEVELOPMENT
CBP CALCASIEU BRIDGE PARTNERS

TECHNICAL PROPOSAL PLANS

5/12/2023 4:15:43 PM

S:\xdrive\HUVAL Projects\7262 (I-10 Calcasieu P3)\05 Drawings\Roadway\Border to Print\XX_Detour Route_Stage 1g (7).dgn

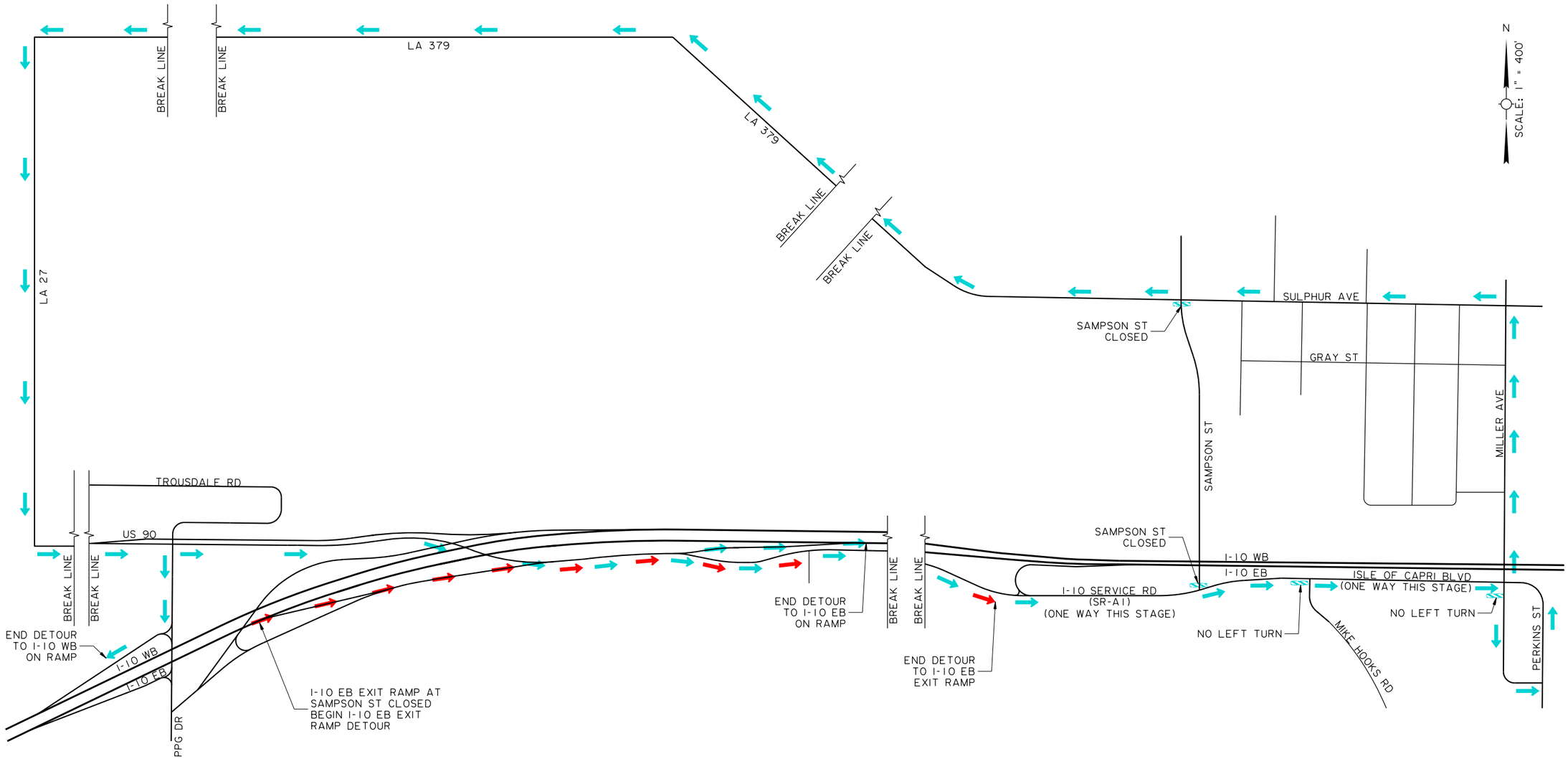

LEGEND:

- SAMPSON ST DETOUR
- I-10 EB EXIT RAMP DETOUR
- ROAD CLOSED

SAMPSON STREET CLOSURE DETOUR LOOP

SHEET NUMBER	106
PARISH	CALCASIEU
CONTROL SECTION	450-91
STATE PROJECT	H.003931
DESIGN	D. FUSELIER
CHECK	G. McCALL
DETAIL	D. FUSELIER
CHECK	G. McCALL
REVIEW	
SERIES = 7 OF 9	

TECHNICAL PROPOSAL PLANS

PRELIMINARY
NOT FOR CONSTRUCTION

ENGINEER:
GLENN McCALL

LICENSE #:
29639

DATE:
5/12/2023

NO.	DATE	REVISION OR CHANGE ORDER DESCRIPTION	BY

STAGE 1g
DETOUR ROUTES

I-10 CALCASIEU RIVER BRIDGE P3

DOTD
LOUISIANA DEPARTMENT OF TRANSPORTATION & DEVELOPMENT

CBP
CALCASIEU BRIDGE PARTNERS

S:\xdrive\HUVAL Projects\7262 (I-10 Calcasieu P3)\05 Drawings\Roadway\Border to Print\XX_Detour Route_Stage 1h (8).dgn 5/12/2023 4:15:43 PM

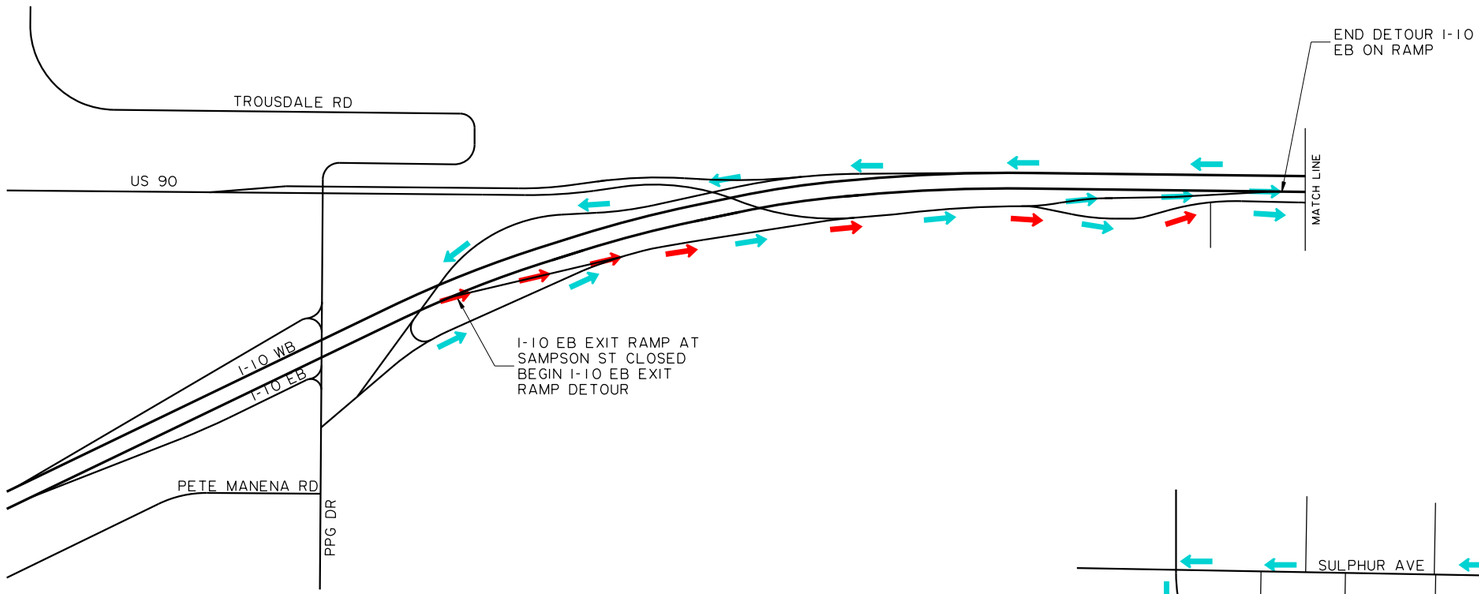

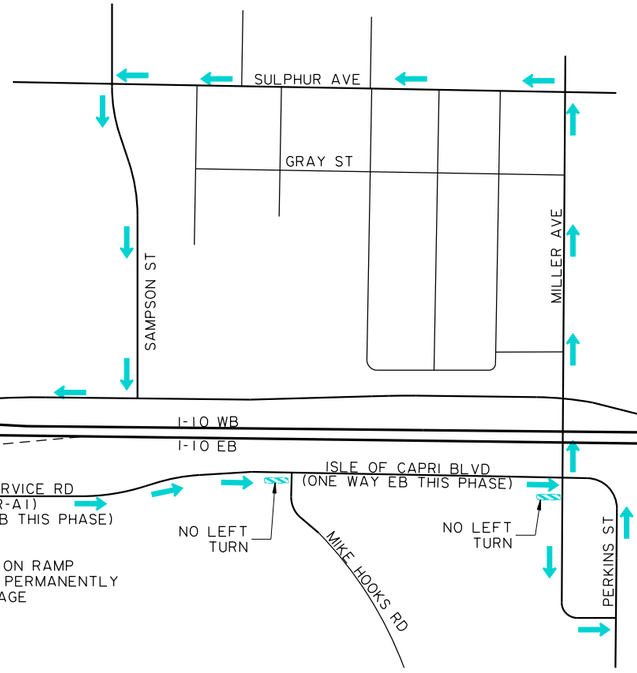

N

SCALE: 1" = 400'

LEGEND:

- SR-1A DETOUR
- I-10 EB EXIT RAMP DETOUR
- ROAD CLOSED

SR-1A DETOUR ROUTES

SHEET NUMBER	107
PARISH	CALCASIEU
CONTROL SECTION	450-91
STATE PROJECT	H.003393 I
DESIGN	D. FUSELIER
CHECK	G. McCALL
DETAIL	D. FUSELIER
CHECK	G. McCALL
REVIEW	
SERIES =	8 OF 9

TECHNICAL PROPOSAL PLANS

PRELIMINARY
NOT FOR CONSTRUCTION

ENGINEER:
GLENN McCALL

LICENSE #:
29639

DATE:
5/12/2023

NO.	DATE	REVISION OR CHANGE ORDER DESCRIPTION	BY

STAGE 1h
DETOUR ROUTES

I-10 CALCASIEU RIVER BRIDGE P3

DOTD LOUISIANA DEPARTMENT OF TRANSPORTATION & DEVELOPMENT

CBP CALCASIEU BRIDGE PARTNERS

TECHNICAL PROPOSAL PLANS
S:\xdrive\HUVAL Projects\7262 (I-10 Calcasieu P3)\05 Drawings\Roadway\Border to Print\XX_Detour Route_Stage 1i (9).dgn
5/12/2023 4:15:44 PM

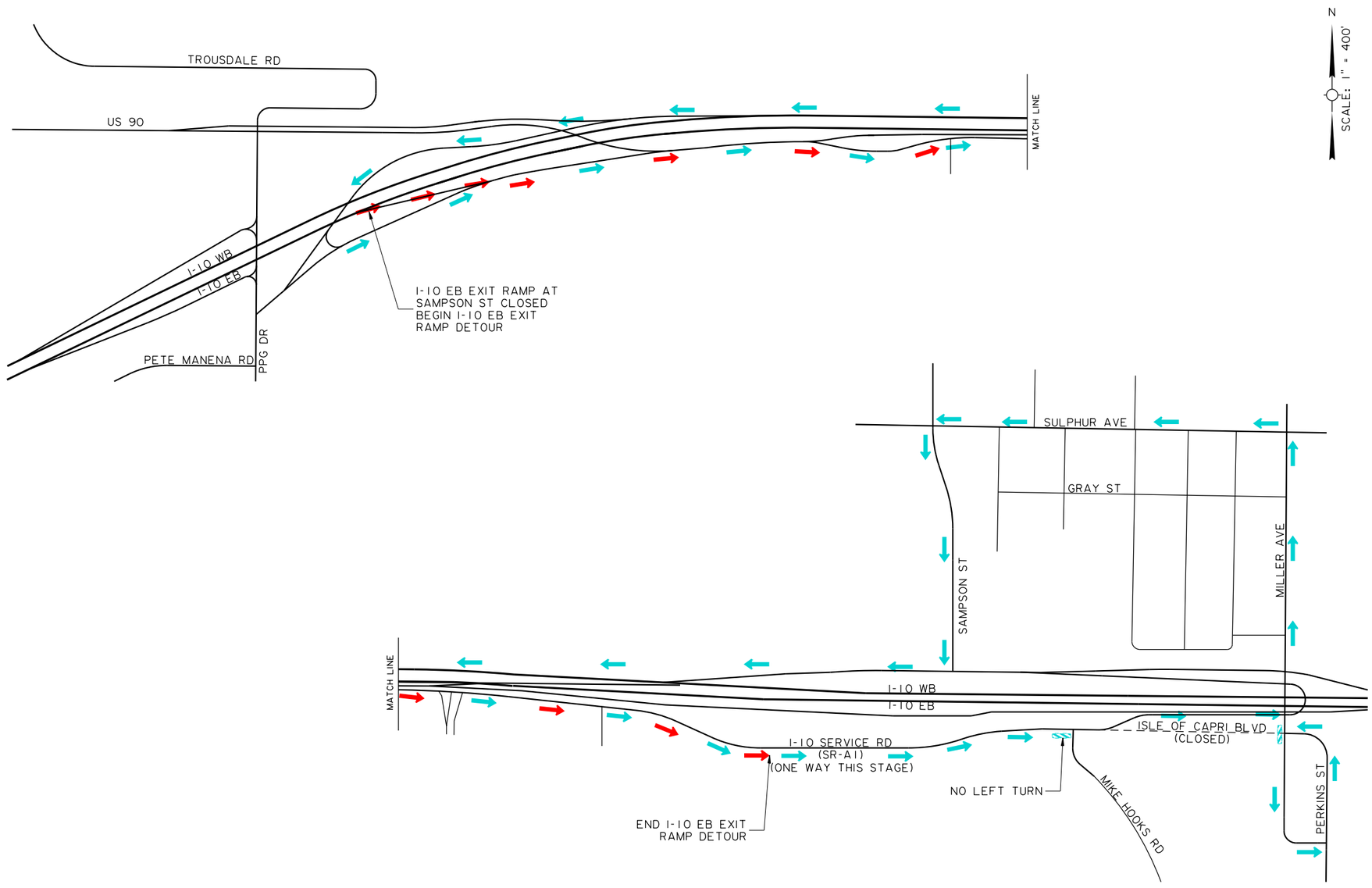

SR-1A DETOUR ROUTE

LEGEND:
- SR-1A DETOUR
- I-10 EB EXIT RAMP DETOUR
- ROAD CLOSED

SHEET NUMBER	108
PARISH	CALCASIEU
CONTROL SECTION	450-91
STATE PROJECT	H.003931
DESIGN D. FUSELIER / CHECK G. McCALL	DETAIL D. FUSELIER / CHECK G. McCALL / REVIEW / SERIES = 9 OF 9

TECHNICAL PROPOSAL PLANS
PRELIMINARY
NOT FOR CONSTRUCTION
ENGINEER: GLENN McCALL
LICENSE #: 29639
DATE: 5/12/2023

NO.	DATE	REVISION OR CHANGE ORDER DESCRIPTION	BY

STATE OF LOUISIANA DEPARTMENT OF TRANSPORTATION AND DEVELOPMENT

STAGE 1i DETOUR ROUTES

I-10 CALCASIEU RIVER BRIDGE P3

DOTD LOUISIANA DEPARTMENT OF TRANSPORTATION & DEVELOPMENT

CBP CALCASIEU BRIDGE PARTNERS

TECHNICAL PROPOSAL

04/19/2023

STIMES

INDEX TO SHEETS

SHEET NO.	DESCRIPTION
1	TITLE SHEET AND LAYOUT MAP
2-6	TRAFFIC SIGNAL PLANS
7-70	PERMANENT SIGNING PLANS
71-99	PAVEMENT MARKING PLANS
100-127	ITS PLANS
128-176	LIGHTING PLANS

TOTAL SHEETS IN VOLUME 4 = 176

STATE OF LOUISIANA
DEPARTMENT OF TRANSPORTATION AND DEVELOPMENT

PLANS OF PROPOSED STATE HIGHWAY

FEDERAL PROJECT NUMBER H003931

STATE PROJECT NUMBER H.003931

I-10 CALCASIEU RIVER BRIDGE PUBLIC-PRIVATE PARTNERSHIP PROJECT

CALCASIEU PARISH

INTERSTATE 10

VOLUME 4 - SIGNING, PAVEMENT MARKINGS, ITS, SIGNALS, LIGHTING

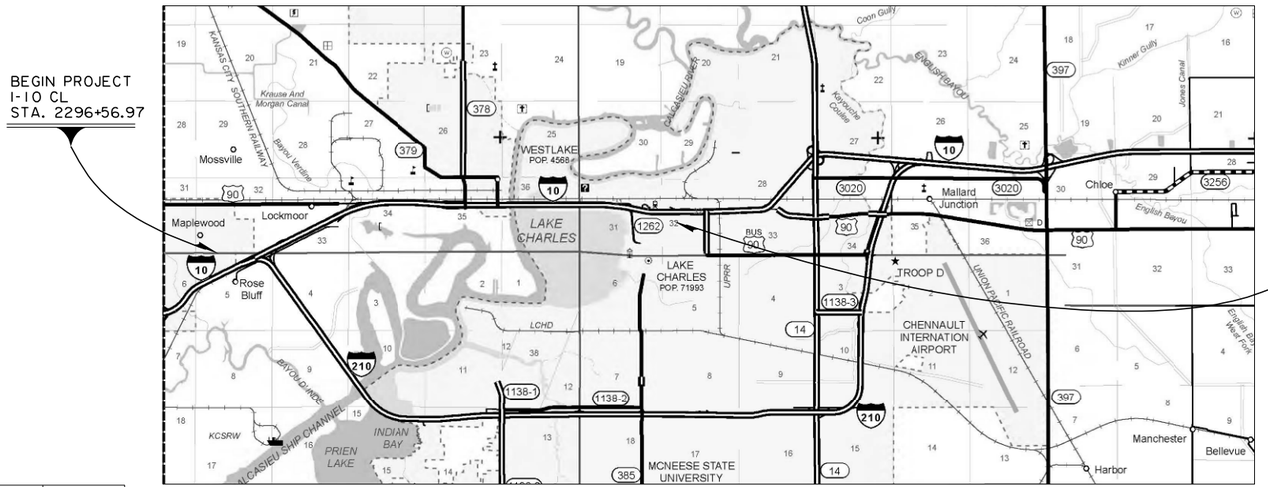

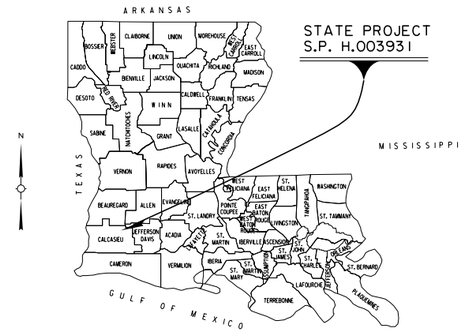

VICINITY MAP

DATE	REVISION	DATE	RECOMMENDED	DATE	APPROVED

SCHEDULE OF REVISIONS

LAYOUT MAP

SCALE: 1/2 INCH = 1 MILE

1 0 1 2 3

SURVEY

HORIZONTAL CONTROL:
LOUISIANA STATE PLANE COORDINATES
ZONE 1702

BASE STATIONS:
PID: DP7417, CORS ID: CALC
DESIGNATION: CALCASIEU PASS CORS ARP
LAT. = N29°46'05.28112" LON. = W093°20'34.37139"
NORTHING/Y = 466763.16 EASTING/X = 2643301.38

PID: DK3579, CORS ID: CAMR
DESIGNATION: CAMERON PARISH CT CORS ARP
LAT. = N29°47'54.57704" LON. = W093°19'30.38074"
NORTHING/Y = 477703.50 EASTING/X = 2649131.90

VERTICAL CONTROL: NAVD 88 (GEOID 18) US SFT

ALL BEARINGS AND DISTANCES ARE GRID

TYPE OF CONSTRUCTION

REMOVING ASPHALT PAVEMENT, DRAINAGE STRUCTURES, GRADING, BRIDGES, MSE WALLS, BASE COURSE, ASPHALT CONCRETE, CONCRETE CURB, TRAFFIC SIGNALIZATION, ITS, LIGHTING PERMANENT SIGNING, PERMANENT STRIPING.

STANDARD SPECIFICATIONS

THE 2016 EDITION OF THE LOUISIANA DOTD STANDARD SPECIFICATIONS FOR ROADS AND BRIDGES,AS AMMENDED BY THE PROJECT SPECIFICATIONS, SHALL GOVERN.

SCALES

PLAN: 1" = 50'
PROFILE HORIZ: 1" = 50'
PROFILE VERT: 1" = 5'

LENGTH AND LOCATION OF WORK

CONTROL SECTION	STATION BEGIN	STATION END	LOGMILE BEGIN	LOGMILE END	ALGEBRAIC SUM OF ALL EQUATIONS FEET	GROSS LENGTH FEET	EXCEPTION FEET	BRIDGE LENGTH FEET	BRIDGE LENGTH MILES	ROADWAY LENGTH FEET	ROADWAY LENGTH MILES

TOTAL LENGTH OF BRIDGES			
TOTAL LENGTH OF ROADWAY			
TOTAL MILES			

APPROVED

DOTD CHIEF ENGINEER

DATE

SHEET NUMBER	1
PARISH	CALCASIEU
CONTROL SECTION	450-91
STATE PROJECT	H.003931
DESIGN CHECK	
DETAIL CHECK	
REVIEW	
SERIES #	

TECHNICAL PROPOSAL
PRELIMINARY
NOT FOR CONSTRUCTION
ENGINEER: ARI DEITCH
LICENSE #: 41842
DATE: 04/19/2023

NO.	DATE	REVISION OR CHANGE ORDER DESCRIPTION	BY

TITLE SHEET

I-10 CALCASIEU RIVER BRIDGE P3

LOUISIANA DEPARTMENT OF TRANSPORTATION & DEVELOPMENT

CALCASIEU BRIDGE PARTNERS

$$this is the pathname including directory path and design file name$$

TECHNICAL PROPOSAL

04/19/23

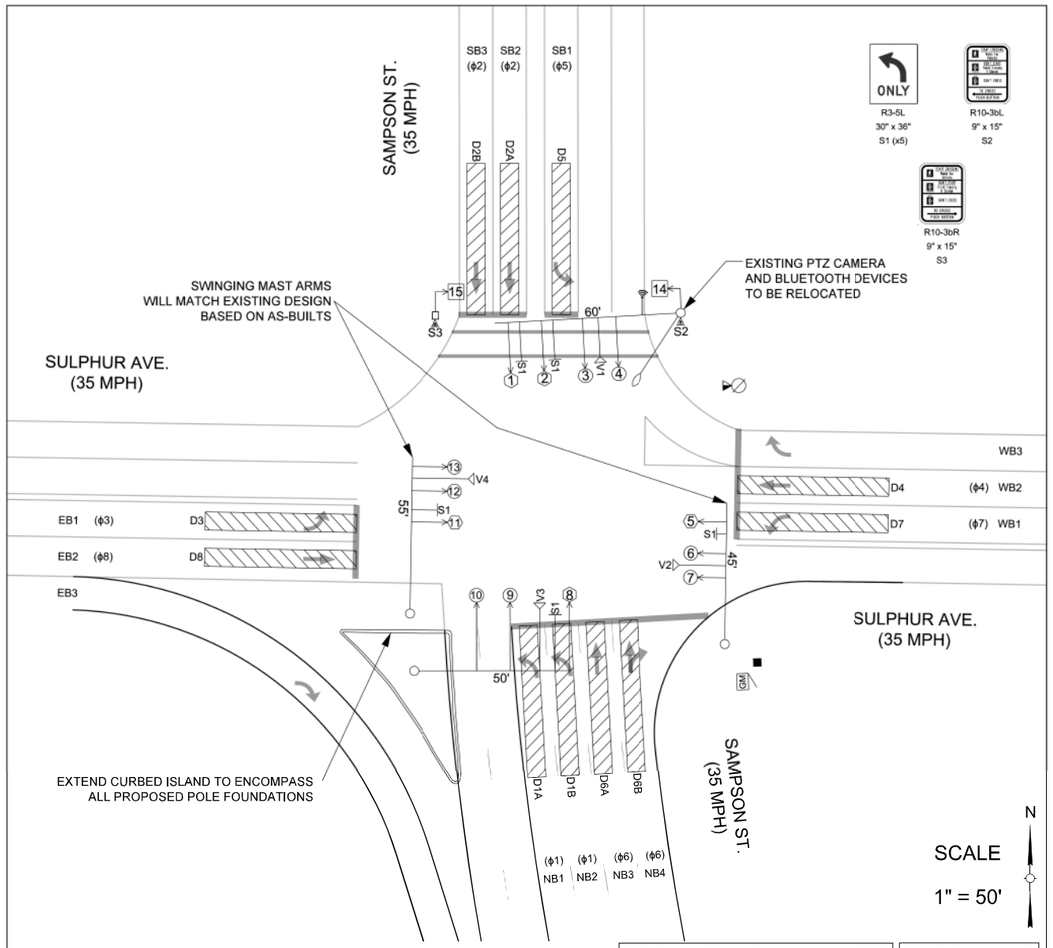

BACKPLATES: YES [X] NO [ ] | SIGNAL HEAD HEIGHT: 17 FT | SKETCH OF INTERSECTION | NOT TO SCALE

INTERSECTION: SULPHUR AVE. AT SAMPSON ST. | TSI #: 10-104 | PAGE X OF X

GM GROUND MOUNTED CABINET & CONTROLLER
PM POLE MOUNTED CABINET & CONTROLLER
SIGNAL POWER PEDESTAL W/ DISCONNECT
S1 OVERHEAD SIGN & NO.
S1 GROUND MOUNT SIGN & NO.
PARALLEL PARKING
POWER SOURCE
WOOD POLE
METAL POLE
UTILITY POLE
MAST ARM
SPAN WIRE
STOP BAR
PEDESTAL MOUNT SIGNAL & NO.
SIGNAL FACE & NO.
SIGNAL FACE WITH ARROWS & NO.
PEDESTRIAN SIGNAL & NO.
PED BUTTON & SIGN
AUDIBLE PED BUTTON & SIGN
PED CROSS WALK
D4 LOOP DETECTOR & NO.
VIDEO DETECTION ZONE & NO.
V1 VIDEO DETECTION
VDS WIRELESS VDS RECIEVER
R1 RADAR DETECTION
M1A WIRELESS VDS
WIRELESS INTERCONNECT

EXISTING SPEED LIMITS

SULPHUR AVE. - 35 MPH
SAMPSON ST. - 35 MPH

SIGNAL FACES	3,4,6,7,9, 10,12,13		1,2,8				5,11				14,15
TOTALS	8		3				3				2
DK = DARK R = RED Y = YELLOW G = GREEN FB = GREEN ARROW FA = YELLOW ARROW SY = STEADY YELLOW ARROW FY = FLASHING YELLOW ARROW 8" = 8" DIA. LENS 12" = 12" DIA. LENS OP = OPTICALLY PROGRAMED LENS	R Y G	R Y G	R Y G	R Y G	R G G	R Y G G	R Y G G	R Y Y G G	R Y G G	R SY FY G	PED

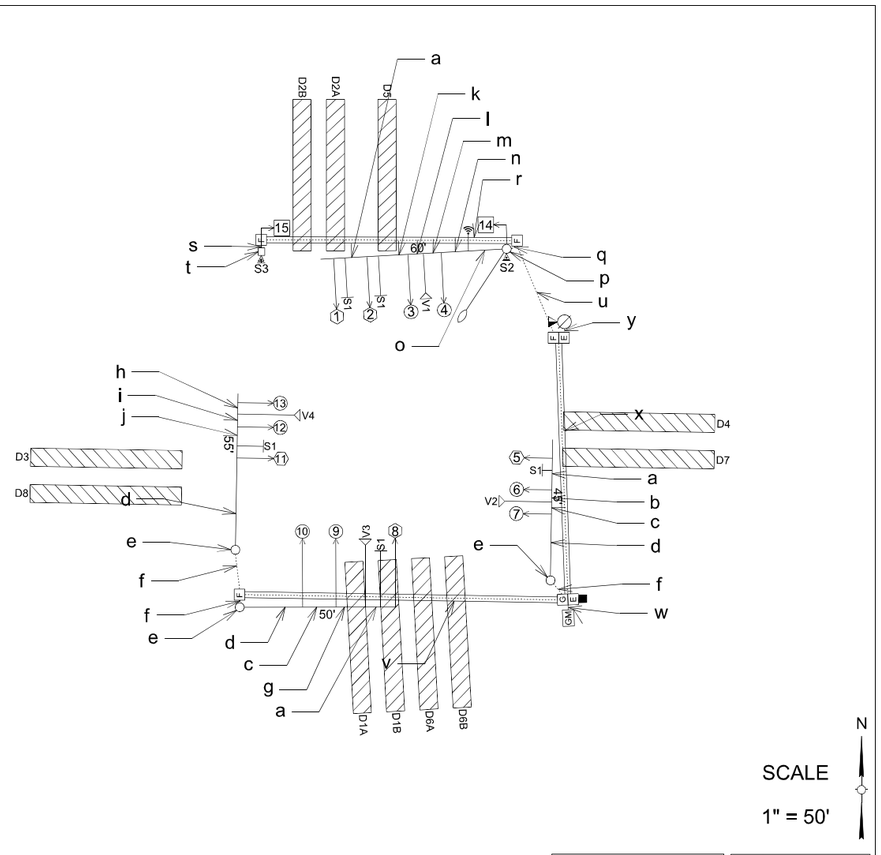

WIRING DIAGRAM | NOT TO SCALE

INTERSECTION: SULPHUR AVE. AT SAMPSON ST. | TSI #: 10-104 | PAGE X OF X

POWER SOURCE
WOOD POLE
METAL POLE
UTILITY POLE
MAST ARM
SPAN WIRE
S1 OVERHEAD SIGN & NO.
PM POLE MOUNTED CABINET & CONTROLLER
GM GROUND MOUNTED CABINET & CONTROLLER
SIGNAL POWER PEDESTAL W/ DISCONNECT
WIRELESS INTERCONNECT
M1A WIRELESS VDS
VDS WIRELESS VDS RECIEVER
D4 VIDEO DETECTION ZONE & NO.
V1 VIDEO DETECTION
D4 LOOP DETECTOR & NO.
CABLES IN JACKED OR BORED CONDUIT
TRENCHED AND BACKFILLED CONDUIT
F SIGNAL JUNCTION BOX
SIGNAL FACE & NO.
SIGNAL FACE WITH ARROWS & NO.
PEDESTAL MOUNT SIGNAL & NO.
PEDESTRIAN SIGNAL & NO.
PED BUTTON & SIGN
AUDIBLE PED BUTTON & SIGN
R1 RADAR DETECTION

SIGNAL WIRING TABLE

WIRING CODE	WIRING TYPE VIDEO	2C	3C POWER	3C	6C	10C	INTERCONNECT Wireless	CONDUIT NO.	CONDUIT SIZE	TYPE
a						1				OH
b						1				OH
c	1					1				OH
d	1				1	1				OH
e	1				1	1				IP
f	1					2		2	2"	TB
g	1					1				OH
h										OH
i	1									OH
j	1				1					OH
k						2				OH
l						2				OH

OH - OVERHEAD JB - JACK OR BORE TB - TRENCH AND BACKFILL
SC- SAW CUT IP - INSIDE POLE
WIRING CODE TABLE VERSION 3.2

SIGNAL WIRING TABLE

WIRING CODE	WIRING TYPE VIDEO	2C	3C POWER	3C	6C	10C	INTERCONNECT Wireless	CONDUIT NO.	CONDUIT SIZE	TYPE
m	1				1	2				OH
n	1				2	2				OH
o	1				2	2	1			OH
p	1	2			2	2	1			IF
q	1	2				3	1	2	3"	TB
r		1			1			1	3"	JB
s		1			1			2	1"	TB
t		1			1					IF
u	1	3			1	3	1	2	3"	TB
v	2					4		1	3"	JB
w	3	3	1			9	1	3	3"	TB
x	1	3	1	1	3	1		2	3"	JB
y		1						1	2"	TB

OH - OVERHEAD JB - JACK OR BORE TB - TRENCH AND BACKFILL
SC- SAW CUT IP - INSIDE POLE
WIRING CODE TABLE VERSION 3.2

SHEET NUMBER	2
PARISH	CALCASIEU
CONTROL SECTION	
STATE PROJECT	H.00393 1
DESIGN J. COOK / CHECK A. DEITCH	
DETAIL J. COOK / CHECK A. DEITCH	
REVIEW	SERIES # 2 OF 6

RFP PHASE - PRELIMINARY SIGNAL PLANS

PRELIMINARY
NOT FOR CONSTRUCTION
ENGINEER: ARI DEITCH
LICENSE #: 41842
DATE: 04/19/2023

NO.	DATE	REVISION OR CHANGE ORDER DESCRIPTION

TRAFFIC SIGNAL PLANS
SULPHUR AVE. AT SAMPSON ST.

I-10; CALCASIEU RIVER BRIDGE P3

DOTD LOUISIANA DEPARTMENT OF TRANSPORTATION & DEVELOPMENT

CBP CALCASIEU BRIDGE PARTNERS

TECHNICAL PROPOSAL

04/19/23

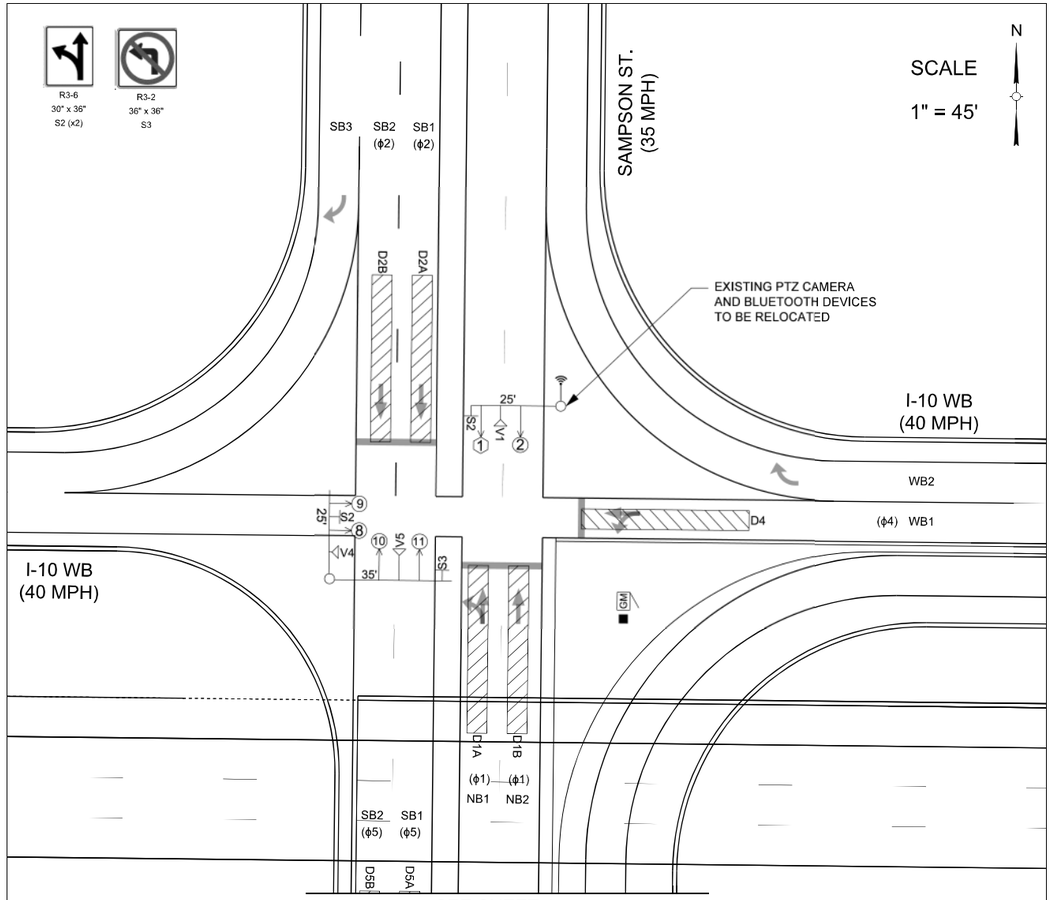

BACKPLATES: YES [X] NO [ ] | SIGNAL HEAD HEIGHT: 17 FT | SKETCH OF INTERSECTION | NOT TO SCALE

INTERSECTION: SAMPSON ST. AT I-10 WB | TSI #: 10-105 | PAGE X OF X

GM GROUND MOUNTED CABINET & CONTROLLER
PM POLE MOUNTED CABINET & CONTROLLER
SIGNAL POWER PEDESTAL W/ DISCONNECT
S1 OVERHEAD SIGN & NO.
S1 GROUND MOUNT SIGN & NO.
PARALLEL PARKING
POWER SOURCE
WOOD POLE
METAL POLE
UTILITY POLE
MAST ARM
SPAN WIRE
STOP BAR
PEDESTAL MOUNT SIGNAL & NO.
SIGNAL FACE & NO.
SIGNAL FACE WITH ARROWS & NO.
PEDESTRIAN SIGNAL & NO.
PED BUTTON & SIGN
AUDIBLE PED BUTTON & SIGN
PED CROSS WALK
D4 LOOP DETECTOR & NO.
D4 VIDEO DETECTION ZONE & NO.
V1 VIDEO DETECTION
VDS WIRELESS VDS RECIEVER
R1 RADAR DETECTION
M1A WIRELESS VDS
WIRELESS INTERCONNECT

EXISTING SPEED LIMITS
SAMPSON ST. - 35 MPH
I-10 WB - 40 MPH

SIGNAL FACES	2,8,9, 10,11				1						
TOTALS	5				1						
DK = DARK R = RED Y = YELLOW G = GREEN G = GREEN ARROW Y = YELLOW ARROW SY = STEADY YELLOW ARROW FY = FLASHING YELLOW ARROW 8" = 8" DIA. LENS 12" = 12" DIA. LENS OP = OPTICALLY PROGRAMED LENS	R Y G	R Y G	R Y G	R Y G	R Y G G	R Y G G	R Y G G	R Y G G	R SY FY	R SY FY G	PED 88

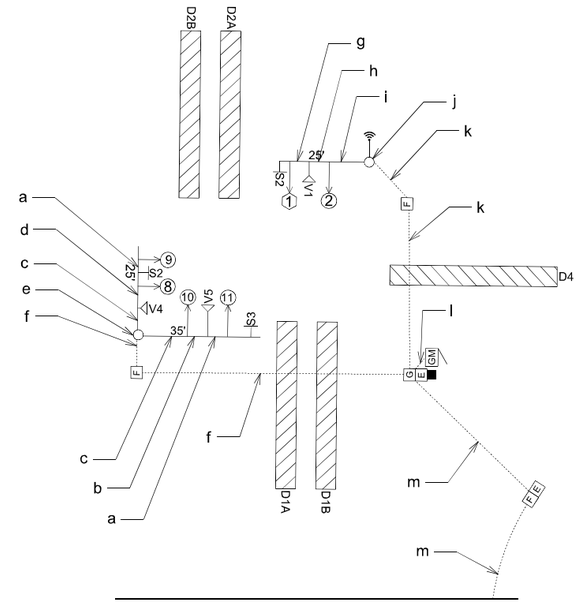

INTERSECTION: SAMPSON ST. AT I-10 WB | TSI #: 10-105 | PAGE X OF X

WIRING DIAGRAM | NOT TO SCALE

POWER SOURCE
WOOD POLE
METAL POLE
UTILITY POLE
MAST ARM
SPAN WIRE
S1 OVERHEAD SIGN & NO.
PM POLE MOUNTED CABINET & CONTROLLER
GM GROUND MOUNTED CABINET & CONTROLLER
SIGNAL POWER PEDESTAL W/ DISCONNECT
WIRELESS INTERCONNECT
M1A WIRELESS VDS
R1 RADAR DETECTION
VDS WIRELESS VDS RECIEVER
D4 VIDEO DETECTION ZONE & NO.
V1 VIDEO DETECTION
D4 LOOP DETECTOR & NO.
CABLES IN JACKED OR BORED CONDUIT
TRENCHED AND BACKFILLED CONDUIT
F SIGNAL JUNCTION BOX
SIGNAL FACE & NO.
SIGNAL FACE WITH ARROWS & NO.
PEDESTAL MOUNT SIGNAL & NO.
PEDESTRIAN SIGNAL & NO.
PED BUTTON & SIGN
AUDIBLE PED BUTTON & SIGN

SIGNAL WIRING TABLE

WIRING CODE	WIRING TYPE								INTERCONNECT				CONDUIT		TYPE
	VIDEO	LOOP	2CLL	2C	MAG	3C POWER	3C	6C	10C	7C	Wireless	6 PAIR	FIBER	NO.	SIZE	
a								1								OH
b	1							1								OH
c	1							2								OH
d								2								OH
e	2							4								IP
f	2								2					2	2"	TB*
g									1							OH
h	1								1							OH
i	1							1	1							OH
j	1							1	1		1					IP
k	1								2		1			2	2"	TB*
l	3					1			4		1			3	3"	TB*
m	2					1			5					3	3"	TB*

OH - OVERHEAD JB - JACK OR BORE TB - TRENCH AND BACKFILL SC- SAW CUT IP - INSIDE POLE

WIRING CODE TABLE VERSION 3.2

TB* - conduit to be bridge-mounted/embedded

SHEET NUMBER 3

PARISH	CONTROL SECTION	STATE PROJECT
CALCASIEU		H.00393 1

DESIGN	CHECK	DETAIL	CHECK	REVIEW	SERIES #
J. COOK	A. DEITCH	J. COOK	A. DEITCH		3 OF 6

RFP PHASE - PRELIMINARY SIGNAL PLANS

PRELIMINARY
NOT FOR CONSTRUCTION
ENGINEER: ARI DEITCH
LICENSE #: 41842
DATE: 04/19/2023

NO.	DATE	REVISION OR CHANGE ORDER DESCRIPTION	BY

STATE OF LOUISIANA — DEPARTMENT OF TRANSPORTATION AND DEVELOPMENT

TRAFFIC SIGNAL PLANS
SAMPSON ST. AT I-10 WB

I-10: CALCASIEU RIVER BRIDGE P3

DOTD LOUISIANA DEPARTMENT OF TRANSPORTATION & DEVELOPMENT

CBP CALCASIEU BRIDGE PARTNERS

TECHNICAL PROPOSAL

04/19/23

SEE SHEET 3

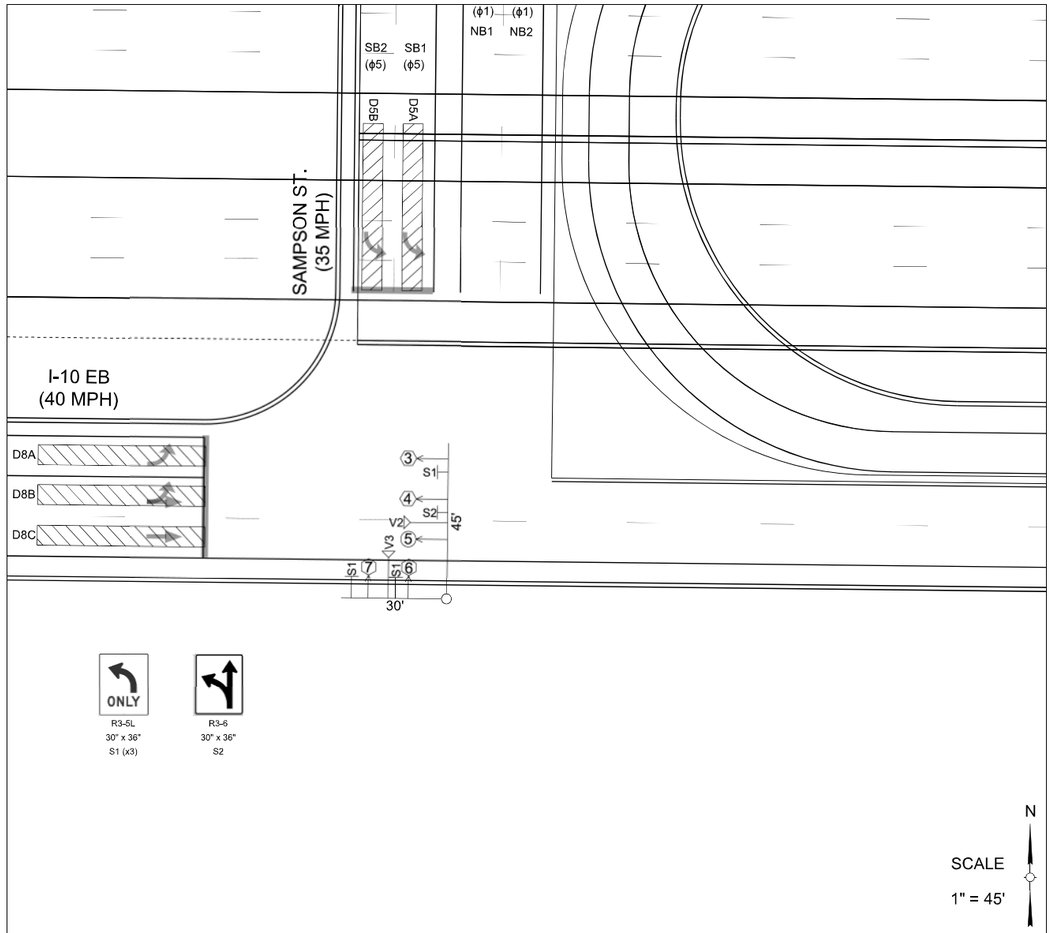

BACKPLATES: YES [X] NO [ ] | SIGNAL HEAD HEIGHT: 17 FT | SKETCH OF INTERSECTION | NOT TO SCALE

INTERSECTION: SAMPSON ST. AT I-10 EB | TSI #: 10-154 | PAGE X OF X

GM GROUND MOUNTED CABINET & CONTROLLER
PM POLE MOUNTED CABINET & CONTROLLER
SIGNAL POWER PEDESTAL W/ DISCONNECT
S1 OVERHEAD SIGN & NO.
S1 GROUND MOUNT SIGN & NO.
PARALLEL PARKING
POWER SOURCE
WOOD POLE
METAL POLE
UTILITY POLE
MAST ARM
SPAN WIRE
STOP BAR
PEDESTAL MOUNT SIGNAL & NO.
SIGNAL FACE & NO.
SIGNAL FACE WITH ARROWS & NO.
PEDESTRIAN SIGNAL & NO.
PED BUTTON & SIGN
AUDIBLE PED BUTTON & SIGN
PED CROSS WALK
D4 LOOP DETECTOR & NO.
D4 VIDEO DETECTION ZONE & NO.
V1 VIDEO DETECTION
WIRELESS VDS RECIEVER
R1 RADAR DETECTION
M1A WIRELESS VDS
WIRELESS INTERCONNECT

EXISTING SPEED LIMITS
SAMPSON ST. - 35 MPH
I-10 EB - 40 MPH

SIGNAL FACES	5		3,6,7		5						
TOTALS	1		3		1						
DK = DARK R = RED Y = YELLOW G = GREEN GA = GREEN ARROW YA = YELLOW ARROW SY = STEADY YELLOW ARROW FY = FLASHING YELLOW ARROW 8" = 8" DIA. LENS 12" = 12" DIA. LENS OP = OPTICALLY PROGRAMED LENS	R Y G	R Y G	R Y G	R Y G	R Y G G	R Y G G	R Y G G	R Y G G	R Y G G	R SY FY G	PED 88

SEE SHEET 3

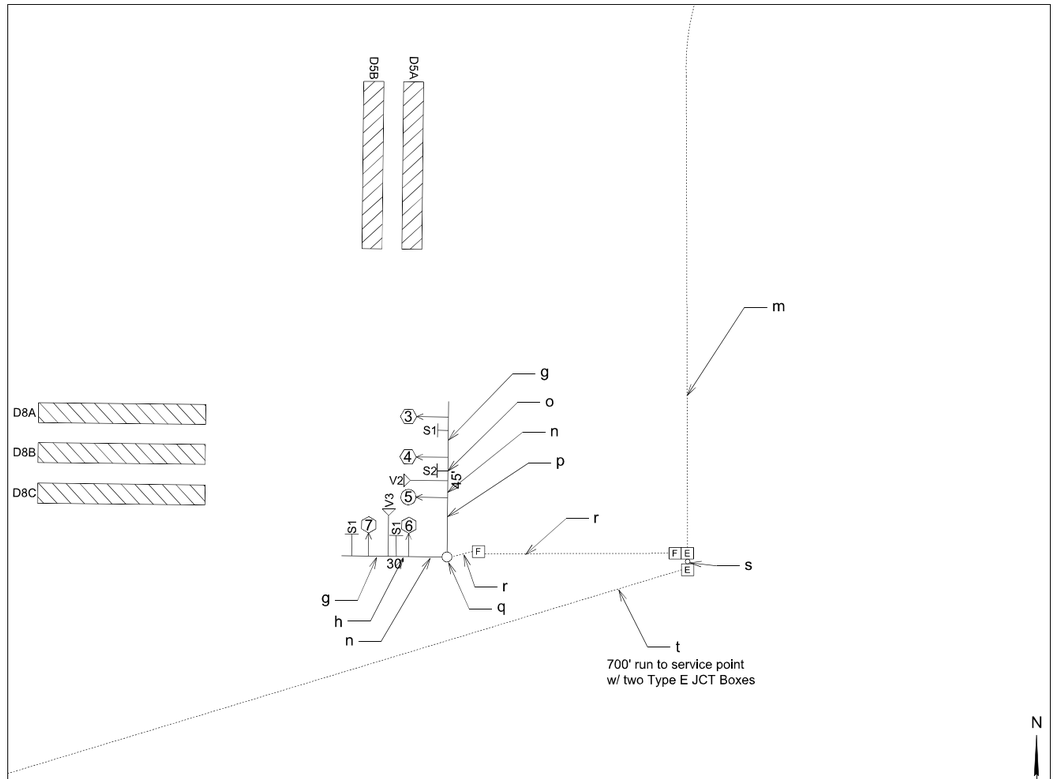

WIRING DIAGRAM | NOT TO SCALE

INTERSECTION: SAMPSON ST. AT I-10 EB | TSI #: 10-154 | PAGE X OF X

POWER SOURCE
WOOD POLE
METAL POLE
UTILITY POLE
MAST ARM
SPAN WIRE
S1 OVERHEAD SIGN & NO.
PM POLE MOUNTED CABINET & CONTROLLER
GM GROUND MOUNTED CABINET & CONTROLLER
SIGNAL POWER PEDESTAL W/ DISCONNECT
WIRELESS INTERCONNECT
M1A WIRELESS VDS
R1 RADAR DETECTION
WIRELESS VDS RECIEVER
D4 VIDEO DETECTION ZONE & NO.
V1 VIDEO DETECTION
D4 LOOP DETECTOR & NO.
CABLES IN JACKED OR BORED CONDUIT
TRENCHED AND BACKFILLED CONDUIT
F SIGNAL JUNCTION BOX
SIGNAL FACE & NO.
SIGNAL FACE WITH ARROWS & NO.
PEDESTAL MOUNT SIGNAL & NO.
PEDESTRIAN SIGNAL & NO.
PED BUTTON & SIGN
AUDIBLE PED BUTTON & SIGN

SIGNAL WIRING TABLE

WIRING CODE	WIRING TYPE								INTERCONNECT			CONDUIT		TYPE
	VIDEO	LOOP	2CLL	2C	MAG	3C POWER	3C	6C	10C	7C	Wireless	6 PAIR	FIBER	NO.	SIZE	
g									1							OH
h	1								1							OH
i																
j																
k																
l																
m	2					1			5					3	3"	TB*
n	1								2							OH
o									2							OH
p	1							1	2							OH
q	2							1	4							IP
r	2								5					2	3"	TB*
s						1								1	2"	TB*
t						1								1	2"	TB

OH - OVERHEAD JB - JACK OR BORE TB - TRENCH AND BACKFILL SC- SAW CUT IP - INSIDE POLE

WIRING CODE TABLE VERSION 3.2

TB* - conduit to be bridge-mounted; s - riser conduit from ground level along bridge support to deck

SHEET NUMBER 4

PARISH: CALCASIEU | CONTROL SECTION | STATE PROJECT: H.00393 1

DESIGN: J. COOK | CHECK: A. DEITCH | DETAIL: J. COOK | CHECK: A. DEITCH | REVIEW | SERIES #: 4 OF 6

RFP PHASE - PRELIMINARY SIGNAL PLANS

PRELIMINARY
NOT FOR CONSTRUCTION
ENGINEER: ARI DEITCH
LICENSE #: 41842
DATE: 04/19/2023

NO. | DATE | REVISION OR CHANGE ORDER DESCRIPTION | BY

TRAFFIC SIGNAL PLANS
SAMPSON ST. AT I-10 EB

I-10: CALCASIEU RIVER BRIDGE P3

DOTD LOUISIANA DEPARTMENT OF TRANSPORTATION & DEVELOPMENT

CBP CALCASIEU BRIDGE PARTNERS

TECHNICAL PROPOSAL

04/19/23

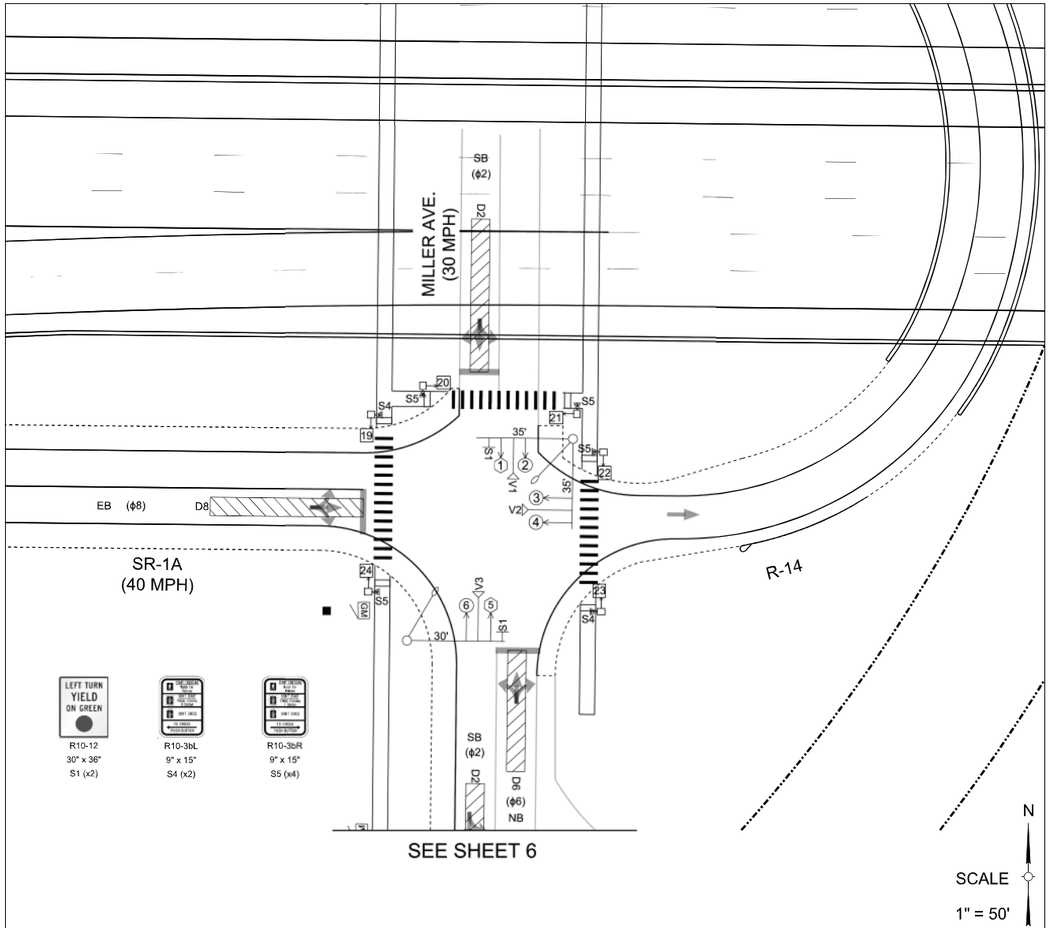

SEE SHEET 6

BACKPLATES: YES [X] NO [ ] | SIGNAL HEAD HEIGHT: 17 FT | SKETCH OF INTERSECTIONS | NOT TO SCALE

INTERSECTION: SR-1A AT MILLER AVE. | TSI #: 00-000 | PAGE X OF X

GM GROUND MOUNTED CABINET & CONTROLLER
PM POLE MOUNTED CABINET & CONTROLLER
■ SIGNAL POWER PEDESTAL W/ DISCONNECT
S1 OVERHEAD SIGN & NO.
S1 GROUND MOUNT SIGN & NO.
PARALLEL PARKING

POWER SOURCE
WOOD POLE
METAL POLE
UTILITY POLE
MAST ARM
SPAN WIRE
STOP BAR

2 PEDESTAL MOUNT SIGNAL & NO.
2 SIGNAL FACE & NO.
2 SIGNAL FACE WITH ARROWS & NO.
2 PEDESTRIAN SIGNAL & NO.
PED BUTTON & SIGN
AUDIBLE PED BUTTON & SIGN
PED CROSS WALK

D4 LOOP DETECTOR & NO.
D4 VIDEO DETECTION ZONE & NO.
V1 VIDEO DETECTION
VDS WIRELESS VDS RECIEVER
R1 RADAR DETECTION
M1A ■ WIRELESS VDS
WIRELESS INTERCONNECT

EXISTING SPEED LIMITS

SR-1A - 40 MPH

MILLER AVE. - 30 MPH

SIGNAL FACES	2,3,4,6						1,5				19,20,21, 22,23,24
TOTALS	4						2				6
DK = DARK R = RED Y = YELLOW G = GREEN ◄G = GREEN ARROW ◄Y = YELLOW ARROW ◄SY = STEADY YELLOW ARROW ◄FY = FLASHING YELLOW ARROW 8" = 8" DIA. LENS 12" = 12" DIA. LENS OP = OPTICALLY PROGRAMED LENS	R Y G	R Y G	R Y G	R Y G	R G G	R Y G	R Y Y G G	R Y Y G G	R Y Y G G	R SY FY G	PED 88

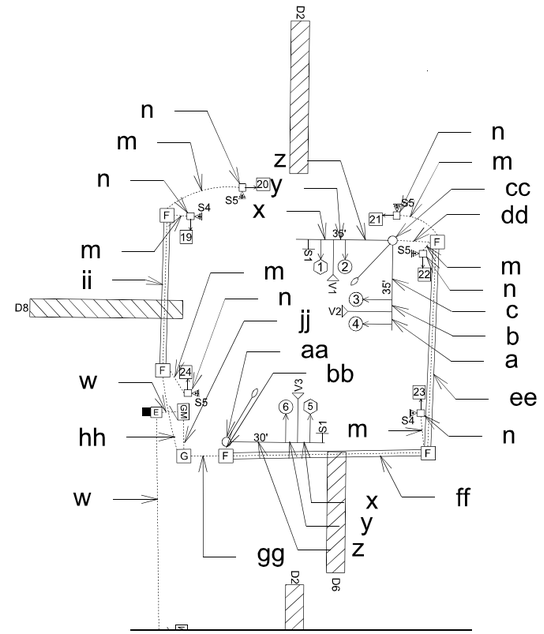

SEE SHEET 6

WIRING DIAGRAM | NOT TO SCALE

INTERSECTION: SR-1A AT MILLER AVE. | TSI #: 00-000 | PAGE X OF X

POWER SOURCE
WOOD POLE
METAL POLE
UTILITY POLE
MAST ARM
SPAN WIRE
S1 OVERHEAD SIGN & NO.
PM POLE MOUNTED CABINET & CONTROLLER
GM GROUND MOUNTED CABINET & CONTROLLER
■ SIGNAL POWER PEDESTAL W/ DISCONNECT
WIRELESS INTERCONNECT
M1A ■ WIRELESS VDS
VDS WIRELESS VDS RECIEVER
D4 VIDEO DETECTION ZONE & NO.
V1 VIDEO DETECTION
D4 LOOP DETECTOR & NO.
CABLES IN JACKED OR BORED CONDUIT
TRENCHED AND BACKFILLED CONDUIT
F SIGNAL JUNCTION BOX

2 SIGNAL FACE & NO.
2 SIGNAL FACE WITH ARROWS & NO.
2 PEDESTAL MOUNT SIGNAL & NO.
2 PEDESTRIAN SIGNAL & NO.
PED BUTTON & SIGN
AUDIBLE PED BUTTON & SIGN
R1 RADAR DETECTION

SIGNAL WIRING TABLE

WIRING CODE	WIRING TYPE						CONDUIT		TYPE
	VIDEO	2C	3C POWER	3C	6C	10C	NO.	SIZE	
a					1				OH
b	1				1				OH
c	1				2				OH
d	1				2				IP
e	1					1	2	2"	TB
f	1		2			1	1	3"	JB
g					2				OH
h					2	1			OH
i	1				2	1			OH
j	1				3	1			OH
k	1				3	1			IP
l	1				1	2	2	2"	TB
m		1			1		2	1"	TB
n		1			1				IP
o					1	1			OH
p	1				3	1			OH
q	1	1			3	1			IP
r	1	1			1	2			OH

OH - OVERHEAD JB - JACK OR BORE
TB - TRENCH AND BACKFILL SC- SAW CUT IP - INSIDE POLE
WIRING CODE TABLE VERSION 3.2

SIGNAL WIRING TABLE

WIRING CODE	WIRING TYPE						CONDUIT		TYPE
	VIDEO	2C	3C POWER	3C	6C	10C	NO.	SIZE	
s	1					1	2	2"	JB
t	2	1			1	3	1	3"	TB
u	2	1	2		2	3	2	3"	JB
v	4	3			4	6	3	3"	TB
w			1				2	2"	TB
x						1			OH
y	1					1			OH
z	1				1	1			OH
aa	1	1			1	1			IP
bb	1	1			1	1	2	3"	TB
cc	2	1			3	1			IP
dd	2	1			1	2	2	3"	TB
ee	2	3			3	2	1	3"	JB
ff	2	4			4	2	1	3"	JB
gg	3	5			5	3	2	3"	TB
hh		3			3		1	2"	TB
ii		2			2		1	2"	JB
jj	3	8			8	3	3	3"	TB
kk			2				1	3"	TB
ll			2				1	3"	JB

OH - OVERHEAD JB - JACK OR BORE
TB - TRENCH AND BACKFILL SC- SAW CUT IP - INSIDE POLE
WIRING CODE TABLE VERSION 3.2

SHEET NUMBER	5
PARISH	CALCASIEU
CONTROL SECTION	
STATE PROJECT	H.00393 1
DESIGN J. COOK / CHECK A. DEITCH	SERIES # 5 OF 6
DETAIL J. COOK / CHECK A. DEITCH	REVIEW

RFP PHASE - PRELIMINARY SIGNAL PLANS

PRELIMINARY
NOT FOR CONSTRUCTION
ENGINEER: ARI DEITCH
LICENSE #: 41842
DATE: 04/19/2023

NO.	DATE	REVISION OR CHANGE ORDER DESCRIPTION	BY

TRAFFIC SIGNAL PLANS
SR-1A AT MILLER AVE.

I-10: CALCASIEU RIVER BRIDGE P3

DOTD LOUISIANA DEPARTMENT OF TRANSPORTATION & DEVELOPMENT

CBP CALCASIEU BRIDGE PARTNERS

TECHNICAL PROPOSAL

04/19/23

SEE SHEET 5

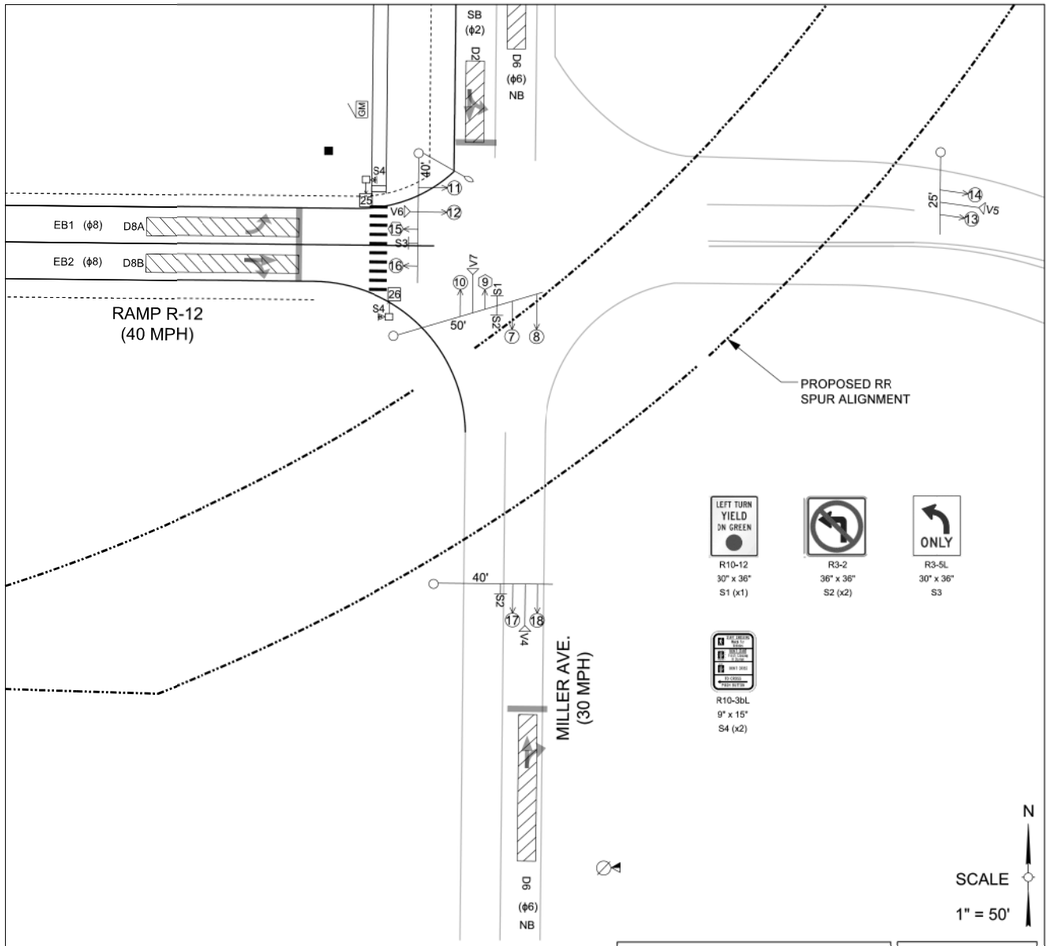

BACKPLATES: YES [X] NO [ ] | SIGNAL HEAD HEIGHT: 17 FT | SKETCH OF INTERSECTIONS | NOT TO SCALE

INTERSECTION: RAMP R-12 AT MILLER AVE. | TSI #: 00-000 | PAGE X OF X

GM GROUND MOUNTED CABINET & CONTROLLER
PM POLE MOUNTED CABINET & CONTROLLER
SIGNAL POWER PEDESTAL W/ DISCONNECT
S1 OVERHEAD SIGN & NO.
S1 GROUND MOUNT SIGN & NO.
PARALLEL PARKING
POWER SOURCE
WOOD POLE
METAL POLE
UTILITY POLE
MAST ARM
SPAN WIRE
STOP BAR
PEDESTAL MOUNT SIGNAL & NO.
SIGNAL FACE & NO.
SIGNAL FACE WITH ARROWS & NO.
PEDESTRIAN SIGNAL & NO.
PED BUTTON & SIGN
AUDIBLE PED BUTTON & SIGN
PED CROSS WALK
D4 LOOP DETECTOR & NO.
D4 VIDEO DETECTION ZONE & NO.
V1 VIDEO DETECTION
VDS WIRELESS VDS RECIEVER
R1 RADAR DETECTION
M1A WIRELESS VDS
WIRELESS INTERCONNECT

EXISTING SPEED LIMITS

RAMP R-12 - 40 MPH

MILLER AVE. - 30 MPH

SIGNAL FACES	7,8,10,11,12 13,14,16,17,18				15		9				25,26
TOTALS	10				1		1				2
DK = DARK R = RED Y = YELLOW G = GREEN = GREEN ARROW = YELLOW ARROW SY = STEADY YELLOW ARROW FY = FLASHING YELLOW ARROW 6" = 8" DIA. LENS 12" = 12" DIA. LENS OP = OPTICALLY PROGRAMED LENS	R Y G	R Y G	R Y G	R Y G	R Y G	R Y G	R Y G	R Y G	R Y G	R SY FY G	R SY FY G	PED 88

SEE SHEET 5

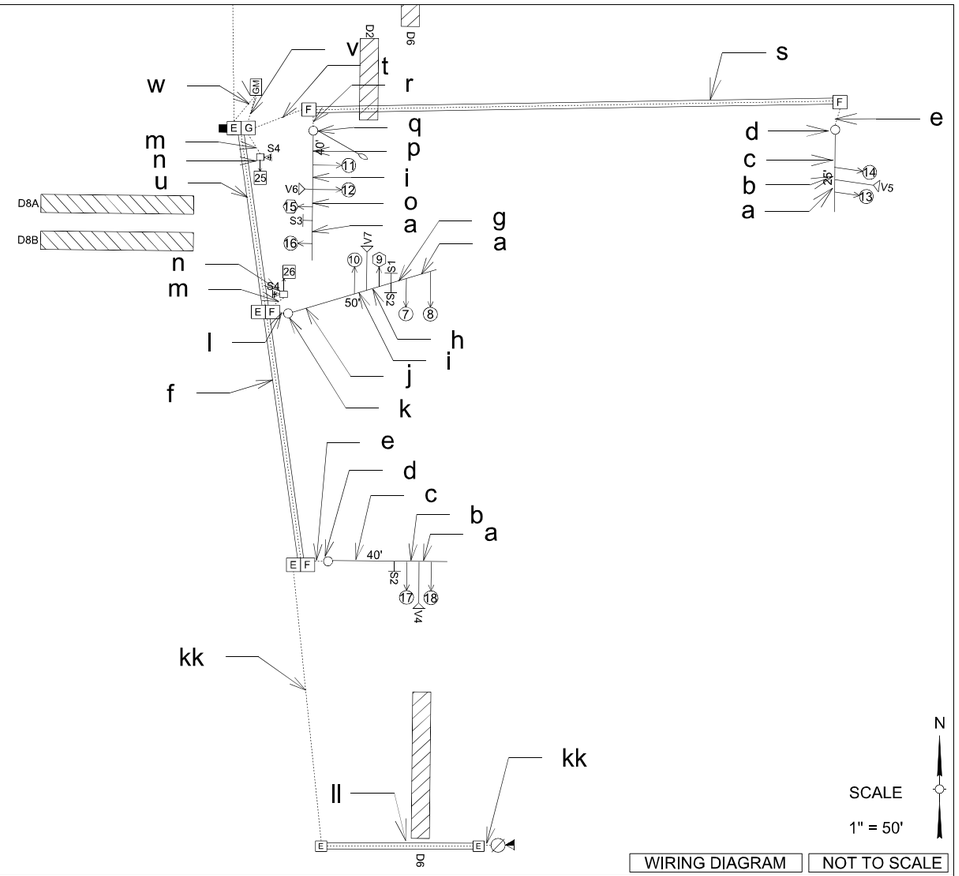

WIRING DIAGRAM | NOT TO SCALE

INTERSECTION: RAMP R-12 AT MILLER AVE. | TSI #: 00-000 | PAGE X OF X

POWER SOURCE
WOOD POLE
METAL POLE
UTILITY POLE
MAST ARM
SPAN WIRE
S1 OVERHEAD SIGN & NO.
PM POLE MOUNTED CABINET & CONTROLLER
GM GROUND MOUNTED CABINET & CONTROLLER
SIGNAL POWER PEDESTAL W/ DISCONNECT
WIRELESS INTERCONNECT
M1A WIRELESS VDS
R1 RADAR DETECTION
VDS WIRELESS VDS RECIEVER
D4 VIDEO DETECTION ZONE & NO.
V1 VIDEO DETECTION
D4 LOOP DETECTOR & NO.
CABLES IN JACKED OR BORED CONDUIT
TRENCHED AND BACKFILLED CONDUIT
F SIGNAL JUNCTION BOX
SIGNAL FACE & NO.
SIGNAL FACE WITH ARROWS & NO.
PEDESTAL MOUNT SIGNAL & NO.
PEDESTRIAN SIGNAL & NO.
PED BUTTON & SIGN
AUDIBLE PED BUTTON & SIGN

SIGNAL WIRING TABLE

WIRING CODE	WIRING TYPE						CONDUIT		TYPE
	VIDEO	2C	3C POWER	3C	6C	10C	NO.	SIZE	
a					1				OH
b	1				1				OH
c	1				2				OH
d	1				2				IP
e	1					1	2	2"	TB
f	1		2			1	1	3"	JB
g					2				OH
h					2	1			OH
i	1				2	1			OH
j	1				3	1			OH
k	1				3	1			IP
l	1				1	2	2	2"	TB
m		1			1		2	1"	TB
n		1			1				IP
o					1	1			OH
p	1				3	1			OH
q	1	1			3	1			IP
r	1	1			1	2			OH

OH - OVERHEAD JB - JACK OR BORE
TB - TRENCH AND BACKFILL SC- SAW CUT IP - INSIDE POLE
WIRING CODE TABLE VERSION 3.2

SIGNAL WIRING TABLE

WIRING CODE	WIRING TYPE						CONDUIT		TYPE
	VIDEO	2C	3C POWER	3C	6C	10C	NO.	SIZE	
s	1					1	2	2"	JB
t	2	1			1	3	1	3"	TB
u	2	1	2		2	3	2	3"	JB
v	4	3			4	6	3	3"	TB
w			1				2	2"	TB
x						1			OH
y	1					1			OH
z	1				1	1			OH
aa	1	1			1	1			IP
bb	1	1			1	1	2	3"	TB
cc	2	1			3	1			IP
dd	2	1			1	2	2	3"	TB
ee	2	3			3	2	1	3"	JB
ff	2	4			4	2	1	3"	JB
gg	3	5			5	3	2	3"	TB
hh		3			3		1	2"	TB
ii		2			2		1	2"	JB
jj	3	8			8	3	3	3"	TB
kk			2				1	3"	TB
ll			2				1	3"	JB

OH - OVERHEAD JB - JACK OR BORE
TB - TRENCH AND BACKFILL SC- SAW CUT IP - INSIDE POLE
WIRING CODE TABLE VERSION 3.2

SHEET NUMBER	6
PARISH	CALCASIEU
CONTROL SECTION	
STATE PROJECT	H.00393 1
DESIGN J. COOK / CHECK A. DEITCH	
DETAIL J. COOK / CHECK A. DEITCH	
REVIEW	SERIES # 6 OF 6

RFP PHASE - PRELIMINARY SIGNAL PLANS

PRELIMINARY
NOT FOR CONSTRUCTION
ENGINEER: ARI DEITCH
LICENSE #: 41842
DATE: 04/19/2023

NO.	DATE	REVISION OR CHANGE ORDER DESCRIPTION	BY

TRAFFIC SIGNAL PLANS
RAMP R-12 AT MILLER AVE.

I-10; CALCASIEU RIVER BRIDGE P.3

DOTD LOUISIANA DEPARTMENT OF TRANSPORTATION & DEVELOPMENT

CBP CALCASIEU BRIDGE PARTNERS

TECHNICAL PROPOSAL

04/19/23

REMARKS

Ⓔ REMOVE EXISTING SIGN

LEGEND

EXISTING OVERHEAD STRUCTURE

I-10 BASELINE



SEE SHEET 8

0 50′ 100′

SCALE: 1"=100′

SHEET NUMBER	7
PARISH	CALCASIEU
CONTROL SECTION	450-91
STATE PROJECT	H.003931
DESIGN	M. AGUIRRE
CHECK	A. DEITCH
DETAIL	M. AGUIRRE
CHECK	A. DEITCH
REVIEW	
SERIES #	1 OF 31

TECHNICAL PROPOSAL
PRELIMINARY
NOT FOR CONSTRUCTION
ENGINEER:
ART DEITCH
LICENSE #:
41842
DATE:
04/19/2023

NO.	DATE	REVISION OR CHANGE ORDER DESCRIPTION	BY

EXISTING SIGN REMOVALS

I-10 CALCASIEU RIVER BRIDGE P3

DOTD LOUISIANA DEPARTMENT OF TRANSPORTATION & DEVELOPMENT

CBP CALCASIEU BRIDGE PARTNERS

TECHNICAL PROPOSAL

04/19/23

REMARKS

Ⓔ REMOVE EXISTING SIGN

LEGEND

EXISTING OVERHEAD STRUCTURE

I-10 BASELINE



SEE SHEET 7

SEE SHEET 9

0 50′ 100′

SCALE: 1"=100′

N

SHEET NUMBER 8

PARISH CALCASIEU

CONTROL SECTION 450-91

STATE PROJECT H.003931

DESIGN M. AGUIRRE
CHECK A. DEITCH
DETAIL M. AGUIRRE
CHECK A. DEITCH
REVIEW
SERIES # 2 OF 31

TECHNICAL PROPOSAL

PRELIMINARY

NOT FOR CONSTRUCTION

ENGINEER:
ART DEITCH

LICENSE #:
41842

DATE:
04/19/2023

NO.	DATE	REVISION OR CHANGE ORDER DESCRIPTION	BY

SEAL OF LOUISIANA

EXISTING SIGN REMOVALS

I-10 CALCASIEU RIVER BRIDGE P3

DOTD LOUISIANA DEPARTMENT OF TRANSPORTATION & DEVELOPMENT

CBP CALCASIEU BRIDGE PARTNERS

TECHNICAL PROPOSAL

04/19/23

LEGEND

I-10 BASELINE

1280+00

1285+00

1290+00

I-10 WB

I-10 EB

SEE SHEET 8

SEE SHEET 10

N

0 50' 100'

SCALE: 1"=100'

SHEET NUMBER	9
PARISH	CALCASIEU
CONTROL SECTION	450-91
STATE PROJECT	H.003931
DESIGN	M. AGUIRRE
CHECK	A. DEITCH
DETAIL	M. AGUIRRE
CHECK	A. DEITCH
REVIEW	
SERIES #	3 OF 31

TECHNICAL PROPOSAL

PRELIMINARY

NOT FOR CONSTRUCTION

ENGINEER: ART DEITCH

LICENSE #: 41842

DATE: 04/19/2023

NO.	DATE	REVISION OR CHANGE ORDER DESCRIPTION	BY

EXISTING SIGN REMOVALS

I-10 CALCASIEU RIVER BRIDGE P3

LOUISIANA DEPARTMENT OF TRANSPORTATION & DEVELOPMENT

CALCASIEU BRIDGE PARTNERS

TECHNICAL PROPOSAL

04/19/23

REMARKS

Ⓔ REMOVE EXISTING SIGN

Ⓕ REMOVE EXISTING SIGN AND SUPPORTS

Ⓤ REMOVE EXISTING SIGN AND FASCIA MOUNT SUPPORT

LEGEND

EXISTING "TYPE A" OR "TYPE B" OR

I-10 BASELINE

Bayou D'Inde Poss

1295+00

1300+00

SEE SHEET 9

SEE SHEET 11

I-10 WB

I-10 EB

I-210 On-Ramp

I-210 Off-Ramp

STA. 1294+88

STA. 1303+40

EXIT 25

EAST I-210 Lake Charles BY-PASS

EXIT ONLY

EAST I-10 Lake Charles

104-1(1)

104-1(2)

EAST I-10 MILE 25

104-2

0 50′ 100′

SCALE: 1"=100′

SHEET NUMBER	10
PARISH	CALCASIEU
CONTROL SECTION	450-91
STATE PROJECT	H.003931
DESIGN	M. AGUIRRE
CHECK	A. DEITCH
DETAIL	M. AGUIRRE
CHECK	A. DEITCH
REVIEW	
SERIES #	4 OF 31

TECHNICAL PROPOSAL

PRELIMINARY

NOT FOR CONSTRUCTION

ENGINEER:
ARI DEITCH

LICENSE #:
41842

DATE:
04/19/2023

NO.	DATE	REVISION OR CHANGE ORDER DESCRIPTION	BY

EXISTING SIGN REMOVALS

I-10 CALCASIEU RIVER BRIDGE P3

DOTD LOUISIANA DEPARTMENT OF TRANSPORTATION & DEVELOPMENT

CBP CALCASIEU BRIDGE PARTNERS

TECHNICAL PROPOSAL

04/19/23

REMARKS

Ⓔ REMOVE EXISTING SIGN

LEGEND

EXISTING OVERHEAD STRUCTURE

I-10 BASELINE

1305+00

1310+00

1315+00

I-210 On-Ramp

I-10 WB

I-10 EB

I-210 Off-Ramp

SEE SHEET 10

SEE SHEET 12

STA. 1313+67

EXIT 26

PPG Drive

1 MILE

105-1

0 50' 100'

SCALE: 1"=100'

SHEET NUMBER 11

PARISH CALCASIEU

CONTROL SECTION 450-91

STATE PROJECT H.003931

DESIGN M. AGUIRRE

CHECK A. DEITCH

DETAIL M. AGUIRRE

CHECK A. DEITCH

REVIEW

SERIES # 5 OF 31

TECHNICAL PROPOSAL

PRELIMINARY

NOT FOR CONSTRUCTION

ENGINEER: ART DEITCH

LICENSE #: 41842

DATE: 04/19/2023

NO.	DATE	REVISION OR CHANGE ORDER DESCRIPTION	BY

EXISTING SIGN REMOVALS

I-10 CALCASIEU RIVER BRIDGE P3

DOTD LOUISIANA DEPARTMENT OF TRANSPORTATION & DEVELOPMENT

CBP CALCASIEU BRIDGE PARTNERS

TECHNICAL PROPOSAL

04/19/23

REMARKS

Ⓕ REMOVE EXISTING SIGN AND SUPPORTS

LEGEND

P
b EXISTING "TYPE D" SIGN

---- I-10 BASELINE



0 50′ 100′

SCALE: 1"=100′

N

SHEET NUMBER	12
PARISH	CALCASIEU
CONTROL SECTION	450-91
STATE PROJECT	H.003931
DESIGN	M. AGUIRRE
CHECK	A. DEITCH
DETAIL	M. AGUIRRE
CHECK	A. DEITCH
REVIEW	
SERIES #	6 OF 31

TECHNICAL PROPOSAL

PRELIMINARY
NOT FOR CONSTRUCTION

ENGINEER:
ARI DEITCH

LICENSE #:
41842

DATE:
04/19/2023

NO.	DATE	REVISION OR CHANGE ORDER DESCRIPTION	BY

EXISTING SIGN REMOVALS

I-10 CALCASIEU RIVER BRIDGE P3

DOTD LOUISIANA DEPARTMENT OF TRANSPORTATION & DEVELOPMENT

CBP CALCASIEU BRIDGE PARTNERS

TECHNICAL PROPOSAL

04/19/23

REMARKS

Ⓔ REMOVE EXISTING SIGN

Ⓕ REMOVE EXISTING SIGN AND SUPPORTS

Ⓣ REMOVE CANTILEVER AND FOOTING

LEGEND

EXISTING OVERHEAD STRUCTURE

EXISTING "TYPE A" OR "TYPE B"

I-10 BASELINE

1330+00

1335+00

1340+00

I-210 Off-Ramp

I-10 WB

I-10 EB

I-210 On-Ramp

STA. 1338+16

EXIT 25 Ⓕ

107-1

STA. 1341+90

EXIT 25 Ⓔ Ⓔ Ⓣ

INTERSTATE 210 EAST

Lake Charles BY-PASS

107-2

SEE SHEET 12

SEE SHEET 14

0 50′ 100′

SCALE: 1"=100′

SHEET NUMBER 13

PARISH	CONTROL SECTION	STATE PROJECT
CALCASIEU	450-91	H.003931

DESIGN	M. AGUIRRE	DETAIL	M. AGUIRRE
CHECK	A. DEITCH	CHECK	A. DEITCH
REVIEW		SERIES #	7 OF 31

TECHNICAL PROPOSAL

PRELIMINARY

NOT FOR CONSTRUCTION

ENGINEER: ART DEITCH

LICENSE #: 41842

DATE: 04/19/2023

NO.	DATE	REVISION OR CHANGE ORDER DESCRIPTION	BY

EXISTING SIGN REMOVALS

I-10 CALCASIEU RIVER BRIDGE P3

DOTD LOUISIANA DEPARTMENT OF TRANSPORTATION & DEVELOPMENT

CBP CALCASIEU BRIDGE PARTNERS

TECHNICAL PROPOSAL

04/19/23

REMARKS

Ⓔ REMOVE EXISTING SIGN

Ⓣ REMOVE CANTILEVER AND FOOTING

LEGEND

EXISTING OVERHEAD STRUCTURE

I-10 BASELINE



0 50′ 100′

SCALE: 1"=100′

N

SHEET NUMBER	14
PARISH	CALCASIEU
CONTROL SECTION	450-91
STATE PROJECT	H.003931
DESIGN	M. AGUIRRE
CHECK	A. DEITCH
DETAIL	M. AGUIRRE
CHECK	A. DEITCH
REVIEW	
SERIES #	8 OF 31

TECHNICAL PROPOSAL

PRELIMINARY

NOT FOR CONSTRUCTION

ENGINEER:
ART DEITCH

LICENSE #:
41842

DATE:
04/19/2023

NO.	DATE	REVISION OR CHANGE ORDER DESCRIPTION	BY

EXISTING SIGN REMOVALS

I-10 CALCASIEU RIVER BRIDGE P3

DOTD LOUISIANA DEPARTMENT OF TRANSPORTATION & DEVELOPMENT

CBP CALCASIEU BRIDGE PARTNERS

TECHNICAL PROPOSAL

04/19/23

REMARKS

Ⓔ REMOVE EXISTING SIGN

Ⓕ REMOVE EXISTING SIGN AND SUPPORTS

Ⓣ REMOVE CANTILEVER AND FOOTING

LEGEND

EXISTING OVERHEAD STRUCTURE

EXISTING "TYPE D" SIGN

I-10 BASELINE

1355+00

1360+00

1365+00

SEE SHEET 14

SEE SHEET 16

I-10 WB

I-10 EB

PPG DR. On-Ramp

PPG DR. Off-Ramp

STA. 1360+04

STA. 1364+00

EXIT 26 Ⓔ Ⓔ Ⓣ

PPG Drive

EXIT ONLY

109-1

EXIT 26 Ⓕ

109-2

0 50′ 100′

SCALE: 1"=100′

N

SHEET NUMBER 15

PARISH	CONTROL SECTION	STATE PROJECT
CALCASIEU	450-91	H.003931

DESIGN	M. AGUIRRE	DETAIL	M. AGUIRRE
CHECK	A. DEITCH	CHECK	A. DEITCH
REVIEW		SERIES #	9 OF 31

TECHNICAL PROPOSAL

PRELIMINARY

NOT FOR CONSTRUCTION

ENGINEER: ART DEITCH

LICENSE #: 41842

DATE: 04/19/2023

NO.	DATE	REVISION OR CHANGE ORDER DESCRIPTION	BY

EXISTING SIGN REMOVALS

I-10 CALCASIEU RIVER BRIDGE P3

DOTD LOUISIANA DEPARTMENT OF TRANSPORTATION & DEVELOPMENT

CBP CALCASIEU BRIDGE PARTNERS

TECHNICAL PROPOSAL

04/19/23

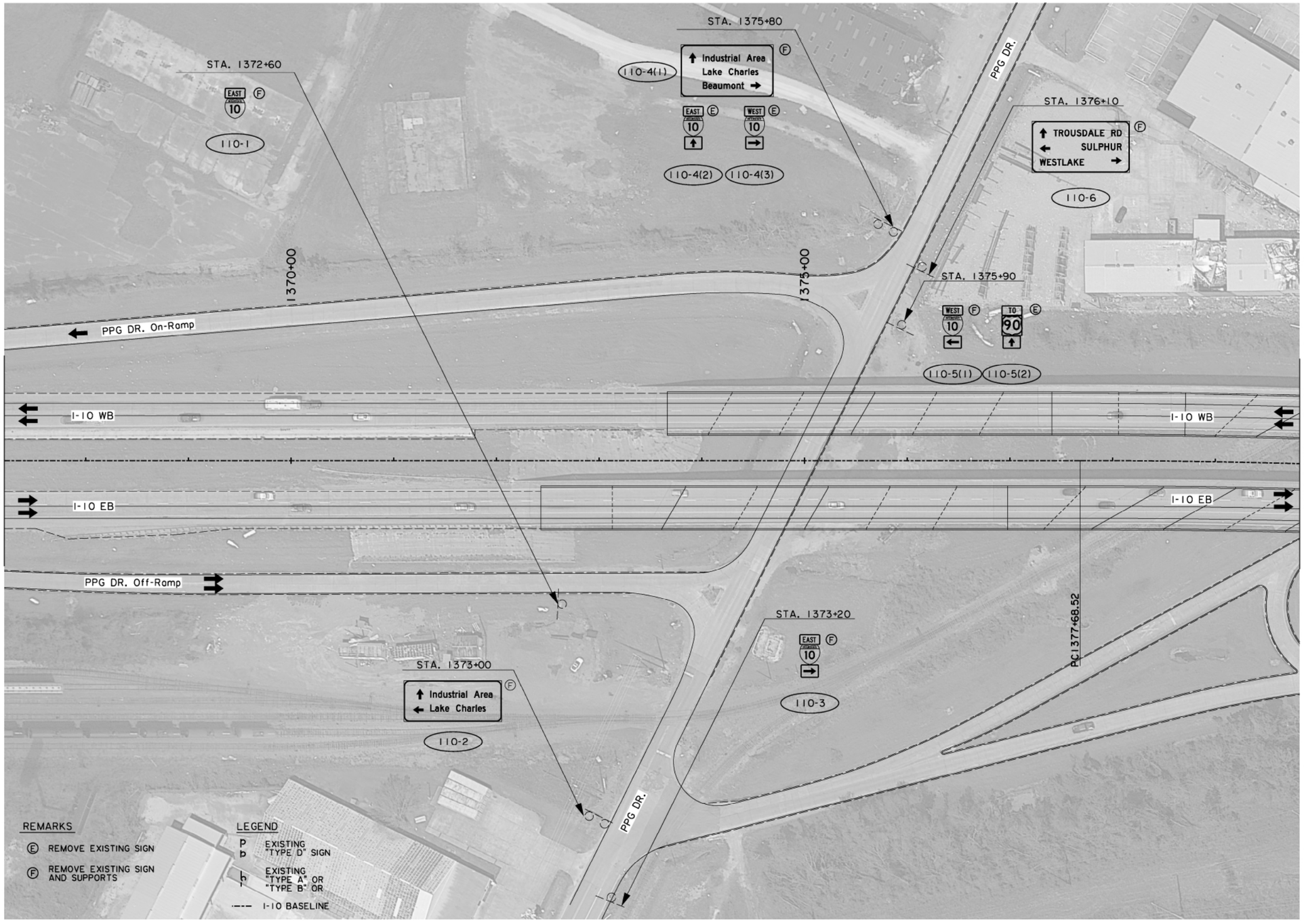

SHEET NUMBER	16

PARISH	CONTROL SECTION	STATE PROJECT
CALCASIEU	450-91	H.003931

DESIGN	M. AGUIRRE	SERIES #	10 OF 31
CHECK	A. DEITCH	REVIEW	
DETAIL	M. AGUIRRE		
CHECK	A. DEITCH		

TECHNICAL PROPOSAL

PRELIMINARY

NOT FOR CONSTRUCTION

ENGINEER:
ARI DEITCH

LICENSE #:
41842

DATE:
04/19/2023

NO.	DATE	REVISION OR CHANGE ORDER DESCRIPTION	BY

EXISTING SIGN REMOVALS

I-10 CALCASIEU RIVER BRIDGE P3

DOTD
LOUISIANA DEPARTMENT OF TRANSPORTATION & DEVELOPMENT

CBP
CALCASIEU BRIDGE PARTNERS

TECHNICAL PROPOSAL

04/19/23

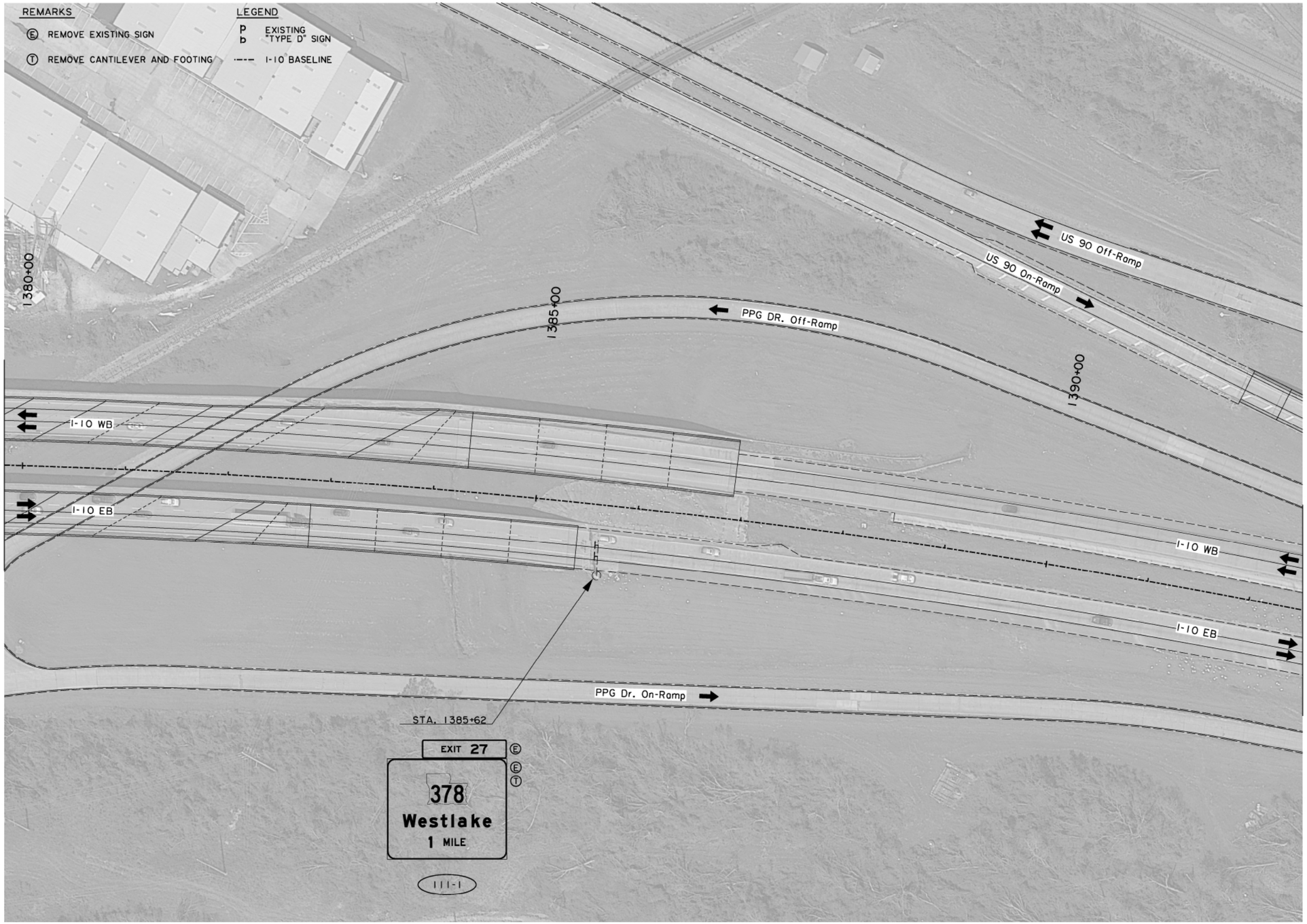

0 50′ 100′

SCALE: 1"=100′

N

SHEET NUMBER 17

PARISH	CONTROL SECTION	STATE PROJECT
CALCASIEU	450-91	H.003931

DESIGN	M. AGUIRRE	DETAIL	M. AGUIRRE
CHECK	A. DEITCH	CHECK	A. DEITCH
REVIEW		SERIES #	11 OF 31

TECHNICAL PROPOSAL

PRELIMINARY

NOT FOR CONSTRUCTION

ENGINEER:
ART DEITCH

LICENSE #:
41842

DATE:
04/19/2023

NO.	DATE	REVISION OR CHANGE ORDER DESCRIPTION	BY

EXISTING SIGN REMOVALS

I-10 CALCASIEU RIVER BRIDGE P3

DOTD LOUISIANA DEPARTMENT OF TRANSPORTATION & DEVELOPMENT

CBP CALCASIEU BRIDGE PARTNERS

TECHNICAL PROPOSAL

04/19/23

REMARKS

Ⓔ REMOVE EXISTING SIGN

Ⓕ REMOVE EXISTING SIGN AND SUPPORTS

Ⓣ REMOVE CANTILEVER AND FOOTING

LEGEND

EXISTING OVERHEAD STRUCTURE

EXISTING "TYPE A" OR "TYPE B" OR

I-10 BASELINE

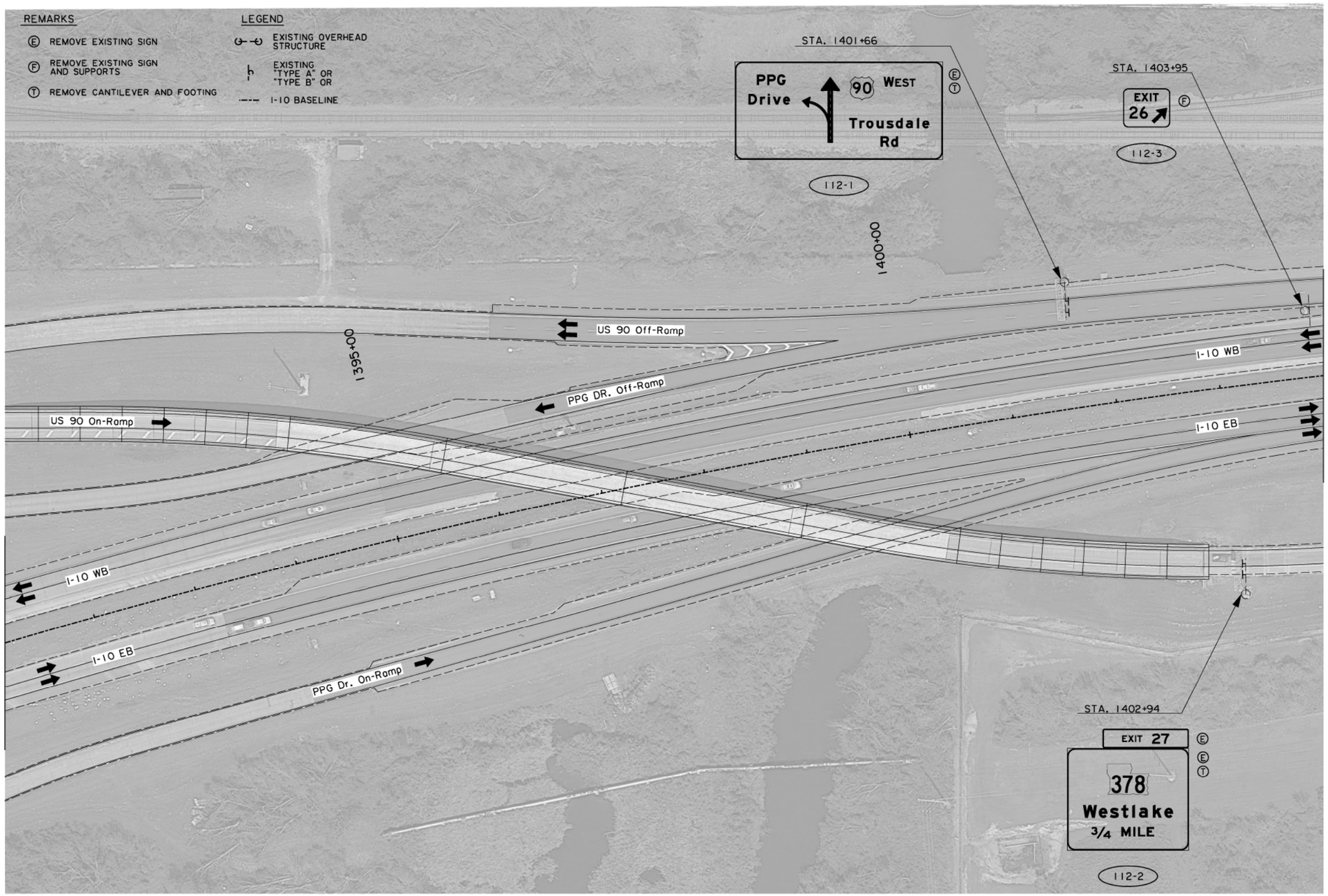

0 50' 100'

SCALE: 1"=100'

N

SHEET NUMBER	18
PARISH	CALCASIEU
CONTROL SECTION	450-91
STATE PROJECT	H.003931
DESIGN	M. AGUIRRE
CHECK	A. DEITCH
DETAIL	M. AGUIRRE
CHECK	A. DEITCH
REVIEW	
SERIES #	12 OF 31

TECHNICAL PROPOSAL

PRELIMINARY

NOT FOR CONSTRUCTION

ENGINEER: ARI DEITCH

LICENSE #: 41842

DATE: 04/19/2023

NO.	DATE	REVISION OR CHANGE ORDER DESCRIPTION	BY

EXISTING SIGN REMOVALS

I-10 CALCASIEU RIVER BRIDGE P3

DOTD LOUISIANA DEPARTMENT OF TRANSPORTATION & DEVELOPMENT

CBP CALCASIEU BRIDGE PARTNERS

TECHNICAL PROPOSAL

04/19/23

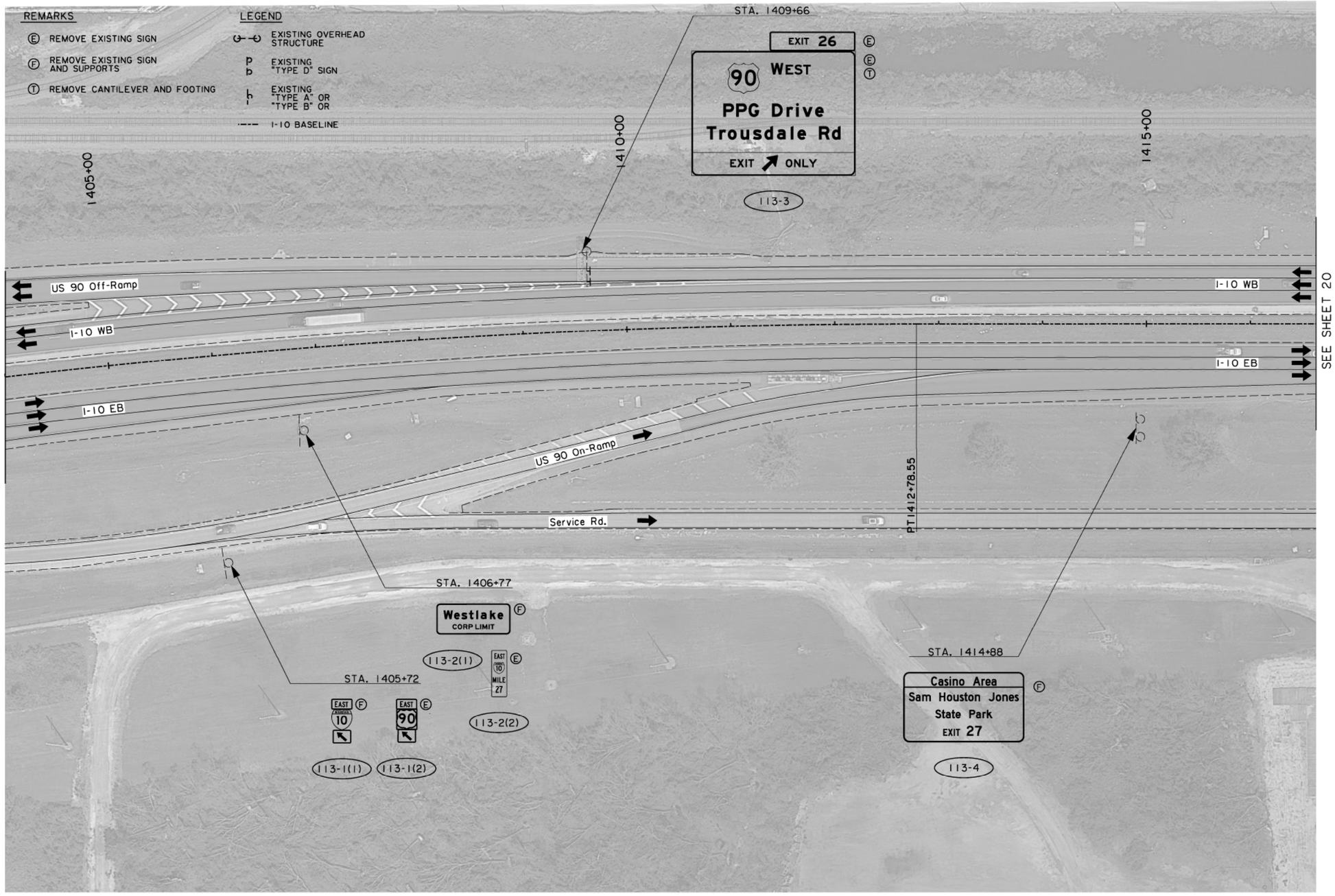

0 50′ 100′

SCALE: 1"=100′

N

SHEET NUMBER	19
PARISH	CALCASIEU
CONTROL SECTION	450-91
STATE PROJECT	H.003931
DESIGN	M. AGUIRRE
CHECK	A. DEITCH
DETAIL	M. AGUIRRE
CHECK	A. DEITCH
REVIEW	
SERIES #	13 OF 31

TECHNICAL PROPOSAL
PRELIMINARY
NOT FOR CONSTRUCTION
ENGINEER:
ART DEITCH
LICENSE #:
41842
DATE:
04/19/2023

NO.	DATE	REVISION OR CHANGE ORDER DESCRIPTION	BY

STATE OF LOUISIANA
JOHN BEL EDWARDS
GOVERNOR

EXISTING SIGN REMOVALS

I-10 CALCASIEU RIVER BRIDGE P3

DOTD
LOUISIANA DEPARTMENT OF TRANSPORTATION & DEVELOPMENT

CBP
CALCASIEU BRIDGE PARTNERS

TECHNICAL PROPOSAL

04/19/23

REMARKS

Ⓔ REMOVE EXISTING SIGN

Ⓕ REMOVE EXISTING SIGN AND SUPPORTS

Ⓣ REMOVE CANTILEVER AND FOOTING

LEGEND

EXISTING OVERHEAD STRUCTURE

EXISTING "TYPE D" SIGN

I-10 BASELINE

1420+00

1425+00

SEE SHEET 19

SEE SHEET 21

I-10 WB

I-10 EB

Service Rd.

Service Rd.

STA. 1419+63

EXIT 27 Ⓔ

Ⓔ

Ⓣ

378

Westlake

EXIT ONLY

EAST Ⓔ

10

114-1(1)

114-1(2)

STA. 1427+76

FOOD - EXIT 27 Ⓕ

114-2

N

0 50′ 100′

SCALE: 1"=100′

SHEET NUMBER	20
PARISH	CALCASIEU
CONTROL SECTION	450-91
STATE PROJECT	H.003931
DESIGN	M. AGUIRRE
CHECK	A. DEITCH
DETAIL	M. AGUIRRE
CHECK	A. DEITCH
REVIEW	
SERIES #	14 OF 31

TECHNICAL PROPOSAL

PRELIMINARY

NOT FOR CONSTRUCTION

ENGINEER:
ART DEITCH

LICENSE #:
41842

DATE:
04/19/2023

NO.	DATE	REVISION OR CHANGE ORDER DESCRIPTION	BY

EXISTING SIGN REMOVALS

I-10 CALCASIEU RIVER BRIDGE P3

DOTD LOUISIANA DEPARTMENT OF TRANSPORTATION & DEVELOPMENT

CBP CALCASIEU BRIDGE PARTNERS

TECHNICAL PROPOSAL

04/19/23

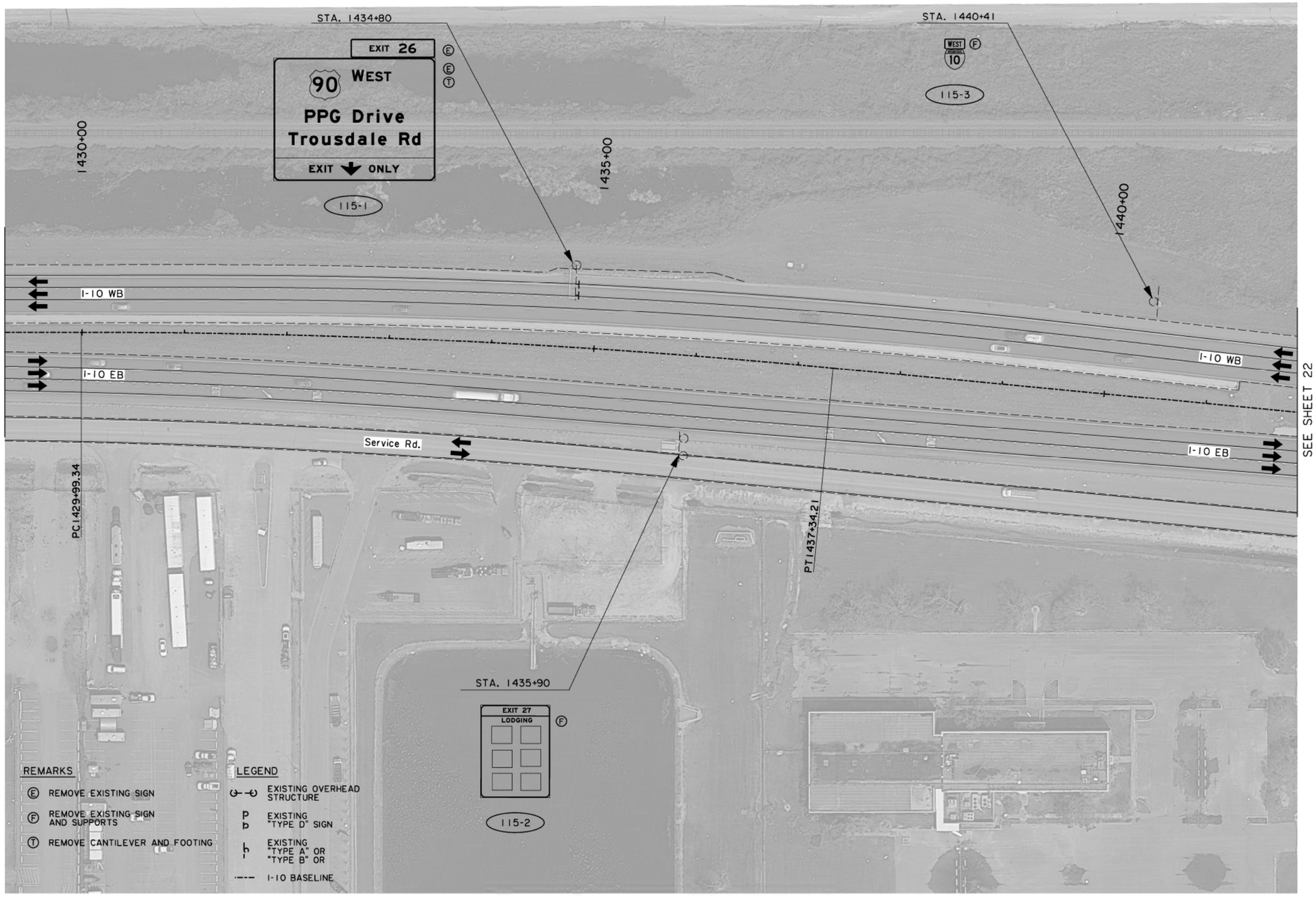

N

0 50' 100'

SCALE: 1"=100'

SHEET NUMBER	21
PARISH	CALCASIEU
CONTROL SECTION	450-91
STATE PROJECT	H.003931

DESIGN	M. AGUIRRE	DETAIL	M. AGUIRRE
CHECK	A. DEITCH	CHECK	A. DEITCH
REVIEW		SERIES #	15 OF 31

TECHNICAL PROPOSAL

PRELIMINARY
NOT FOR CONSTRUCTION
ENGINEER:
ARI DEITCH

LICENSE #:
41842

DATE:
04/19/2023

NO.	DATE	REVISION OR CHANGE ORDER DESCRIPTION	BY

EXISTING SIGN REMOVALS

I-10 CALCASIEU RIVER BRIDGE P3

DOTD LOUISIANA DEPARTMENT OF TRANSPORTATION & DEVELOPMENT

CBP CALCASIEU BRIDGE PARTNERS

TECHNICAL PROPOSAL

04/19/23

REMARKS

(E) REMOVE EXISTING SIGN

(F) REMOVE EXISTING SIGN AND SUPPORTS

(T) REMOVE CANTILEVER AND FOOTING

LEGEND

EXISTING OVERHEAD STRUCTURE

EXISTING "TYPE D" SIGN

EXISTING "TYPE A" OR "TYPE B" OR

I-10 BASELINE

1445+00

1450+00

STA. 1451+64

STA. 1452+21

STA. 1453+04

FOOD

LODGING

116-5

116-6

Beaumont

WEST AHEAD 10

116-8(1)

116-8(2)

PC 1451+61.34

SEE SHEET 21

SEE SHEET 23

I-10 WB

I-10 EB

Sampson St. On-Ramp

Sampson St. Off-Ramp

Service Rd. Off-Ramp

Service Rd.

Service Rd. On-Ramp

STA. 1453+42

GAS

LODGING

116-9

STA. 1443+95

EXIT 27

378

Westlake

EXIT ONLY

116-1

STA. 1449+26

116-2

STA. 1449+26

EXIT 27

116-3

STA. 1450+51

Westlake Casino Area

Lake Charles

EAST AHEAD 10

WEST AHEAD 10

116-4(1)

116-4(2)

116-4(3)

STA. 1452+59

Westlake Casino Area

Sam Houston Jones State Park

116-7

STA. 1453+70

EAST AHEAD 10

116-10

0 50' 100'

SCALE: 1"=100'

N

SHEET NUMBER 22

PARISH: CALCASIEU

CONTROL SECTION: 450-91

STATE PROJECT: H.003931

DESIGN: M. AGUIRRE

CHECK: A. DEITCH

DETAIL: M. AGUIRRE

CHECK: A. DEITCH

REVIEW

SERIES #: 16 OF 31

TECHNICAL PROPOSAL

PRELIMINARY

NOT FOR CONSTRUCTION

ENGINEER: ART DEITCH

LICENSE #: 41842

DATE: 04/19/2023

NO.	DATE	REVISION OR CHANGE ORDER DESCRIPTION	BY

EXISTING SIGN REMOVALS

I-10 CALCASIEU RIVER BRIDGE P3

DOTD LOUISIANA DEPARTMENT OF TRANSPORTATION & DEVELOPMENT

CBP CALCASIEU BRIDGE PARTNERS

TECHNICAL PROPOSAL

04/19/23

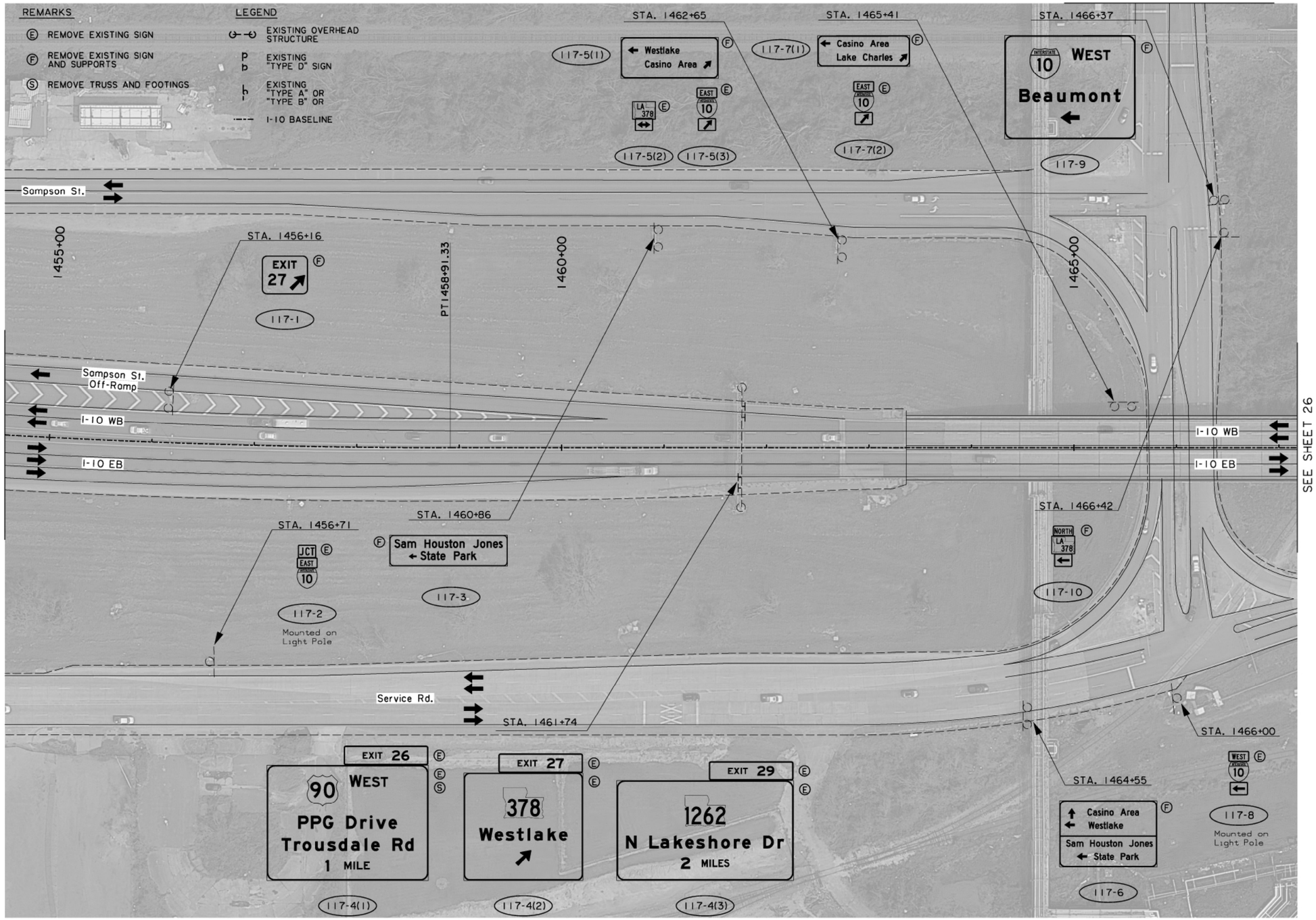

N

SHEET NUMBER 23

PARISH	CONTROL SECTION	STATE PROJECT
CALCASIEU	450-91	H.003931

DESIGN	M. AGUIRRE	DETAIL	M. AGUIRRE
CHECK	A. DEITCH	CHECK	A. DEITCH
REVIEW		SERIES #	17 OF 31

TECHNICAL PROPOSAL
PRELIMINARY
NOT FOR CONSTRUCTION
ENGINEER:
ART DEITCH
LICENSE #:
41842
DATE:
04/19/2023

NO.	DATE	REVISION OR CHANGE ORDER DESCRIPTION	BY

STATE OF LOUISIANA
DEPARTMENT OF TRANSPORTATION AND DEVELOPMENT

EXISTING SIGN REMOVALS

I-10 CALCASIEU RIVER BRIDGE P3

DOTD
LOUISIANA DEPARTMENT OF TRANSPORTATION & DEVELOPMENT

CBP
CALCASIEU BRIDGE PARTNERS

TECHNICAL PROPOSAL

04/19/23

SEE SHEET 25

REMARKS

Ⓔ REMOVE EXISTING SIGN

Ⓕ REMOVE EXISTING SIGN AND SUPPORTS

LEGEND

P / b EXISTING "TYPE D" SIGN

h EXISTING "TYPE A" OR "TYPE B" OR

STA. 1465+60

JCT 10 Ⓕ

118-2

Sampson St.

STA. 1466+32

Sulphur Ave NEXT SIGNAL Ⓕ

118-3

STA. 1465+36

EAST 10 Ⓕ

WEST 10 Ⓔ

118-1(1) 118-1(2)

SEE SHEET 23

0 50' 100'

SCALE: 1"=100'

N

SHEET NUMBER	24
PARISH	CALCASIEU
CONTROL SECTION	450-91
STATE PROJECT	H.003931
DESIGN	M. AGUIRRE
CHECK	A. DEITCH
DETAIL	M. AGUIRRE
CHECK	A. DEITCH
REVIEW	
SERIES #	18 OF 31

TECHNICAL PROPOSAL

PRELIMINARY

NOT FOR CONSTRUCTION

ENGINEER:
ARI DEITCH

LICENSE #:
41842

DATE:
04/19/2023

NO.	DATE	REVISION OR CHANGE ORDER DESCRIPTION	BY

EXISTING SIGN REMOVALS

I-10 CALCASIEU RIVER BRIDGE P3

DOTD LOUISIANA DEPARTMENT OF TRANSPORTATION & DEVELOPMENT

CBP CALCASIEU BRIDGE PARTNERS

TECHNICAL PROPOSAL

04/19/23

REMARKS

Ⓔ REMOVE EXISTING SIGN

Ⓕ REMOVE EXISTING SIGN AND SUPPORTS

LEGEND

P EXISTING "TYPE D" SIGN

I EXISTING "TYPE A" OR "TYPE B" OR

Sampson St.

Sulphur Ave.

Sulphur Ave.

STA. 1465+54

Ⓕ

I-10

Beaumont

RIGHT LANE ONLY

119-1

Sampson St.

SEE SHEET 24

0 50' 100'

SCALE: 1"=100'

N

SHEET NUMBER	25
PARISH	CALCASIEU
CONTROL SECTION	450-91
STATE PROJECT	H.003931

DESIGN	M. AGUIRRE
CHECK	A. DEITCH
DETAIL	M. AGUIRRE
CHECK	A. DEITCH
REVIEW	
SERIES #	19 OF 31

TECHNICAL PROPOSAL

PRELIMINARY

NOT FOR CONSTRUCTION

ENGINEER:
ART DEITCH

LICENSE #:
41842

DATE:
04/19/2023

NO.	DATE	REVISION OR CHANGE ORDER DESCRIPTION	BY

EXISTING SIGN REMOVALS

I-10 CALCASIEU RIVER BRIDGE P3

DOTD LOUISIANA DEPARTMENT OF TRANSPORTATION & DEVELOPMENT

CBP CALCASIEU BRIDGE PARTNERS

TECHNICAL PROPOSAL

04/19/23

REMARKS

Ⓔ REMOVE EXISTING SIGN

Ⓕ REMOVE EXISTING SIGN AND SUPPORTS

LEGEND

EXISTING "TYPE D" SIGN

EXISTING "TYPE A" OR "TYPE B" OR

I-10 BASELINE

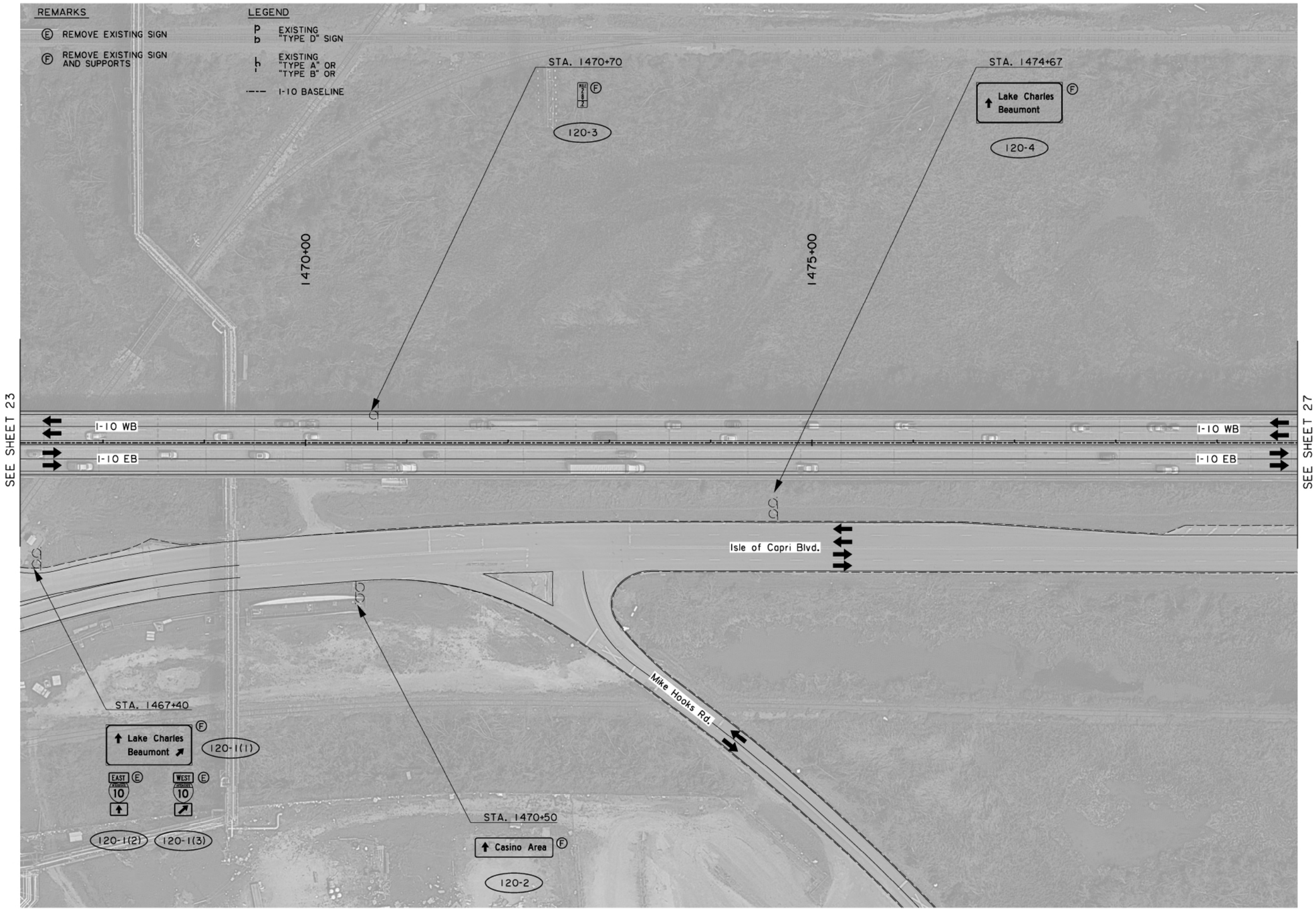

0 50′ 100′

SCALE: 1"=100′

N

SHEET NUMBER 26

PARISH	CONTROL SECTION	STATE PROJECT
CALCASIEU	450-91	H.003931

DESIGN	M. AGUIRRE	REVIEW	20 OF 31
CHECK	A. DEITCH	SERIES #	
DETAIL	M. AGUIRRE		
CHECK	A. DEITCH		

TECHNICAL PROPOSAL

PRELIMINARY

NOT FOR CONSTRUCTION

ENGINEER: ART DEITCH

LICENSE #: 41842

DATE: 04/19/2023

NO.	DATE	REVISION OR CHANGE ORDER DESCRIPTION	BY

EXISTING SIGN REMOVALS

I-10 CALCASIEU RIVER BRIDGE P3

LOUISIANA DEPARTMENT OF TRANSPORTATION & DEVELOPMENT

CALCASIEU BRIDGE PARTNERS

TECHNICAL PROPOSAL

04/19/23

REMARKS

Ⓕ REMOVE EXISTING SIGN AND SUPPORTS

LEGEND

EXISTING "TYPE A" OR "TYPE B" OR

I-10 BASELINE

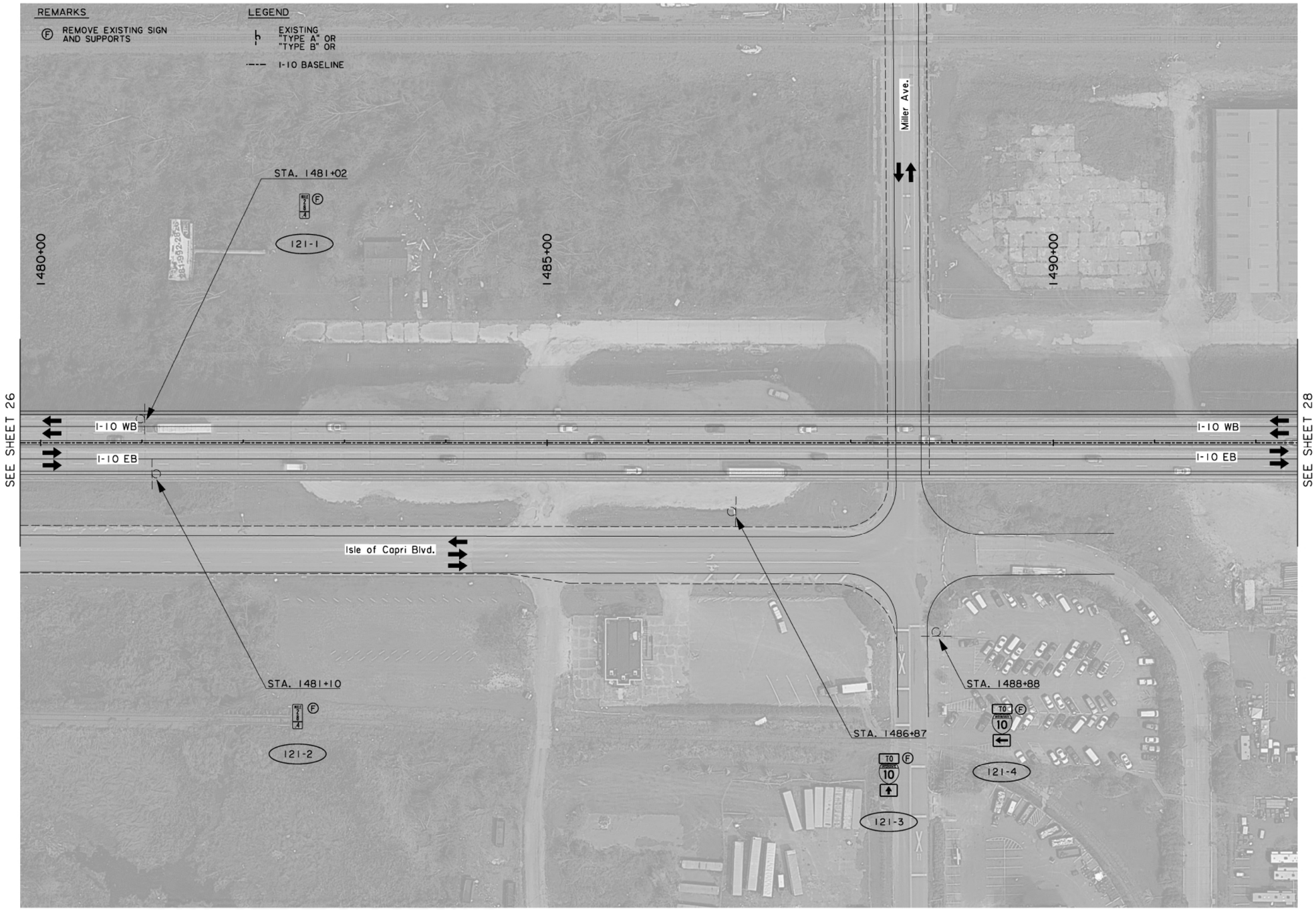

0 50' 100'

SCALE: 1"=100'

N

SHEET NUMBER	27

PARISH	CONTROL SECTION	STATE PROJECT
CALCASIEU	450-91	H.003931

DESIGN	M. AGUIRRE	DETAIL	M. AGUIRRE	REVIEW	21 OF 31
CHECK	A. DEITCH	CHECK	A. DEITCH	SERIES #	

TECHNICAL PROPOSAL

PRELIMINARY

NOT FOR CONSTRUCTION

ENGINEER:
ARI DEITCH

LICENSE #:
41842

DATE:
04/19/2023

NO.	DATE	REVISION OR CHANGE ORDER DESCRIPTION	BY

EXISTING SIGN REMOVALS

I-10 CALCASIEU RIVER BRIDGE P3

DOTD LOUISIANA DEPARTMENT OF TRANSPORTATION & DEVELOPMENT

CBP CALCASIEU BRIDGE PARTNERS

TECHNICAL PROPOSAL

04/19/23

REMARKS

Ⓕ REMOVE EXISTING SIGN AND SUPPORTS

LEGEND

EXISTING "TYPE A" OR "TYPE B"

I-10 BASELINE



0 50' 100'

SCALE: 1"=100'

N

SHEET NUMBER	28
PARISH	CALCASIEU
CONTROL SECTION	450-91
STATE PROJECT	H.003931

DESIGN	M. AGUIRRE	DETAIL	M. AGUIRRE
CHECK	A. DEITCH	CHECK	A. DEITCH
REVIEW		SERIES #	22 OF 31

TECHNICAL PROPOSAL

PRELIMINARY

NOT FOR CONSTRUCTION

ENGINEER: ARI DEITCH

LICENSE #: 41842

DATE: 04/19/2023

NO.	DATE	REVISION OR CHANGE ORDER DESCRIPTION	BY

EXISTING SIGN REMOVALS

I-10 CALCASIEU RIVER BRIDGE P3

DOTD LOUISIANA DEPARTMENT OF TRANSPORTATION & DEVELOPMENT

CBP CALCASIEU BRIDGE PARTNERS

TECHNICAL PROPOSAL

04/19/23

LEGEND

I-10 BASELINE



N

0 50' 100'

SCALE: 1"=100'

SHEET NUMBER	29

PARISH	CONTROL SECTION	STATE PROJECT
CALCASIEU	450-91	H.003931

DESIGN	M. AGUIRRE	DETAIL	M. AGUIRRE	REVIEW	23 OF 31
CHECK	A. DEITCH	CHECK	A. DEITCH	SERIES #	

TECHNICAL PROPOSAL

PRELIMINARY

NOT FOR CONSTRUCTION

ENGINEER:
ARI DEITCH

LICENSE #:
41842

DATE:
04/19/2023

NO.	DATE	REVISION OR CHANGE ORDER DESCRIPTION	BY

EXISTING SIGN REMOVALS

I-10 CALCASIEU RIVER BRIDGE P3

LOUISIANA DEPARTMENT OF TRANSPORTATION & DEVELOPMENT

CBP
CALCASIEU BRIDGE PARTNERS

TECHNICAL PROPOSAL

04/19/23

REMARKS

Ⓔ REMOVE EXISTING SIGN

Ⓕ REMOVE EXISTING SIGN AND SUPPORTS

Ⓣ REMOVE CANTILEVER AND FOOTING

LEGEND

EXISTING OVERHEAD STRUCTURE

EXISTING "TYPE A" OR "TYPE B" OR

I-10 BASELINE

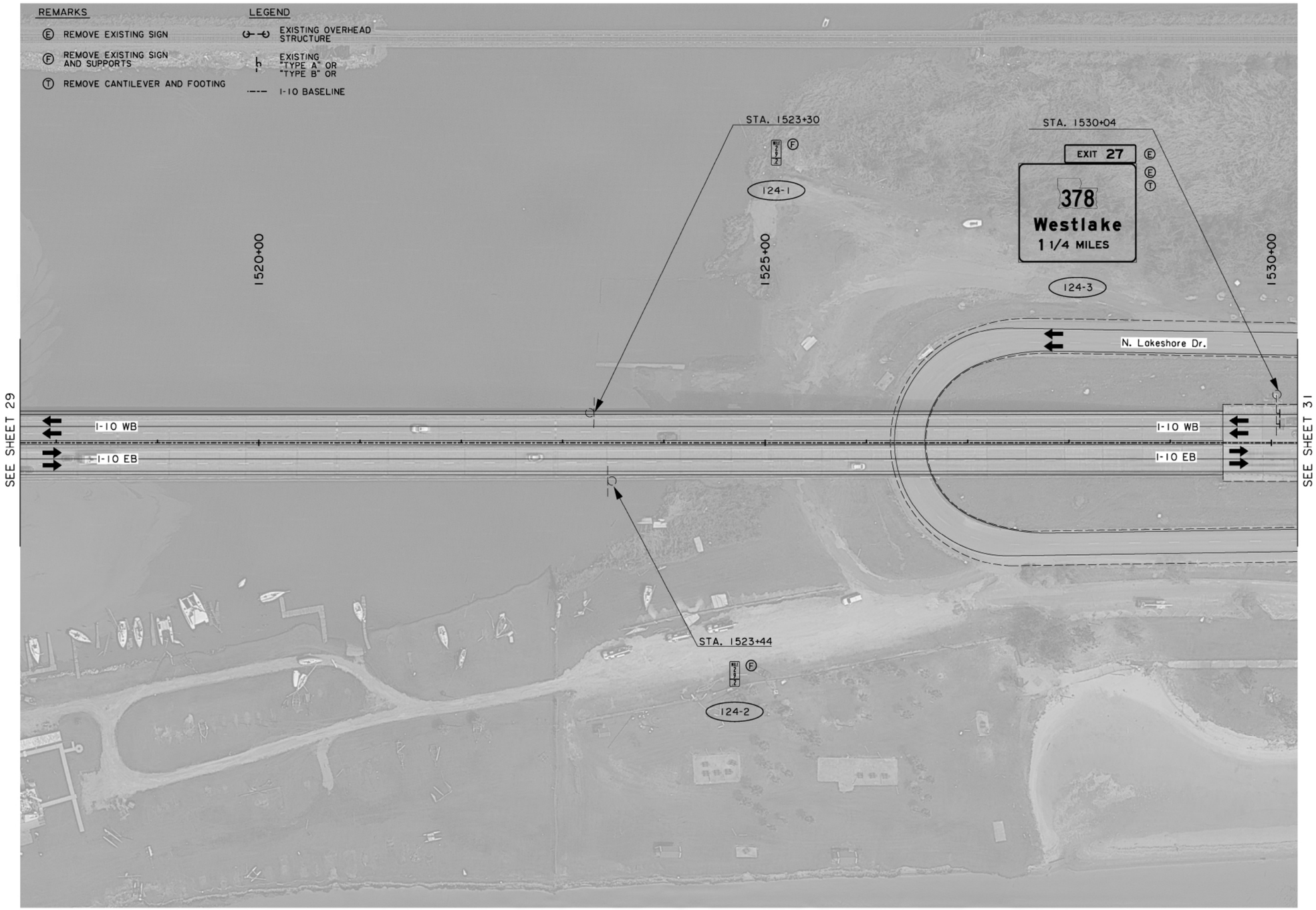

0 50' 100'

SCALE: 1"=100'

N

SHEET NUMBER 30

PARISH CALCASIEU

CONTROL SECTION 450-91

STATE PROJECT H.003931

DESIGN M. AGUIRRE
CHECK A. DEITCH
DETAIL M. AGUIRRE
CHECK A. DEITCH
REVIEW
SERIES # 24 OF 31

TECHNICAL PROPOSAL
PRELIMINARY
NOT FOR CONSTRUCTION
ENGINEER:
ART DEITCH
LICENSE #:
41842
DATE:
04/19/2023

NO.	DATE	REVISION OR CHANGE ORDER DESCRIPTION	BY

EXISTING SIGN REMOVALS

I-10 CALCASIEU RIVER BRIDGE P3

DOTD LOUISIANA DEPARTMENT OF TRANSPORTATION & DEVELOPMENT

CBP CALCASIEU BRIDGE PARTNERS

TECHNICAL PROPOSAL

04/19/23

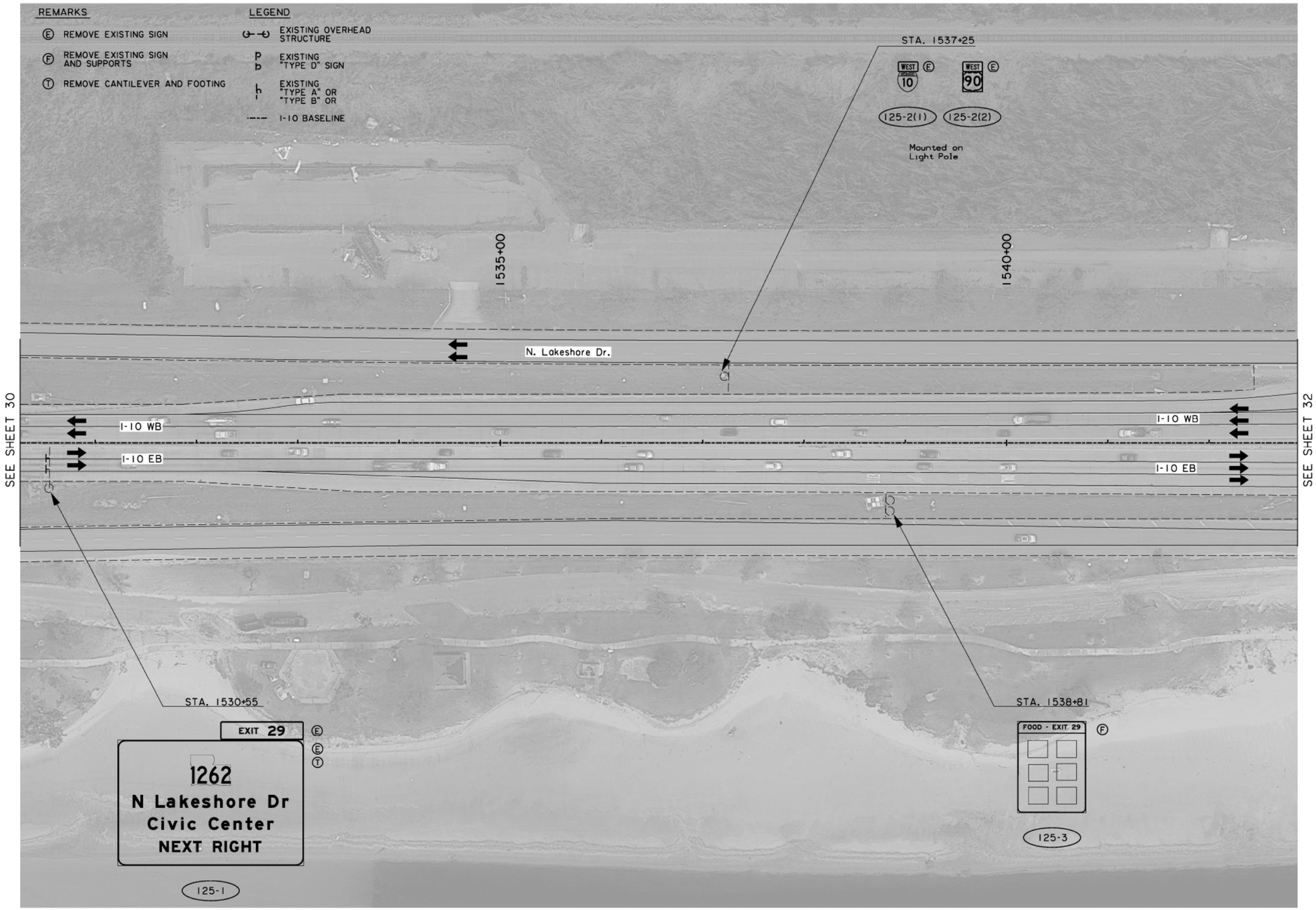

N

0 50′ 100′

SCALE: 1"=100′

SHEET NUMBER	31
PARISH	CALCASIEU
CONTROL SECTION	450-91
STATE PROJECT	H.003931

DESIGN	M. AGUIRRE
CHECK	A. DEITCH
DETAIL	M. AGUIRRE
CHECK	A. DEITCH
REVIEW	
SERIES #	25 OF 31

TECHNICAL PROPOSAL

PRELIMINARY

NOT FOR CONSTRUCTION

ENGINEER:
ART DEITCH

LICENSE #:
41842

DATE:
04/19/2023

NO.	DATE	REVISION OR CHANGE ORDER DESCRIPTION	BY

STATE OF LOUISIANA

EXISTING SIGN REMOVALS

I-10 CALCASIEU RIVER BRIDGE P3

DOTD LOUISIANA DEPARTMENT OF TRANSPORTATION & DEVELOPMENT

CBP CALCASIEU BRIDGE PARTNERS

TECHNICAL PROPOSAL

04/19/23

REMARKS

Ⓔ REMOVE EXISTING SIGN

Ⓕ REMOVE EXISTING SIGN AND SUPPORTS

Ⓢ REMOVE TRUSS AND FOOTINGS

LEGEND

EXISTING OVERHEAD STRUCTURE

EXISTING "TYPE D" SIGN

EXISTING "TYPE A" OR "TYPE B" OR

I-10 BASELINE

STA. 1544+00

126-1(1) 126-1(2)

1545+00

STA. 1547+64

Lakeshore Dr
Beaumont

126-3(1)

WEST 10 Ⓔ 126-3(2)

WEST 90 Ⓔ 126-3(3)

TO EAST 10 Ⓔ 126-3(4)

SOUTH LA 1262 Ⓔ 126-3(5)

1550+00

STA. 1550+79

EXIT 29 Ⓕ

126-4

1555+00

N. Lakeshore Dr. On-Ramp

I-10 WB

I-10 EB

N. Lakeshore Dr.

N. Lakeshore Dr.

I-10 WB

I-10 EB

N. Lakeshore Dr. Off-Ramp

SEE SHEET 31

SEE SHEET 33

STA. 1547+20

STA. 1554+68

126-5(1) 126-5(2)

EXIT 29 Ⓔ Ⓔ

1262
N Lakeshore Dr
Civic Center

126-2(3)

EXIT 31A Ⓔ Ⓔ

90 BUSINESS
Enterprise Blvd
1 ½ MILES

126-2(2)

EAST Ⓔ Ⓢ
10 90
Lafayette

126-2(1)

0 50' 100'

SCALE: 1"=100'

N

SHEET NUMBER 32

PARISH	CONTROL SECTION	STATE PROJECT
CALCASIEU	450-91	H.003931

DESIGN	CHECK	DETAIL	CHECK	REVIEW	SERIES #
M. AGUIRRE	A. DEITCH	M. AGUIRRE	A. DEITCH		26 OF 31

TECHNICAL PROPOSAL

PRELIMINARY
NOT FOR CONSTRUCTION

ENGINEER:
ARI DEITCH

LICENSE #:
41842

DATE:
04/19/2023

NO.	DATE	REVISION OR CHANGE ORDER DESCRIPTION	BY

STATE OF LOUISIANA

EXISTING SIGN REMOVALS

I-10 CALCASIEU RIVER BRIDGE P3

DOTD LOUISIANA DEPARTMENT OF TRANSPORTATION & DEVELOPMENT

CBP CALCASIEU BRIDGE PARTNERS

TECHNICAL PROPOSAL

04/19/23

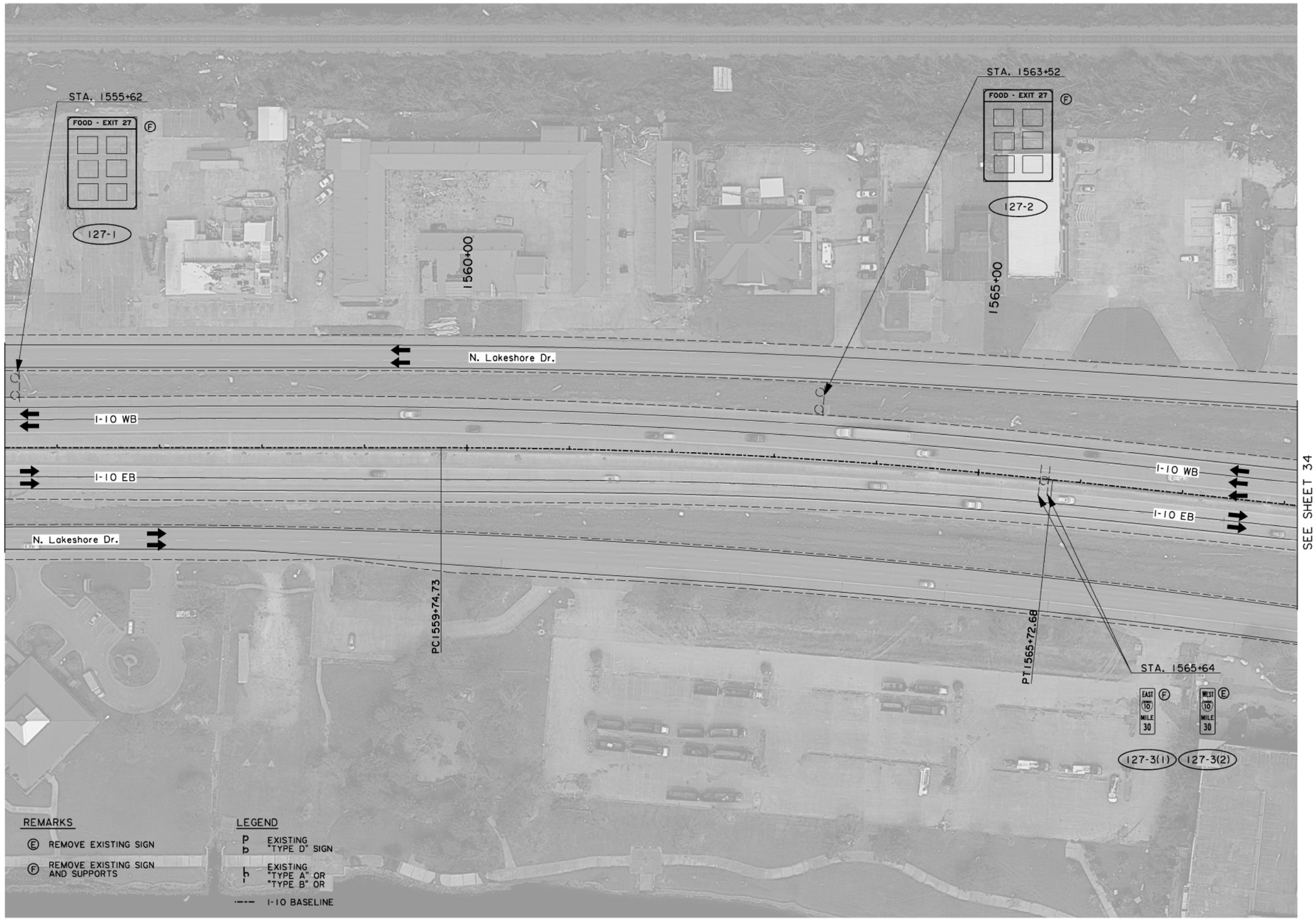

N

0 50' 100'

SCALE: 1"=100'

SHEET NUMBER	33
PARISH	CALCASIEU
CONTROL SECTION	450-91
STATE PROJECT	H.003931
DESIGN	M. AGUIRRE
CHECK	A. DEITCH
DETAIL	M. AGUIRRE
CHECK	A. DEITCH
REVIEW	
SERIES #	27 OF 31

TECHNICAL PROPOSAL
PRELIMINARY
NOT FOR CONSTRUCTION
ENGINEER:
ART DEITCH
LICENSE #:
41842
DATE:
04/19/2023

NO.	DATE	REVISION OR CHANGE ORDER DESCRIPTION	BY

EXISTING SIGN REMOVALS

I-10 CALCASIEU RIVER BRIDGE P3

DOTD LOUISIANA DEPARTMENT OF TRANSPORTATION & DEVELOPMENT

CBP CALCASIEU BRIDGE PARTNERS

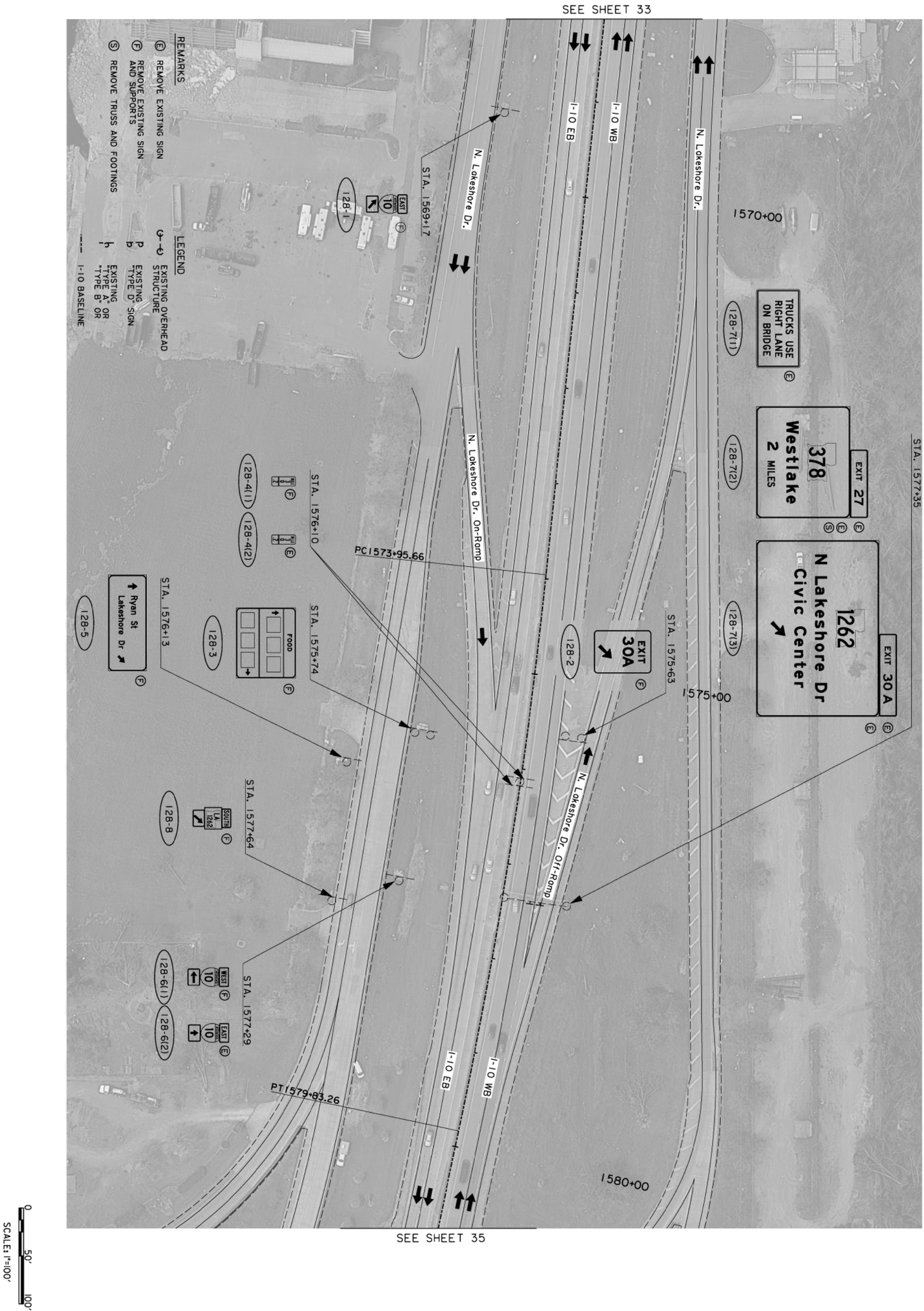

DOTD LOUISIANA DEPARTMENT OF TRANSPORTATION & DEVELOPMENT CBP CALCASIEU BRIDGE PARTNERS	EXISTING SIGN REMOVALS	NO.	DATE	REVISION OR CHANGE ORDER DESCRIPTION	BY	TECHNICAL PROPOSAL PRELIMINARY NOT FOR CONSTRUCTION ENGINEER: ARI DEITCH LICENSE #: 41842 DATE: 04/19/2023	DESIGN M. AGUIRRE CHECK A. DEITCH DETAIL M. AGUIRRE CHECK A. DEITCH REVIEW SERIES # 28 OF 31	PARISH CALCASIEU CONTROL SECTION 450-91 STATE PROJECT H.003931
	I-10 CALCASIEU RIVER BRIDGE P3							SHEET NUMBER 34

TECHNICAL PROPOSAL

04/19/23

REMARKS

Ⓔ REMOVE EXISTING SIGN

Ⓕ REMOVE EXISTING SIGN AND SUPPORTS

LEGEND

EXISTING OVERHEAD STRUCTURE

EXISTING "TYPE D" SIGN

EXISTING "TYPE A" OR "TYPE B" OR

I-10 BASELINE

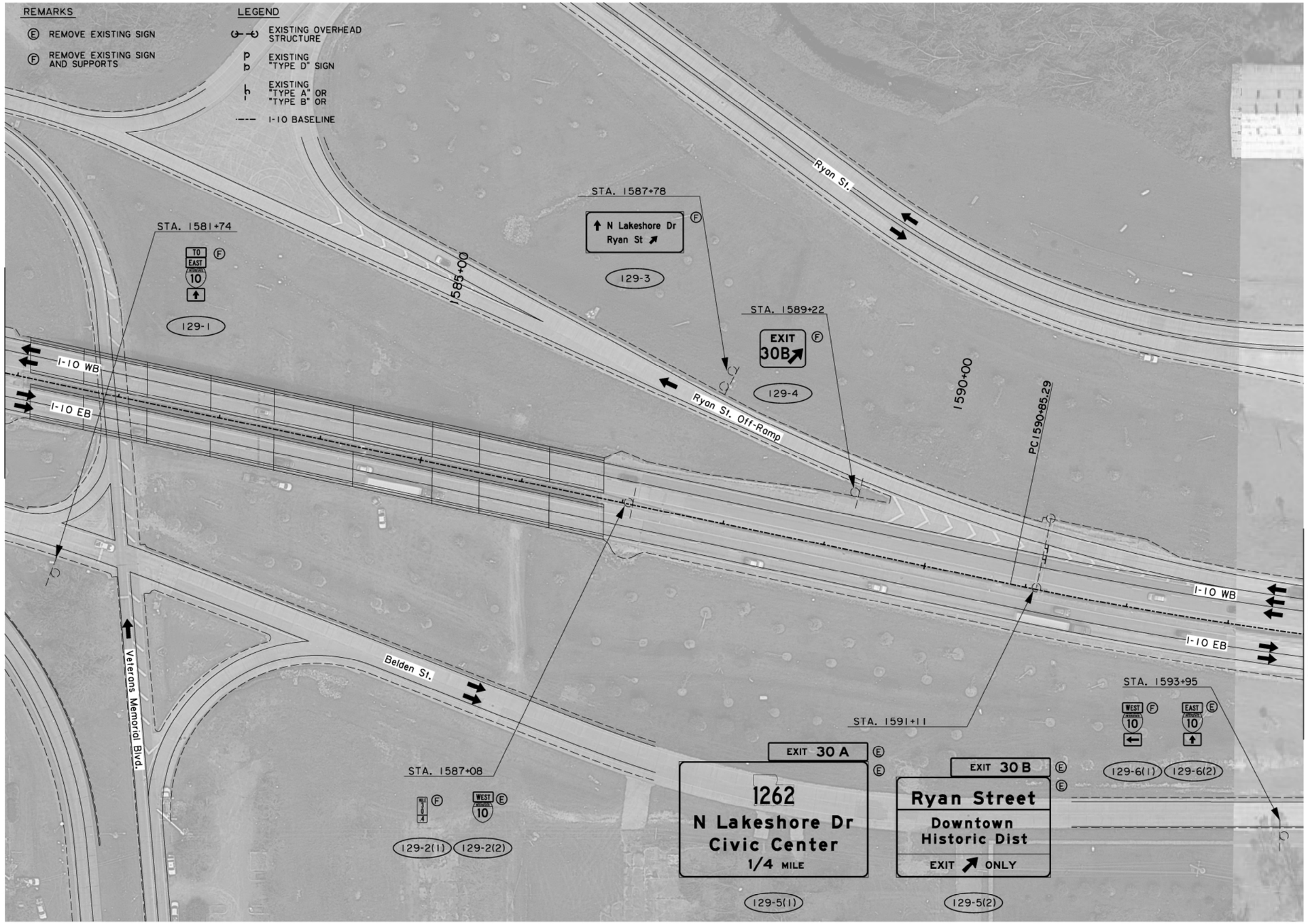

0 50′ 100′

SCALE: 1"=100′

N

SHEET NUMBER	35

PARISH	CONTROL SECTION	STATE PROJECT
CALCASIEU	450-91	H.003931

	DESIGN	CHECK	DETAIL	CHECK	REVIEW	SERIES #
	M. AGUIRRE	A. DEITCH	M. AGUIRRE	A. DEITCH		29 OF 31

TECHNICAL PROPOSAL

PRELIMINARY

NOT FOR CONSTRUCTION

ENGINEER: ART DEITCH

LICENSE #: 41842

DATE: 04/19/2023

NO.	DATE	REVISION OR CHANGE ORDER DESCRIPTION	BY

EXISTING SIGN REMOVALS

I-10 CALCASIEU RIVER BRIDGE P3

DOTD LOUISIANA DEPARTMENT OF TRANSPORTATION & DEVELOPMENT

CBP CALCASIEU BRIDGE PARTNERS

TECHNICAL PROPOSAL

04/19/23

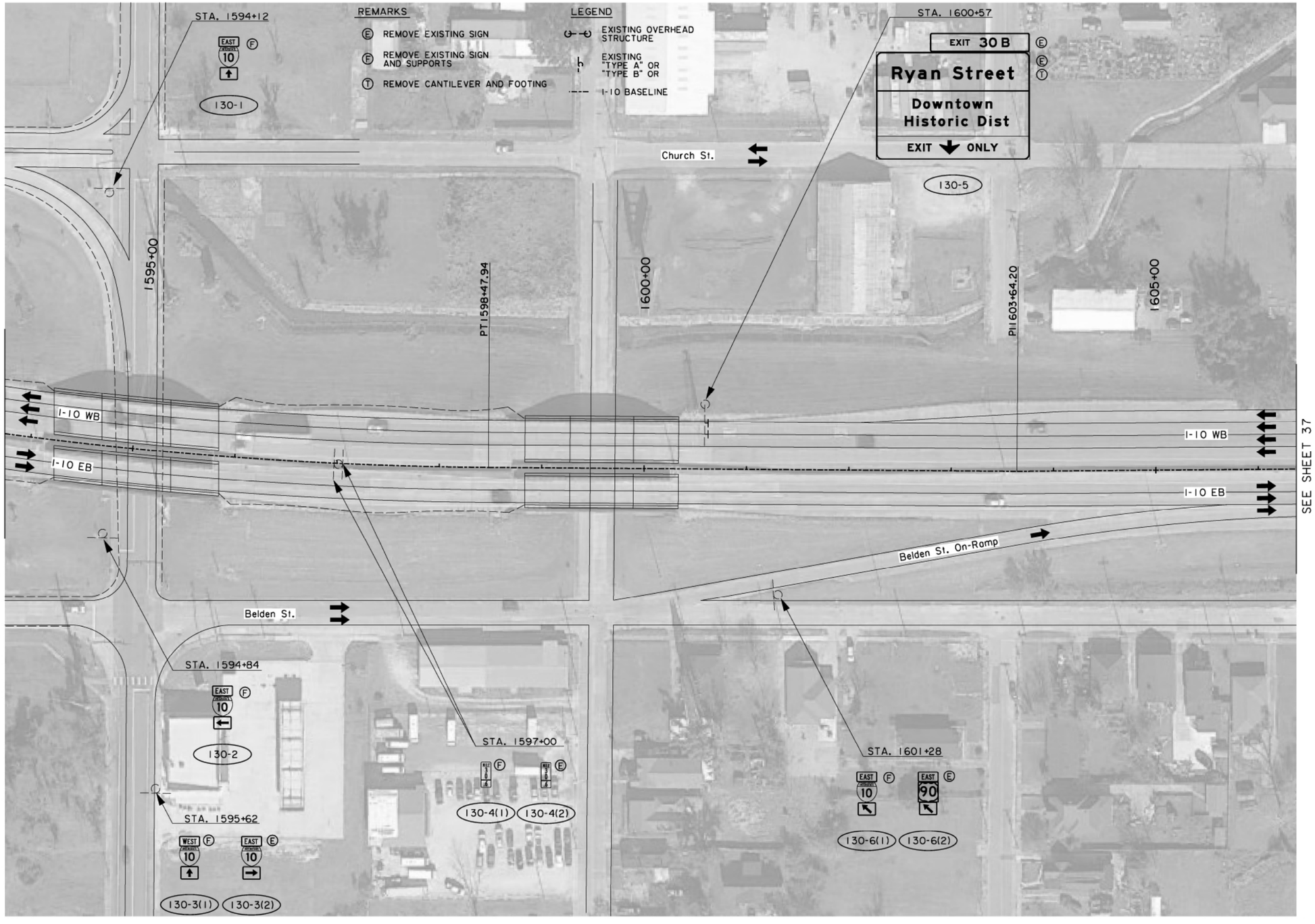

N

0 50′ 100′

SCALE: 1"=100′

SHEET NUMBER	36

PARISH	CONTROL SECTION	STATE PROJECT
CALCASIEU	450-91	H.003931

DESIGN	M. AGUIRRE	DETAIL	M. AGUIRRE
CHECK	A. DEITCH	CHECK	A. DEITCH
REVIEW		SERIES #	30 OF 31

TECHNICAL PROPOSAL

PRELIMINARY
NOT FOR CONSTRUCTION
ENGINEER:
ART DEITCH
LICENSE #:
41842
DATE:
04/19/2023

NO.	DATE	REVISION OR CHANGE ORDER DESCRIPTION	BY

STATE OF LOUISIANA — DEPARTMENT OF TRANSPORTATION AND DEVELOPMENT — CONFIDENCE

EXISTING SIGN REMOVALS

I-10 CALCASIEU RIVER BRIDGE P3

DOTD — LOUISIANA DEPARTMENT OF TRANSPORTATION & DEVELOPMENT

CBP — CALCASIEU BRIDGE PARTNERS

TECHNICAL PROPOSAL

04/19/23

REMARKS

(E) REMOVE EXISTING SIGN

(F) REMOVE EXISTING SIGN AND SUPPORTS

(T) REMOVE CANTILEVER AND FOOTING

LEGEND

EXISTING OVERHEAD STRUCTURE

EXISTING "TYPE D" SIGN

EXISTING "TYPE A" OR "TYPE B" OR

I-10 BASELINE

STA. 1607+45

131-1(1) 131-1(2)

1610+00

Church St.

Service Rd. On-Ramp

SEE SHEET 36

I-10 WB

I-10 EB

STA. 1611+65

WEST I-10 (F) WEST 90 (E)

131-2(1) 131-2(2)

STA. 1612+93

FOOD - EXIT 30B (F)

131-3

1615+00

STA. 1615+94

EXIT 30 B (E) (E) (T)

Ryan Street

Downtown Historic Dist

EXIT ONLY

131-5

STA. 1618+34

WEST I-10 (F)

131-6

POE 1618+88.00

STA. 1648+26

EXIT 30 B (E)

Ryan Street (E)

Downtown Historic Dist 1 MILE

EXIT 31 A (E)

90 BUSINESS (E)

Enterprise Blvd

EXIT ONLY

(E) WEST I-10 90 Beaumont

131-8(1) 131-8(2) 131-8(3)

Service Rd.

I-10 WB

Belden St.

STA. 1615+16

EXIT 31 A (E) (E) (T)

90 BUSINESS

Enterprise Blvd

NEXT RIGHT

131-4

STA. 1618+34

WEST I-10 MILE 31 (F)

131-7

0 50' 100'

SCALE: 1"=100'

N

SHEET NUMBER	37

PARISH	CONTROL SECTION	STATE PROJECT
CALCASIEU	450-91	H.003931

	DESIGN	CHECK	DETAIL	CHECK	REVIEW	SERIES #
	M. AGUIRRE	A. DEITCH	M. AGUIRRE	A. DEITCH		31 OF 31

TECHNICAL PROPOSAL

PRELIMINARY

NOT FOR CONSTRUCTION

ENGINEER:
ART DEITCH

LICENSE #:
41842

DATE:
04/19/2023

NO.	DATE	REVISION OR CHANGE ORDER DESCRIPTION	BY

STATE OF LOUISIANA

EXISTING SIGN REMOVALS

I-10 CALCASIEU RIVER BRIDGE P3

DOTD LOUISIANA DEPARTMENT OF TRANSPORTATION & DEVELOPMENT

CBP CALCASIEU BRIDGE PARTNERS

TECHNICAL PROPOSAL

04/19/23

REMARKS

Ⓑ REQUIRED EXIT NUMBER PANEL

Ⓒ REQUIRED NEW SIGN AND MOUNT AS INDICATED

Ⓓ REQUIRED OVERHEAD CANTILEVER AND FOOTING

LEGEND

EXISTING OVERHEAD STRUCTURE

PROPOSED OVERHEAD STRUCTURE

PROPOSED SIGN PANEL



SEE SHEET 39

N

0 50′ 100′

SCALE: 1"=100′

SHEET NUMBER 38

PARISH	CONTROL SECTION	STATE PROJECT
CALCASIEU	450-91	H.003931

DESIGN	M. AGUIRRE	DETAIL	M. AGUIRRE	REVIEW	SERIES # 1 OF 33
CHECK	A. DEITCH	CHECK	A. DEITCH		

TECHNICAL PROPOSAL

PRELIMINARY

NOT FOR CONSTRUCTION

ENGINEER: ART DEITCH

LICENSE #: 41842

DATE: 04/19/2023

NO.	DATE	REVISION OR CHANGE ORDER DESCRIPTION	BY

PROPOSED SIGN LAYOUT

I-10 CALCASIEU RIVER BRIDGE P3

DOTD LOUISIANA DEPARTMENT OF TRANSPORTATION & DEVELOPMENT

CBP CALCASIEU BRIDGE PARTNERS

TECHNICAL PROPOSAL

04/19/23

REMARKS

Ⓐ REQUIRED NEW SIGN AND BREAKAWAY SUPPORT

Ⓑ REQUIRED EXIT NUMBER PANEL

Ⓒ REQUIRED NEW SIGN AND MOUNT AS INDICATED

LEGEND

EXISTING OVERHEAD STRUCTURE

PROPOSED SIGN PANEL

PROPOSED "TYPE D" SIGN

I-10 BASELINE

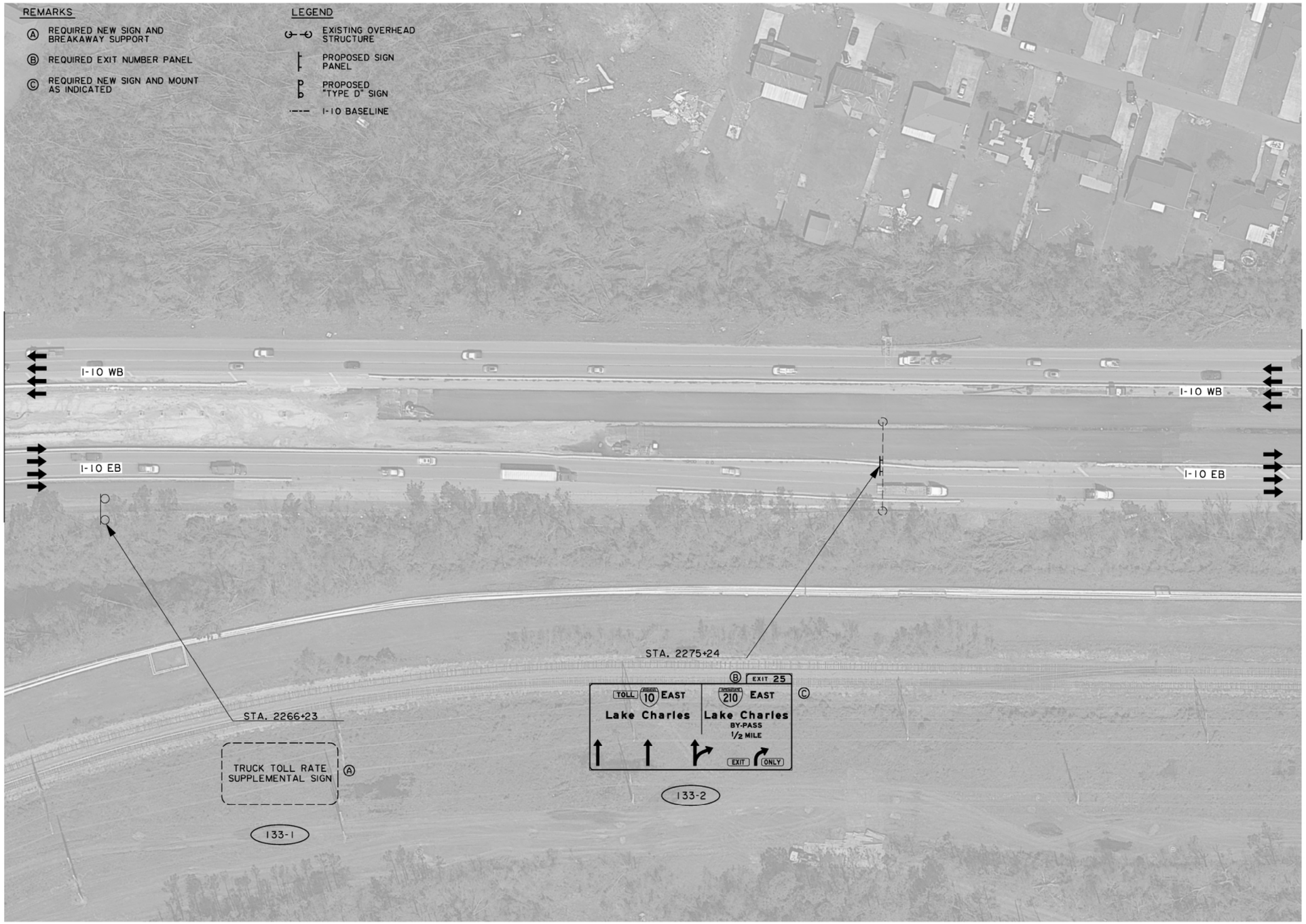

N

0 50′ 100′

SCALE: 1"=100′

SHEET NUMBER	39
PARISH	CALCASIEU
CONTROL SECTION	450-91
STATE PROJECT	H.003931
DESIGN	M. AGUIRRE
CHECK	A. DEITCH
DETAIL	M. AGUIRRE
CHECK	A. DEITCH
REVIEW	
SERIES #	2 OF 33

TECHNICAL PROPOSAL

PRELIMINARY
NOT FOR CONSTRUCTION
ENGINEER:
ARI DEITCH

LICENSE #:
41842

DATE:
04/19/2023

NO.	DATE	REVISION OR CHANGE ORDER DESCRIPTION	BY

PROPOSED SIGN LAYOUT

I-10 CALCASIEU RIVER BRIDGE P3

DOTD LOUISIANA DEPARTMENT OF TRANSPORTATION & DEVELOPMENT

CBP CALCASIEU BRIDGE PARTNERS

TECHNICAL PROPOSAL

04/19/23



N

0 50' 100'

SCALE: 1"=100'

SHEET NUMBER	40
PARISH	CALCASIEU
CONTROL SECTION	450-91
STATE PROJECT	H.003931
DESIGN	M. AGUIRRE
CHECK	A. DEITCH
DETAIL	M. AGUIRRE
CHECK	A. DEITCH
REVIEW	
SERIES #	3 OF 33

TECHNICAL PROPOSAL

PRELIMINARY
NOT FOR CONSTRUCTION

ENGINEER:
ARI DEITCH

LICENSE #:
41842

DATE:
04/19/2023

NO.	DATE	REVISION OR CHANGE ORDER DESCRIPTION	BY

PROPOSED SIGN LAYOUT

I-10 CALCASIEU RIVER BRIDGE P3

DOTD LOUISIANA DEPARTMENT OF TRANSPORTATION & DEVELOPMENT

CBP CALCASIEU BRIDGE PARTNERS

TECHNICAL PROPOSAL

04/19/23

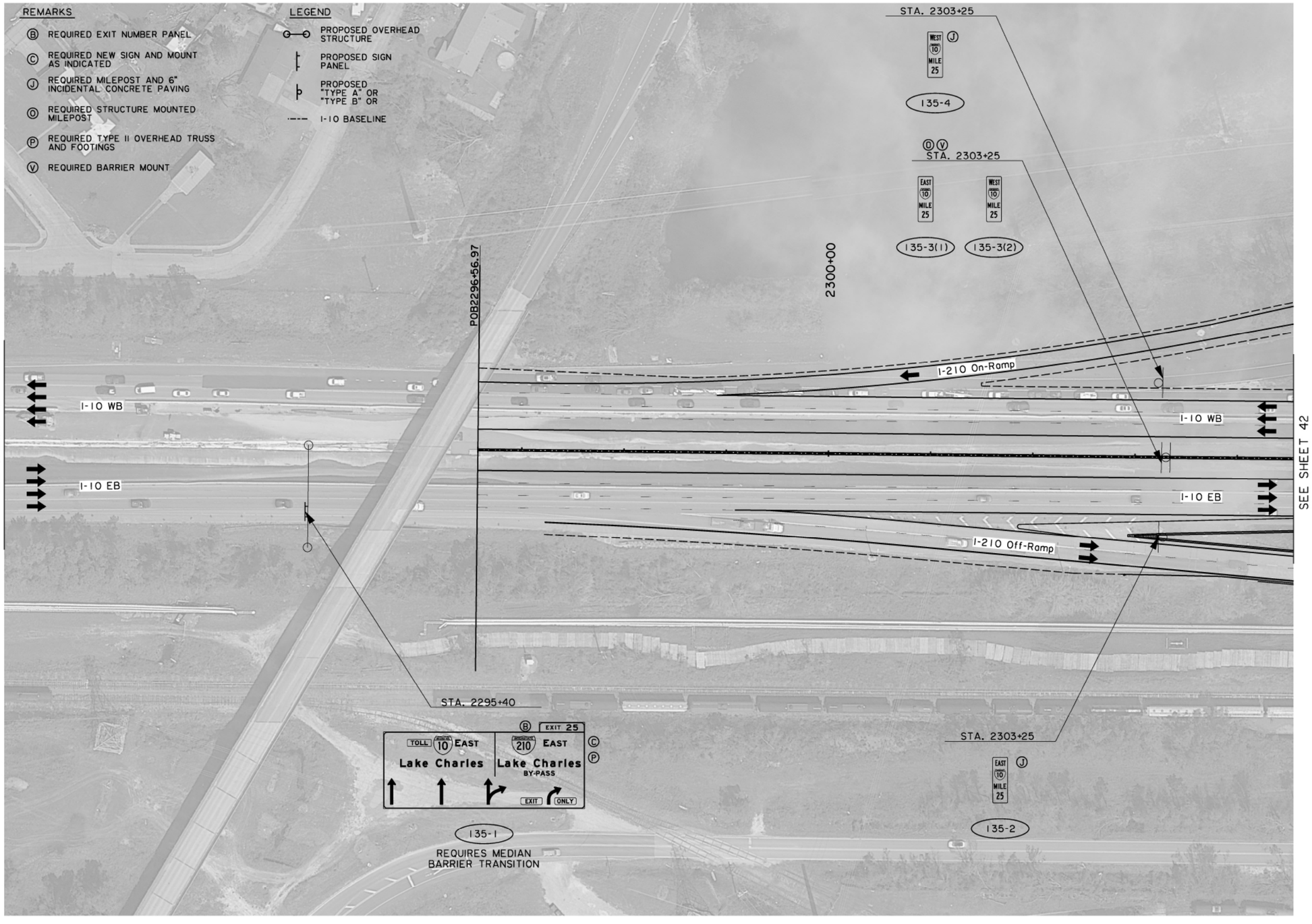

0 50′ 100′

SCALE: 1"=100′

N

SHEET NUMBER	41

PARISH	CONTROL SECTION	STATE PROJECT
CALCASIEU	450-91	H.003931

DESIGN	M. AGUIRRE	DETAIL	M. AGUIRRE	REVIEW	4 OF 33
CHECK	A. DEITCH	CHECK	A. DEITCH	SERIES #	

TECHNICAL PROPOSAL
PRELIMINARY
NOT FOR CONSTRUCTION
ENGINEER:
ART DEITCH
LICENSE #:
41842
DATE:
04/19/2023

NO.	DATE	REVISION OR CHANGE ORDER DESCRIPTION	BY

PROPOSED SIGN LAYOUT

I-10 CALCASIEU RIVER BRIDGE P3

DOTD LOUISIANA DEPARTMENT OF TRANSPORTATION & DEVELOPMENT

CBP CALCASIEU BRIDGE PARTNERS

TECHNICAL PROPOSAL

04/19/23

REMARKS

Ⓑ REQUIRED EXIT NUMBER PANEL

Ⓒ REQUIRED NEW SIGN AND MOUNT AS INDICATED

LEGEND

EXISTING OVERHEAD STRUCTURE

PROPOSED SIGN PANEL

I-10 BASELINE

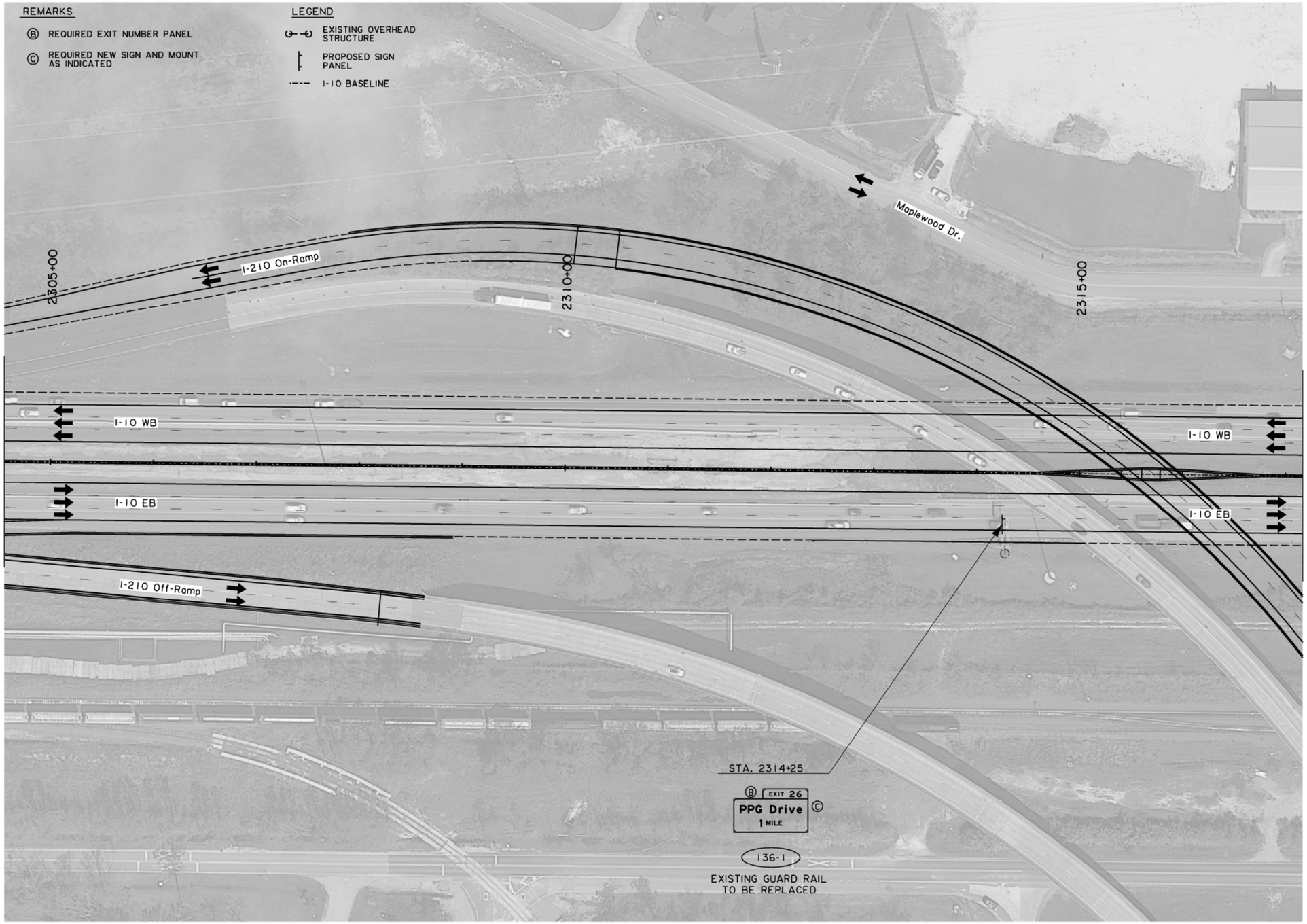

N

0 50' 100'

SCALE: 1"=100'

SHEET NUMBER 42

PARISH	CONTROL SECTION	STATE PROJECT
CALCASIEU	450-91	H.003931

DESIGN	M. AGUIRRE	DETAIL	M. AGUIRRE
CHECK	A. DEITCH	CHECK	A. DEITCH
REVIEW		SERIES #	5 OF 33

TECHNICAL PROPOSAL

PRELIMINARY

NOT FOR CONSTRUCTION

ENGINEER: ARI DEITCH

LICENSE #: 41842

DATE: 04/19/2023

NO.	DATE	REVISION OR CHANGE ORDER DESCRIPTION	BY

PROPOSED SIGN LAYOUT

I-10 CALCASIEU RIVER BRIDGE P3

DOTD LOUISIANA DEPARTMENT OF TRANSPORTATION & DEVELOPMENT

CBP CALCASIEU BRIDGE PARTNERS

TECHNICAL PROPOSAL

04/19/23

REMARKS

Ⓐ REQUIRED NEW SIGN AND BREAKAWAY SUPPORT

LEGEND

PROPOSED "TYPE D" SIGN

I-10 BASELINE



0 50′ 100′

SCALE: 1"=100′

N

SHEET NUMBER	43
PARISH	CALCASIEU
CONTROL SECTION	450-91
STATE PROJECT	H.003931

DESIGN	M. AGUIRRE
CHECK	A. DEITCH
DETAIL	M. AGUIRRE
CHECK	A. DEITCH
REVIEW	
SERIES #	6 OF 33

TECHNICAL PROPOSAL

PRELIMINARY

NOT FOR CONSTRUCTION

ENGINEER:
ARI DEITCH

LICENSE #:
41842

DATE:
04/19/2023

NO.	DATE	REVISION OR CHANGE ORDER DESCRIPTION	BY

PROPOSED SIGN LAYOUT

I-10 CALCASIEU RIVER BRIDGE P3

DOTD LOUISIANA DEPARTMENT OF TRANSPORTATION & DEVELOPMENT

CBP CALCASIEU BRIDGE PARTNERS

TECHNICAL PROPOSAL

04/19/23

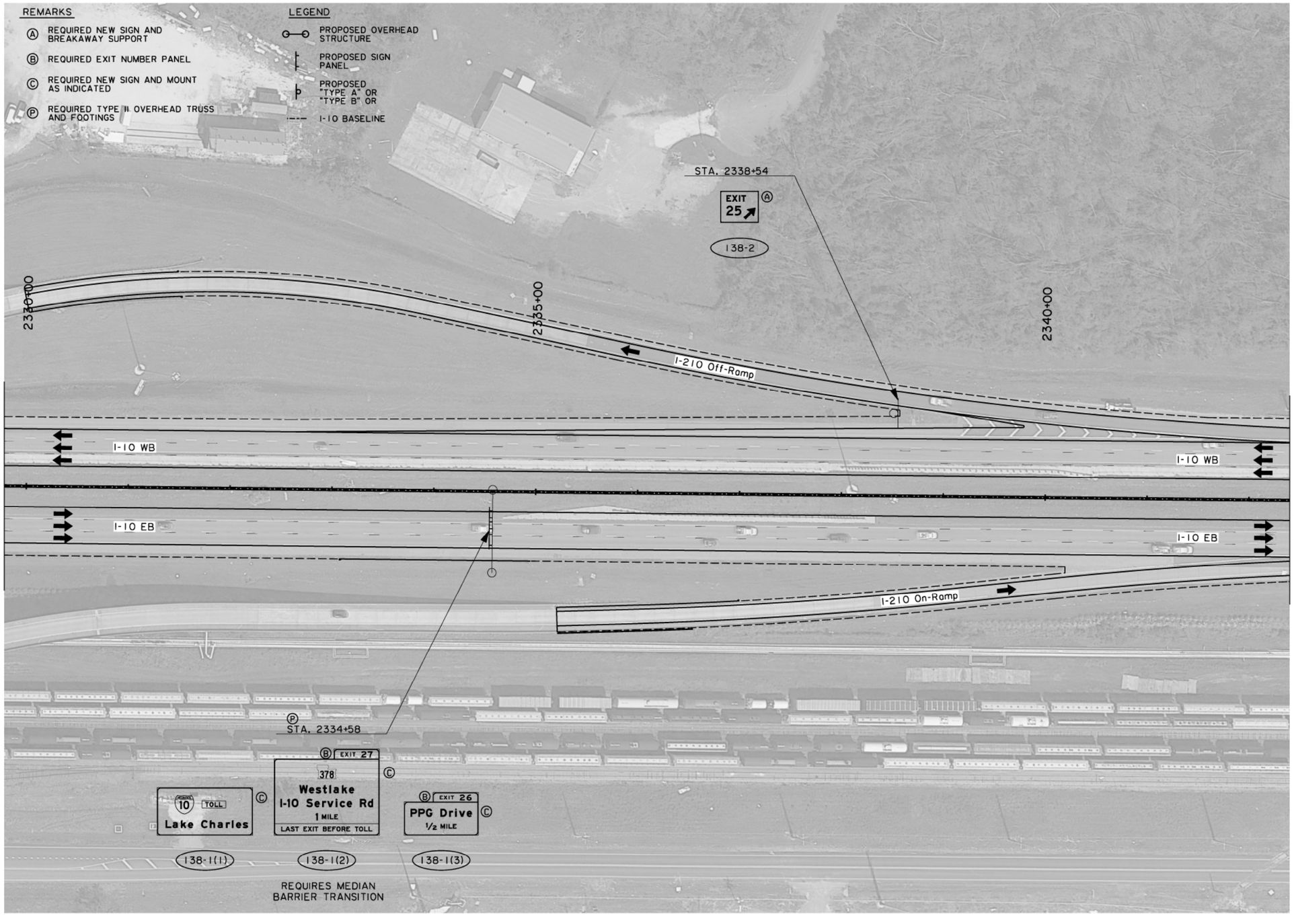

SHEET NUMBER	44

PARISH	CONTROL SECTION	STATE PROJECT
CALCASIEU	450-91	H.003931

DESIGN	M. AGUIRRE
CHECK	A. DEITCH
DETAIL	M. AGUIRRE
CHECK	A. DEITCH
REVIEW	
SERIES #	7 OF 33

TECHNICAL PROPOSAL

PRELIMINARY
NOT FOR CONSTRUCTION
ENGINEER:
ARI DEITCH
LICENSE #:
41842
DATE:
04/19/2023

NO.	DATE	REVISION OR CHANGE ORDER DESCRIPTION	BY

PROPOSED SIGN LAYOUT

I-10 CALCASIEU RIVER BRIDGE P3

DOTD LOUISIANA DEPARTMENT OF TRANSPORTATION & DEVELOPMENT

CBP CALCASIEU BRIDGE PARTNERS

TECHNICAL PROPOSAL

04/19/23

REMARKS

- (A) REQUIRED NEW SIGN AND BREAKAWAY SUPPORT
- (B) REQUIRED EXIT NUMBER PANEL
- (C) REQUIRED NEW SIGN AND MOUNT AS INDICATED
- (J) REQUIRED MILEPOST AND 6" INCIDENTAL CONCRETE PAVING
- (O) REQUIRED STRUCTURE MOUNTED MILEPOST
- (P) REQUIRED TYPE II OVERHEAD TRUSS AND FOOTINGS
- (Q) REQUIRED OVERHEAD CANTILEVER AND FOOTING
- (V) REQUIRED BARRIER MOUNT

LEGEND

- PROPOSED OVERHEAD STRUCTURE
- PROPOSED SIGN PANEL
- PROPOSED "TYPE A" OR "TYPE B" OR
- I-10 BASELINE



0 50' 100'

SCALE: 1"=100'

N

SHEET NUMBER	45

PARISH	CONTROL SECTION	STATE PROJECT
CALCASIEU	450-91	H.003931

DESIGN	M. AGUIRRE	DETAIL	M. AGUIRRE	REVIEW	SERIES * 8 OF 33
CHECK	A. DEITCH	CHECK	A. DEITCH		

TECHNICAL PROPOSAL

PRELIMINARY
NOT FOR CONSTRUCTION

ENGINEER:
ART DEITCH

LICENSE #:
41842

DATE:
04/19/2023

NO.	DATE	REVISION OR CHANGE ORDER DESCRIPTION	BY

PROPOSED SIGN LAYOUT

I-10 CALCASIEU RIVER BRIDGE P3

DOTD LOUISIANA DEPARTMENT OF TRANSPORTATION & DEVELOPMENT

CBP CALCASIEU BRIDGE PARTNERS

TECHNICAL PROPOSAL

04/19/23

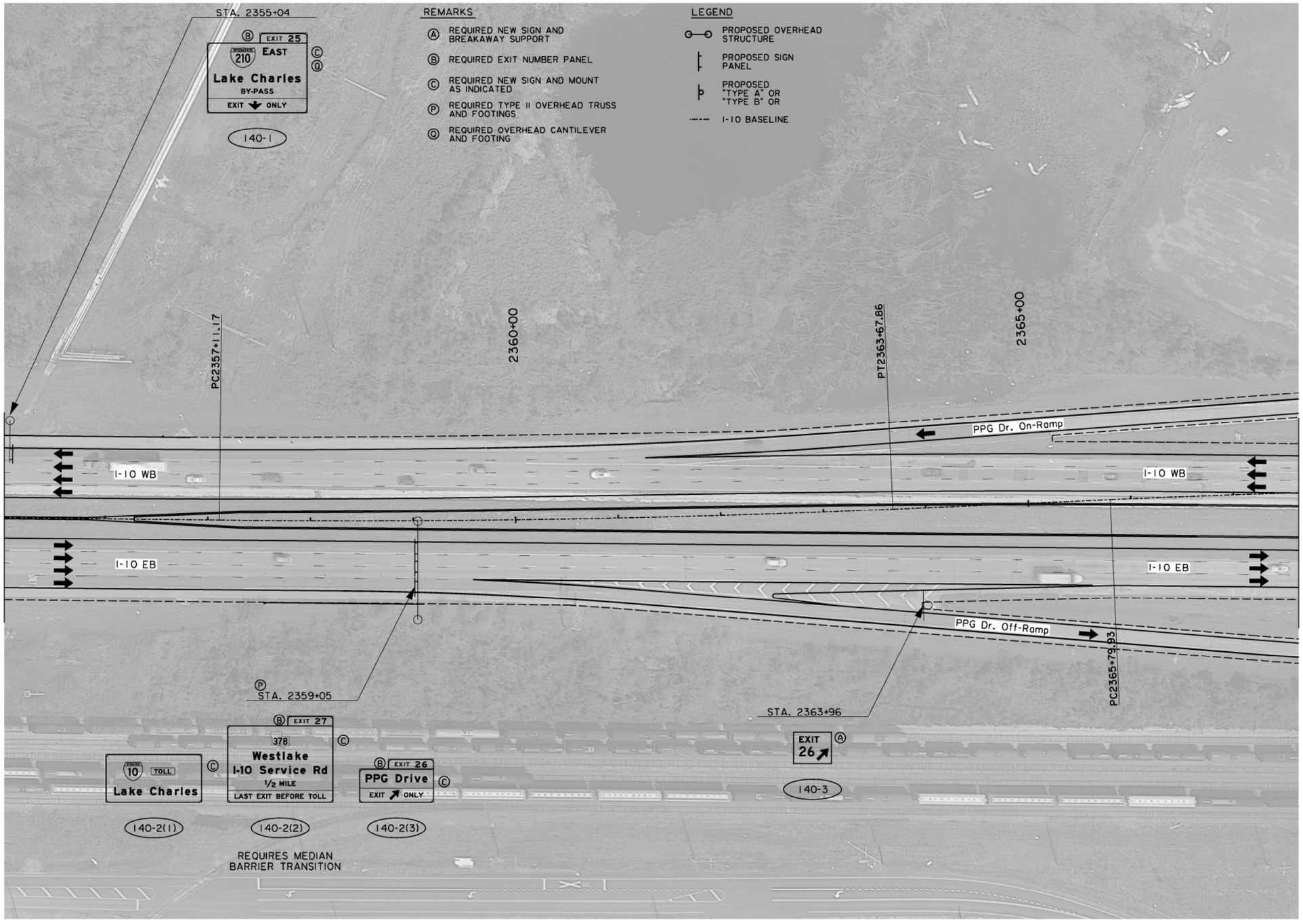

SHEET NUMBER 46

PARISH	CONTROL SECTION	STATE PROJECT
CALCASIEU	450-91	H.003931

DESIGN	M. AGUIRRE	DETAIL	M. AGUIRRE
CHECK	A. DEITCH	CHECK	A. DEITCH
REVIEW		SERIES #	9 OF 33

TECHNICAL PROPOSAL
PRELIMINARY
NOT FOR CONSTRUCTION
ENGINEER:
ART DEITCH
LICENSE #: 41842
DATE: 04/19/2023

NO.	DATE	REVISION OR CHANGE ORDER DESCRIPTION	BY

PROPOSED SIGN LAYOUT

I-10 CALCASIEU RIVER BRIDGE P3

DOTD LOUISIANA DEPARTMENT OF TRANSPORTATION & DEVELOPMENT

CBP CALCASIEU BRIDGE PARTNERS

TECHNICAL PROPOSAL

04/19/23

REMARKS

Ⓐ REQUIRED NEW SIGN AND BREAKAWAY SUPPORT

Ⓒ REQUIRED NEW SIGN AND MOUNT AS INDICATED

LEGEND

PROPOSED "TYPE D" SIGN

PROPOSED "TYPE A" OR "TYPE B" OR

I-10 BASELINE

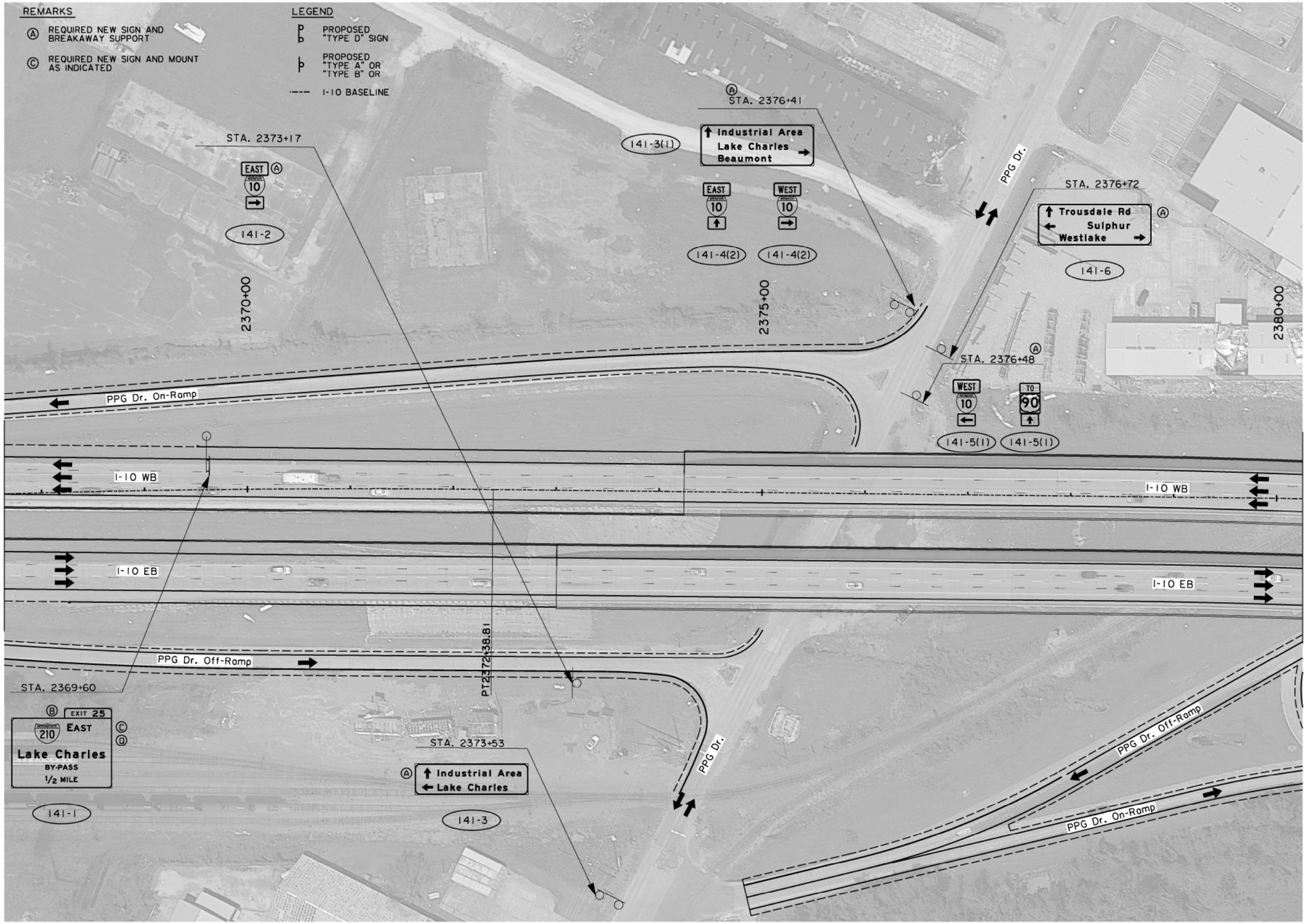

0 50′ 100′

SCALE: 1"=100′

N

SHEET NUMBER	47

PARISH	CONTROL SECTION	STATE PROJECT
CALCASIEU	450-91	H.003931

DESIGN	M. AGUIRRE
CHECK	A. DEITCH
DETAIL	M. AGUIRRE
CHECK	A. DEITCH
REVIEW	
SERIES #	10 OF 33

TECHNICAL PROPOSAL

PRELIMINARY

NOT FOR CONSTRUCTION

ENGINEER: ART DEITCH

LICENSE #: 41842

DATE: 04/19/2023

NO.	DATE	REVISION OR CHANGE ORDER DESCRIPTION	BY

PROPOSED SIGN LAYOUT

I-10 CALCASIEU RIVER BRIDGE P3

LOUISIANA DEPARTMENT OF TRANSPORTATION & DEVELOPMENT

CALCASIEU BRIDGE PARTNERS

TECHNICAL PROPOSAL

04/19/23

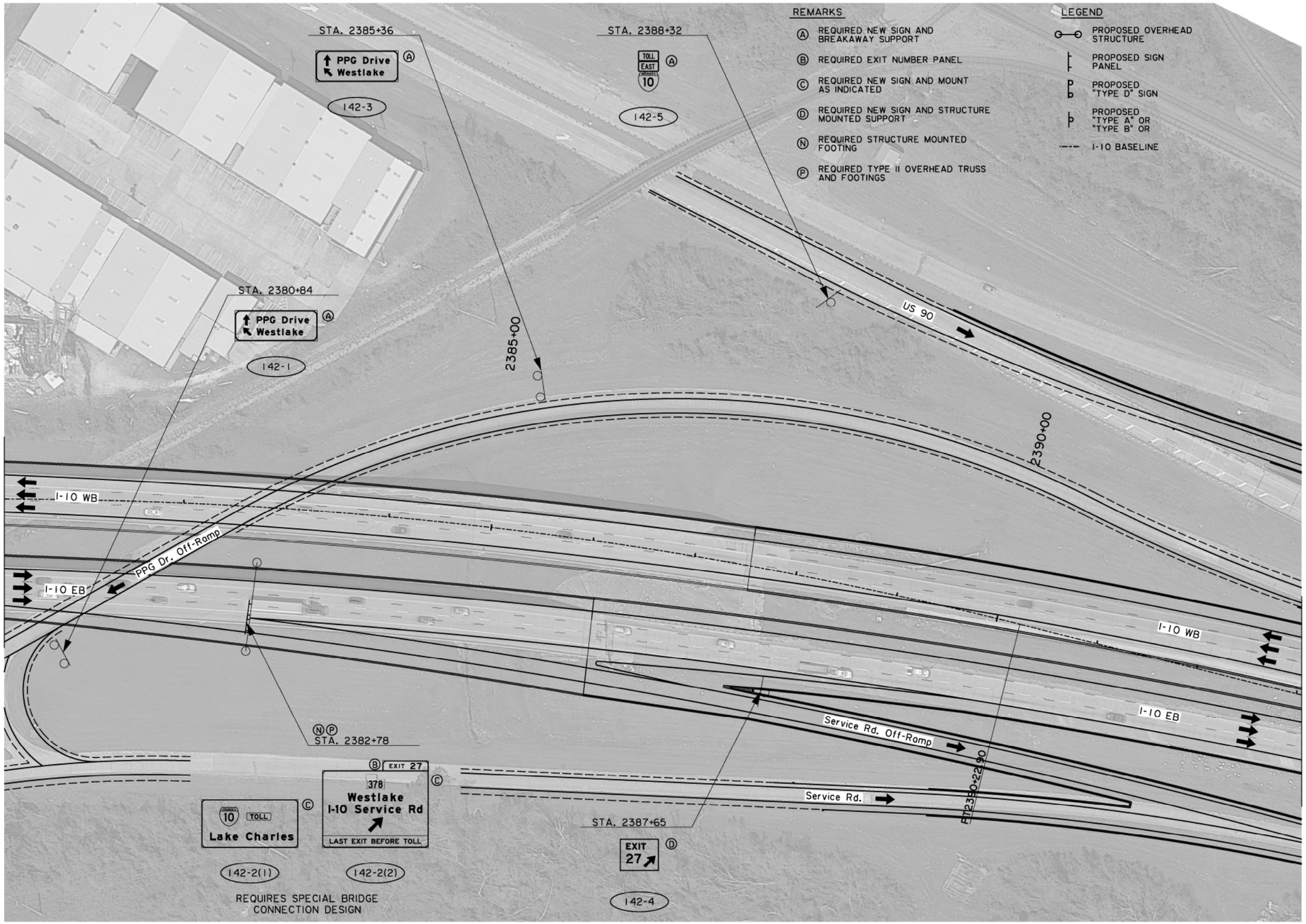

REMARKS

- (A) REQUIRED NEW SIGN AND BREAKAWAY SUPPORT
- (B) REQUIRED EXIT NUMBER PANEL
- (C) REQUIRED NEW SIGN AND MOUNT AS INDICATED
- (D) REQUIRED NEW SIGN AND STRUCTURE MOUNTED SUPPORT
- (N) REQUIRED STRUCTURE MOUNTED FOOTING
- (P) REQUIRED TYPE II OVERHEAD TRUSS AND FOOTINGS

LEGEND

- PROPOSED OVERHEAD STRUCTURE
- PROPOSED SIGN PANEL
- PROPOSED "TYPE D" SIGN
- PROPOSED "TYPE A" OR "TYPE B" OR
- I-10 BASELINE

N

0 50' 100'

SCALE: 1"=100'

SHEET NUMBER	48

PARISH	CONTROL SECTION	STATE PROJECT
CALCASIEU	450-91	H.003931

DESIGN	M. AGUIRRE
CHECK	A. DEITCH
DETAIL	M. AGUIRRE
CHECK	A. DEITCH
REVIEW	
SERIES #	11 OF 33

TECHNICAL PROPOSAL

PRELIMINARY
NOT FOR CONSTRUCTION

ENGINEER:
ARI DEITCH

LICENSE #:
41842

DATE:
04/19/2023

NO.	DATE	REVISION OR CHANGE ORDER DESCRIPTION	BY

PROPOSED SIGN LAYOUT

I-10 CALCASIEU RIVER BRIDGE P3

DOTD
LOUISIANA DEPARTMENT OF TRANSPORTATION & DEVELOPMENT

CBP
CALCASIEU BRIDGE PARTNERS

TECHNICAL PROPOSAL 04/19/23

REMARKS

- (B) REQUIRED EXIT NUMBER PANEL
- (C) REQUIRED NEW SIGN AND MOUNT AS INDICATED
- (P) REQUIRED TYPE II OVERHEAD TRUSS AND FOOTINGS
- (Q) REQUIRED OVERHEAD CANTILEVER AND FOOTING

LEGEND

- PROPOSED OVERHEAD STRUCTURE
- PROPOSED SIGN PANEL
- I-10 BASELINE

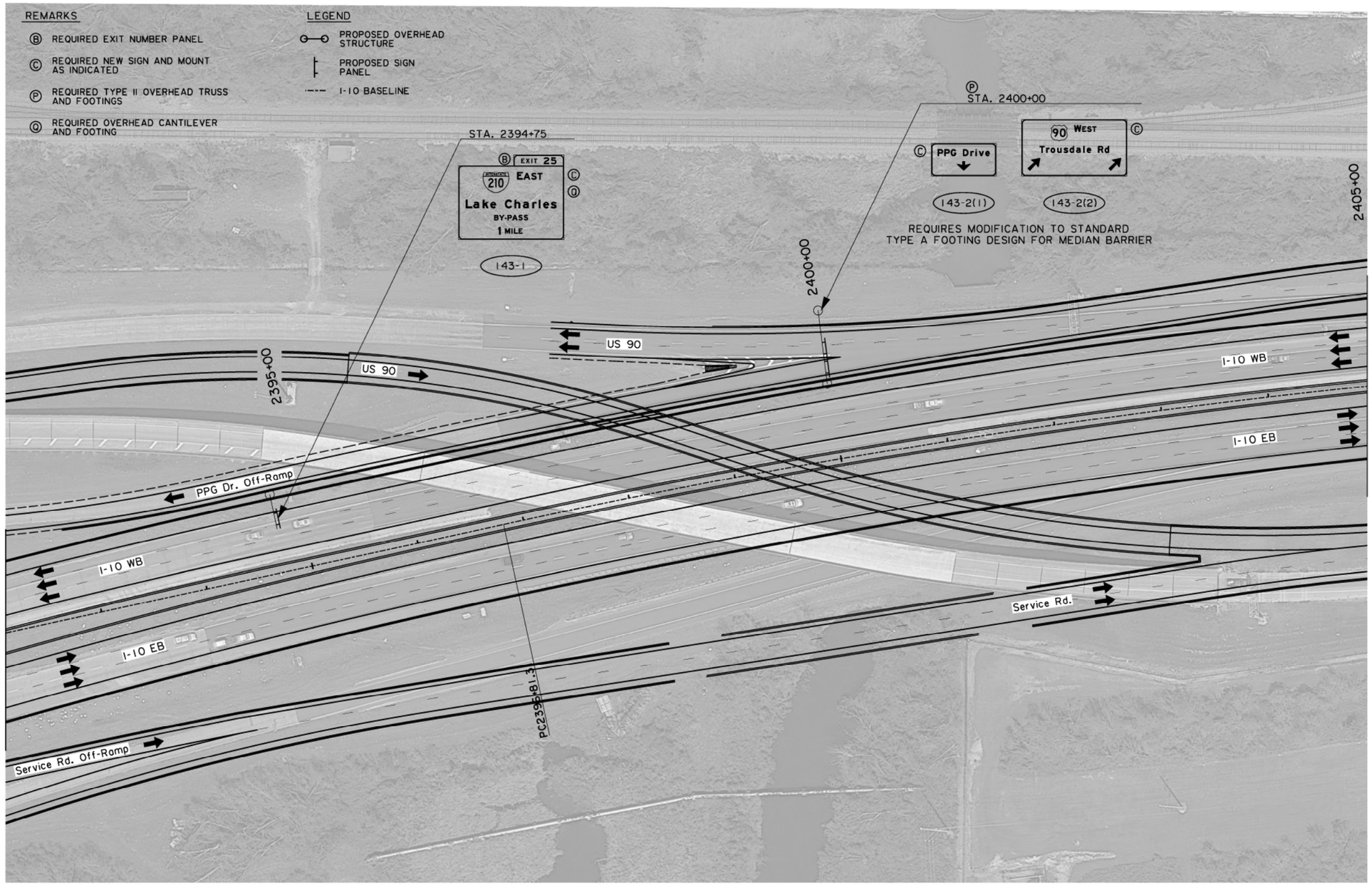

0 50' 100'
SCALE: 1"=100'

N

SHEET NUMBER	49

PARISH	CONTROL SECTION	STATE PROJECT
CALCASIEU	450-91	H.003931

	DESIGN	CHECK	DETAIL	CHECK	REVIEW	SERIES #
	M. AGUIRRE	A. DEITCH	M. AGUIRRE	A. DEITCH		12 OF 33

TECHNICAL PROPOSAL
PRELIMINARY
NOT FOR CONSTRUCTION
ENGINEER:
ARI DEITCH
LICENSE #:
41842
DATE:
04/19/2023

NO.	DATE	REVISION OR CHANGE ORDER DESCRIPTION	BY

PROPOSED SIGN LAYOUT

I-10 CALCASIEU RIVER BRIDGE P3

DOTD LOUISIANA DEPARTMENT OF TRANSPORTATION & DEVELOPMENT

CBP CALCASIEU BRIDGE PARTNERS

TECHNICAL PROPOSAL 04/19/23

REMARKS

- (A) REQUIRED NEW SIGN AND BREAKAWAY SUPPORT
- (B) REQUIRED EXIT NUMBER PANEL
- (C) REQUIRED NEW SIGN AND MOUNT AS INDICATED
- (J) REQUIRED MILEPOST AND 6" INCIDENTAL CONCRETE PAVING
- (O) REQUIRED STRUCTURE MOUNTED MILEPOST
- (P) REQUIRED TYPE II OVERHEAD TRUSS AND FOOTINGS
- (V) REQUIRED BARRIER MOUNT

LEGEND

- PROPOSED OVERHEAD STRUCTURE
- PROPOSED SIGN PANEL
- PROPOSED "TYPE A" OR "TYPE B" OR
- I-10 BASELINE

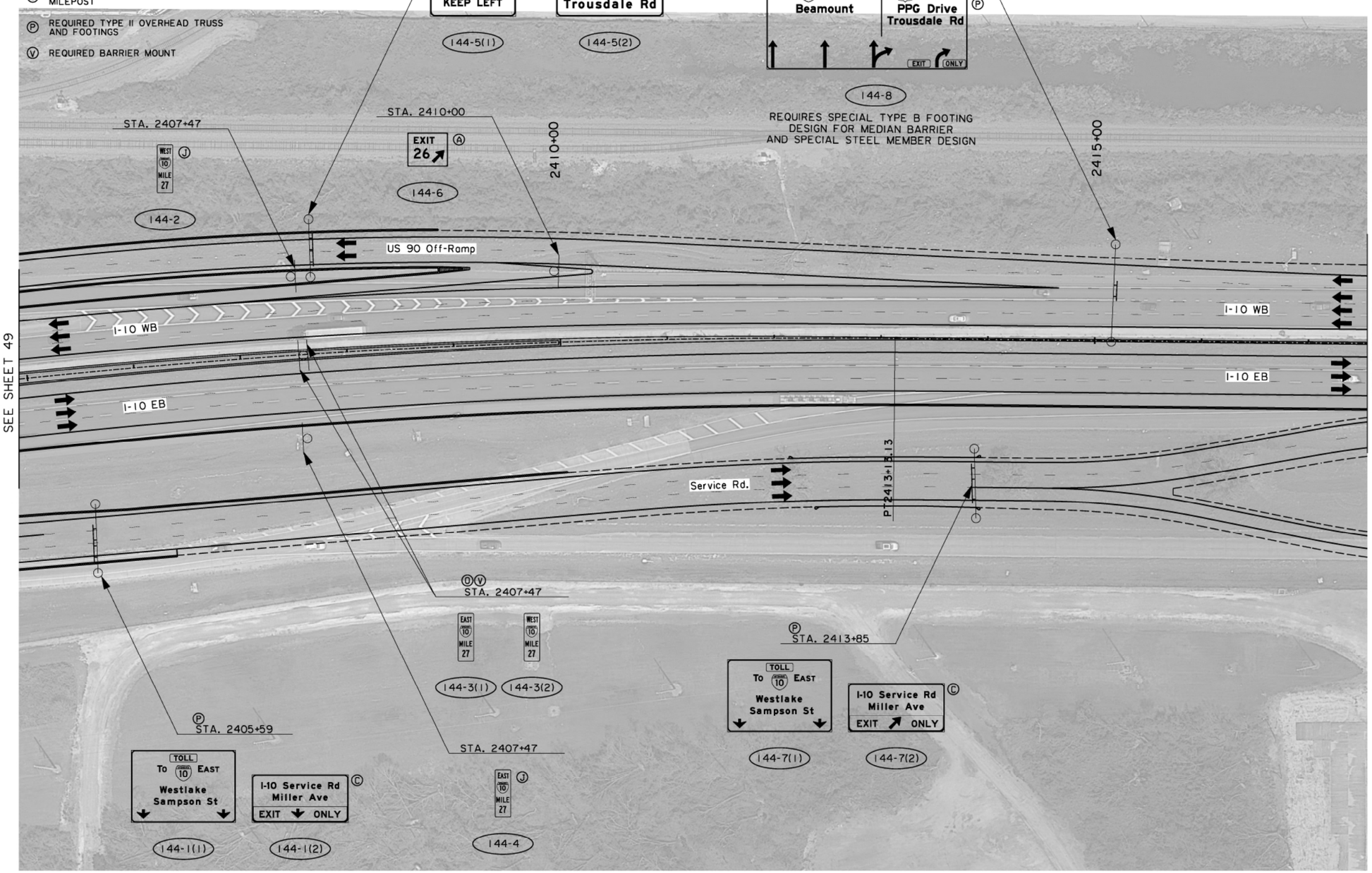

N

0 50' 100'

SCALE: 1"=100'

SHEET NUMBER	50
PARISH	CALCASIEU
CONTROL SECTION	450-91
STATE PROJECT	H.003931
DESIGN	M. AGUIRRE
CHECK	A. DEITCH
DETAIL	M. AGUIRRE
CHECK	A. DEITCH
REVIEW	
SERIES #	13 OF 33

TECHNICAL PROPOSAL
PRELIMINARY
NOT FOR CONSTRUCTION
ENGINEER:
ART DEITCH
LICENSE #:
41842
DATE:
04/19/2023

NO.	DATE	REVISION OR CHANGE ORDER DESCRIPTION	BY

PROPOSED SIGN LAYOUT

I-10 CALCASIEU RIVER BRIDGE P3

DOTD LOUISIANA DEPARTMENT OF TRANSPORTATION & DEVELOPMENT

CBP CALCASIEU BRIDGE PARTNERS

TECHNICAL PROPOSAL

04/19/23

REMARKS

Ⓒ REQUIRED NEW SIGN AND MOUNT AS INDICATED

Ⓟ REQUIRED TYPE II OVERHEAD TRUSS AND FOOTINGS

LEGEND

PROPOSED OVERHEAD STRUCTURE

PROPOSED SIGN PANEL

I-10 BASELINE



N

0 50' 100'

SCALE: 1"=100'

SHEET NUMBER 51

PARISH CALCASIEU | CONTROL SECTION 450-91 | STATE PROJECT H.003931

DESIGN M. AGUIRRE | CHECK A. DEITCH | DETAIL M. AGUIRRE | CHECK A. DEITCH | REVIEW | SERIES # 14 OF 33

TECHNICAL PROPOSAL

PRELIMINARY

NOT FOR CONSTRUCTION

ENGINEER: ART DEITCH

LICENSE #: 41842

DATE: 04/19/2023

NO.	DATE	REVISION OR CHANGE ORDER DESCRIPTION	BY

PROPOSED SIGN LAYOUT

I-10 CALCASIEU RIVER BRIDGE P3

DOTD LOUISIANA DEPARTMENT OF TRANSPORTATION & DEVELOPMENT

CBP CALCASIEU BRIDGE PARTNERS

TECHNICAL PROPOSAL 04/19/23

REMARKS

Ⓑ REQUIRED EXIT NUMBER PANEL

Ⓒ REQUIRED NEW SIGN AND MOUNT AS INDICATED

Ⓟ REQUIRED TYPE II OVERHEAD TRUSS AND FOOTINGS

Ⓠ REQUIRED OVERHEAD CANTILEVER AND FOOTING

LEGEND

PROPOSED OVERHEAD STRUCTURE

PROPOSED SIGN PANEL

I-10 BASELINE

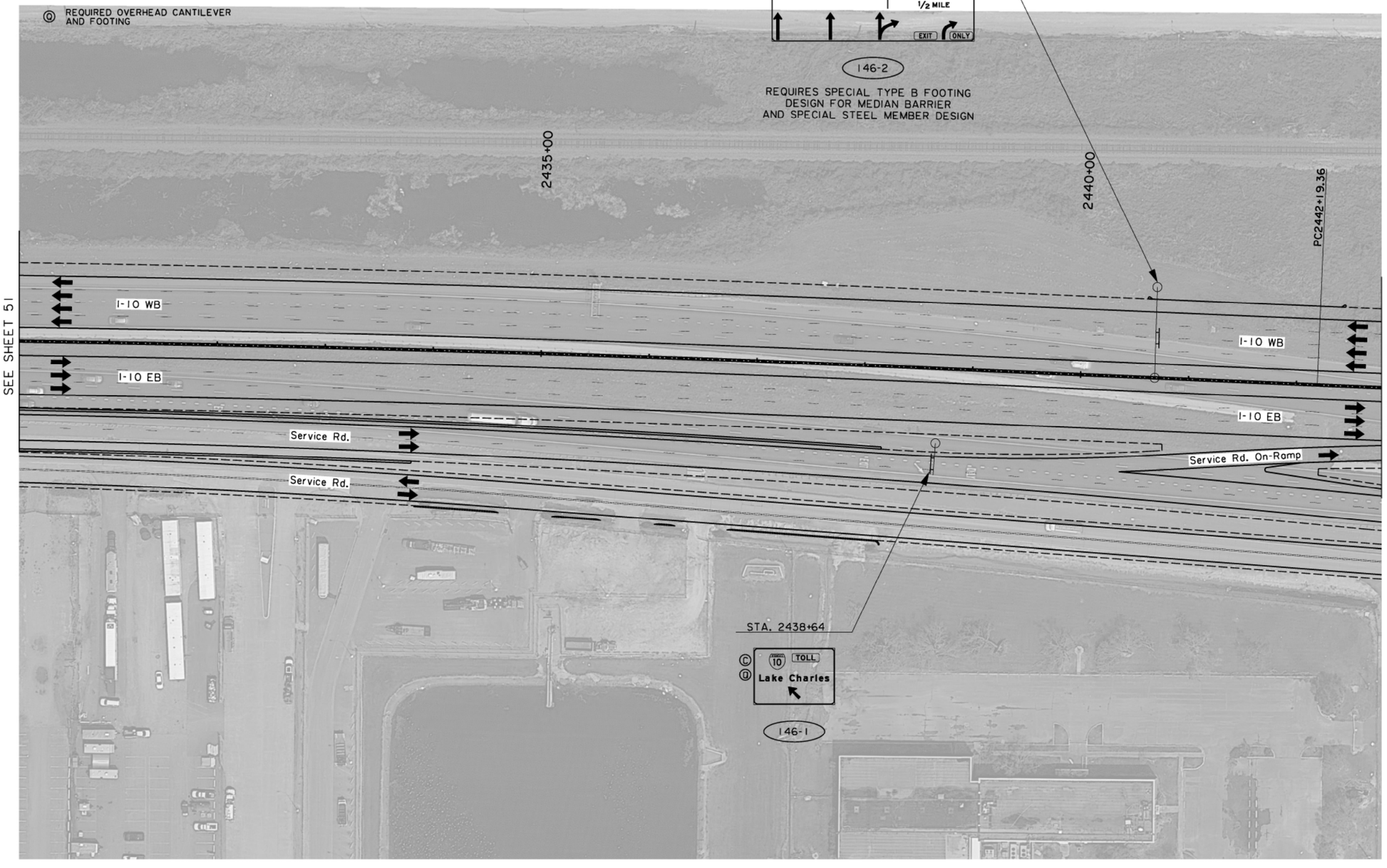

0 50′ 100′

SCALE: 1"=100′

N

SHEET NUMBER	52
PARISH	CALCASIEU
CONTROL SECTION	450-91
STATE PROJECT	H.003931
DESIGN	M. AGUIRRE
CHECK	A. DEITCH
DETAIL	M. AGUIRRE
CHECK	A. DEITCH
REVIEW	
SERIES #	15 OF 33

TECHNICAL PROPOSAL

PRELIMINARY
NOT FOR CONSTRUCTION

ENGINEER:
ART DEITCH

LICENSE #:
41842

DATE:
04/19/2023

NO.	DATE	REVISION OR CHANGE ORDER DESCRIPTION	BY

PROPOSED SIGN LAYOUT

I-10 CALCASIEU RIVER BRIDGE P3

DOTD LOUISIANA DEPARTMENT OF TRANSPORTATION & DEVELOPMENT

CBP CALCASIEU BRIDGE PARTNERS

TECHNICAL PROPOSAL

04/19/23

REMARKS

Ⓐ REQUIRED NEW SIGN AND BREAKAWAY SUPPORT

Ⓒ REQUIRED NEW SIGN AND MOUNT AS INDICATED

Ⓟ REQUIRED TYPE II OVERHEAD TRUSS AND FOOTINGS

LEGEND

PROPOSED OVERHEAD STRUCTURE

PROPOSED SIGN PANEL

PROPOSED "TYPE D" SIGN

I-10 BASELINE

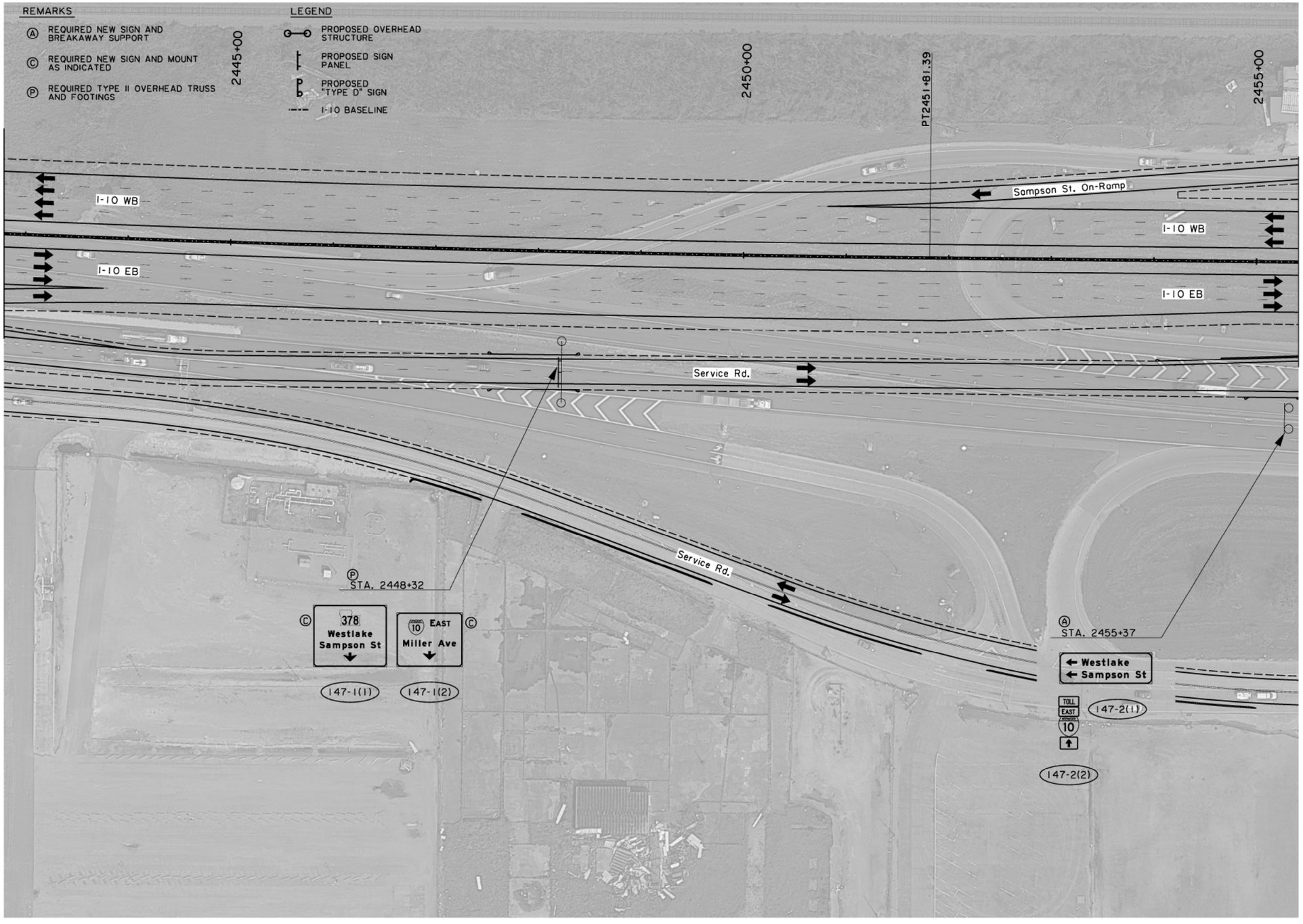

N

0 50′ 100′

SCALE: 1"=100′

SHEET NUMBER	53
PARISH	CALCASIEU
CONTROL SECTION	450-91
STATE PROJECT	H.003931

DESIGN	M. AGUIRRE	DETAIL	M. AGUIRRE
CHECK	A. DEITCH	CHECK	A. DEITCH
REVIEW		SERIES *	16 OF 33

TECHNICAL PROPOSAL

PRELIMINARY

NOT FOR CONSTRUCTION

ENGINEER: ART DEITCH

LICENSE #: 41842

DATE: 04/19/2023

NO.	DATE	REVISION OR CHANGE ORDER DESCRIPTION	BY

PROPOSED SIGN LAYOUT

I-10 CALCASIEU RIVER BRIDGE P3

DOTD LOUISIANA DEPARTMENT OF TRANSPORTATION & DEVELOPMENT

CBP CALCASIEU BRIDGE PARTNERS

TECHNICAL PROPOSAL

04/19/23

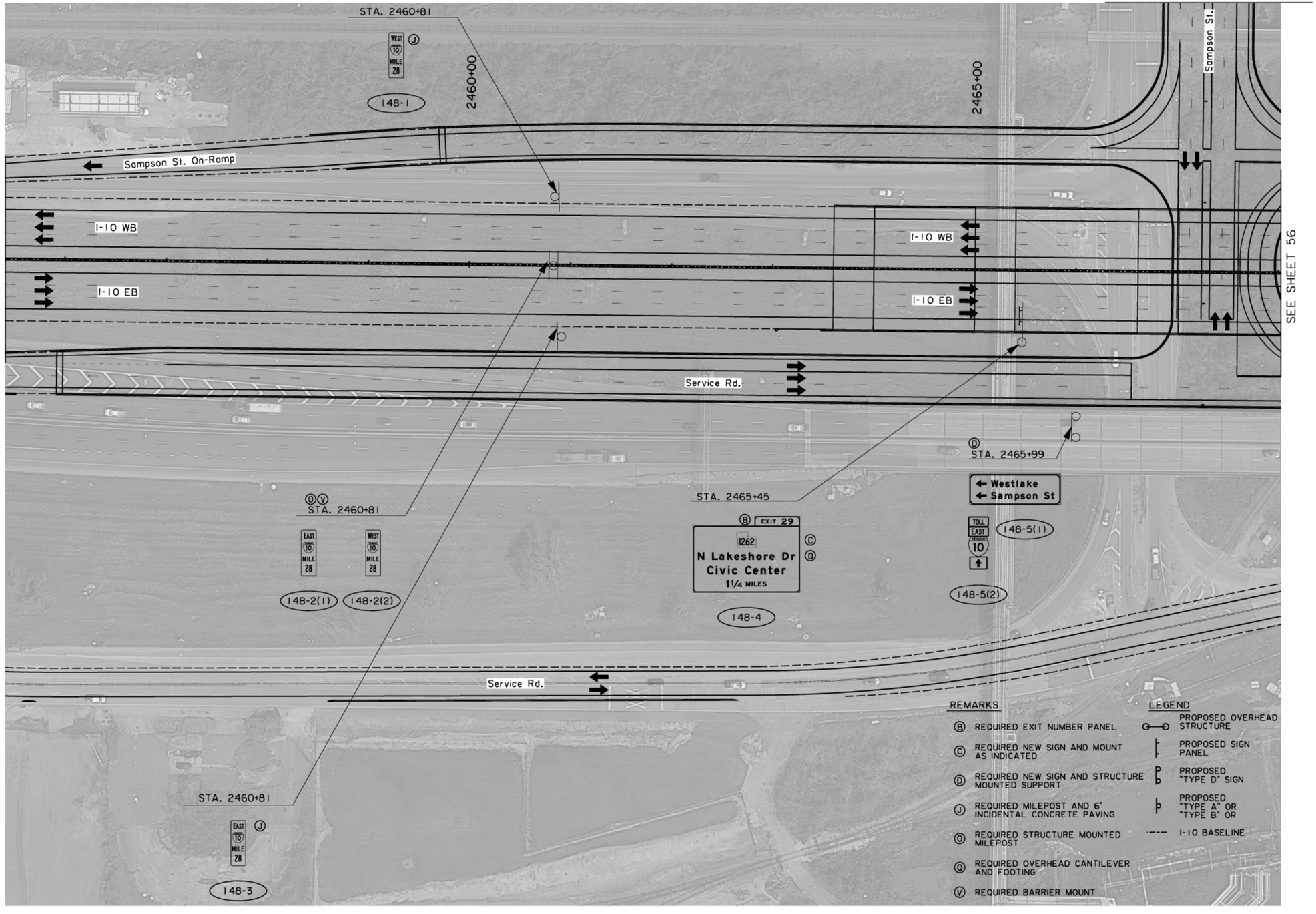

SHEET NUMBER	54

PARISH	CONTROL SECTION	STATE PROJECT
CALCASIEU	450-91	H.003931

DESIGN	CHECK	DETAIL	CHECK	REVIEW	SERIES *
M. AGUIRRE	A. DEITCH	M. AGUIRRE	A. DEITCH		17 OF 33

TECHNICAL PROPOSAL
PRELIMINARY
NOT FOR CONSTRUCTION
ENGINEER:
ART DEITCH
LICENSE #:
41842
DATE:
04/19/2023

NO.	DATE	REVISION OR CHANGE ORDER DESCRIPTION	BY

PROPOSED SIGN LAYOUT

I-10 CALCASIEU RIVER BRIDGE P3

DOTD LOUISIANA DEPARTMENT OF TRANSPORTATION & DEVELOPMENT

CBP CALCASIEU BRIDGE PARTNERS

TECHNICAL PROPOSAL

04/19/23

REMARKS

Ⓒ REQUIRED NEW SIGN AND MOUNT AS INDICATED

Ⓓ REQUIRED NEW SIGN AND STRUCTURE MOUNTED SUPPORT

Ⓝ REQUIRED STRUCTURE MOUNTED FOOTING

Ⓟ REQUIRED TYPE II OVERHEAD TRUSS AND FOOTINGS

LEGEND

PROPOSED OVERHEAD STRUCTURE

PROPOSED SIGN PANEL

PROPOSED "TYPE A" OR "TYPE B" OR

---- SAMPSON ST. BASELINE



SEE SHEET 54

N

0 50' 100'

SCALE: 1"=100'

SHEET NUMBER	55
PARISH	CALCASIEU
CONTROL SECTION	450-91
STATE PROJECT	H.003931
DESIGN	M. AGUIRRE
CHECK	A. DEITCH
DETAIL	M. AGUIRRE
CHECK	A. DEITCH
REVIEW	
SERIES #	18 OF 33

TECHNICAL PROPOSAL
PRELIMINARY
NOT FOR CONSTRUCTION
ENGINEER:
ART DEITCH
LICENSE #:
41842
DATE:
04/19/2023

NO.	DATE	REVISION OR CHANGE ORDER DESCRIPTION	BY

PROPOSED SIGN LAYOUT

I-10 CALCASIEU RIVER BRIDGE P3

LOUISIANA DEPARTMENT OF TRANSPORTATION & DEVELOPMENT

CALCASIEU BRIDGE PARTNERS

TECHNICAL PROPOSAL

04/19/23

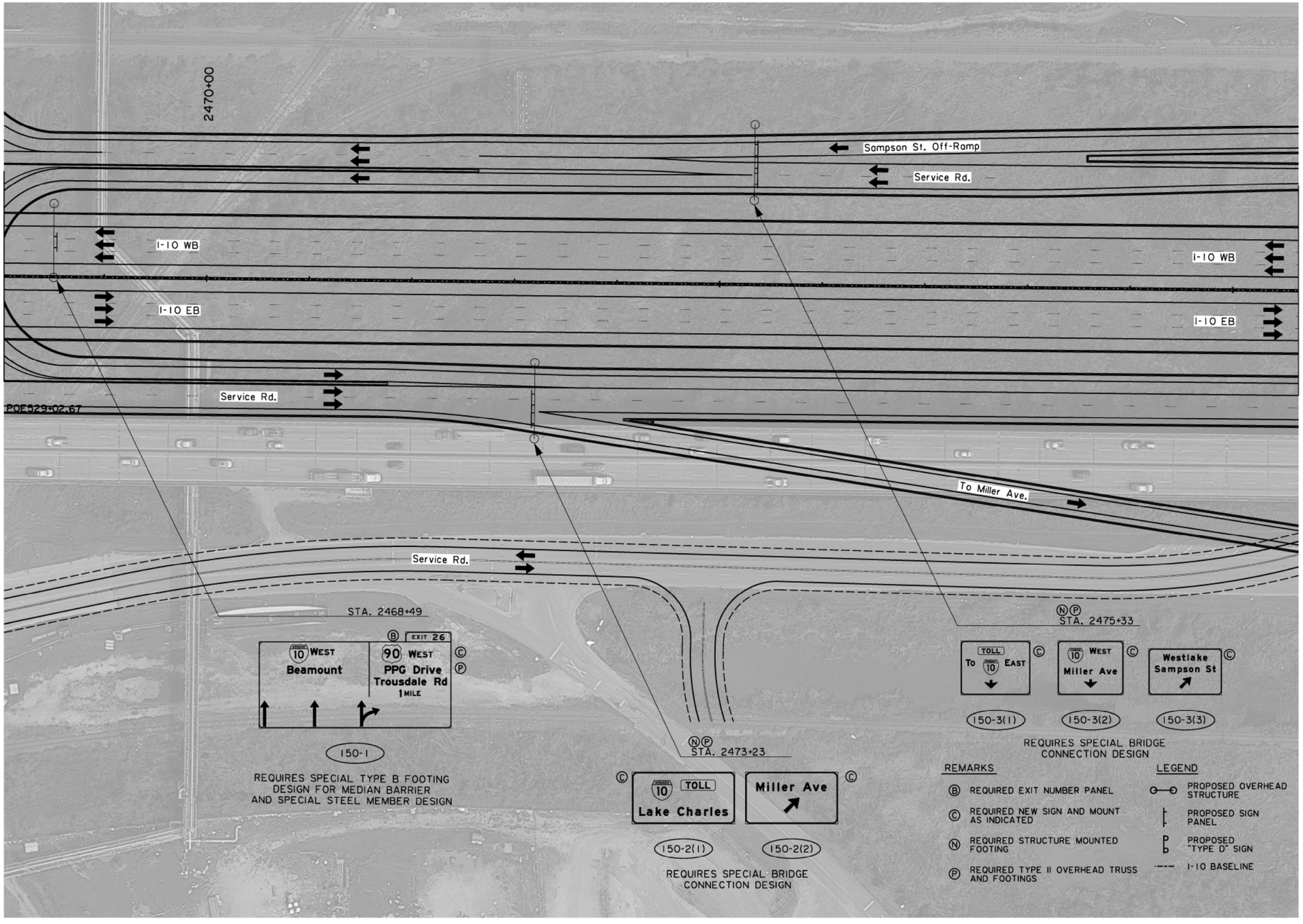

0 50' 100'

SCALE: 1"=100'

SHEET NUMBER	56
PARISH	CALCASIEU
CONTROL SECTION	450-91
STATE PROJECT	H.003931
DESIGN	M. AGUIRRE
CHECK	A. DEITCH
DETAIL	M. AGUIRRE
CHECK	A. DEITCH
REVIEW	
SERIES #	19 OF 33

TECHNICAL PROPOSAL

PRELIMINARY
NOT FOR CONSTRUCTION
ENGINEER:
ART DEITCH

LICENSE #:
41842

DATE:
04/19/2023

NO.	DATE	REVISION OR CHANGE ORDER DESCRIPTION	BY

PROPOSED SIGN LAYOUT

I-10 CALCASIEU RIVER BRIDGE P3

DOTD LOUISIANA DEPARTMENT OF TRANSPORTATION & DEVELOPMENT

CBP CALCASIEU BRIDGE PARTNERS

TECHNICAL PROPOSAL

04/19/23

REMARKS

Ⓐ REQUIRED NEW SIGN AND BREAKAWAY SUPPORT

LEGEND

PROPOSED "TYPE A" OR "TYPE B" OR

I-10 BASELINE

STA. 2488+95

JCT Ⓐ 10

151-3

2490+00

Service Rd.

Sampson St. Off-Ramp

SEE SHEET 56

I-10 WB

I-10 EB

SEE SHEET 58

I-10 WB

I-10 EB

Sampson St. On-Ramp

Service Rd.

To Miller Ave.

STA. 2485+85

JCT Ⓐ 10

151-1

STA. 2488+55

TO Ⓐ 10

151-2

STA. 2489+55

TO Ⓐ 10

151-5

Miller Ave.

STA. 2488+95

TO Ⓐ 10

151-4

STA. 2489+55

JCT Ⓐ 10

151-6

N

0 50′ 100′

SCALE: 1"=100′

SHEET NUMBER	57
PARISH	CALCASIEU
CONTROL SECTION	450-91
STATE PROJECT	H.003931

DESIGN	M. AGUIRRE	DETAIL	M. AGUIRRE
CHECK	A. DEITCH	CHECK	A. DEITCH
REVIEW		SERIES #	20 OF 33

TECHNICAL PROPOSAL

PRELIMINARY

NOT FOR CONSTRUCTION

ENGINEER: ART DEITCH

LICENSE #: 41842

DATE: 04/19/2023

NO.	DATE	REVISION OR CHANGE ORDER DESCRIPTION	BY

PROPOSED SIGN LAYOUT

I-10 CALCASIEU RIVER BRIDGE P3

DOTD LOUISIANA DEPARTMENT OF TRANSPORTATION & DEVELOPMENT

CBP CALCASIEU BRIDGE PARTNERS

TECHNICAL PROPOSAL

04/19/23

REMARKS

- (B) REQUIRED EXIT NUMBER PANEL
- (C) REQUIRED NEW SIGN AND MOUNT AS INDICATED
- (D) REQUIRED NEW SIGN AND STRUCTURE MOUNTED SUPPORT
- (N) REQUIRED STRUCTURE MOUNTED FOOTING
- (O) REQUIRED STRUCTURE MOUNTED MILEPOST

LEGEND

- PROPOSED OVERHEAD STRUCTURE
- PROPOSED SIGN PANEL
- PROPOSED "TYPE A" OR "TYPE B" OR
- I-10 BASELINE



N

0 50' 100'

SCALE: 1"=100'

SHEET NUMBER	58

PARISH	CONTROL SECTION	STATE PROJECT
CALCASIEU	450-91	H.003931

DESIGN	M. AGUIRRE	DETAIL	M. AGUIRRE	REVIEW	
CHECK	A. DEITCH	CHECK	A. DEITCH	SERIES #	21 OF 33

TECHNICAL PROPOSAL

PRELIMINARY

NOT FOR CONSTRUCTION

ENGINEER:
ARI DEITCH

LICENSE #:
41842

DATE:
04/19/2023

NO.	DATE	REVISION OR CHANGE ORDER DESCRIPTION	BY

STATE OF LOUISIANA — DEPARTMENT OF TRANSPORTATION AND DEVELOPMENT

PROPOSED SIGN LAYOUT

I-10 CALCASIEU RIVER BRIDGE P3

DOTD — LOUISIANA DEPARTMENT OF TRANSPORTATION & DEVELOPMENT

CBP — CALCASIEU BRIDGE PARTNERS

TECHNICAL PROPOSAL

04/19/23

REMARKS

- (B) REQUIRED EXIT NUMBER PANEL
- (C) REQUIRED NEW SIGN AND MOUNT AS INDICATED
- (N) REQUIRED STRUCTURE MOUNTED FOOTING
- (O) REQUIRED STRUCTURE MOUNTED MILEPOST
- (P) REQUIRED TYPE II OVERHEAD TRUSS AND FOOTINGS
- (V) REQUIRED BARRIER MOUNT

LEGEND

- PROPOSED OVERHEAD STRUCTURE
- PROPOSED SIGN PANEL
- PROPOSED "TYPE A" OR "TYPE B" OR
- I-10 BASELINE

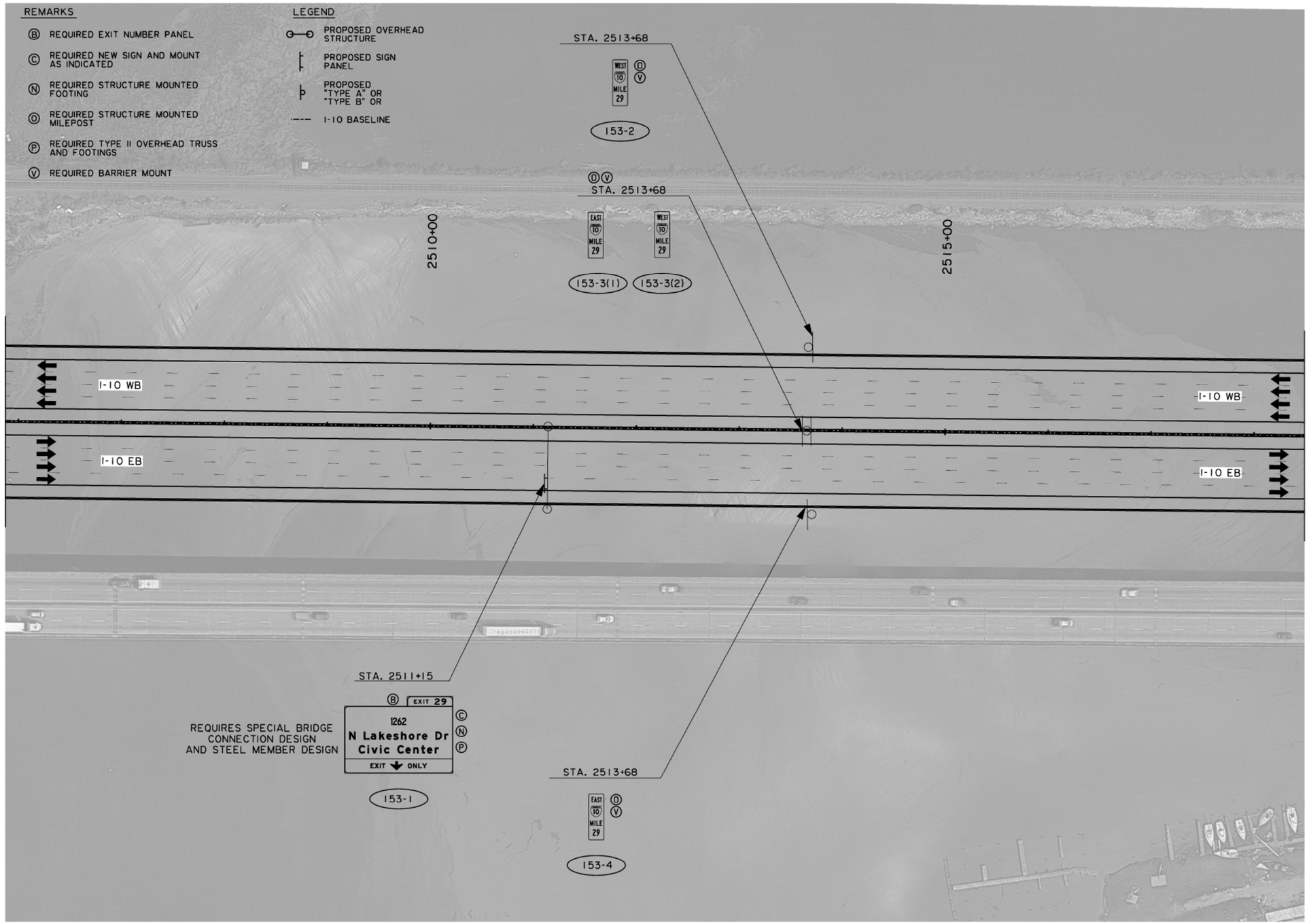

N

0 50' 100'

SCALE: 1"=100'

SHEET NUMBER	59

PARISH	CONTROL SECTION	STATE PROJECT
CALCASIEU	450-91	H.003931

DESIGN	M. AGUIRRE	DETAIL	M. AGUIRRE	REVIEW	
CHECK	A. DEITCH	CHECK	A. DEITCH	SERIES #	22 OF 33

TECHNICAL PROPOSAL

PRELIMINARY

NOT FOR CONSTRUCTION

ENGINEER:
ART DEITCH

LICENSE #:
41842

DATE:
04/19/2023

NO.	DATE	REVISION OR CHANGE ORDER DESCRIPTION	BY

PROPOSED SIGN LAYOUT

I-10 CALCASIEU RIVER BRIDGE P3

DOTD LOUISIANA DEPARTMENT OF TRANSPORTATION & DEVELOPMENT

CBP CALCASIEU BRIDGE PARTNERS

TECHNICAL PROPOSAL

04/19/23

REMARKS

Ⓑ REQUIRED EXIT NUMBER PANEL

Ⓒ REQUIRED NEW SIGN AND MOUNT AS INDICATED

Ⓝ REQUIRED STRUCTURE MOUNTED FOOTING

Ⓠ REQUIRED OVERHEAD CANTILEVER AND FOOTING

LEGEND

PROPOSED OVERHEAD STRUCTURE

PROPOSED SIGN PANEL

I-10 BASELINE

STA. 2523+09

Ⓑ EXIT 28

378

Westlake

EXIT ONLY

Ⓒ Ⓝ Ⓠ REQUIRES SPECIAL BRIDGE CONNECTION DESIGN AND STEEL MEMBER DESIGN

154-1

2520+00

2525+00

2530+00

N. Lakeshore Dr.

I-10 WB

I-10 EB

SEE SHEET 59

SEE SHEET 61

0 50' 100'

SCALE: 1"=100'

N

SHEET NUMBER	60
PARISH	CALCASIEU
CONTROL SECTION	450-91
STATE PROJECT	H.003931
DESIGN	M. AGUIRRE
CHECK	A. DEITCH
DETAIL	M. AGUIRRE
CHECK	A. DEITCH
REVIEW	
SERIES #	23 OF 33

TECHNICAL PROPOSAL

PRELIMINARY

NOT FOR CONSTRUCTION

ENGINEER: ARI DEITCH

LICENSE #: 41842

DATE: 04/19/2023

NO.	DATE	REVISION OR CHANGE ORDER DESCRIPTION	BY

PROPOSED SIGN LAYOUT

I-10 CALCASIEU RIVER BRIDGE P3

DOTD LOUISIANA DEPARTMENT OF TRANSPORTATION & DEVELOPMENT

CBP CALCASIEU BRIDGE PARTNERS

TECHNICAL PROPOSAL

04/19/23

REMARKS

Ⓐ REQUIRED NEW SIGN AND BREAKAWAY SUPPORT

Ⓑ REQUIRED EXIT NUMBER PANEL

Ⓒ REQUIRED NEW SIGN AND MOUNT AS INDICATED

Ⓟ REQUIRED TYPE II OVERHEAD TRUSS AND FOOTINGS

LEGEND

PROPOSED OVERHEAD STRUCTURE

PROPOSED SIGN PANEL

PROPOSED "TYPE A" OR "TYPE B" OR

I-10 BASELINE

N

Ⓟ STA. 2538+00
PROPOSED WB TOLL GANTRY LOCATION

TOLL SITE EQUIPMENT PAD W/ FENCE (12' X 10')

2535+00

2540+00

TOLL SITE MAINTENANCE PAD (50' X 10.5')

N. Lakeshore Dr.

SEE SHEET 60

I-10 WB

I-10 EB

I-10 WB

I-10 EB

SEE SHEET 62

N. Lakeshore Dr. Off-Ramp

Ⓟ STA. 2537+59
PROPOSED EB TOLL GANTRY LOCATION

TOLL SITE MAINTENANCE PAD (50' X 14')

TOLL SITE EQUIPMENT PAD W/ FENCE (12' X 10')

Ⓟ STA. 2537+00

Ⓑ EXIT 29

EAST
10 90
Lafayette
Ⓒ

1262
N Lakeshore Dr
Civic Center
EXIT ONLY
Ⓒ

155-1(1)

155-1(2)

REQUIRES SPECIAL FOOTING DESIGN FOR MEDIAN BARRIER

STA. 2542+10

EXIT 29 Ⓐ

155-2

0 50' 100'

SCALE: 1"=100'

SHEET NUMBER	61
PARISH	CALCASIEU
CONTROL SECTION	450-91
STATE PROJECT	H.003931
DESIGN	M. AGUIRRE
CHECK	A. DEITCH
DETAIL	M. AGUIRRE
CHECK	A. DEITCH
REVIEW	
SERIES #	24 OF 33

TECHNICAL PROPOSAL
PRELIMINARY
NOT FOR CONSTRUCTION
ENGINEER:
ART DEITCH
LICENSE #: 41842
DATE: 04/19/2023

NO.	DATE	REVISION OR CHANGE ORDER DESCRIPTION	BY

PROPOSED SIGN LAYOUT

I-10 CALCASIEU RIVER BRIDGE P3

DOTD LOUISIANA DEPARTMENT OF TRANSPORTATION & DEVELOPMENT

CBP CALCASIEU BRIDGE PARTNERS

TECHNICAL PROPOSAL

04/19/23

REMARKS

(B) REQUIRED EXIT NUMBER PANEL

(C) REQUIRED NEW SIGN AND MOUNT AS INDICATED

(Q) REQUIRED OVERHEAD CANTILEVER AND FOOTING

LEGEND

PROPOSED OVERHEAD STRUCTURE

PROPOSED SIGN PANEL

I-10 BASELINE

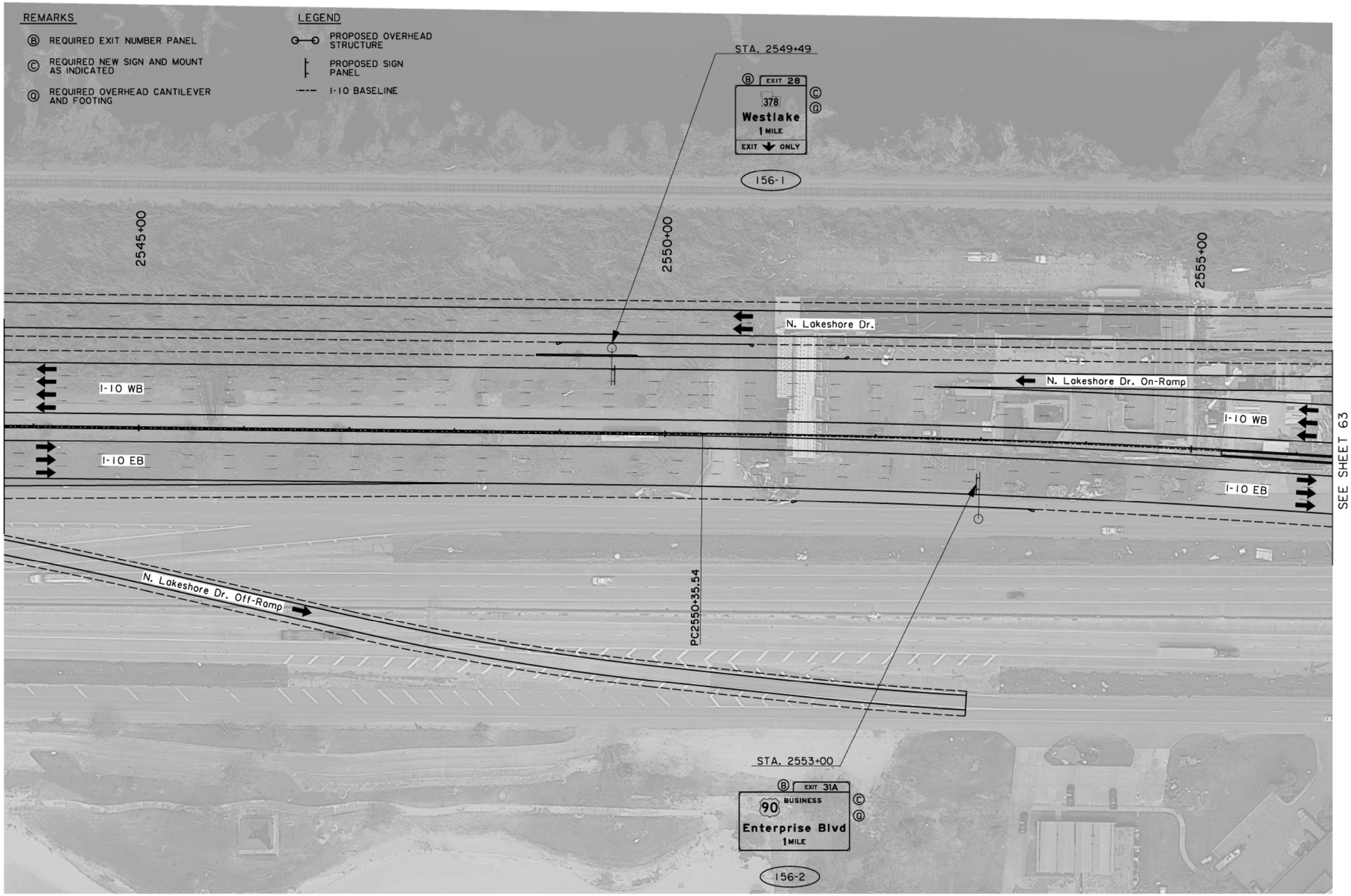

N

0 50' 100'

SCALE: 1"=100'

SHEET NUMBER	62

PARISH	CONTROL SECTION	STATE PROJECT
CALCASIEU	450-91	H.003931

DESIGN	M. AGUIRRE
CHECK	A. DEITCH
DETAIL	M. AGUIRRE
CHECK	A. DEITCH
REVIEW	
SERIES #	25 OF 33

TECHNICAL PROPOSAL

PRELIMINARY

NOT FOR CONSTRUCTION

ENGINEER:
ARI DEITCH

LICENSE #:
41842

DATE:
04/19/2023

NO.	DATE	REVISION OR CHANGE ORDER DESCRIPTION	BY

STATE OF LOUISIANA

PROPOSED SIGN LAYOUT

I-10 CALCASIEU RIVER BRIDGE P3

DOTD LOUISIANA DEPARTMENT OF TRANSPORTATION & DEVELOPMENT

CBP CALCASIEU BRIDGE PARTNERS

TECHNICAL PROPOSAL

04/19/23

REMARKS

- (C) REQUIRED NEW SIGN AND MOUNT AS INDICATED
- (J) REQUIRED MILEPOST AND 6" INCIDENTAL CONCRETE PAVING
- (O) REQUIRED STRUCTURE MOUNTED MILEPOST
- (P) REQUIRED TYPE II OVERHEAD TRUSS AND FOOTINGS
- (V) REQUIRED BARRIER MOUNT

LEGEND

- PROPOSED OVERHEAD STRUCTURE
- PROPOSED SIGN PANEL
- PROPOSED "TYPE A" OR "TYPE B" OR
- I-10 BASELINE

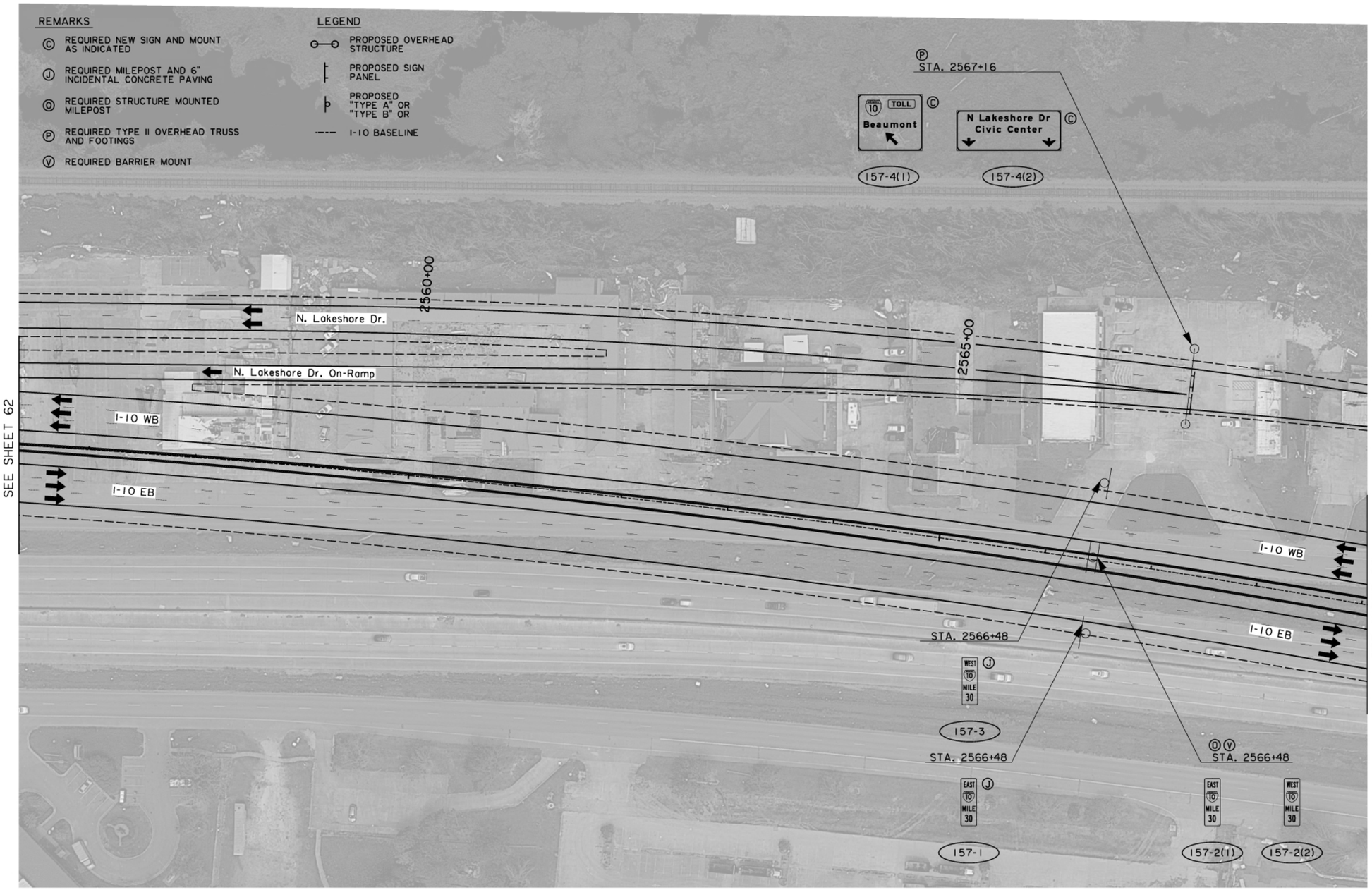

0 50' 100'

SCALE: 1"=100'

SHEET NUMBER	63
PARISH	CALCASIEU
CONTROL SECTION	450-91
STATE PROJECT	H.003931
DESIGN	M. AGUIRRE
CHECK	A. DEITCH
DETAIL	M. AGUIRRE
CHECK	A. DEITCH
REVIEW	
SERIES *	26 OF 33

TECHNICAL PROPOSAL

PRELIMINARY
NOT FOR CONSTRUCTION
ENGINEER:
ARI DEITCH
LICENSE #:
41842
DATE:
04/19/2023

NO.	DATE	REVISION OR CHANGE ORDER DESCRIPTION	BY

STATE OF LOUISIANA DEPARTMENT OF TRANSPORTATION AND DEVELOPMENT

PROPOSED SIGN LAYOUT

I-10 CALCASIEU RIVER BRIDGE P3

DOTD LOUISIANA DEPARTMENT OF TRANSPORTATION & DEVELOPMENT

CBP CALCASIEU BRIDGE PARTNERS

TECHNICAL PROPOSAL

04/19/23

REMARKS

Ⓐ REQUIRED NEW SIGN AND BREAKAWAY SUPPORT

LEGEND

PROPOSED "TYPE D" SIGN

PROPOSED "TYPE A" OR "TYPE B" OR

I-10 BASELINE

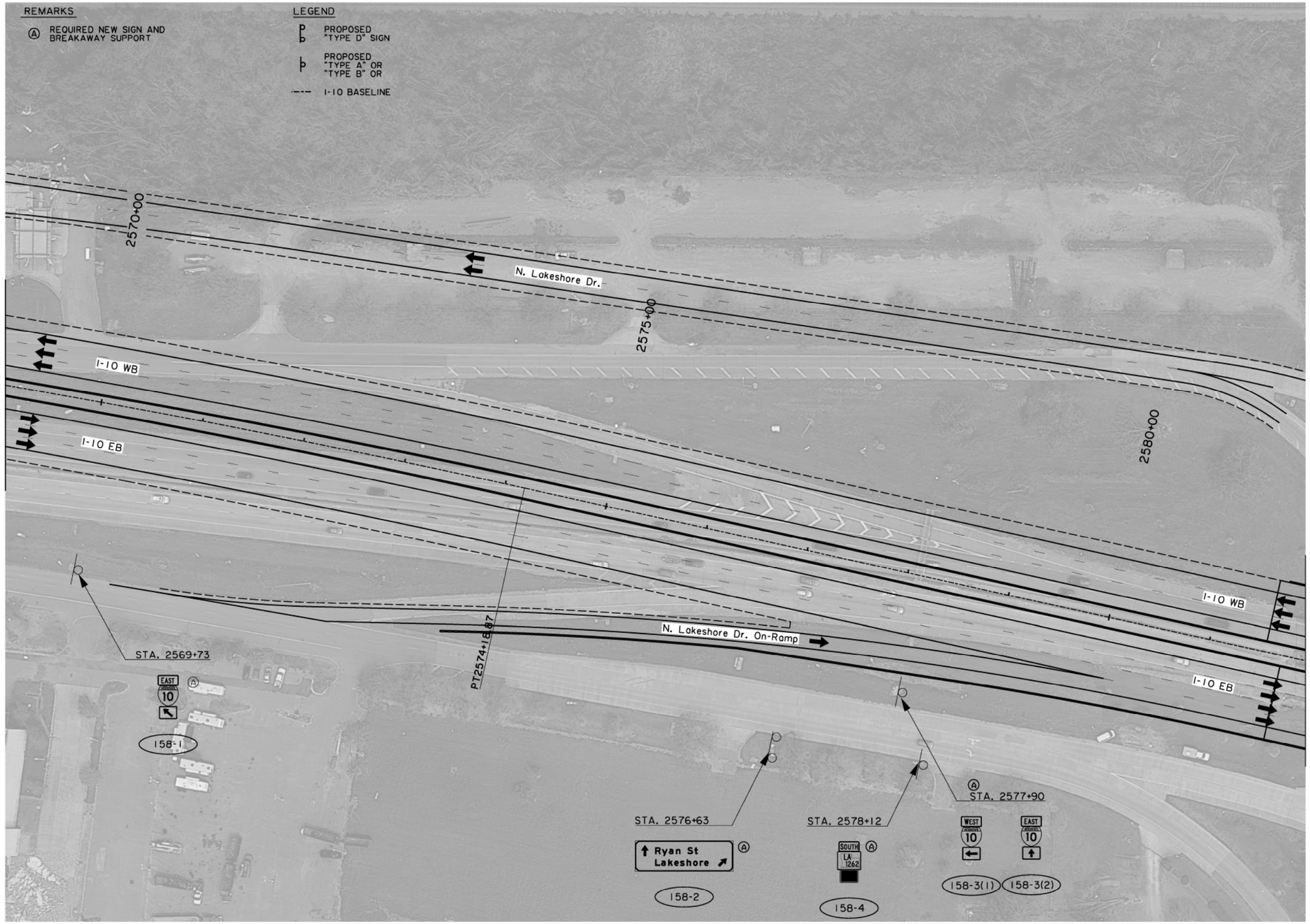

N

0 50′ 100′

SCALE: 1"=100′

SHEET NUMBER	64
PARISH	CALCASIEU
CONTROL SECTION	450-91
STATE PROJECT	H.003931
DESIGN	M. AGUIRRE
CHECK	A. DEITCH
DETAIL	M. AGUIRRE
CHECK	A. DEITCH
REVIEW	
SERIES #	27 OF 33

TECHNICAL PROPOSAL

PRELIMINARY
NOT FOR CONSTRUCTION

ENGINEER:
ART DEITCH

LICENSE #:
41842

DATE:
04/19/2023

NO.	DATE	REVISION OR CHANGE ORDER DESCRIPTION	BY

PROPOSED SIGN LAYOUT

I-10 CALCASIEU RIVER BRIDGE P3

DOTD LOUISIANA DEPARTMENT OF TRANSPORTATION & DEVELOPMENT

CBP CALCASIEU BRIDGE PARTNERS

TECHNICAL PROPOSAL

04/19/23

REMARKS

- (A) REQUIRED NEW SIGN AND BREAKAWAY SUPPORT
- (B) REQUIRED EXIT NUMBER PANEL
- (C) REQUIRED NEW SIGN AND MOUNT AS INDICATED
- (P) REQUIRED TYPE II OVERHEAD TRUSS AND FOOTINGS
- (Q) REQUIRED OVERHEAD CANTILEVER AND FOOTING

LEGEND

- EXISTING OVERHEAD STRUCTURE
- PROPOSED OVERHEAD STRUCTURE
- PROPOSED SIGN PANEL
- PROPOSED "TYPE A" OR "TYPE B" OR
- I-10 BASELINE

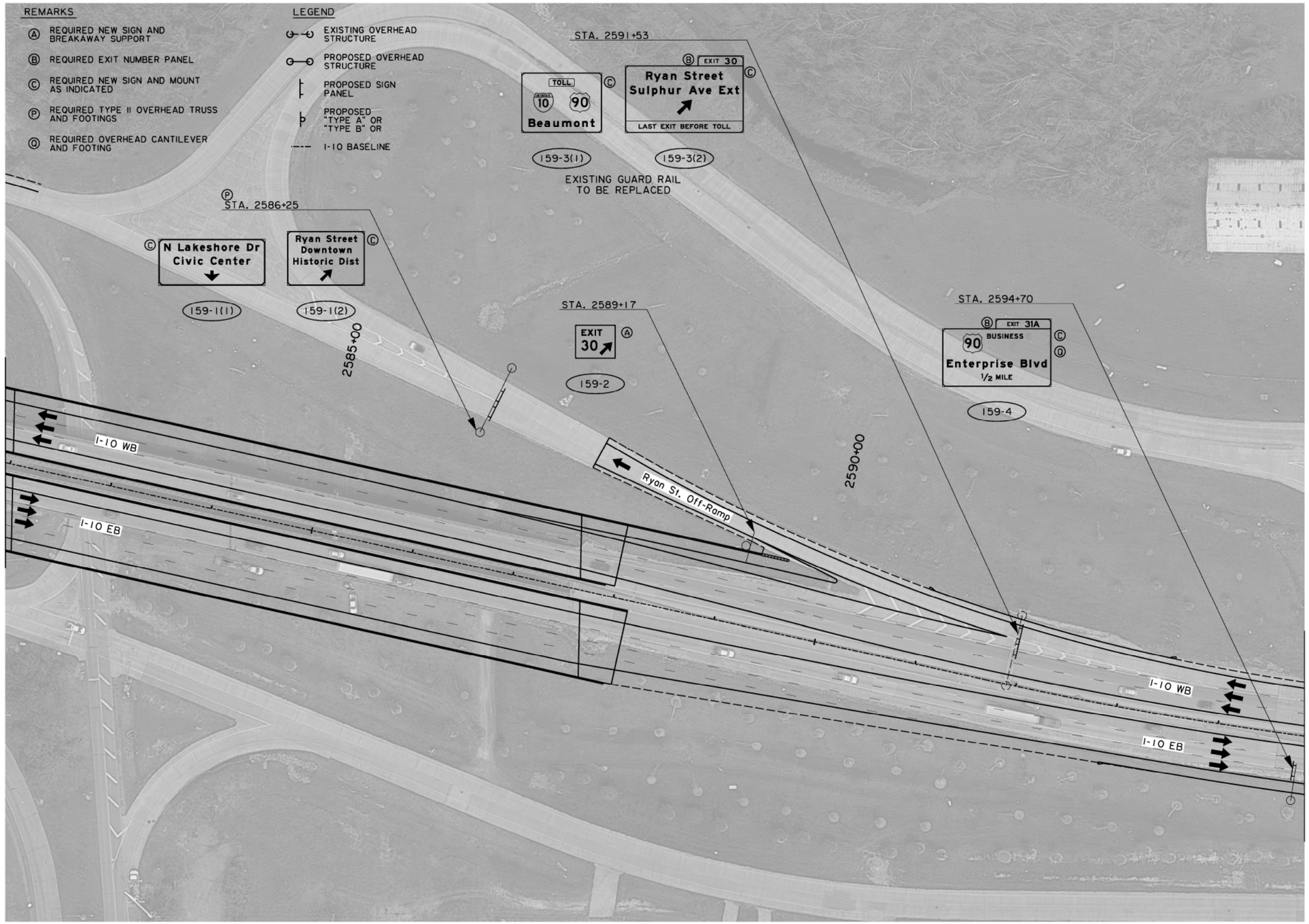

N

0 50' 100'

SCALE: 1"=100'

SHEET NUMBER	65
PARISH	CALCASIEU
CONTROL SECTION	450-91
STATE PROJECT	H.003931
DESIGN	M. AGUIRRE
CHECK	A. DEITCH
DETAIL	M. AGUIRRE
CHECK	A. DEITCH
REVIEW	
SERIES *	28 OF 33

TECHNICAL PROPOSAL
PRELIMINARY
NOT FOR CONSTRUCTION
ENGINEER:
ART DEITCH
LICENSE #:
41842
DATE:
04/19/2023

NO.	DATE	REVISION OR CHANGE ORDER DESCRIPTION	BY

PROPOSED SIGN LAYOUT

I-10 CALCASIEU RIVER BRIDGE P3

DOTD LOUISIANA DEPARTMENT OF TRANSPORTATION & DEVELOPMENT

CBP CALCASIEU BRIDGE PARTNERS

TECHNICAL PROPOSAL

04/19/23

REMARKS

Ⓐ REQUIRED NEW SIGN AND BREAKAWAY SUPPORT

LEGEND

PROPOSED "TYPE D" SIGN

PROPOSED "TYPE A" OR "TYPE B" OR

I-10 BASELINE

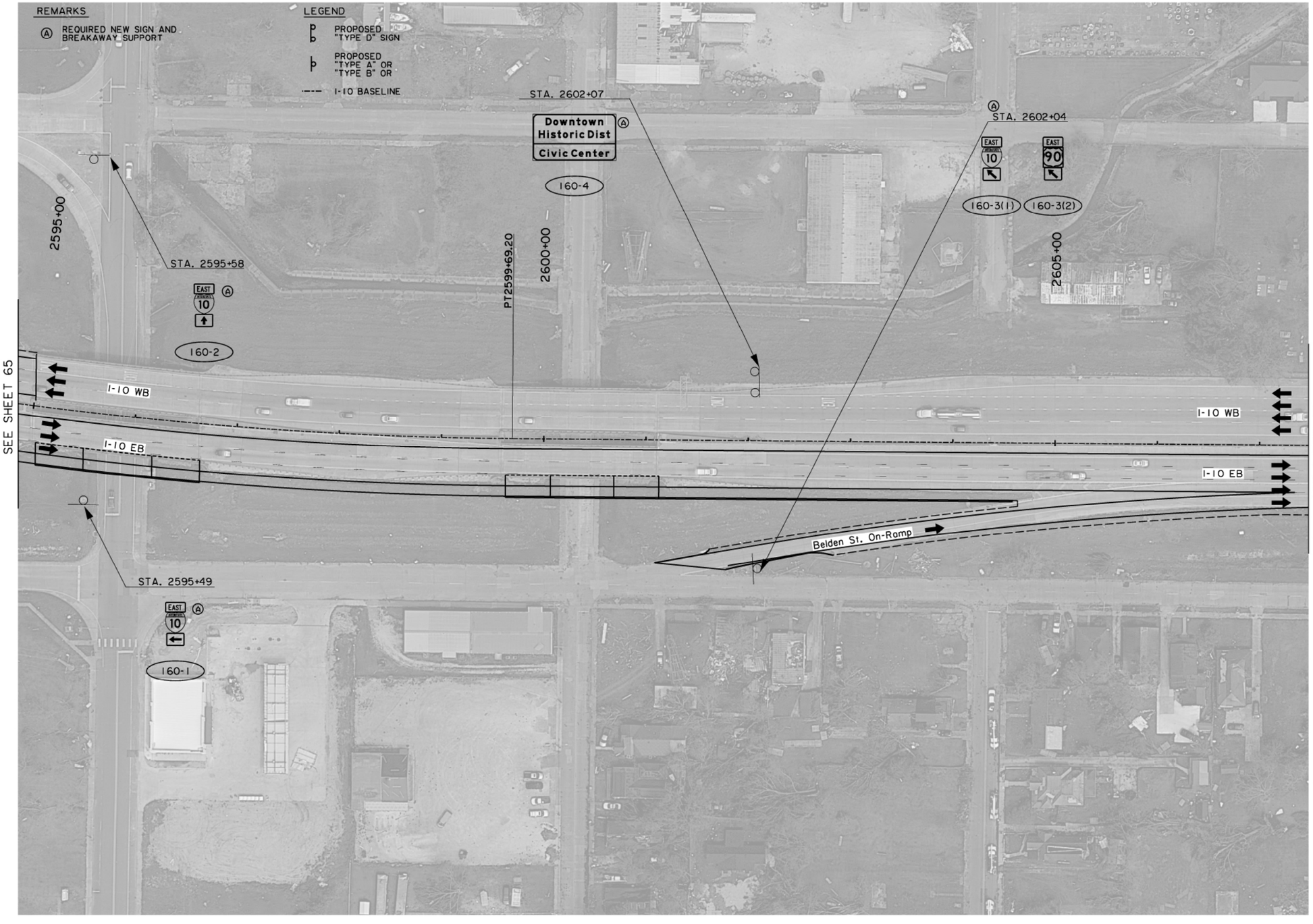

N

0 50' 100'

SCALE: 1"=100'

SHEET NUMBER	66
PARISH	CALCASIEU
CONTROL SECTION	450-91
STATE PROJECT	H.003931
DESIGN	M. AGUIRRE
CHECK	A. DEITCH
DETAIL	M. AGUIRRE
CHECK	A. DEITCH
REVIEW	
SERIES #	29 OF 33

TECHNICAL PROPOSAL

PRELIMINARY

NOT FOR CONSTRUCTION

ENGINEER: ARI DEITCH

LICENSE #: 41842

DATE: 04/19/2023

NO.	DATE	REVISION OR CHANGE ORDER DESCRIPTION	BY

PROPOSED SIGN LAYOUT

I-10 CALCASIEU RIVER BRIDGE P3

LOUISIANA DEPARTMENT OF TRANSPORTATION & DEVELOPMENT

CBP CALCASIEU BRIDGE PARTNERS

TECHNICAL PROPOSAL

04/19/23

REMARKS

- (A) REQUIRED NEW SIGN AND BREAKAWAY SUPPORT
- (B) REQUIRED EXIT NUMBER PANEL
- (C) REQUIRED NEW SIGN AND MOUNT AS INDICATED
- (J) REQUIRED MILEPOST AND 6" INCIDENTAL CONCRETE PAVING
- (O) REQUIRED STRUCTURE MOUNTED MILEPOST
- (P) REQUIRED TYPE II OVERHEAD TRUSS AND FOOTINGS
- (V) REQUIRED BARRIER MOUNT

LEGEND

- PROPOSED OVERHEAD STRUCTURE
- PROPOSED SIGN PANEL
- PROPOSED "TYPE A" OR "TYPE B" OR
- I-10 BASELINE

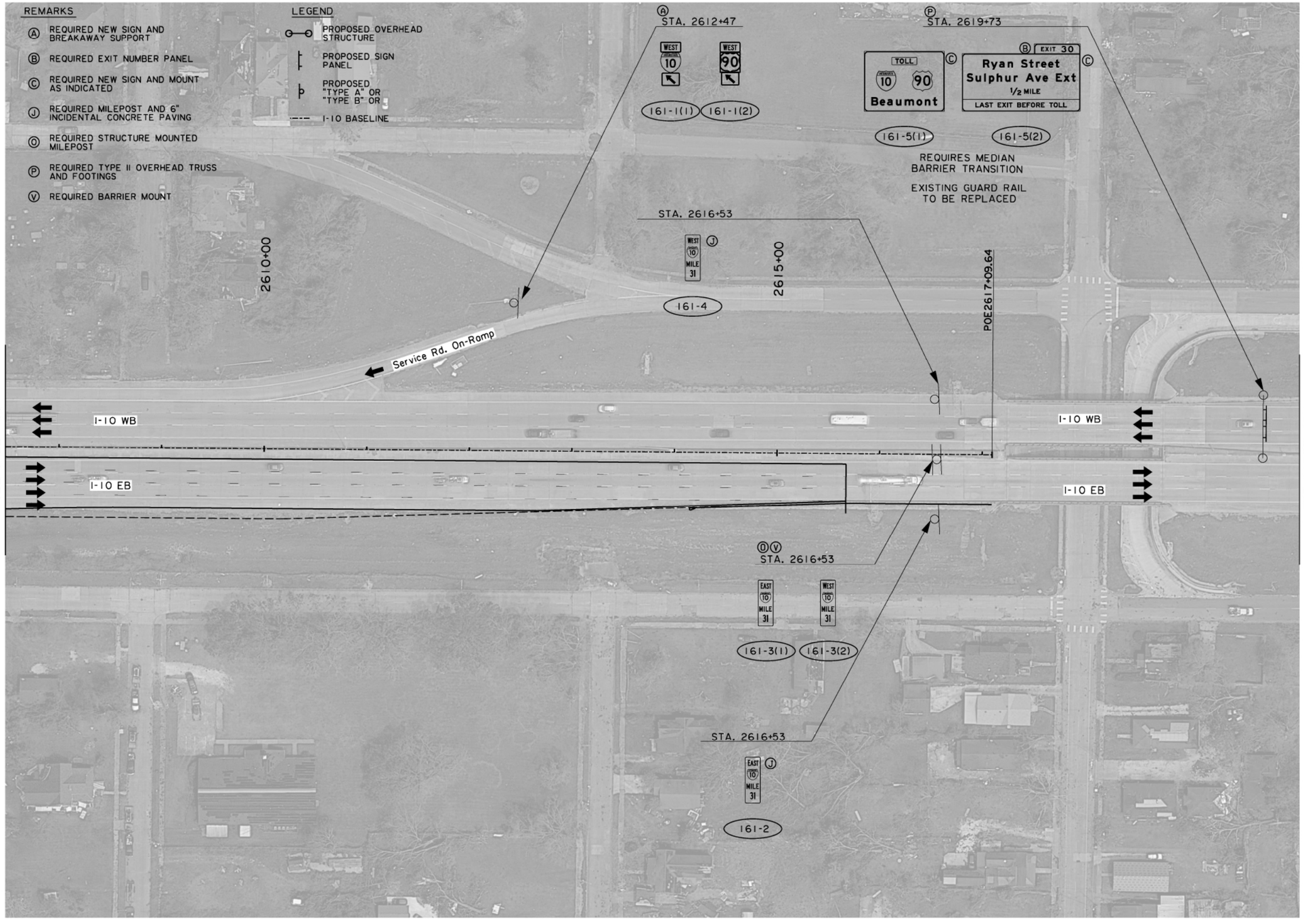

0 50' 100'

SCALE: 1"=100'

N

SHEET NUMBER	67

PARISH	CONTROL SECTION	STATE PROJECT
CALCASIEU	450-91	H.003931

DESIGN	M. AGUIRRE	DETAIL	M. AGUIRRE	REVIEW
CHECK	A. DEITCH	CHECK	A. DEITCH	SERIES # 30 OF 33

TECHNICAL PROPOSAL

PRELIMINARY
NOT FOR CONSTRUCTION

ENGINEER:
ART DEITCH

LICENSE #: 41842

DATE: 04/19/2023

NO.	DATE	REVISION OR CHANGE ORDER DESCRIPTION	BY

PROPOSED SIGN LAYOUT

I-10 CALCASIEU RIVER BRIDGE P3

DOTD LOUISIANA DEPARTMENT OF TRANSPORTATION & DEVELOPMENT

CBP CALCASIEU BRIDGE PARTNERS

TECHNICAL PROPOSAL

04/19/23

REMARKS

Ⓐ REQUIRED NEW SIGN AND BREAKAWAY SUPPORT

Ⓒ REQUIRED NEW SIGN AND MOUNT AS INDICATED

Ⓠ REQUIRED OVERHEAD CANTILEVER AND FOOTING

LEGEND

PROPOSED OVERHEAD STRUCTURE

PROPOSED SIGN PANEL

I-10 BASELINE



0 50′ 100′

SCALE: 1"=100′

N

SHEET NUMBER	68
PARISH	CALCASIEU
CONTROL SECTION	450-91
STATE PROJECT	H.003931
DESIGN	M. AGUIRRE
CHECK	A. DEITCH
DETAIL	M. AGUIRRE
CHECK	A. DEITCH
REVIEW	
SERIES #	31 OF 33

TECHNICAL PROPOSAL
PRELIMINARY
NOT FOR CONSTRUCTION
ENGINEER: ART DEITCH
LICENSE #: 41842
DATE: 04/19/2023

NO.	DATE	REVISION OR CHANGE ORDER DESCRIPTION	BY

PROPOSED SIGN LAYOUT

I-10 CALCASIEU RIVER BRIDGE P3

DOTD LOUISIANA DEPARTMENT OF TRANSPORTATION & DEVELOPMENT

CBP CALCASIEU BRIDGE PARTNERS

TECHNICAL PROPOSAL

04/19/23

LEGEND

I-10 BASELINE

Church St.

Service Rd.

Service Rd. Off-Ramp

I-10 WB

I-10 EB

Belden St. On-Ramp

Belden St.

Enterprise Blvd.

SEE SHEET 68

SEE SHEET 70

N

0 50' 100'

SCALE: 1"=100'

SHEET NUMBER	69
PARISH	CALCASIEU
CONTROL SECTION	450-91
STATE PROJECT	H.003931
DESIGN	M. AGUIRRE
CHECK	A. DEITCH
DETAIL	M. AGUIRRE
CHECK	A. DEITCH
REVIEW	
SERIES #	32 OF 33

TECHNICAL PROPOSAL

PRELIMINARY

NOT FOR CONSTRUCTION

ENGINEER:
ART DEITCH

LICENSE #:
41842

DATE:
04/19/2023

NO.	DATE	REVISION OR CHANGE ORDER DESCRIPTION	BY

PROPOSED SIGN LAYOUT

I-10 CALCASIEU RIVER BRIDGE P3

DOTD LOUISIANA DEPARTMENT OF TRANSPORTATION & DEVELOPMENT

CBP CALCASIEU BRIDGE PARTNERS

TECHNICAL PROPOSAL

04/19/23

REMARKS

Ⓐ REQUIRED NEW SIGN AND BREAKAWAY SUPPORT

Ⓑ REQUIRED EXIT NUMBER PANEL

Ⓒ REQUIRED NEW SIGN AND MOUNT AS INDICATED

Ⓓ REQUIRED OVERHEAD CANTILEVER AND FOOTING

LEGEND

EXISTING OVERHEAD STRUCTURE

PROPOSED OVERHEAD STRUCTURE

PROPOSED SIGN PANEL

PROPOSED "TYPE A" OR "TYPE B" OR

I-10 BASELINE

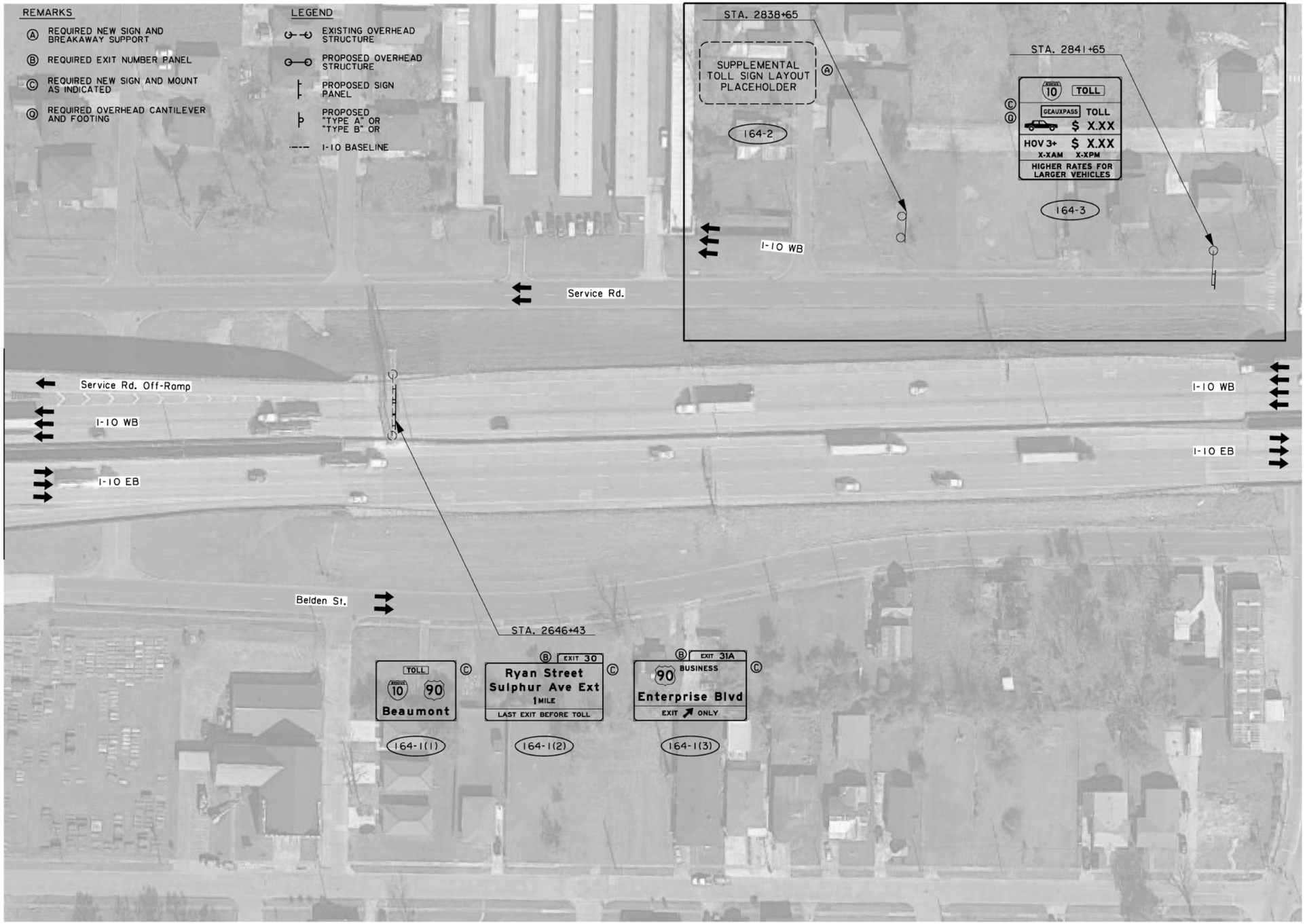

N

0 50′ 100′

SCALE: 1"=100′

SHEET NUMBER	70

PARISH	CONTROL SECTION	STATE PROJECT
CALCASIEU	450-91	H.003931

DESIGN	M. AGUIRRE
CHECK	A. DEITCH
DETAIL	M. AGUIRRE
CHECK	A. DEITCH
REVIEW	
SERIES #	33 OF 33

TECHNICAL PROPOSAL

PRELIMINARY

NOT FOR CONSTRUCTION

ENGINEER:
ART DEITCH

LICENSE #:
41842

DATE:
04/19/2023

NO.	DATE	REVISION OR CHANGE ORDER DESCRIPTION	BY

PROPOSED SIGN LAYOUT

I-10 CALCASIEU RIVER BRIDGE P3

DOTD LOUISIANA DEPARTMENT OF TRANSPORTATION & DEVELOPMENT

CBP CALCASIEU BRIDGE PARTNERS

NOTES:

1. REFER TO ROADWAY TYPICAL SECTIONS FOR RUMBLE STRIP LOCATIONS.
2. PLANS WERE DEVELOPED IN ACCORDANCE WITH THE LATEST LADOTD STANDARD PLANS AND SPECIAL DETAILS.

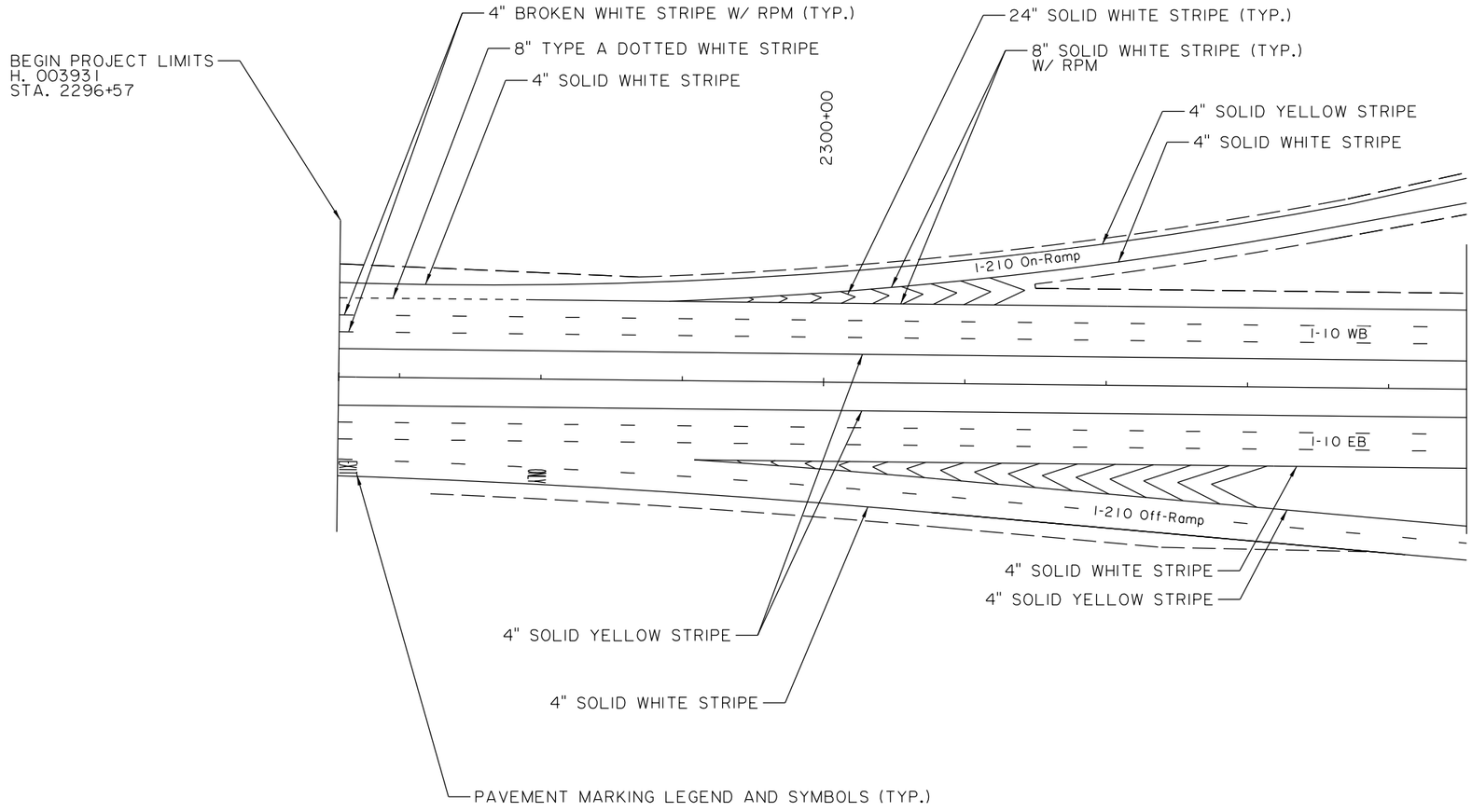

0 50' 100'
SCALE:1"=100'

TECHNICAL PROPOSAL

04/19/23

SHEET NUMBER 71

PARISH CALCASIEU
CONTROL SECTION 450-91
STATE PROJECT H.003931

DESIGN R. BENGERT
CHECK C. EVANS
DETAIL R. BENGERT
CHECK C. EVANS
REVIEW
SERIES # 1 OF 29

TECHNICAL PROPOSAL
PRELIMINARY
NOT FOR CONSTRUCTION
ENGINEER: ARI DEITCH
LICENSE #: 41842
DATE: 04/19/2023

NO.	DATE	REVISION OR CHANGE ORDER DESCRIPTION	BY

PROPOSED PAVEMENT MARKINGS

I-10 CALCASIEU RIVER BRIDGE P3

DOTD LOUISIANA DEPARTMENT OF TRANSPORTATION & DEVELOPMENT

CBP CALCASIEU BRIDGE PARTNERS

NOTES:

1. REFER TO ROADWAY TYPICAL SECTIONS FOR RUMBLE STRIP LOCATIONS.

2. PLANS WERE DEVELOPED IN ACCORDANCE WITH THE LATEST LADOTD STANDARD PLANS AND SPECIAL DETAILS.

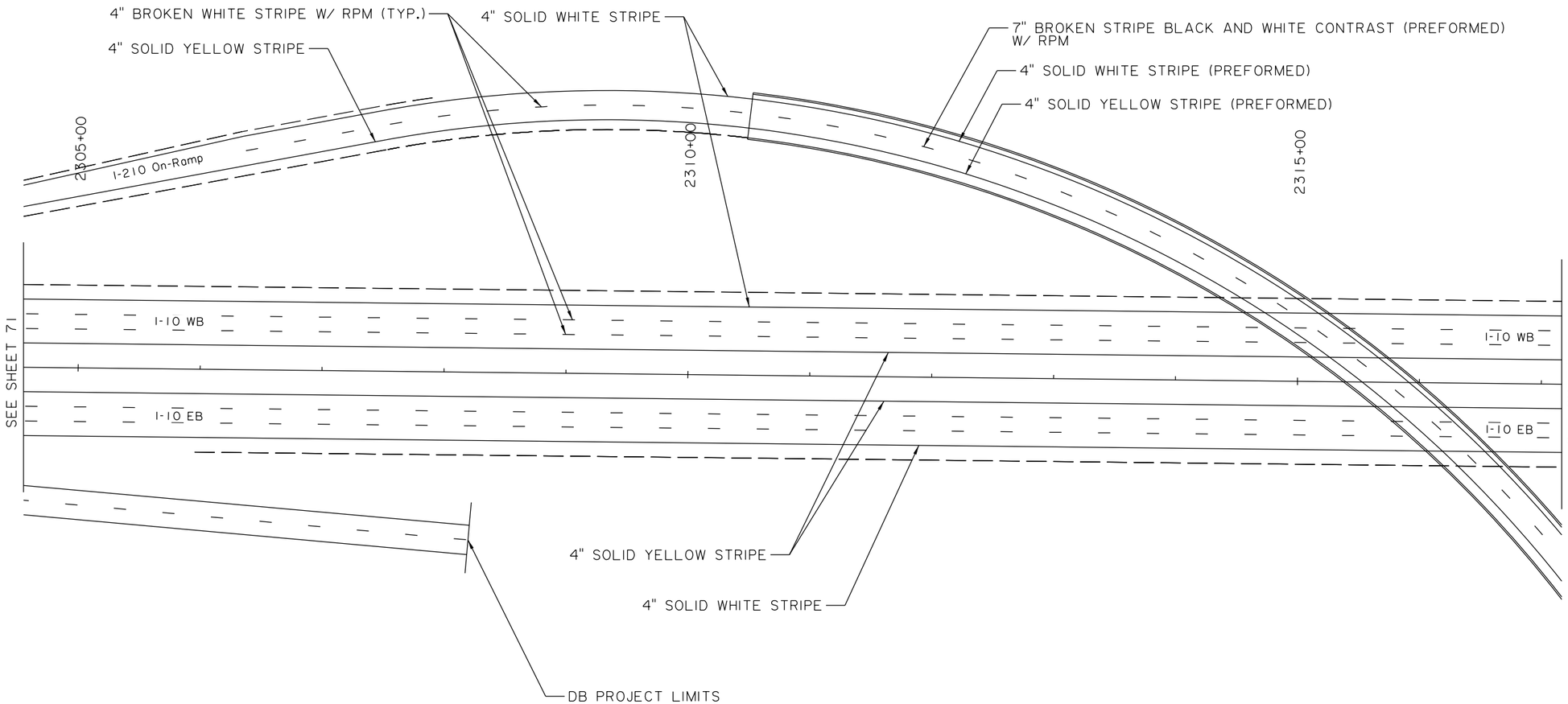

0 50' 100'

SCALE:1"=100'

TECHNICAL PROPOSAL

04/19/23

SHEET NUMBER	72
PARISH	CALCASIEU
CONTROL SECTION	450-91
STATE PROJECT	H.003931

DESIGN	R. BENGERT	DETAIL	R. BENGERT	SERIES # 2 OF 29
CHECK	C. EVANS	CHECK	C. EVANS	REVIEW

TECHNICAL PROPOSAL

PRELIMINARY
NOT FOR CONSTRUCTION

ENGINEER:
ARI DEITCH

LICENSE #:
41842

DATE:
04/19/2023

NO.	DATE	REVISION OR CHANGE ORDER DESCRIPTION	BY

PROPOSED PAVEMENT MARKINGS

I-10 CALCASIEU RIVER BRIDGE P3

LOUISIANA DEPARTMENT OF TRANSPORTATION & DEVELOPMENT

CALCASIEU BRIDGE PARTNERS

NOTES:

1. REFER TO ROADWAY TYPICAL SECTIONS FOR RUMBLE STRIP LOCATIONS.

2. PLANS WERE DEVELOPED IN ACCORDANCE WITH THE LATEST LADOTD STANDARD PLANS AND SPECIAL DETAILS.

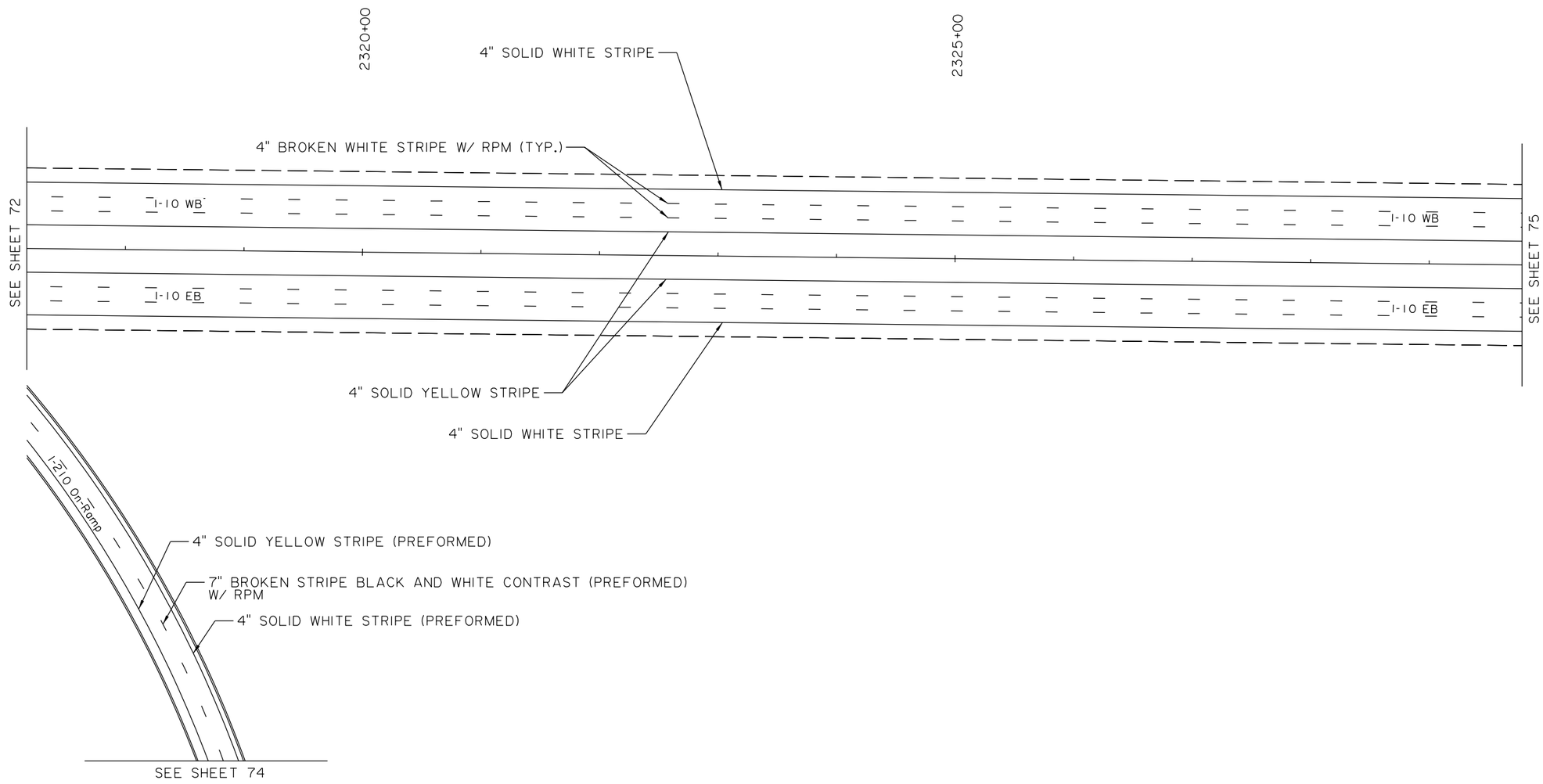

0 50' 100'

SCALE:1"=100'

TECHNICAL PROPOSAL 04/19/23

SHEET NUMBER	73
PARISH	CALCASIEU
CONTROL SECTION	450-91
STATE PROJECT	H.003931

DESIGN	R. BENGERT	DETAIL	R. BENGERT	REVIEW	SERIES # 3 OF 29
CHECK	C. EVANS	CHECK	C. EVANS		

TECHNICAL PROPOSAL

PRELIMINARY

NOT FOR CONSTRUCTION

ENGINEER: ART DEITCH

LICENSE #: 41842

DATE: 04/19/2023

NO.	DATE	REVISION OR CHANGE ORDER DESCRIPTION	BY

PROPOSED PAVEMENT MARKINGS

I-10 CALCASIEU RIVER BRIDGE P3

DOTD LOUISIANA DEPARTMENT OF TRANSPORTATION & DEVELOPMENT

CBP CALCASIEU BRIDGE PARTNERS

NOTES:

1. REFER TO ROADWAY TYPICAL SECTIONS FOR RUMBLE STRIP LOCATIONS.

2. PLANS WERE DEVELOPED IN ACCORDANCE WITH THE LATEST LADOTD STANDARD PLANS AND SPECIAL DETAILS.

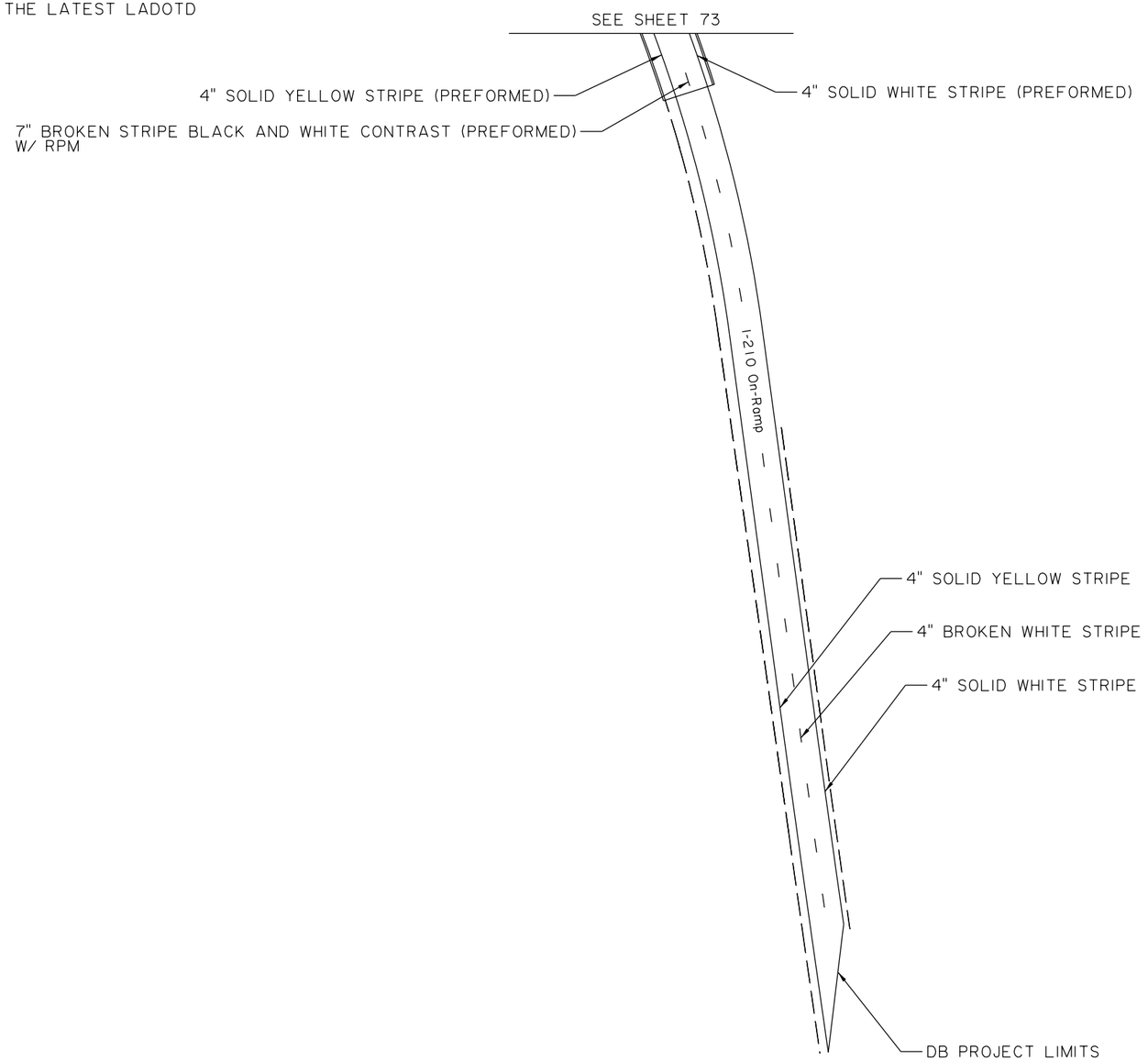

0 50' 100'

SCALE: 1"=100'

04/19/23

TECHNICAL PROPOSAL

SHEET NUMBER	74
PARISH	CALCASIEU
CONTROL SECTION	450-91
STATE PROJECT	H.003931

DESIGN	R. BENGERT	DETAIL	R. BENGERT	REVIEW
CHECK	C. EVANS	CHECK	C. EVANS	SERIES # 4 OF 29

TECHNICAL PROPOSAL

PRELIMINARY
NOT FOR CONSTRUCTION
ENGINEER: ART DEITCH
LICENSE #: 41842
DATE: 04/19/2023

NO.	DATE	REVISION OR CHANGE ORDER DESCRIPTION	BY

PROPOSED PAVEMENT MARKINGS

I-10 CALCASIEU RIVER BRIDGE P3

DOTD LOUISIANA DEPARTMENT OF TRANSPORTATION & DEVELOPMENT

CBP CALCASIEU BRIDGE PARTNERS

NOTES:

1. REFER TO ROADWAY TYPICAL SECTIONS FOR RUMBLE STRIP LOCATIONS.

2. PLANS WERE DEVELOPED IN ACCORDANCE WITH THE LATEST LADOTD STANDARD PLANS AND SPECIAL DETAILS.

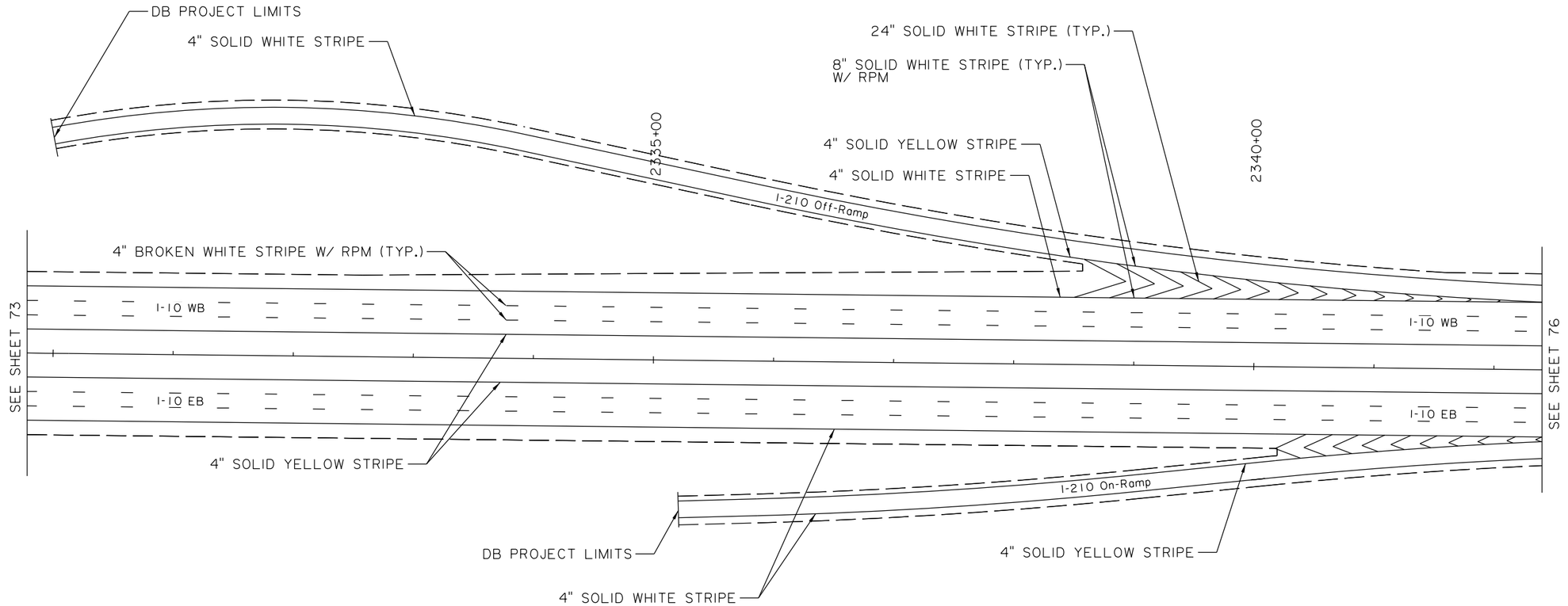

0 50' 100'

SCALE:1"=100'

04/19/23

TECHNICAL PROPOSAL

SHEET NUMBER	75
PARISH	CALCASIEU
CONTROL SECTION	450-91
STATE PROJECT	H.003931

DESIGN	R. BENGERT	DETAIL	R. BENGERT	
CHECK	C. EVANS	CHECK	C. EVANS	
REVIEW		SERIES #	5 OF 29	

TECHNICAL PROPOSAL

PRELIMINARY
NOT FOR CONSTRUCTION

ENGINEER:
ARI DEITCH

LICENSE #:
41842

DATE:
04/19/2023

NO.	DATE	REVISION OR CHANGE ORDER DESCRIPTION	BY

STATE OF LOUISIANA

PROPOSED PAVEMENT MARKINGS

I-10 CALCASIEU RIVER BRIDGE P3

DOTD
LOUISIANA DEPARTMENT OF TRANSPORTATION & DEVELOPMENT

CBP
CALCASIEU BRIDGE PARTNERS

NOTES:

1. REFER TO ROADWAY TYPICAL SECTIONS FOR RUMBLE STRIP LOCATIONS.

2. PLANS WERE DEVELOPED IN ACCORDANCE WITH THE LATEST LADOTD STANDARD PLANS AND SPECIAL DETAILS.

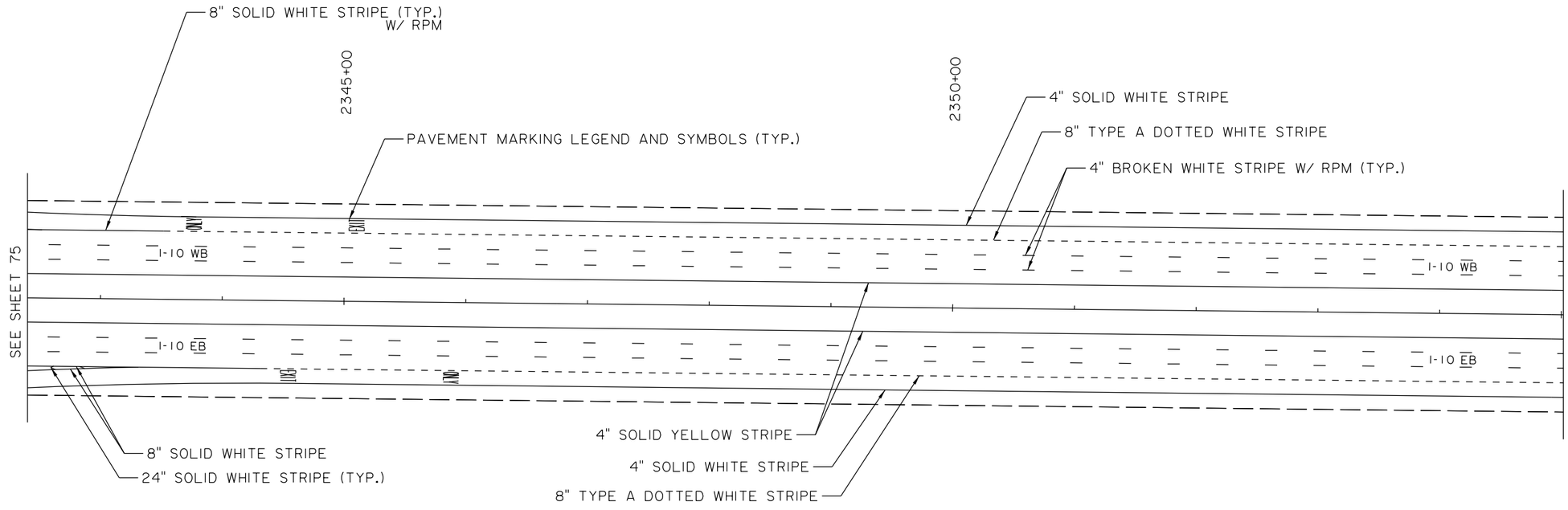

0 50' 100'

SCALE:1"=100'

N

04/19/23

TECHNICAL PROPOSAL

SHEET NUMBER	76
PARISH	CALCASIEU
CONTROL SECTION	450-91
STATE PROJECT	H.003931
DESIGN	R. BENGERT
CHECK	C. EVANS
DETAIL	R. BENGERT
CHECK	C. EVANS
REVIEW	
SERIES #	6 OF 29

TECHNICAL PROPOSAL

PRELIMINARY
NOT FOR CONSTRUCTION
ENGINEER: ART DEITCH
LICENSE #: 41842
DATE: 04/19/2023

NO.	DATE	REVISION OR CHANGE ORDER DESCRIPTION	BY

PROPOSED PAVEMENT MARKINGS

I-10 CALCASIEU RIVER BRIDGE P3

DOTD LOUISIANA DEPARTMENT OF TRANSPORTATION & DEVELOPMENT

CBP CALCASIEU BRIDGE PARTNERS

NOTES:

1. REFER TO ROADWAY TYPICAL SECTIONS FOR RUMBLE STRIP LOCATIONS.
2. PLANS WERE DEVELOPED IN ACCORDANCE WITH THE LATEST LADOTD STANDARD PLANS AND SPECIAL DETAILS.

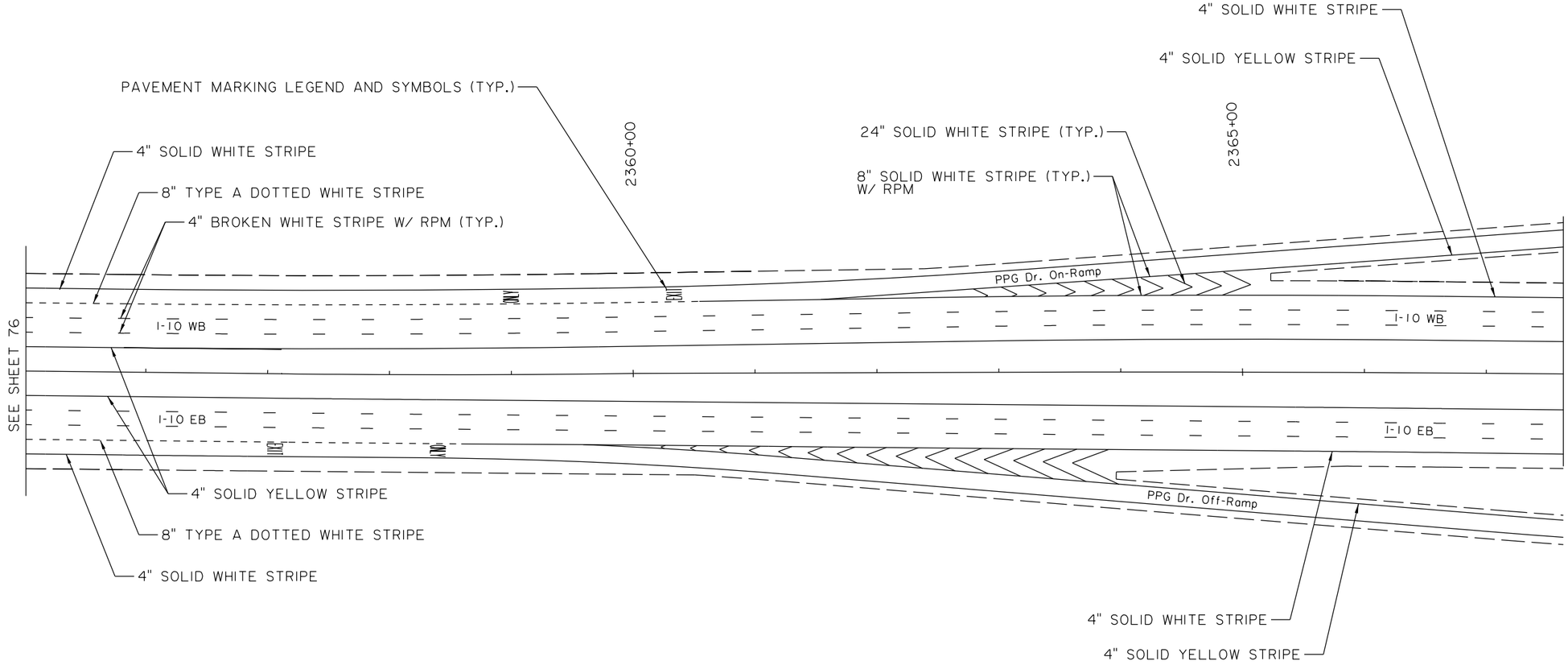

0 50' 100'
SCALE:1"=100'

TECHNICAL PROPOSAL

04/19/23

SHEET NUMBER 77

PARISH: CALCASIEU
CONTROL SECTION: 450-91
STATE PROJECT: H.003931

DESIGN: R. BENGERT
CHECK: C. EVANS
DETAIL: R. BENGERT
CHECK: C. EVANS
REVIEW
SERIES #: 7 OF 29

TECHNICAL PROPOSAL
PRELIMINARY
NOT FOR CONSTRUCTION
ENGINEER: ARI DEITCH
LICENSE #: 41842
DATE: 04/19/2023

NO.	DATE	REVISION OR CHANGE ORDER DESCRIPTION	BY

PROPOSED PAVEMENT MARKINGS

I-10 CALCASIEU RIVER BRIDGE P3

DOTD LOUISIANA DEPARTMENT OF TRANSPORTATION & DEVELOPMENT

CBP CALCASIEU BRIDGE PARTNERS

NOTES:

1. REFER TO ROADWAY TYPICAL SECTIONS FOR RUMBLE STRIP LOCATIONS.

2. PLANS WERE DEVELOPED IN ACCORDANCE WITH THE LATEST LADOTD STANDARD PLANS AND SPECIAL DETAILS.

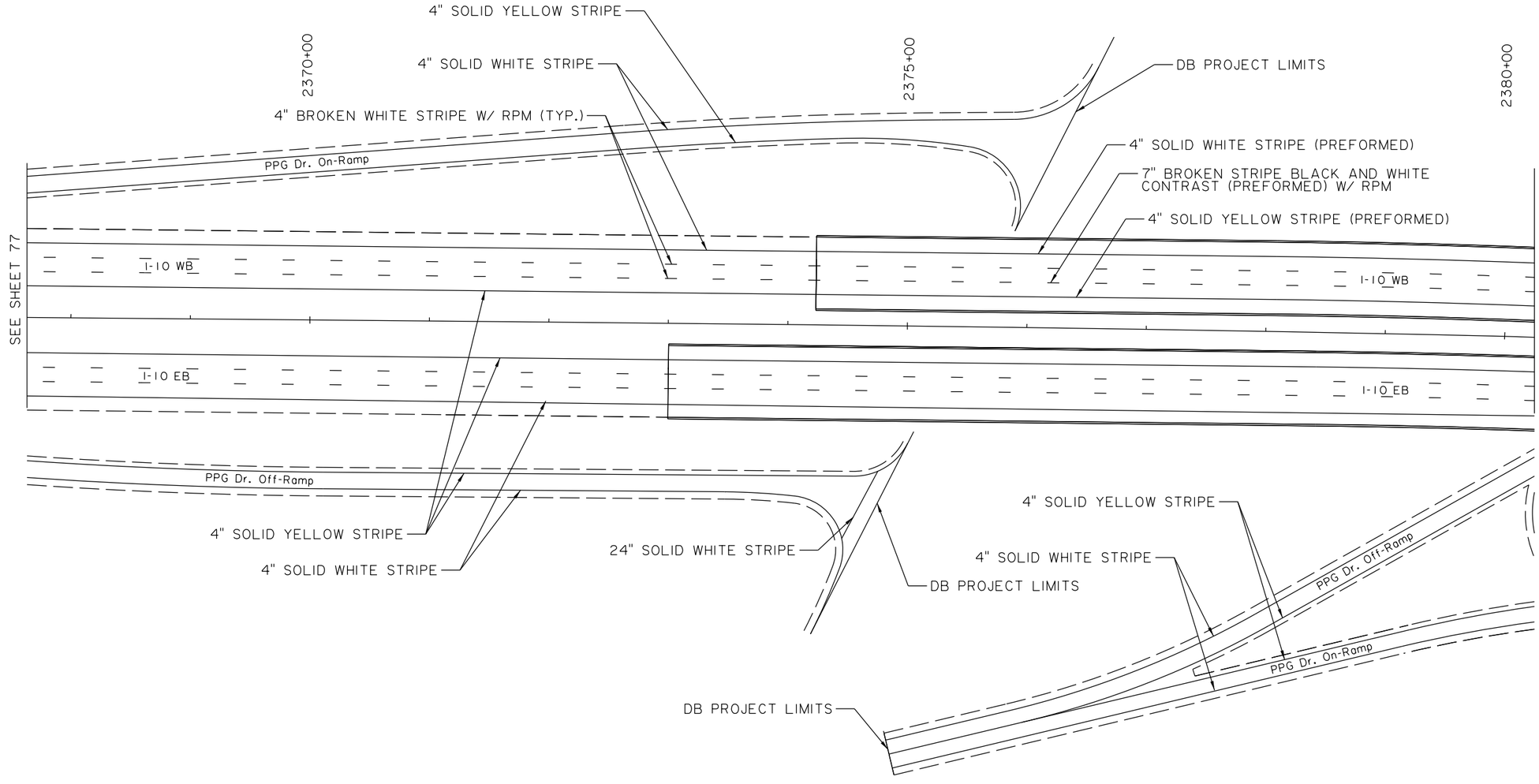

0 50' 100'

SCALE:1"=100'

04/19/23

TECHNICAL PROPOSAL

SHEET NUMBER	78
PARISH	CALCASIEU
CONTROL SECTION	450-91
STATE PROJECT	H.003931
DESIGN	R. BENGERT
CHECK	C. EVANS
DETAIL	R. BENGERT
CHECK	C. EVANS
REVIEW	
SERIES #	8 OF 29

TECHNICAL PROPOSAL

PRELIMINARY

NOT FOR CONSTRUCTION

ENGINEER: ART DEITCH

LICENSE #: 41842

DATE: 04/19/2023

NO.	DATE	REVISION OR CHANGE ORDER DESCRIPTION	BY

STATE OF LOUISIANA

PROPOSED PAVEMENT MARKINGS

I-10 CALCASIEU RIVER BRIDGE P3

DOTD LOUISIANA DEPARTMENT OF TRANSPORTATION & DEVELOPMENT

CBP CALCASIEU BRIDGE PARTNERS

NOTES:

1. REFER TO ROADWAY TYPICAL SECTIONS FOR RUMBLE STRIP LOCATIONS.

2. PLANS WERE DEVELOPED IN ACCORDANCE WITH THE LATEST LADOTD STANDARD PLANS AND SPECIAL DETAILS.

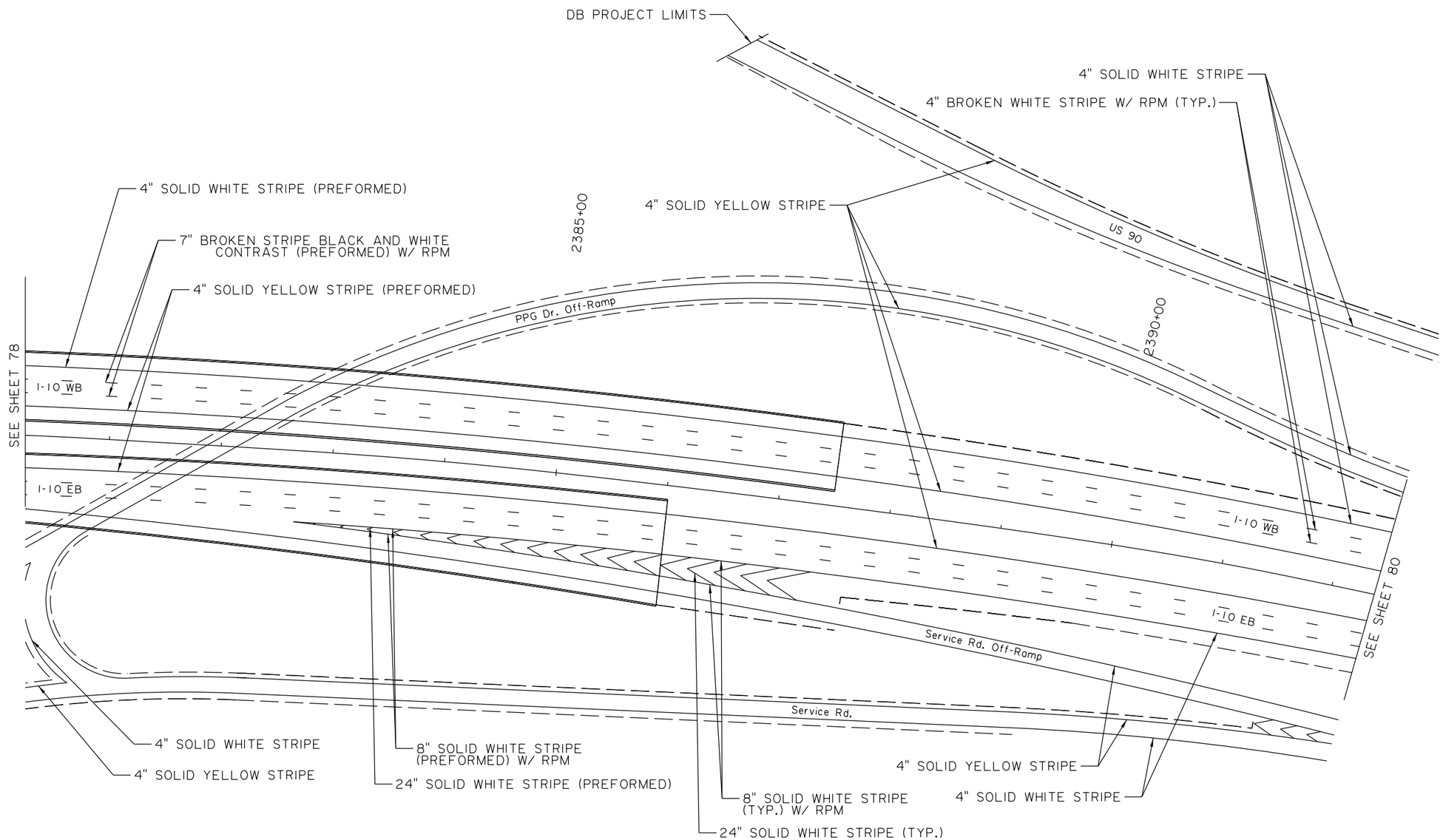

04/19/23

TECHNICAL PROPOSAL

SHEET NUMBER	79
PARISH	CALCASIEU
CONTROL SECTION	450-91
STATE PROJECT	H.003931

DESIGN	R. BENGERT
CHECK	C. EVANS
DETAIL	R. BENGERT
CHECK	C. EVANS
REVIEW	
SERIES #	9 OF 29

TECHNICAL PROPOSAL
PRELIMINARY
NOT FOR CONSTRUCTION
ENGINEER: ART DEITCH
LICENSE #: 41842
DATE: 04/19/2023

NO.	DATE	REVISION OR CHANGE ORDER DESCRIPTION	BY

PROPOSED PAVEMENT MARKINGS

I-10 CALCASIEU RIVER BRIDGE P3

DOTD LOUISIANA DEPARTMENT OF TRANSPORTATION & DEVELOPMENT

CBP CALCASIEU BRIDGE PARTNERS

NOTES:

1. REFER TO ROADWAY TYPICAL SECTIONS FOR RUMBLE STRIP LOCATIONS.

2. PLANS WERE DEVELOPED IN ACCORDANCE WITH THE LATEST LADOTD STANDARD PLANS AND SPECIAL DETAILS.

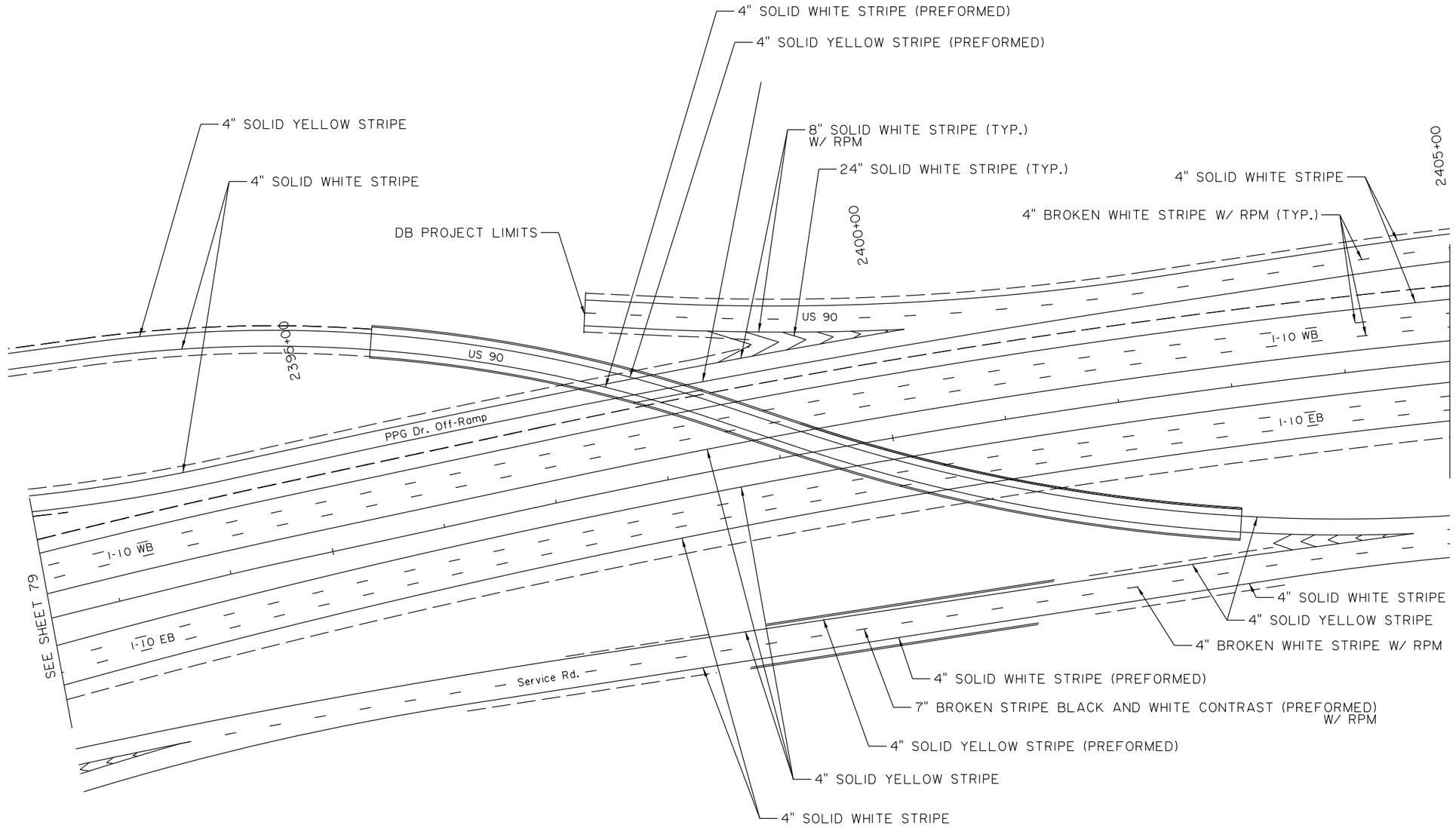

N

0 50′ 100′

SCALE:1"=100′

SHEET NUMBER	80
PARISH	CALCASIEU
CONTROL SECTION	450-91
STATE PROJECT	H.003931

DESIGN	R. BENGERT	DETAIL	R. BENGERT
CHECK	C. EVANS	CHECK	C. EVANS
REVIEW		SERIES #	10 OF 29

TECHNICAL PROPOSAL
PRELIMINARY
NOT FOR CONSTRUCTION
ENGINEER: ART DEITCH
LICENSE #: 41842
DATE: 04/19/2023

NO.	DATE	REVISION OR CHANGE ORDER DESCRIPTION	BY

PROPOSED PAVEMENT MARKINGS

I-10 CALCASIEU RIVER BRIDGE P3

LOUISIANA DEPARTMENT OF TRANSPORTATION & DEVELOPMENT

CALCASIEU BRIDGE PARTNERS

04/19/23

TECHNICAL PROPOSAL

NOTES:

1. REFER TO ROADWAY TYPICAL SECTIONS FOR RUMBLE STRIP LOCATIONS.

2. PLANS WERE DEVELOPED IN ACCORDANCE WITH THE LATEST LADOTD STANDARD PLANS AND SPECIAL DETAILS.

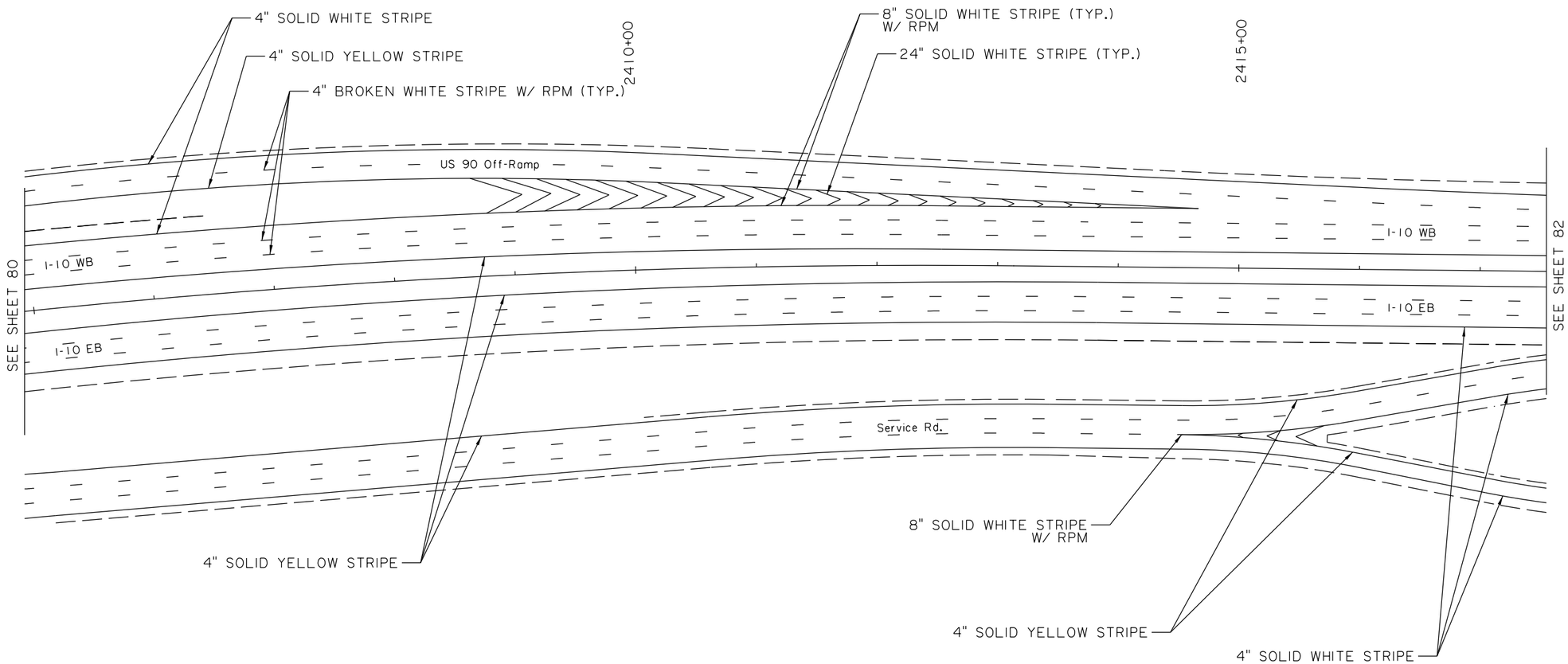

N

0 50' 100'

SCALE:1"=100'

SHEET NUMBER	81
PARISH	CALCASIEU
CONTROL SECTION	450-91
STATE PROJECT	H.003931

DESIGN	R. BENGERT	DETAIL	R. BENGERT	REVIEW	SERIES # 11 OF 29
CHECK	C. EVANS	CHECK	C. EVANS		

TECHNICAL PROPOSAL

PRELIMINARY
NOT FOR CONSTRUCTION
ENGINEER: ART DEITCH
LICENSE #: 41842
DATE: 04/19/2023

NO.	DATE	REVISION OR CHANGE ORDER DESCRIPTION	BY

PROPOSED PAVEMENT MARKINGS

I-10 CALCASIEU RIVER BRIDGE P3

LOUISIANA DEPARTMENT OF TRANSPORTATION & DEVELOPMENT

CALCASIEU BRIDGE PARTNERS

04/19/23

TECHNICAL PROPOSAL

NOTES:

1. REFER TO ROADWAY TYPICAL SECTIONS FOR RUMBLE STRIP LOCATIONS.

2. PLANS WERE DEVELOPED IN ACCORDANCE WITH THE LATEST LADOTD STANDARD PLANS AND SPECIAL DETAILS.

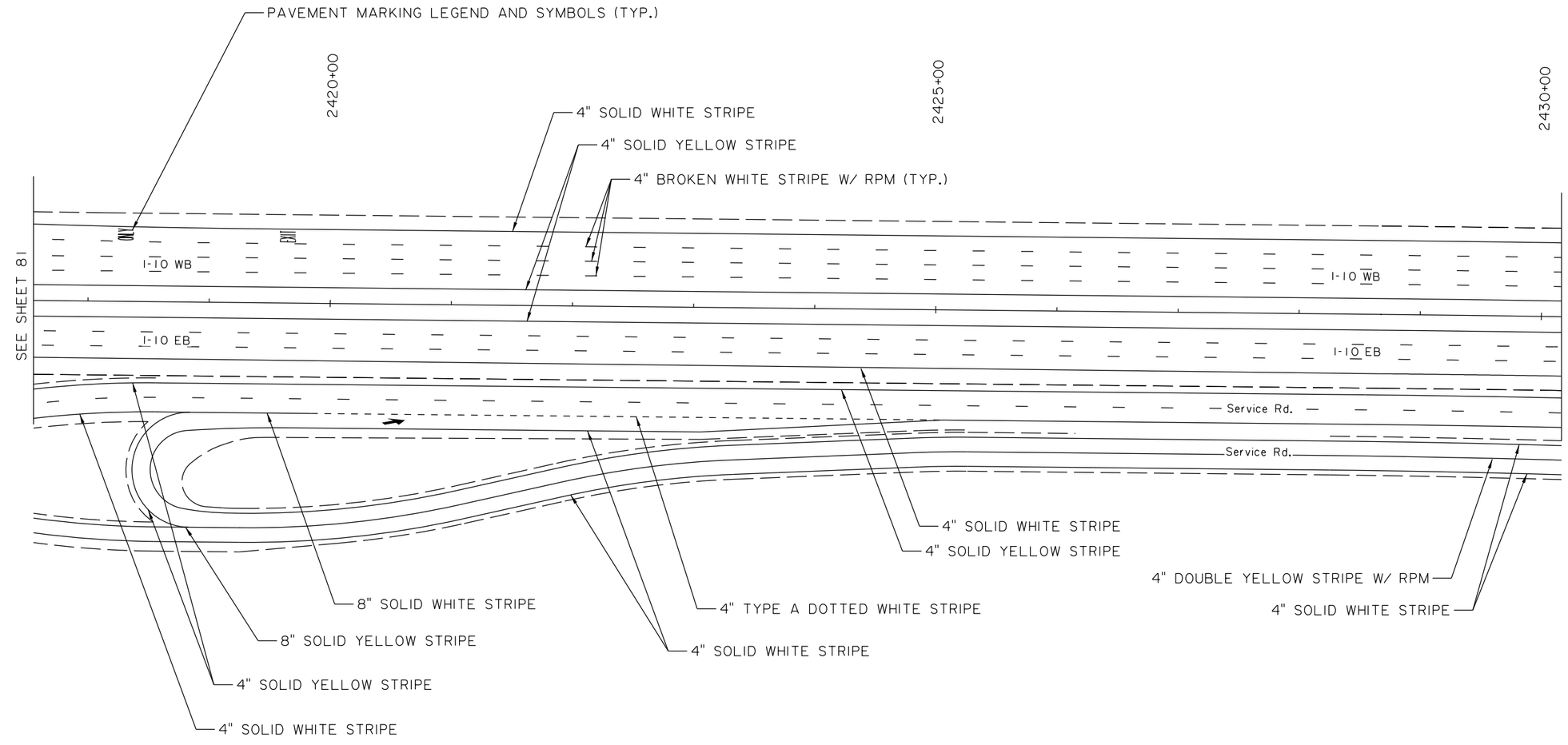

0 50' 100'

SCALE:1"=100'

N

SHEET NUMBER	82
PARISH	CALCASIEU
CONTROL SECTION	450-91
STATE PROJECT	H.003931

DESIGN	R. BENGERT	DETAIL	R. BENGERT	REVIEW	SERIES # 12 OF 29
CHECK	C. EVANS	CHECK	C. EVANS		

TECHNICAL PROPOSAL

PRELIMINARY
NOT FOR CONSTRUCTION
ENGINEER: ART DEITCH
LICENSE #: 41842
DATE: 04/19/2023

NO.	DATE	REVISION OR CHANGE ORDER DESCRIPTION	BY

PROPOSED PAVEMENT MARKINGS

I-10 CALCASIEU RIVER BRIDGE P3

LOUISIANA DEPARTMENT OF TRANSPORTATION & DEVELOPMENT

CALCASIEU BRIDGE PARTNERS

04/19/23

TECHNICAL PROPOSAL

NOTES:

1. REFER TO ROADWAY TYPICAL SECTIONS FOR RUMBLE STRIP LOCATIONS.

2. PLANS WERE DEVELOPED IN ACCORDANCE WITH THE LATEST LADOTD STANDARD PLANS AND SPECIAL DETAILS.

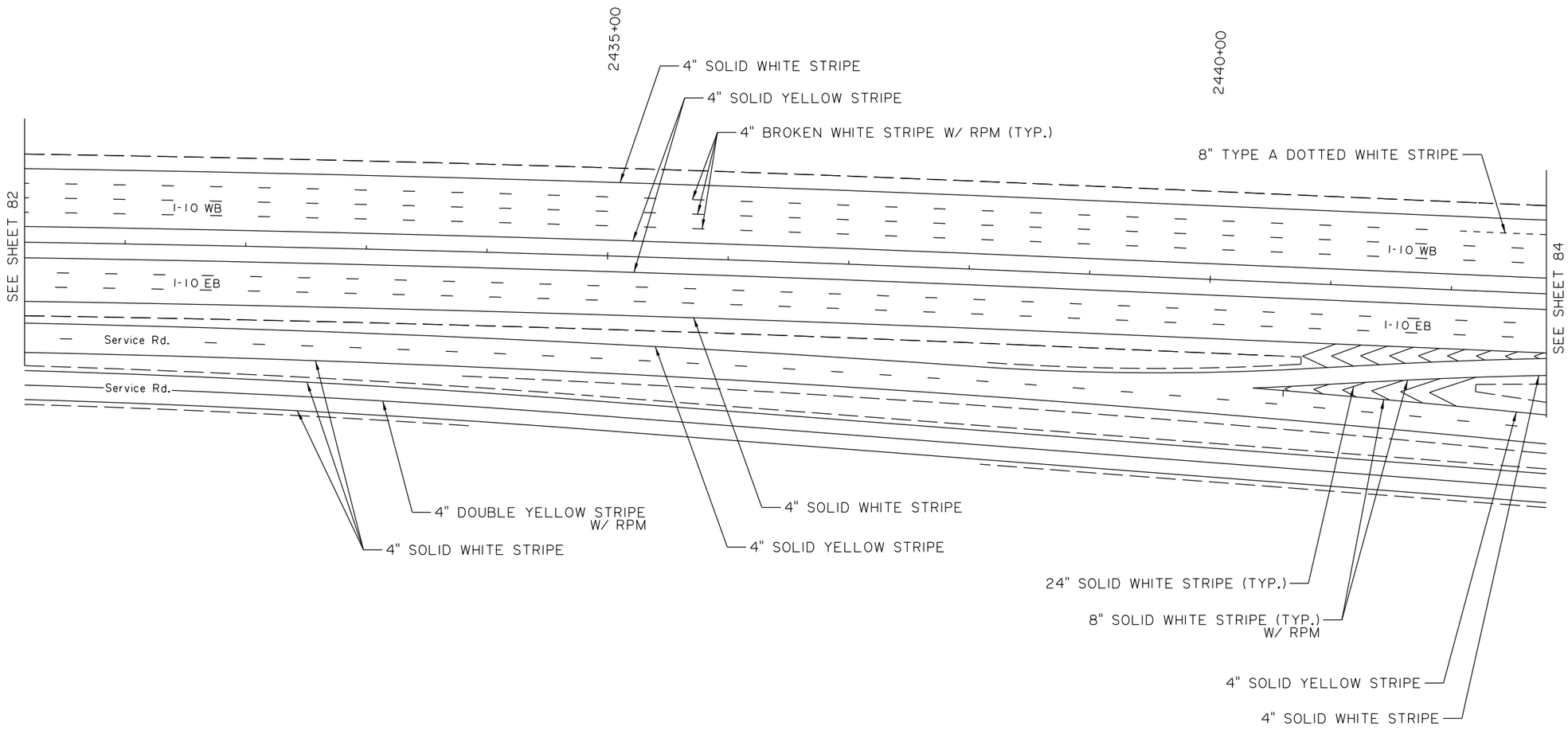

0 50′ 100′

SCALE:1"=100′

N

SHEET NUMBER 83

PARISH	CONTROL SECTION	STATE PROJECT
CALCASIEU	450-91	H.003931

	DESIGN	CHECK	DETAIL	CHECK	REVIEW	SERIES
	R. BENGERT	C. EVANS	R. BENGERT	C. EVANS		13 OF 29

TECHNICAL PROPOSAL
PRELIMINARY
NOT FOR CONSTRUCTION
ENGINEER: ART DEITCH
LICENSE #: 41842
DATE: 04/19/2023

NO.	DATE	REVISION OR CHANGE ORDER DESCRIPTION	BY

PROPOSED PAVEMENT MARKINGS

I-10 CALCASIEU RIVER BRIDGE P3

LOUISIANA DEPARTMENT OF TRANSPORTATION & DEVELOPMENT

CALCASIEU BRIDGE PARTNERS

04/19/23

TECHNICAL PROPOSAL

NOTES:

1. REFER TO ROADWAY TYPICAL SECTIONS FOR RUMBLE STRIP LOCATIONS.

2. PLANS WERE DEVELOPED IN ACCORDANCE WITH THE LATEST LADOTD STANDARD PLANS AND SPECIAL DETAILS.

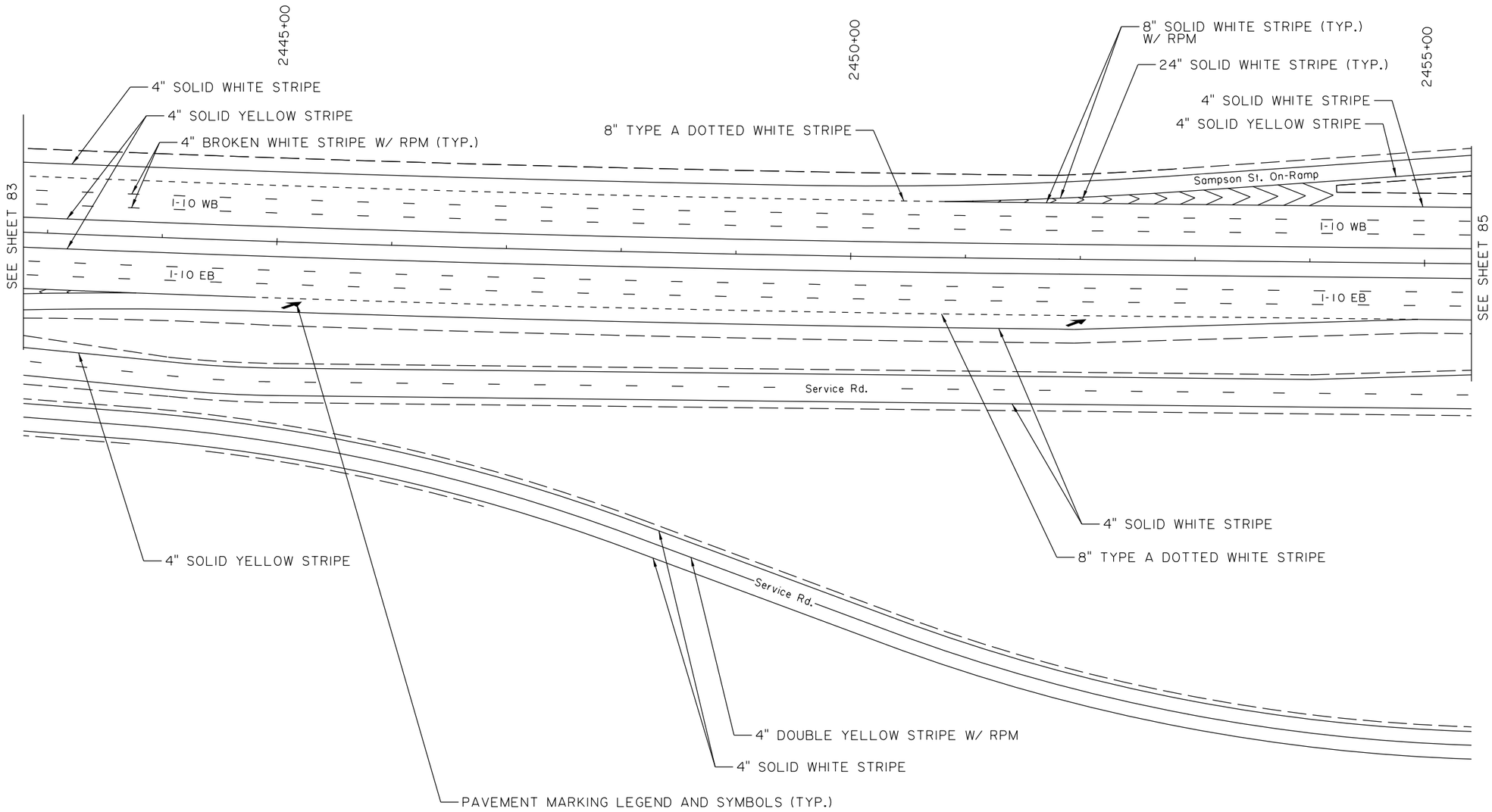

N

0 50' 100'

SCALE:1"=100'

04/19/23

TECHNICAL PROPOSAL

SHEET NUMBER	84

PARISH	CONTROL SECTION	STATE PROJECT
CALCASIEU	450-91	H.003931

DESIGN	R. BENGERT
CHECK	C. EVANS
DETAIL	R. BENGERT
CHECK	C. EVANS
REVIEW	
SERIES	14 OF 29

TECHNICAL PROPOSAL

PRELIMINARY
NOT FOR CONSTRUCTION

ENGINEER:
ART DEITCH

LICENSE #:
41842

DATE:
04/19/2023

NO.	DATE	REVISION OR CHANGE ORDER DESCRIPTION	BY

PROPOSED PAVEMENT MARKINGS

I-10 CALCASIEU RIVER BRIDGE P3

LOUISIANA DEPARTMENT OF TRANSPORTATION & DEVELOPMENT

CALCASIEU BRIDGE PARTNERS

NOTES:

1. REFER TO ROADWAY TYPICAL SECTIONS FOR RUMBLE STRIP LOCATIONS.

2. PLANS WERE DEVELOPED IN ACCORDANCE WITH THE LATEST LADOTD STANDARD PLANS AND SPECIAL DETAILS.

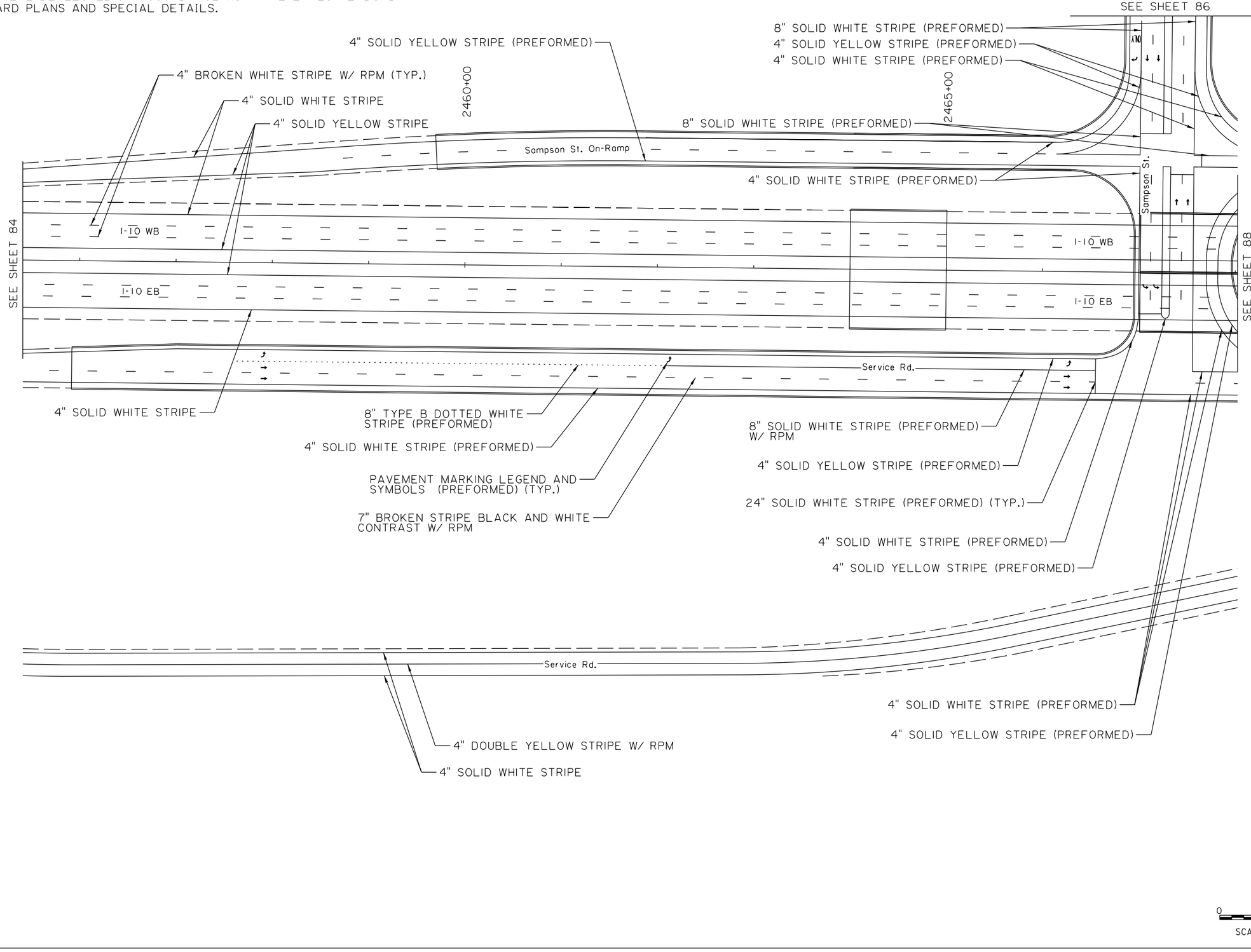

TECHNICAL PROPOSAL

04/19/23

SHEET NUMBER	85
PARISH	CALCASIEU
CONTROL SECTION	450-91
STATE PROJECT	H.003931

DESIGN	R. BENGERT	DETAIL	R. BENGERT	SERIES # 15 OF 31
CHECK	C. EVANS	CHECK	C. EVANS	
REVIEW				

TECHNICAL PROPOSAL

PRELIMINARY

NOT FOR CONSTRUCTION

ENGINEER: ART DEITCH

LICENSE #: 41842

DATE: 04/19/2023

NO.	DATE	REVISION OR CHANGE ORDER DESCRIPTION	BY

PROPOSED PAVEMENT MARKINGS

I-10 CALCASIEU RIVER BRIDGE P3

DOTD LOUISIANA DEPARTMENT OF TRANSPORTATION & DEVELOPMENT

CBP CALCASIEU BRIDGE PARTNERS

NOTES:

1. REFER TO ROADWAY TYPICAL SECTIONS FOR RUMBLE STRIP LOCATIONS.

2. PLANS WERE DEVELOPED IN ACCORDANCE WITH THE LATEST LADOTD STANDARD PLANS AND SPECIAL DETAILS.

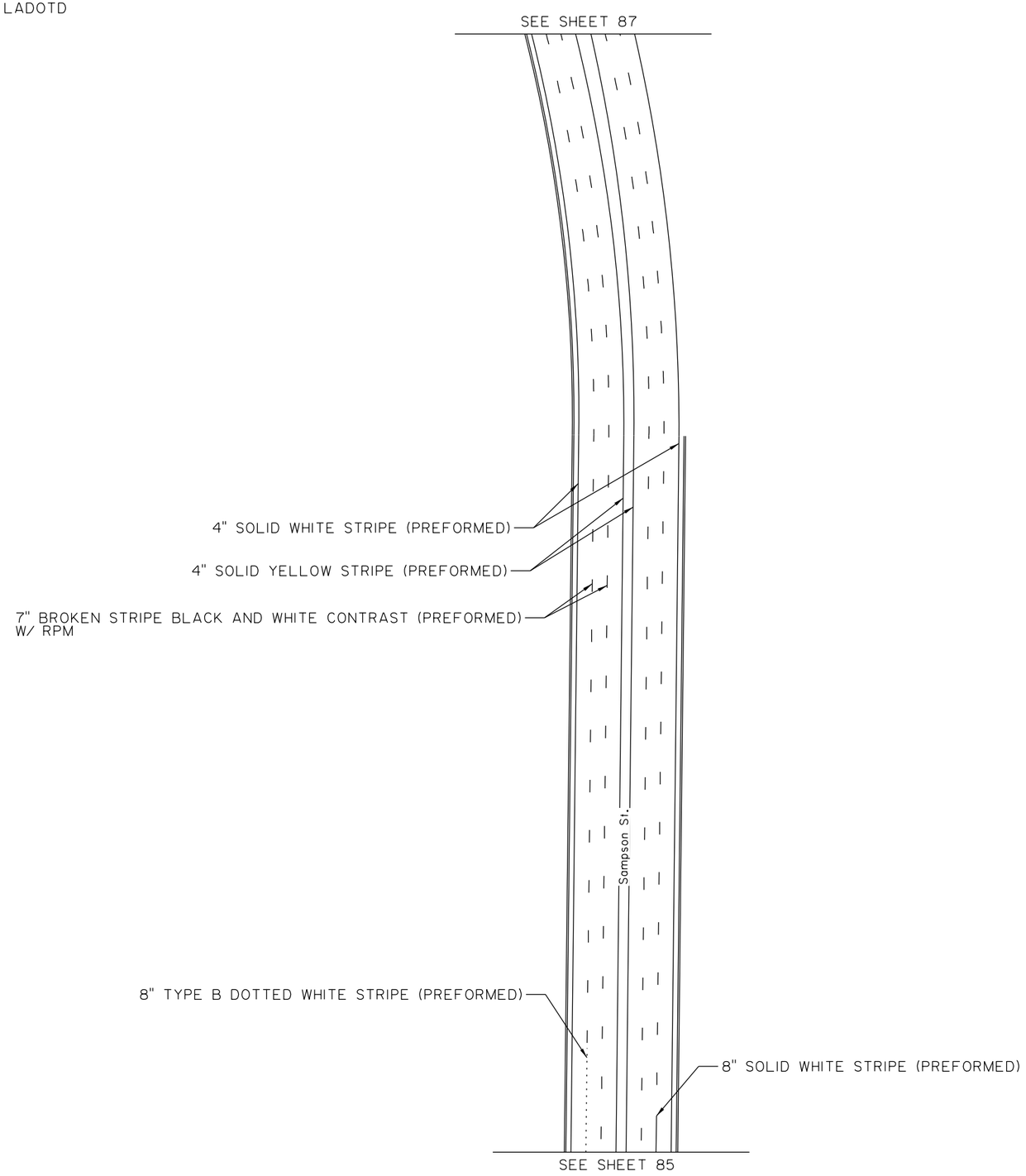

N

0 50' 100'

SCALE: 1"=100'

04/19/23

TECHNICAL PROPOSAL

SHEET NUMBER	86
PARISH	CALCASIEU
CONTROL SECTION	450-91
STATE PROJECT	H.003931

	DESIGN	CHECK	DETAIL	CHECK	REVIEW	SERIES
	R. BENGERT	C. EVANS	R. BENGERT	C. EVANS		16 OF 29

TECHNICAL PROPOSAL

PRELIMINARY

NOT FOR CONSTRUCTION

ENGINEER: ART DEITCH

LICENSE #: 41842

DATE: 04/19/2023

NO.	DATE	REVISION OR CHANGE ORDER DESCRIPTION	BY

PROPOSED PAVEMENT MARKINGS

I-10 CALCASIEU RIVER BRIDGE P3

LOUISIANA DEPARTMENT OF TRANSPORTATION & DEVELOPMENT

CALCASIEU BRIDGE PARTNERS

NOTES:

1. REFER TO ROADWAY TYPICAL SECTIONS FOR RUMBLE STRIP LOCATIONS.

2. PLANS WERE DEVELOPED IN ACCORDANCE WITH THE LATEST LADOTD STANDARD PLANS AND SPECIAL DETAILS.

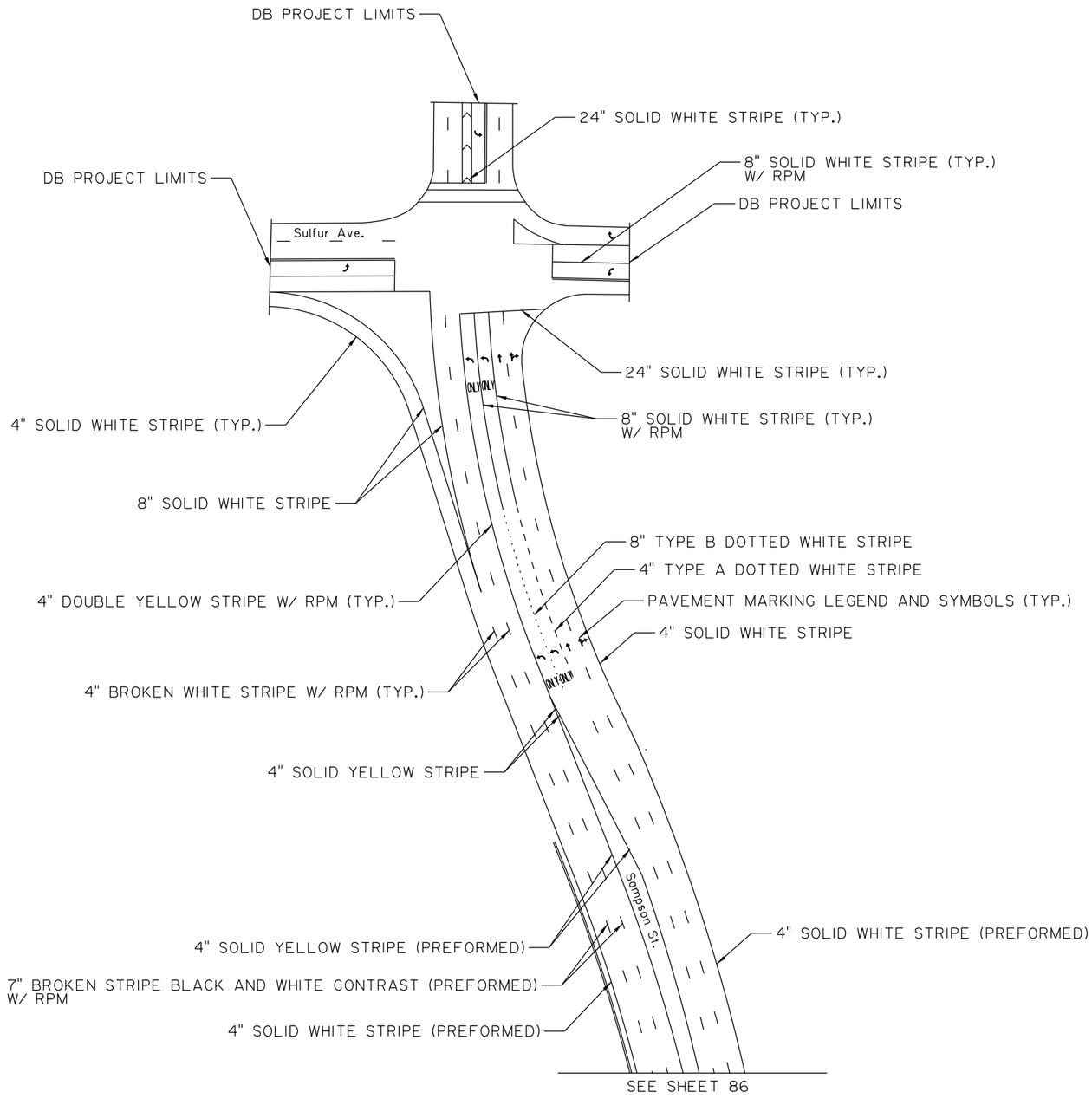

0 50′ 100′

SCALE:1"=100′

N

04/19/23

TECHNICAL PROPOSAL

SHEET NUMBER 87

PARISH	CONTROL SECTION	STATE PROJECT
CALCASIEU	450-91	H.003931

DESIGN	CHECK	DETAIL	CHECK	REVIEW	SERIES
R. BENGERT	C. EVANS	R. BENGERT	C. EVANS		17 OF 29

TECHNICAL PROPOSAL

PRELIMINARY
NOT FOR CONSTRUCTION
ENGINEER: ART DEITCH
LICENSE #: 41842
DATE: 04/19/2023

NO.	DATE	REVISION OR CHANGE ORDER DESCRIPTION	BY

PROPOSED PAVEMENT MARKINGS

I-10 CALCASIEU RIVER BRIDGE P3

DOTD LOUISIANA DEPARTMENT OF TRANSPORTATION & DEVELOPMENT

CBP CALCASIEU BRIDGE PARTNERS

NOTES:

1. REFER TO ROADWAY TYPICAL SECTIONS FOR RUMBLE STRIP LOCATIONS.

2. PLANS WERE DEVELOPED IN ACCORDANCE WITH THE LATEST LADOTD STANDARD PLANS AND SPECIAL DETAILS.

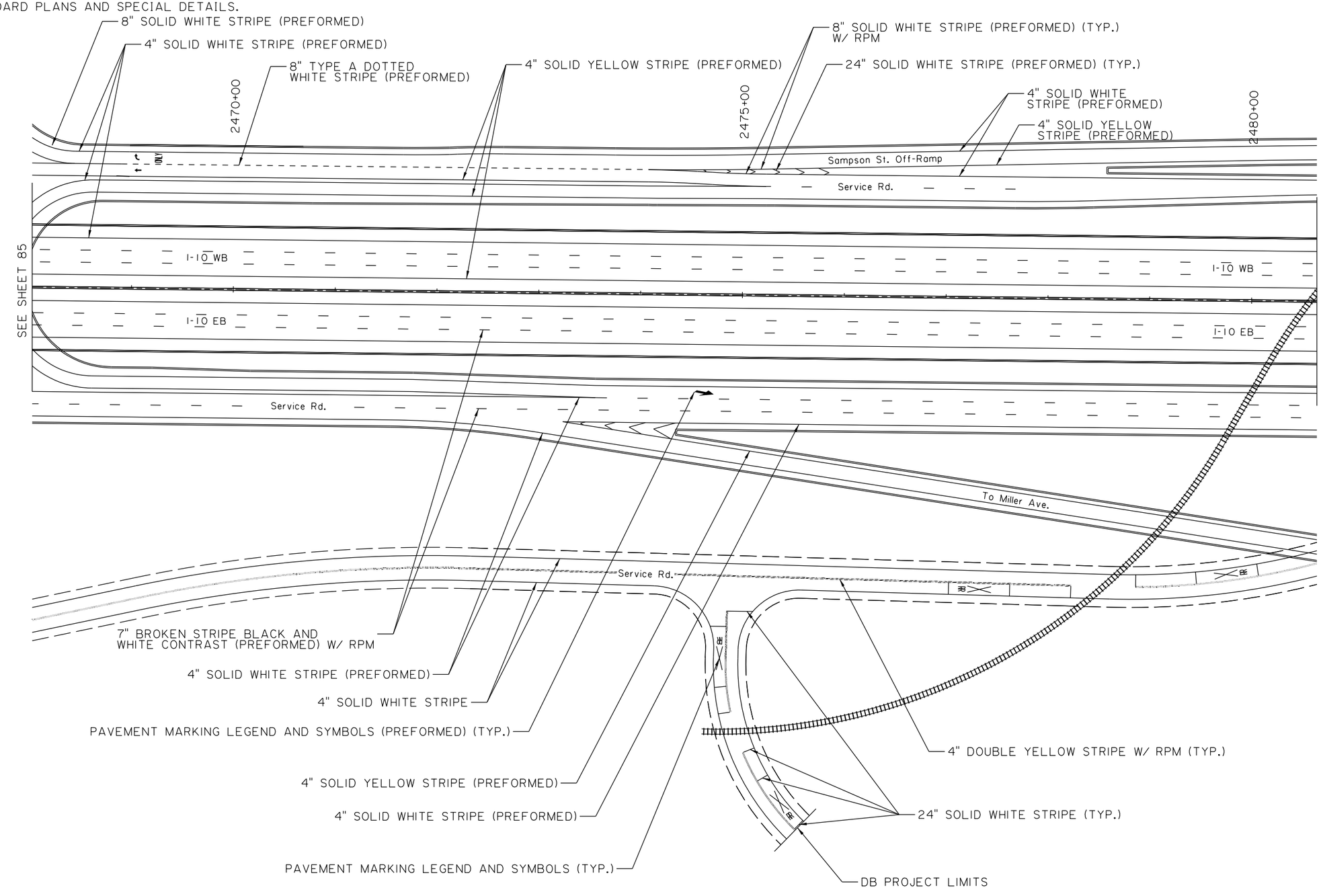

TECHNICAL PROPOSAL

04/19/23

SHEET NUMBER	88
PARISH	CALCASIEU
CONTROL SECTION	450-91
STATE PROJECT	H.003931
DESIGN	R. BENGERT
CHECK	C. EVANS
DETAIL	R. BENGERT
CHECK	C. EVANS
REVIEW	
SERIES #	18 OF 29

TECHNICAL PROPOSAL

PRELIMINARY
NOT FOR CONSTRUCTION
ENGINEER: ART DEITCH
LICENSE #: 41842
DATE: 04/19/2023

NO.	DATE	REVISION OR CHANGE ORDER DESCRIPTION	BY

PROPOSED PAVEMENT MARKINGS

I-10 CALCASIEU RIVER BRIDGE P3

DOTD LOUISIANA DEPARTMENT OF TRANSPORTATION & DEVELOPMENT

CBP CALCASIEU BRIDGE PARTNERS

NOTES:

1. REFER TO ROADWAY TYPICAL SECTIONS FOR RUMBLE STRIP LOCATIONS.

2. PLANS WERE DEVELOPED IN ACCORDANCE WITH THE LATEST LADOTD STANDARD PLANS AND SPECIAL DETAILS.

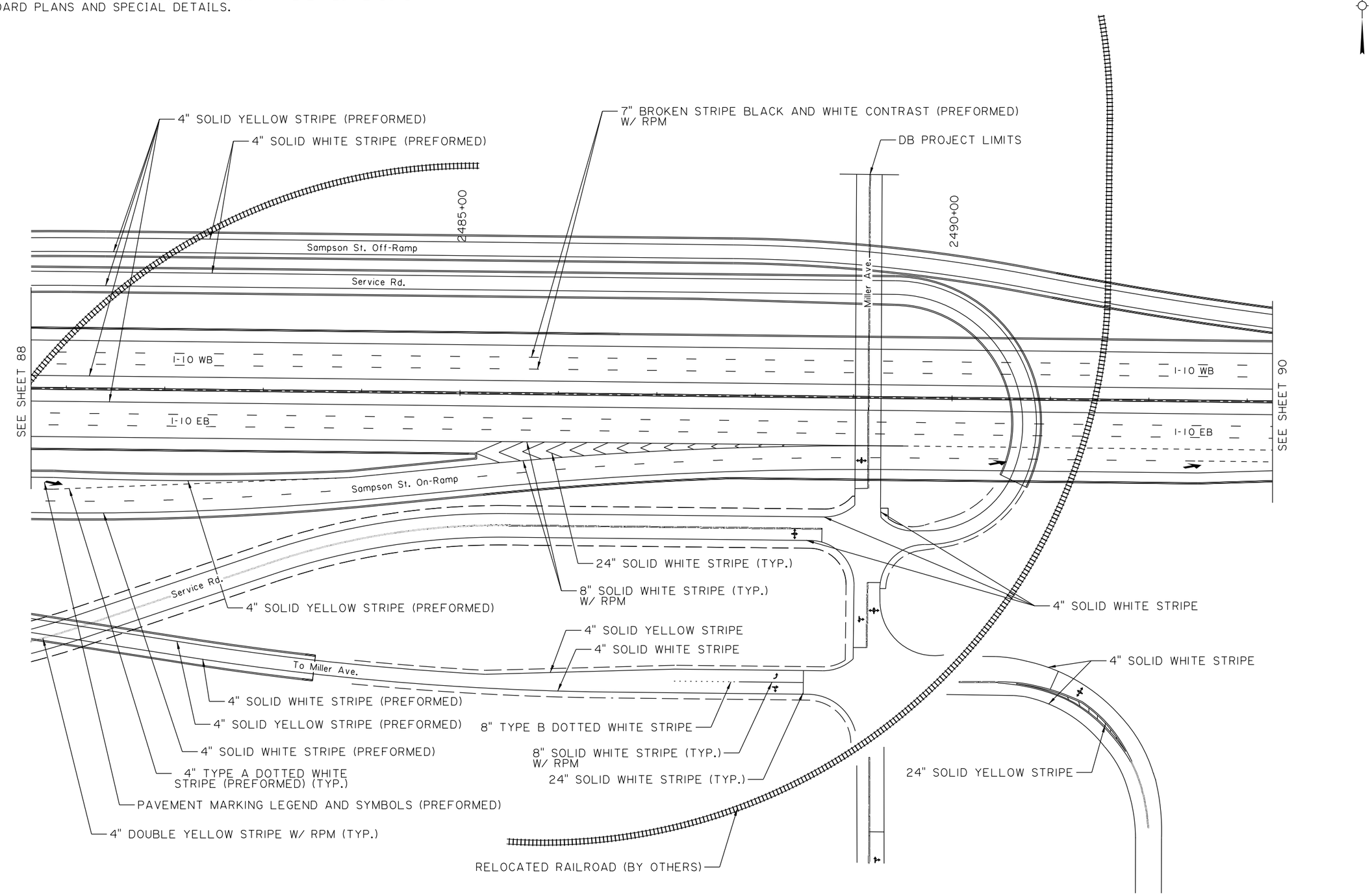

TECHNICAL PROPOSAL 04/19/23

SHEET NUMBER	89

PARISH	CONTROL SECTION	STATE PROJECT
CALCASIEU	450-91	H.003931

DESIGN	CHECK	DETAIL	CHECK	REVIEW	SERIES
R. BENGERT	C. EVANS	R. BENGERT	C. EVANS		19 OF 29

TECHNICAL PROPOSAL

PRELIMINARY
NOT FOR CONSTRUCTION

ENGINEER:
ARI DEITCH

LICENSE #:
41842

DATE:
04/19/2023

NO.	DATE	REVISION OR CHANGE ORDER DESCRIPTION	BY

PROPOSED PAVEMENT MARKINGS

I-10 CALCASIEU RIVER BRIDGE P3

LOUISIANA DEPARTMENT OF TRANSPORTATION & DEVELOPMENT

CALCASIEU BRIDGE PARTNERS

NOTES:

1. REFER TO ROADWAY TYPICAL SECTIONS FOR RUMBLE STRIP LOCATIONS.

2. PLANS WERE DEVELOPED IN ACCORDANCE WITH THE LATEST LADOTD STANDARD PLANS AND SPECIAL DETAILS.

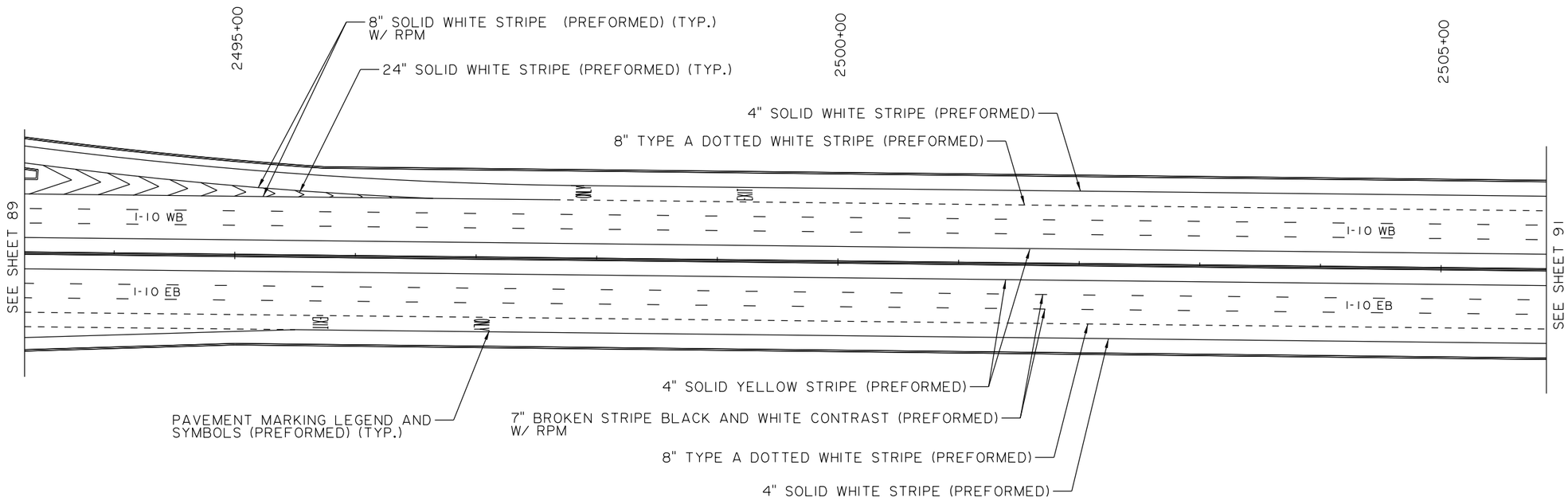

0 50' 100'

SCALE:1"=100'

N

SHEET NUMBER 90

PARISH	CONTROL SECTION	STATE PROJECT
CALCASIEU	450-91	H.003931

	DESIGN	CHECK	DETAIL	CHECK	REVIEW	SERIES
	R. BENGERT	C. EVANS	R. BENGERT	C. EVANS		20 OF 29

TECHNICAL PROPOSAL

PRELIMINARY
NOT FOR CONSTRUCTION
ENGINEER: ART DEITCH
LICENSE #: 41842
DATE: 04/19/2023

NO.	DATE	REVISION OR CHANGE ORDER DESCRIPTION	BY

PROPOSED PAVEMENT MARKINGS

I-10 CALCASIEU RIVER BRIDGE P3

LOUISIANA DEPARTMENT OF TRANSPORTATION & DEVELOPMENT

CALCASIEU BRIDGE PARTNERS

04/19/23

TECHNICAL PROPOSAL

NOTES:

1. REFER TO ROADWAY TYPICAL SECTIONS FOR RUMBLE STRIP LOCATIONS.

2. PLANS WERE DEVELOPED IN ACCORDANCE WITH THE LATEST LADOTD STANDARD PLANS AND SPECIAL DETAILS.

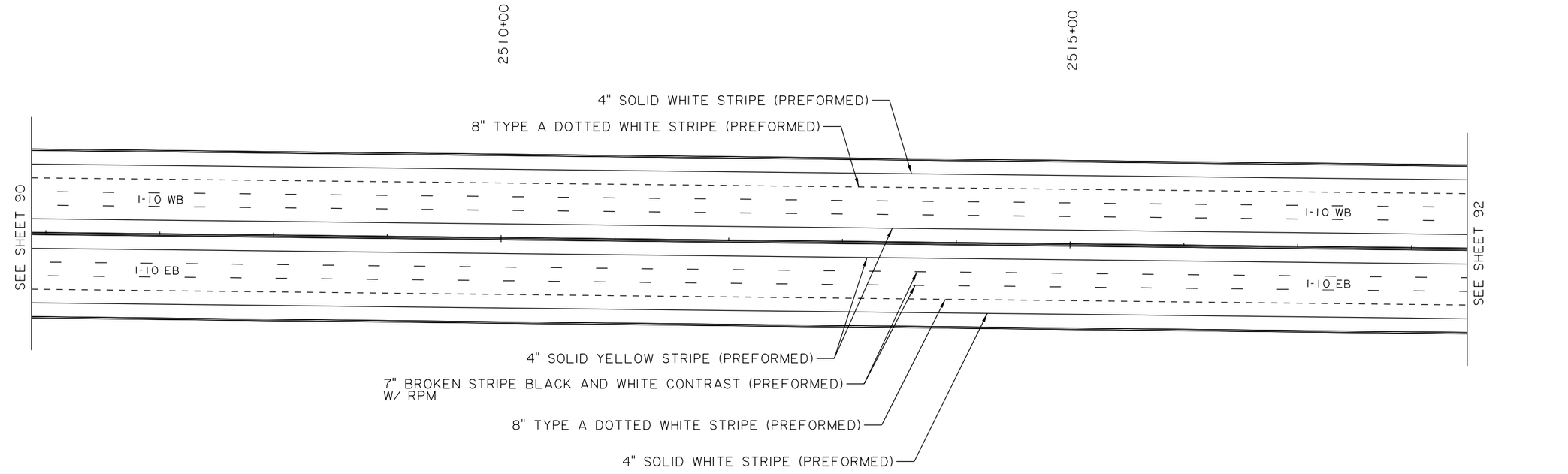

N

0 50' 100'

SCALE:1"=100'

04/19/23

TECHNICAL PROPOSAL

SHEET NUMBER	91
PARISH	CALCASIEU
CONTROL SECTION	450-91
STATE PROJECT	H.003931
DESIGN	R. BENGERT
CHECK	C. EVANS
DETAIL	R. BENGERT
CHECK	C. EVANS
REVIEW	
SERIES #	21 OF 29

TECHNICAL PROPOSAL
PRELIMINARY
NOT FOR CONSTRUCTION
ENGINEER: ART DEITCH
LICENSE #: 41842
DATE: 04/19/2023

NO.	DATE	REVISION OR CHANGE ORDER DESCRIPTION	BY

PROPOSED PAVEMENT MARKINGS

I-10 CALCASIEU RIVER BRIDGE P3

LOUISIANA DEPARTMENT OF TRANSPORTATION & DEVELOPMENT

CALCASIEU BRIDGE PARTNERS

NOTES:

1. REFER TO ROADWAY TYPICAL SECTIONS FOR RUMBLE STRIP LOCATIONS.

2. PLANS WERE DEVELOPED IN ACCORDANCE WITH THE LATEST LADOTD STANDARD PLANS AND SPECIAL DETAILS.

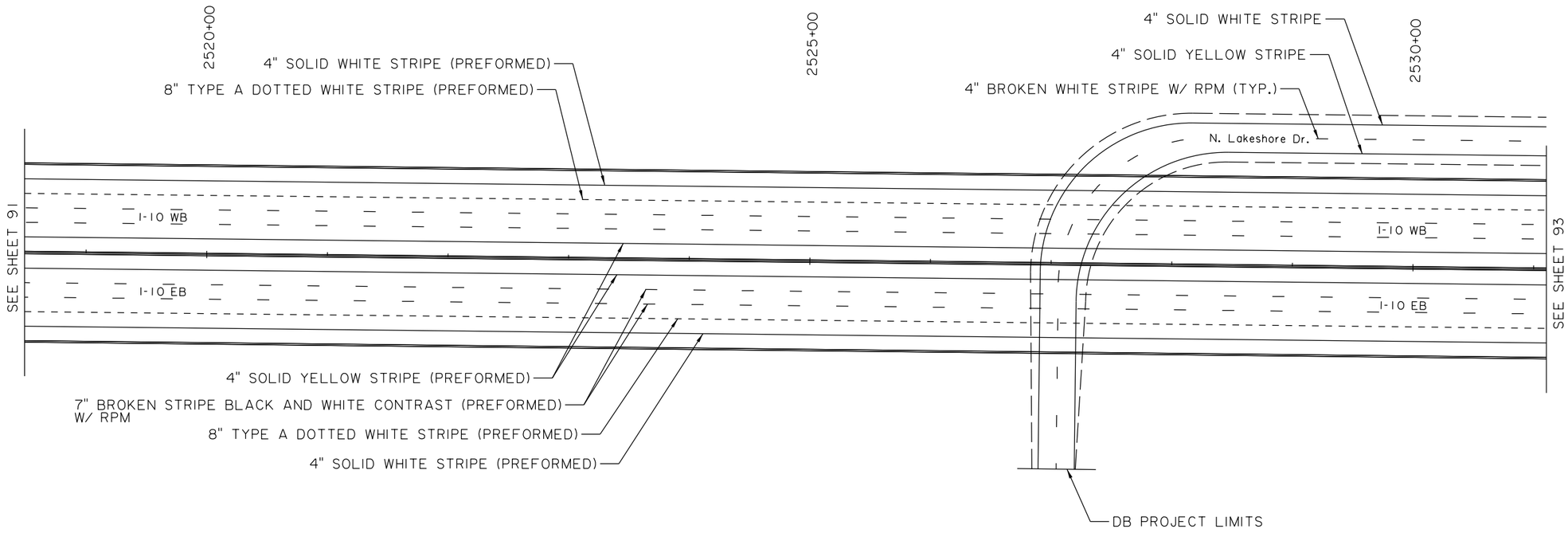

N

0 50' 100'

SCALE:1"=100'

04/19/23

TECHNICAL PROPOSAL

SHEET NUMBER	92
PARISH	CALCASIEU
CONTROL SECTION	450-91
STATE PROJECT	H.003931

DESIGN	R. BENGERT	DETAIL	R. BENGERT	
CHECK	C. EVANS	CHECK	C. EVANS	
REVIEW		SERIES #	22 OF 29	

TECHNICAL PROPOSAL
PRELIMINARY
NOT FOR CONSTRUCTION
ENGINEER: ART DEITCH
LICENSE #: 41842
DATE: 04/19/2023

NO.	DATE	REVISION OR CHANGE ORDER DESCRIPTION	BY

PROPOSED PAVEMENT MARKINGS

I-10 CALCASIEU RIVER BRIDGE P3

LOUISIANA DEPARTMENT OF TRANSPORTATION & DEVELOPMENT

CALCASIEU BRIDGE PARTNERS

NOTES:

1. REFER TO ROADWAY TYPICAL SECTIONS FOR RUMBLE STRIP LOCATIONS.

2. PLANS WERE DEVELOPED IN ACCORDANCE WITH THE LATEST LADOTD STANDARD PLANS AND SPECIAL DETAILS.

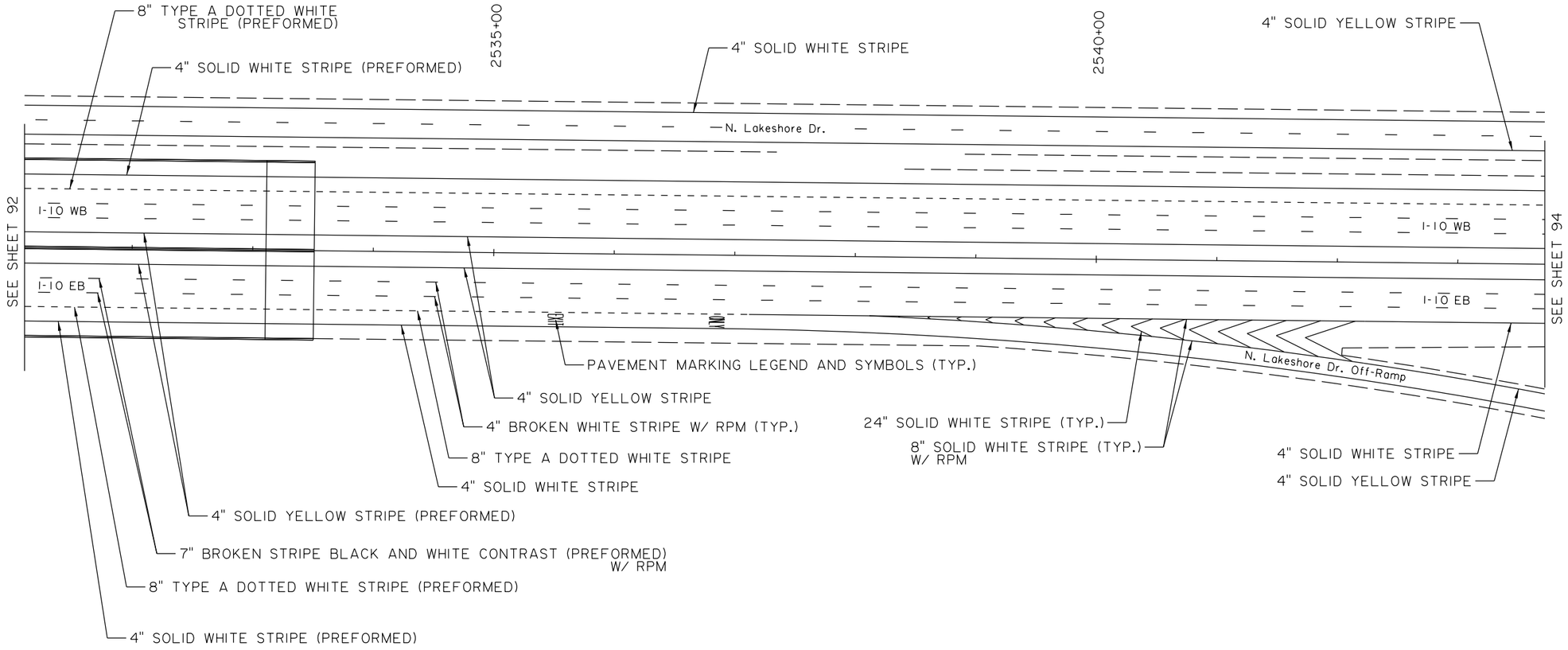

N

0 50' 100'

SCALE: 1"=100'

TECHNICAL PROPOSAL 04/19/23

SHEET NUMBER	93
PARISH	CALCASIEU
CONTROL SECTION	450-91
STATE PROJECT	H.003931

DESIGN	R. BENGERT	DETAIL	R. BENGERT	REVIEW	SERIES # 23 OF 29
CHECK	C. EVANS	CHECK	C. EVANS		

TECHNICAL PROPOSAL

PRELIMINARY
NOT FOR CONSTRUCTION
ENGINEER: ART DEITCH
LICENSE #: 41842
DATE: 04/19/2023

NO.	DATE	REVISION OR CHANGE ORDER DESCRIPTION	BY

PROPOSED PAVEMENT MARKINGS

I-10 CALCASIEU RIVER BRIDGE P3

DOTD LOUISIANA DEPARTMENT OF TRANSPORTATION & DEVELOPMENT

CBP CALCASIEU BRIDGE PARTNERS

NOTES:

1. REFER TO ROADWAY TYPICAL SECTIONS FOR RUMBLE STRIP LOCATIONS.

2. PLANS WERE DEVELOPED IN ACCORDANCE WITH THE LATEST LADOTD STANDARD PLANS AND SPECIAL DETAILS.

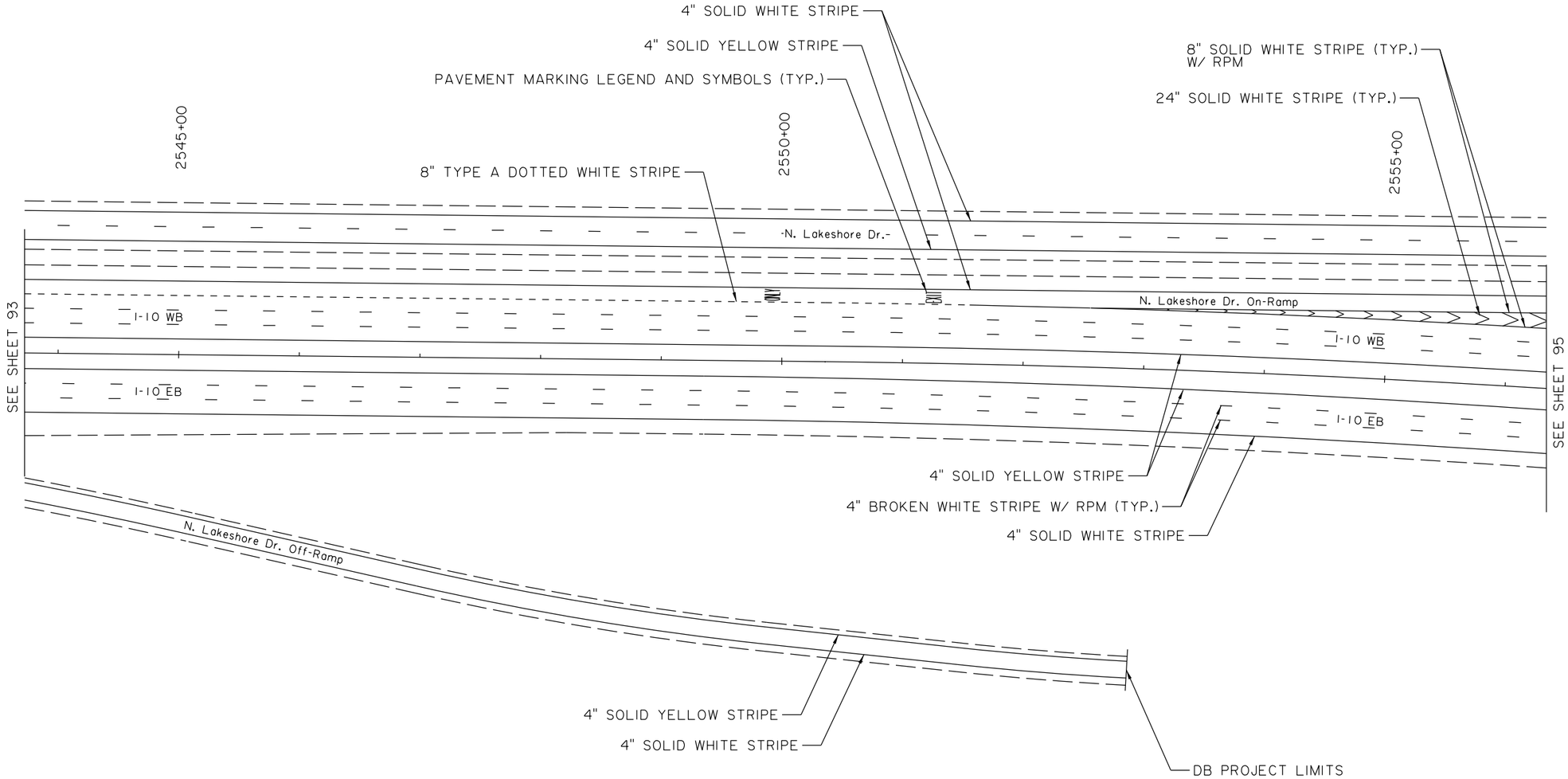

0 50' 100'

SCALE: 1"=100'

N

SHEET NUMBER	94
PARISH	CALCASIEU
CONTROL SECTION	450-91
STATE PROJECT	H.003931

DESIGN	R. BENGERT	DETAIL	R. BENGERT	REVIEW	SERIES # 24 OF 29
CHECK	C. EVANS	CHECK	C. EVANS		

TECHNICAL PROPOSAL

PRELIMINARY
NOT FOR CONSTRUCTION
ENGINEER: ART DEITCH
LICENSE #: 41842
DATE: 04/19/2023

NO.	DATE	REVISION OR CHANGE ORDER DESCRIPTION	BY

PROPOSED PAVEMENT MARKINGS

I-10 CALCASIEU RIVER BRIDGE P3

DOTD LOUISIANA DEPARTMENT OF TRANSPORTATION & DEVELOPMENT

CBP CALCASIEU BRIDGE PARTNERS

04/19/23

TECHNICAL PROPOSAL

NOTES:

1. REFER TO ROADWAY TYPICAL SECTIONS FOR RUMBLE STRIP LOCATIONS.

2. PLANS WERE DEVELOPED IN ACCORDANCE WITH THE LATEST LADOTD STANDARD PLANS AND SPECIAL DETAILS.

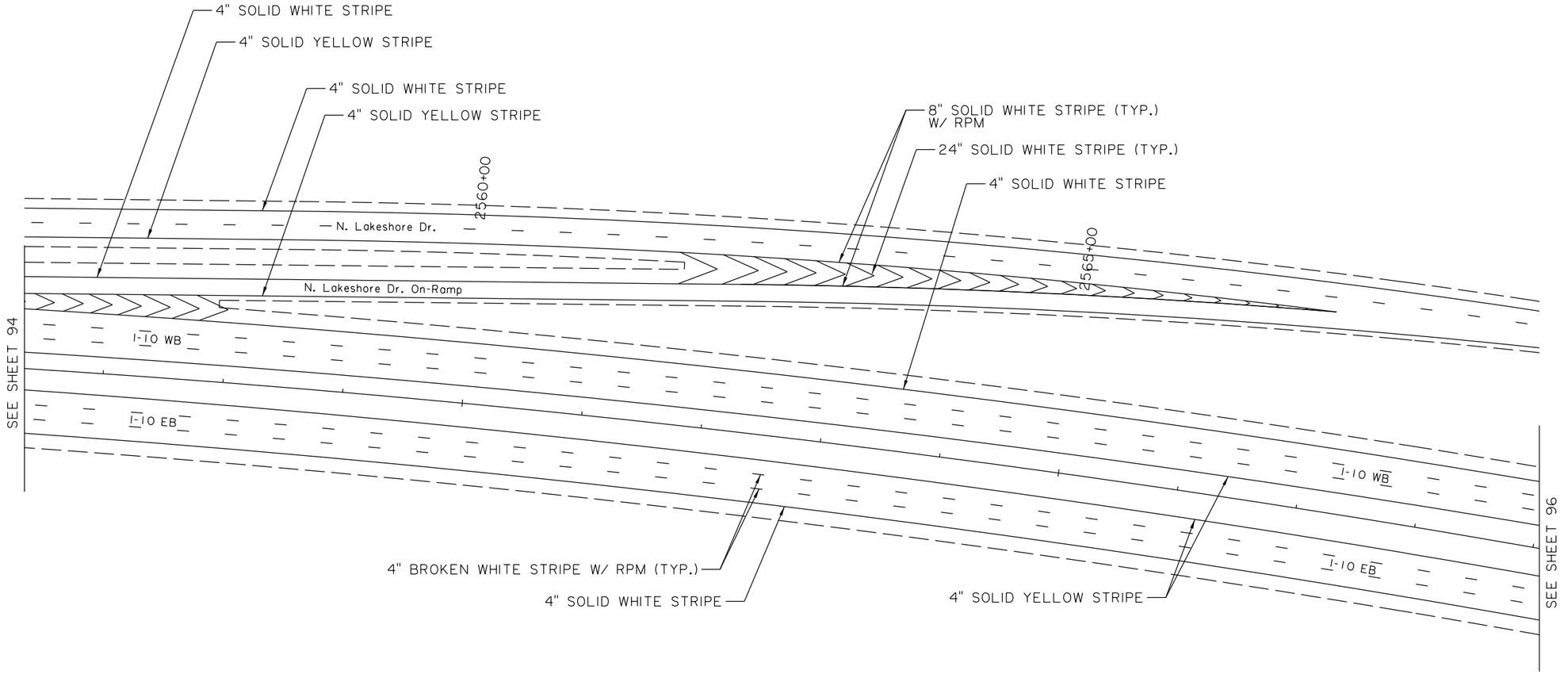

N

0 50′ 100′

SCALE:1"=100′

04/19/23

TECHNICAL PROPOSAL

SHEET NUMBER	95
PARISH	CALCASIEU
CONTROL SECTION	450-91
STATE PROJECT	H.003931
DESIGN	R. BENGERT
CHECK	C. EVANS
DETAIL	R. BENGERT
CHECK	C. EVANS
REVIEW	
SERIES #	25 OF 29

TECHNICAL PROPOSAL

PRELIMINARY
NOT FOR CONSTRUCTION
ENGINEER: ARI DEITCH
LICENSE #: 41842
DATE: 04/19/2023

NO.	DATE	REVISION OR CHANGE ORDER DESCRIPTION	BY

PROPOSED PAVEMENT MARKINGS

I-10 CALCASIEU RIVER BRIDGE P3

DOTD LOUISIANA DEPARTMENT OF TRANSPORTATION & DEVELOPMENT

CBP CALCASIEU BRIDGE PARTNERS

NOTES:

1. REFER TO ROADWAY TYPICAL SECTIONS FOR RUMBLE STRIP LOCATIONS.

2. PLANS WERE DEVELOPED IN ACCORDANCE WITH THE LATEST LADOTD STANDARD PLANS AND SPECIAL DETAILS.

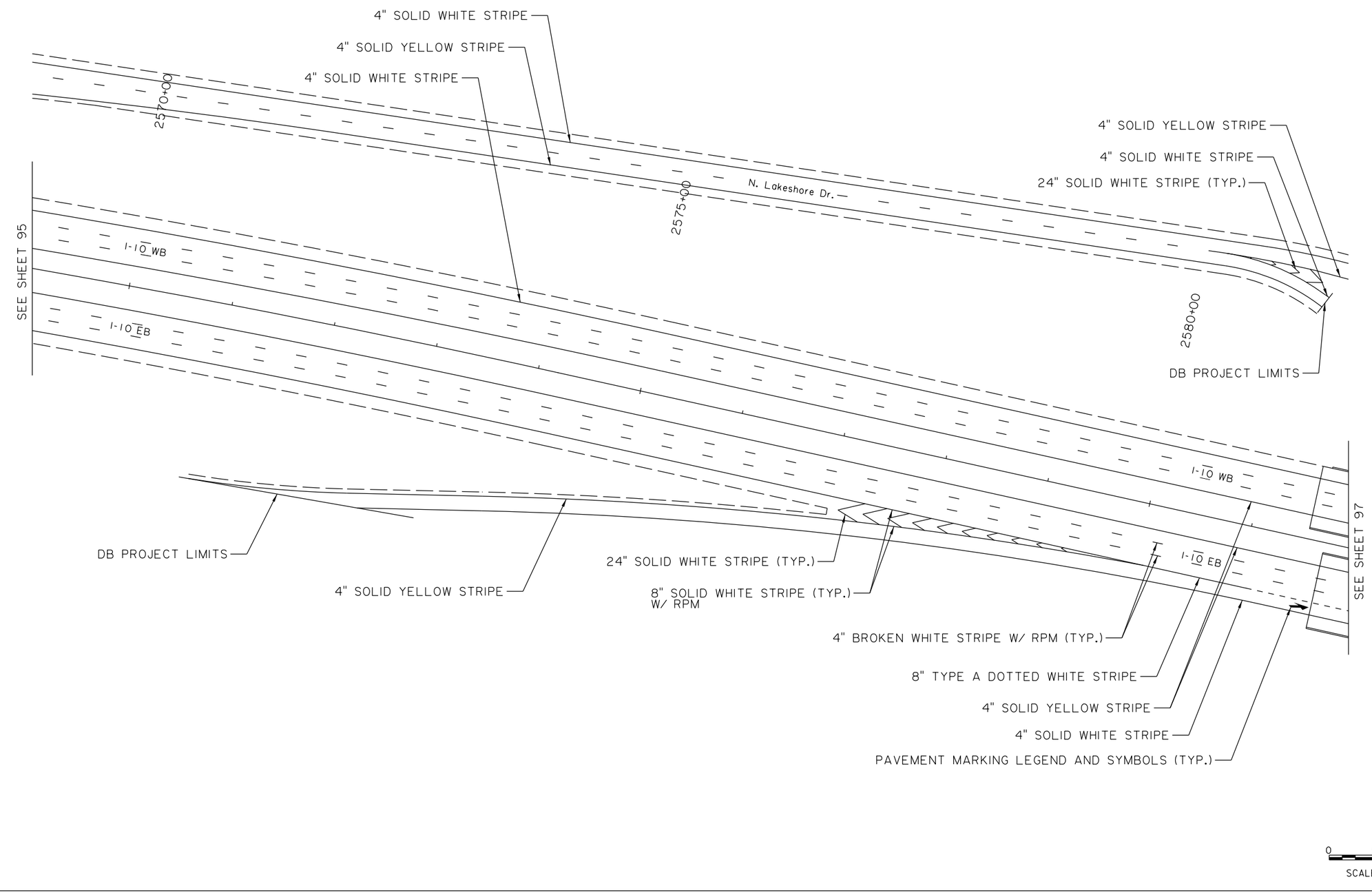

SHEET NUMBER 96

PARISH	CONTROL SECTION	STATE PROJECT
CALCASIEU	450-91	H.003931

DESIGN	CHECK	DETAIL	CHECK	REVIEW	SERIES
R. BENGERT	C. EVANS	R. BENGERT	C. EVANS		26 OF 29

TECHNICAL PROPOSAL

PRELIMINARY
NOT FOR CONSTRUCTION
ENGINEER: ART DEITCH
LICENSE #: 41842
DATE: 04/19/2023

NO.	DATE	REVISION OR CHANGE ORDER DESCRIPTION	BY

PROPOSED PAVEMENT MARKINGS

I-10 CALCASIEU RIVER BRIDGE P3

LOUISIANA DEPARTMENT OF TRANSPORTATION & DEVELOPMENT

CALCASIEU BRIDGE PARTNERS

04/19/23

TECHNICAL PROPOSAL

NOTES:

1. REFER TO ROADWAY TYPICAL SECTIONS FOR RUMBLE STRIP LOCATIONS.

2. PLANS WERE DEVELOPED IN ACCORDANCE WITH THE LATEST LADOTD STANDARD PLANS AND SPECIAL DETAILS.

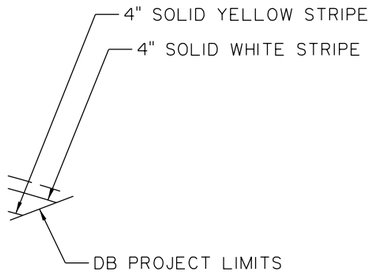

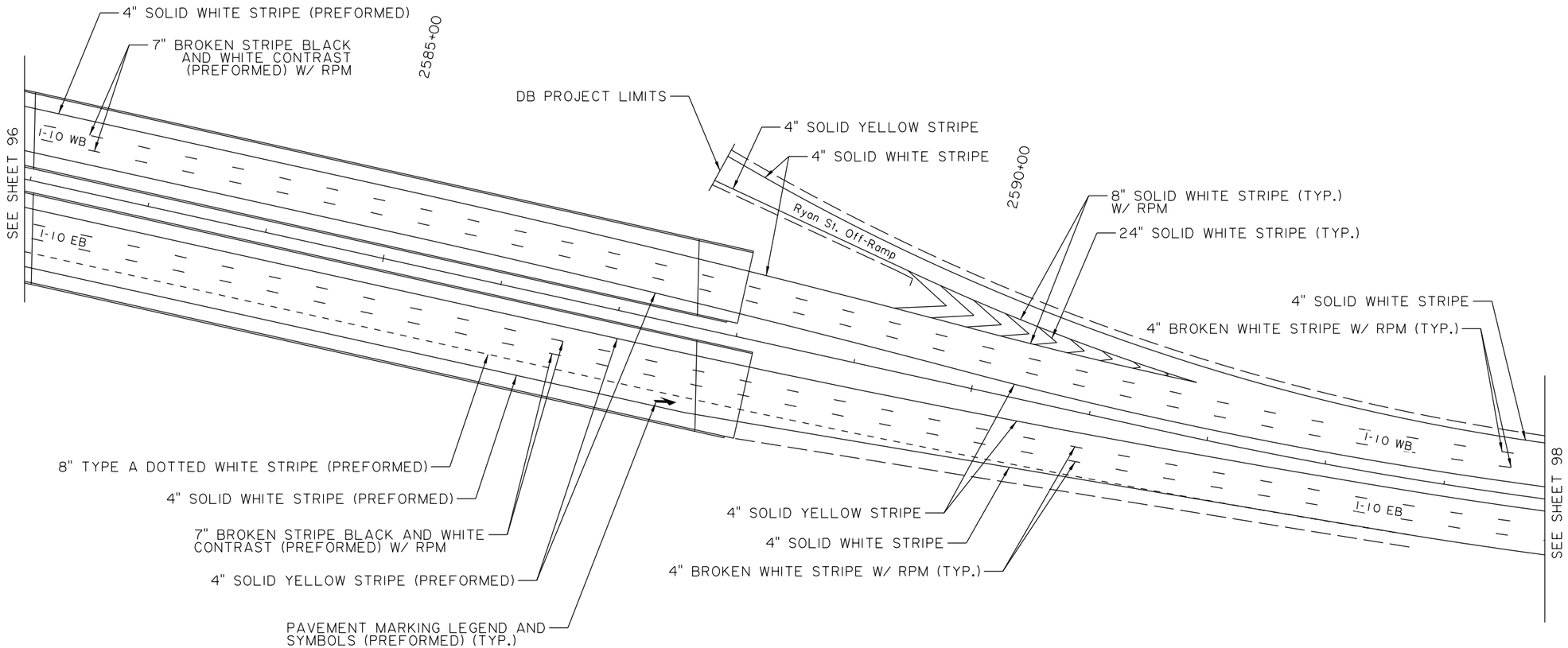

0 50′ 100′
SCALE:1"=100′

N

SHEET NUMBER 97

PARISH	CONTROL SECTION	STATE PROJECT
CALCASIEU	450-91	H.003931

	DESIGN	CHECK	DETAIL	CHECK	REVIEW	SERIES
	R. BENGERT	C. EVANS	R. BENGERT	C. EVANS		27 OF 29

TECHNICAL PROPOSAL
PRELIMINARY
NOT FOR CONSTRUCTION
ENGINEER: ART DEITCH
LICENSE #: 41842
DATE: 04/19/2023

NO.	DATE	REVISION OR CHANGE ORDER DESCRIPTION	BY

PROPOSED PAVEMENT MARKINGS

I-10 CALCASIEU RIVER BRIDGE P3

LOUISIANA DEPARTMENT OF TRANSPORTATION & DEVELOPMENT

CALCASIEU BRIDGE PARTNERS

04/19/23

TECHNICAL PROPOSAL

NOTES:

1. REFER TO ROADWAY TYPICAL SECTIONS FOR RUMBLE STRIP LOCATIONS.

2. PLANS WERE DEVELOPED IN ACCORDANCE WITH THE LATEST LADOTD STANDARD PLANS AND SPECIAL DETAILS.

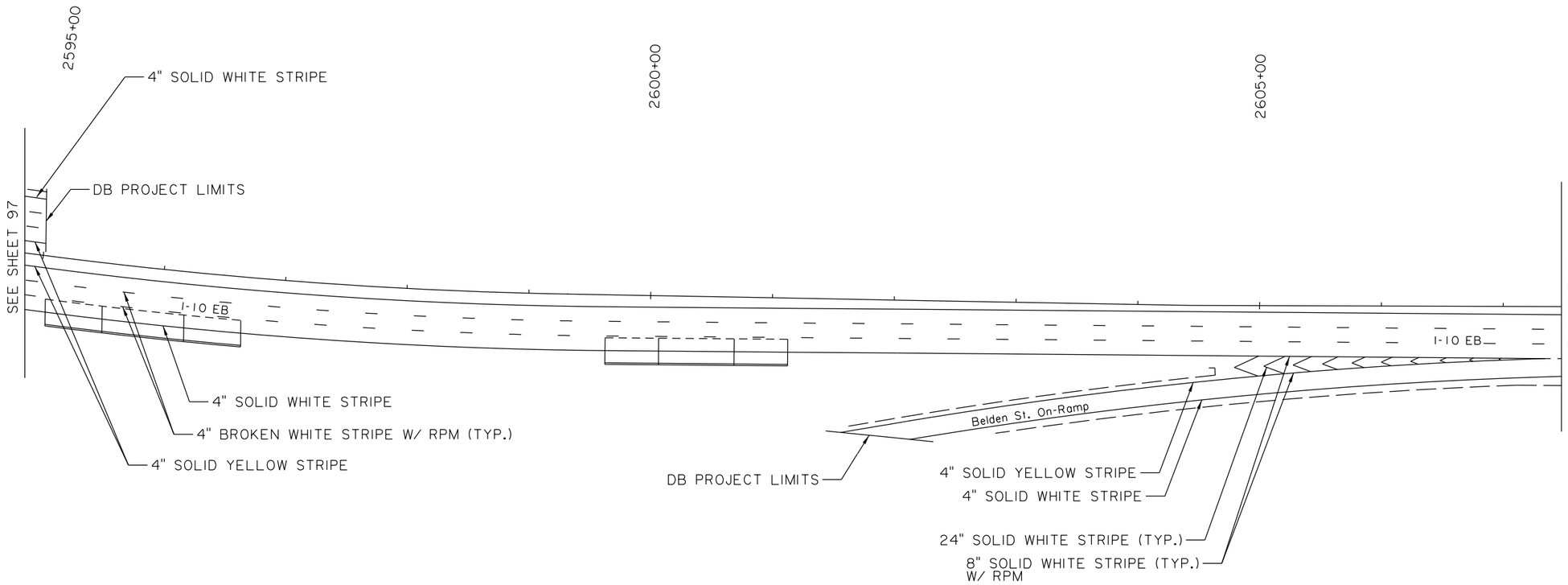

N

0 50' 100'

SCALE:1"=100'

04/19/23

TECHNICAL PROPOSAL

SHEET NUMBER	98
PARISH	CALCASIEU
CONTROL SECTION	450-91
STATE PROJECT	H.003931

DESIGN	R. BENGERT	DETAIL	R. BENGERT	SERIES # 28 OF 29
CHECK	C. EVANS	CHECK	C. EVANS	REVIEW

TECHNICAL PROPOSAL

PRELIMINARY
NOT FOR CONSTRUCTION
ENGINEER: ART DEITCH
LICENSE #: 41842
DATE: 04/19/2023

NO.	DATE	REVISION OR CHANGE ORDER DESCRIPTION	BY

PROPOSED PAVEMENT MARKINGS

I-10 CALCASIEU RIVER BRIDGE P3

LOUISIANA DEPARTMENT OF TRANSPORTATION & DEVELOPMENT

CALCASIEU BRIDGE PARTNERS

NOTES:

1. REFER TO ROADWAY TYPICAL SECTIONS FOR RUMBLE STRIP LOCATIONS.

2. PLANS WERE DEVELOPED IN ACCORDANCE WITH THE LATEST LADOTD STANDARD PLANS AND SPECIAL DETAILS.

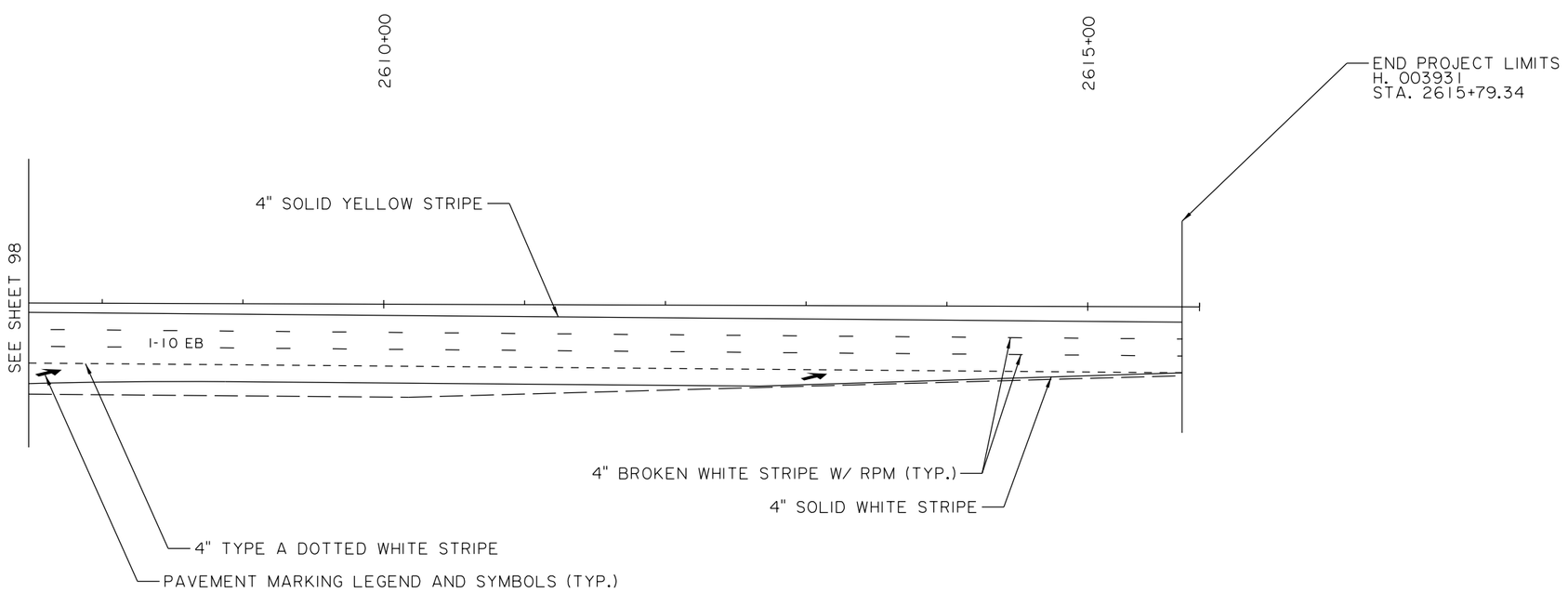

N

0 50' 100'

SCALE:1"=100'

04/19/23

TECHNICAL PROPOSAL

SHEET NUMBER	99
PARISH	CALCASIEU
CONTROL SECTION	450-91
STATE PROJECT	H.003931

DESIGN	R. BENGERT	DETAIL	R. BENGERT	REVIEW	SERIES # 29 OF 29
CHECK	C. EVANS	CHECK	C. EVANS		

TECHNICAL PROPOSAL

PRELIMINARY
NOT FOR CONSTRUCTION

ENGINEER:
ART DEITCH

LICENSE #:
41842

DATE:
04/19/2023

NO.	DATE	REVISION OR CHANGE ORDER DESCRIPTION	BY

PROPOSED PAVEMENT MARKINGS

I-10 CALCASIEU RIVER BRIDGE P3

DOTD LOUISIANA DEPARTMENT OF TRANSPORTATION & DEVELOPMENT

CBP CALCASIEU BRIDGE PARTNERS

TECHNICAL PROPOSAL 04/19/23

ITS LEGEND

EXISTING	PROPOSED	
HUB		Hub Cabinet
		Cabinet
PTZ	PTZ	CCTV
		Conduit
		Overhead Electric Cable
	—E—	Underground Electric Cable
		Directional Bored Conduit
	—C—	Trenched Conduit
	—FOA—	Bridge Mounted Conduit
		Existing Right of Way
		Required Right of Way
		Demarcation Point
		Power Pole
		Steel Pole
		Fiber Junction Box
		Fiber Splice Vault
		Electrical Junction Box

0 50′ 100′

SCALE:1"=100′

SHEET NUMBER 100

PARISH	CONTROL SECTION	STATE PROJECT
CALCASIEU	450-91	H.003931

DESIGN	CHECK	DETAIL	CHECK	REVIEW	SERIES
K. HULSMAN	C. EVANS	K. HULSMAN	C. EVANS		1 OF 28

TECHNICAL PROPOSAL

PRELIMINARY

NOT FOR CONSTRUCTION

ENGINEER:
ART DEITCH

LICENSE #:
41842

DATE:
04/19/2023

NO.	DATE	REVISION OR CHANGE ORDER DESCRIPTION	BY

PROPOSED ITS PLANS

I-10 CALCASIEU RIVER BRIDGE P3

DOTD LOUISIANA DEPARTMENT OF TRANSPORTATION & DEVELOPMENT

CBP CALCASIEU BRIDGE PARTNERS

NOTES:
1. PLANS WERE DEVELOPED IN ACCORDANCE WITH THE LATEST LA DOTD STANDARD PLANS AND SPECIAL DETAILS.
2. PROPOSED DUCT BANK SHALL INCLUDE:
   - 2-2" CONDUITS WITH 2-48 COUNT DARK FIBER TRUNKLINES OWNED BY LA DOTD FOR FUTURE USE (DESIGNED AND CONSTRUCTED IN ACCORDANCE WITH LA DOTD STANDARDS AND SPECIFICATIONS).
   - ALL PERMITTED FIBERS (DESIGNED AND CONSTRUCTED IN ACCORDANCE WITH PERMITEE DESIGN REQUIREMENTS).
3. THESE ITS PLANS ONLY SHOW LA DOTD ITS COMPONENTS AND DO NOT ACCOUNT FOR ANY ADDITIONAL CONDUITS, PULL BOXES, FIBERS, ETC. THAT ARE NECESSARY BASED ON PERMITTEE DESIGN REQUIREMENTS WHICH SHALL BE DETERMINED AT A LATER DATE.

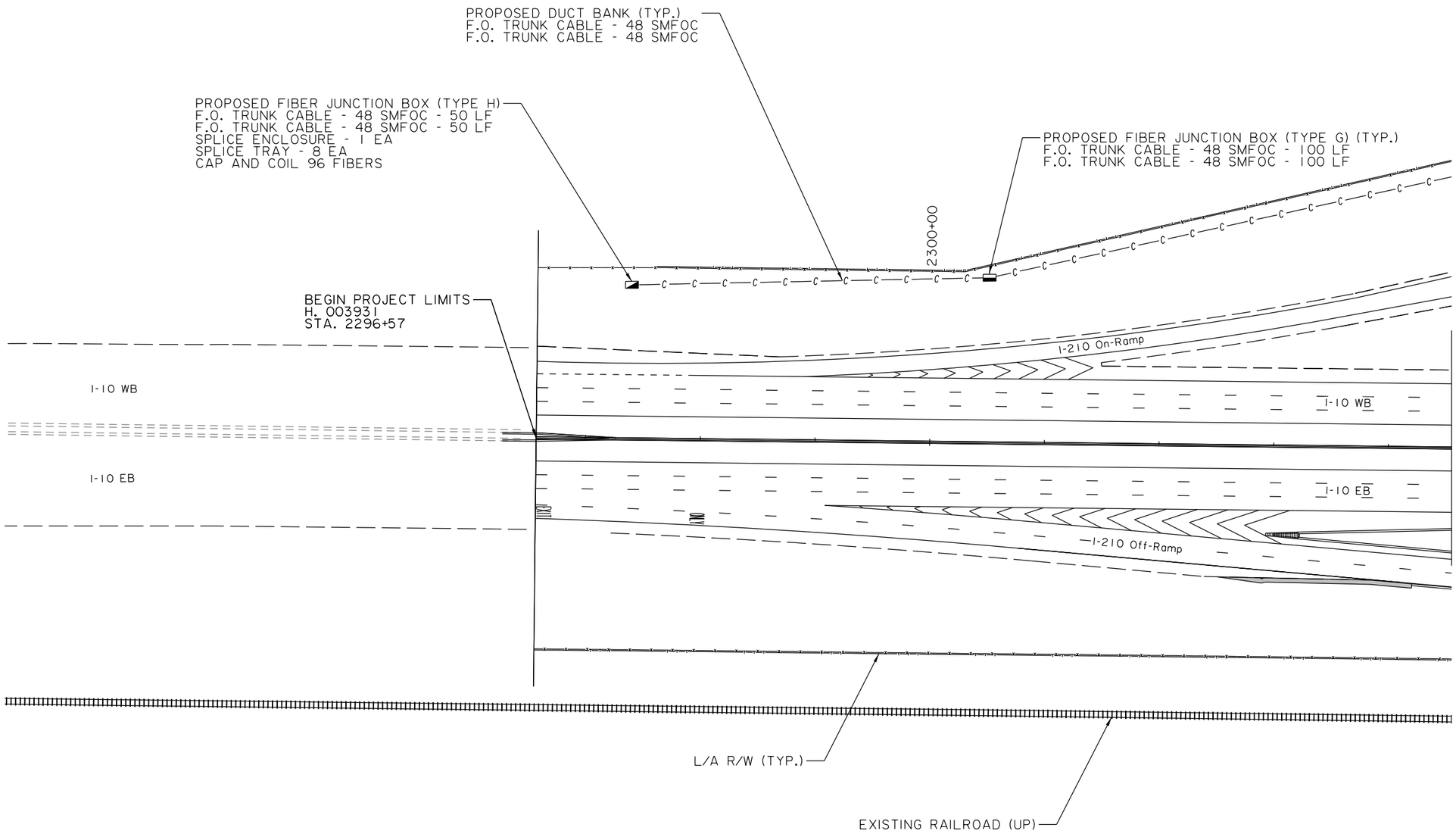

04/19/23

TECHNICAL PROPOSAL

SHEET NUMBER	101
PARISH	CALCASIEU
CONTROL SECTION	450-91
STATE PROJECT	H.003931
DESIGN	K. HULSMAN
CHECK	C. EVANS
DETAIL	K. HULSMAN
CHECK	C. EVANS
REVIEW	
SERIES	2 OF 28

TECHNICAL PROPOSAL
PRELIMINARY
NOT FOR CONSTRUCTION
ENGINEER: ART DEITCH
LICENSE #: 41842
DATE: 04/19/2023

NO.	DATE	REVISION OR CHANGE ORDER DESCRIPTION	BY

PROPOSED ITS PLANS

I-10 CALCASIEU RIVER BRIDGE P3

DOTD LOUISIANA DEPARTMENT OF TRANSPORTATION & DEVELOPMENT

CBP CALCASIEU BRIDGE PARTNERS

TECHNICAL PROPOSAL

04/19/23

NOTES:
1. PLANS WERE DEVELOPED IN ACCORDANCE WITH THE LATEST LA DOTD STANDARD PLANS AND SPECIAL DETAILS.
2. PROPOSED DUCT BANK SHALL INCLUDE:
   - 2-2" CONDUITS WITH 2-48 COUNT DARK FIBER TRUNKLINES OWNED BY LA DOTD FOR FUTURE USE (DESIGNED AND CONSTRUCTED IN ACCORDANCE WITH LA DOTD STANDARDS AND SPECIFICATIONS).
   - ALL PERMITTED FIBERS (DESIGNED AND CONSTRUCTED IN ACCORDANCE WITH PERMITEE DESIGN REQUIREMENTS).
3. THESE ITS PLANS ONLY SHOW LA DOTD ITS COMPONENTS AND DO NOT ACCOUNT FOR ANY ADDITIONAL CONDUITS, PULL BOXES, FIBERS, ETC. THAT ARE NECESSARY BASED ON PERMITTEE DESIGN REQUIREMENTS WHICH SHALL BE DETERMINED AT A LATER DATE.

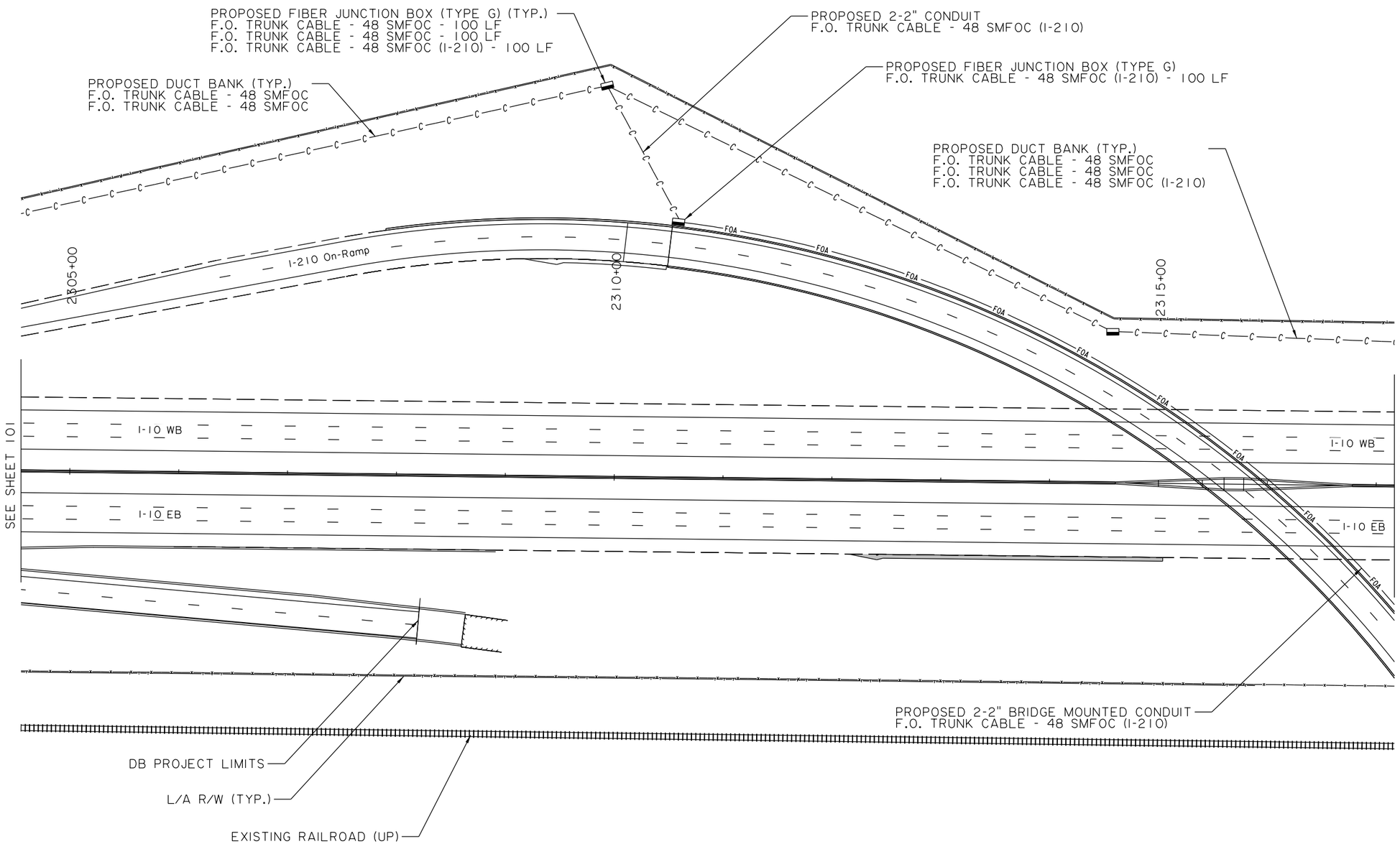

SHEET NUMBER	102
PARISH	CALCASIEU
CONTROL SECTION	450-91
STATE PROJECT	H.003931
DESIGN	K. HULSMAN
CHECK	C. EVANS
DETAIL	K. HULSMAN
CHECK	C. EVANS
REVIEW	
SERIES #	3 OF 28

TECHNICAL PROPOSAL
PRELIMINARY
NOT FOR CONSTRUCTION
ENGINEER: ART DEITCH
LICENSE #: 41842
DATE: 04/19/2023

NO.	DATE	REVISION OR CHANGE ORDER DESCRIPTION	BY

PROPOSED ITS PLANS

I-10 CALCASIEU RIVER BRIDGE P3

LOUISIANA DEPARTMENT OF TRANSPORTATION & DEVELOPMENT

CALCASIEU BRIDGE PARTNERS

NOTES:
1. PLANS WERE DEVELOPED IN ACCORDANCE WITH THE LATEST LA DOTD STANDARD PLANS AND SPECIAL DETAILS.
2. PROPOSED DUCT BANK SHALL INCLUDE:
   - 2-2" CONDUITS WITH 2-48 COUNT DARK FIBER TRUNKLINES OWNED BY LA DOTD FOR FUTURE USE (DESIGNED AND CONSTRUCTED IN ACCORDANCE WITH LA DOTD STANDARDS AND SPECIFICATIONS).
   - ALL PERMITTED FIBERS (DESIGNED AND CONSTRUCTED IN ACCORDANCE WITH PERMITEE DESIGN REQUIREMENTS).
3. THESE ITS PLANS ONLY SHOW LA DOTD ITS COMPONENTS AND DO NOT ACCOUNT FOR ANY ADDITIONAL CONDUITS, PULL BOXES, FIBERS, ETC. THAT ARE NECESSARY BASED ON PERMITTEE DESIGN REQUIREMENTS WHICH SHALL BE DETERMINED AT A LATER DATE.

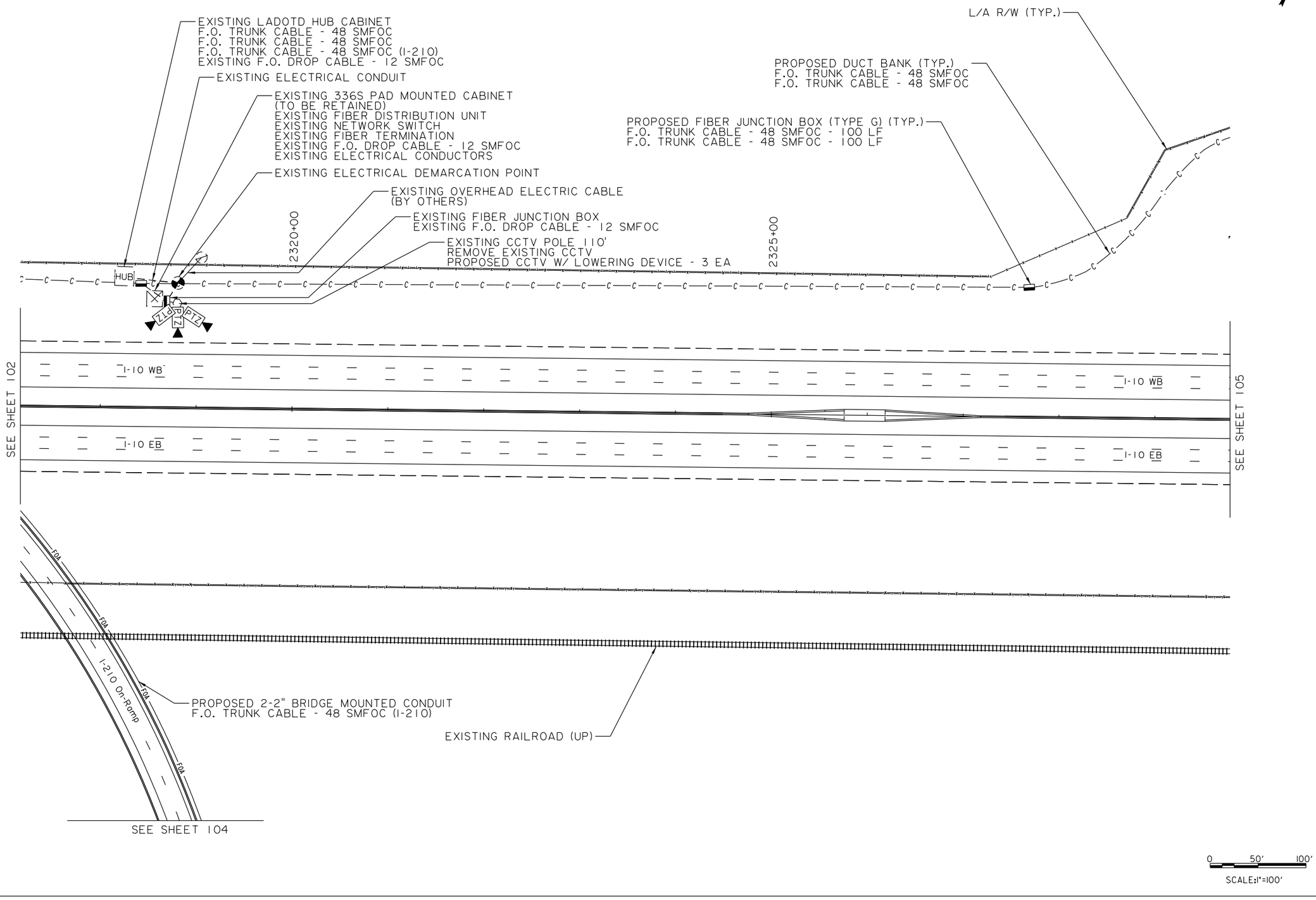

TECHNICAL PROPOSAL

04/19/23

SHEET NUMBER 103

PARISH	CONTROL SECTION	STATE PROJECT
CALCASIEU	450-91	H.003931

DESIGN	CHECK	DETAIL	CHECK	REVIEW	SERIES
K. HULSMAN	C. EVANS	K. HULSMAN	C. EVANS		4 OF 28

TECHNICAL PROPOSAL
PRELIMINARY
NOT FOR CONSTRUCTION
ENGINEER: ART DEITCH
LICENSE #: 41842
DATE: 04/19/2023

NO.	DATE	REVISION OR CHANGE ORDER DESCRIPTION	BY

PROPOSED ITS PLANS

I-10 CALCASIEU RIVER BRIDGE P3

DOTD LOUISIANA DEPARTMENT OF TRANSPORTATION & DEVELOPMENT

CBP CALCASIEU BRIDGE PARTNERS

NOTES:
1. PLANS WERE DEVELOPED IN ACCORDANCE WITH THE LATEST LA DOTD STANDARD PLANS AND SPECIAL DETAILS.
2. PROPOSED DUCT BANK SHALL INCLUDE:
   - 2-2" CONDUITS WITH 2-48 COUNT DARK FIBER TRUNKLINES OWNED BY LA DOTD FOR FUTURE USE (DESIGNED AND CONSTRUCTED IN ACCORDANCE WITH LA DOTD STANDARDS AND SPECIFICATIONS).
   - ALL PERMITTED FIBERS (DESIGNED AND CONSTRUCTED IN ACCORDANCE WITH PERMITEE DESIGN REQUIREMENTS).
3. THESE ITS PLANS ONLY SHOW LA DOTD ITS COMPONENTS AND DO NOT ACCOUNT FOR ANY ADDITIONAL CONDUITS, PULL BOXES, FIBERS, ETC. THAT ARE NECESSARY BASED ON PERMITTEE DESIGN REQUIREMENTS WHICH SHALL BE DETERMINED AT A LATER DATE.

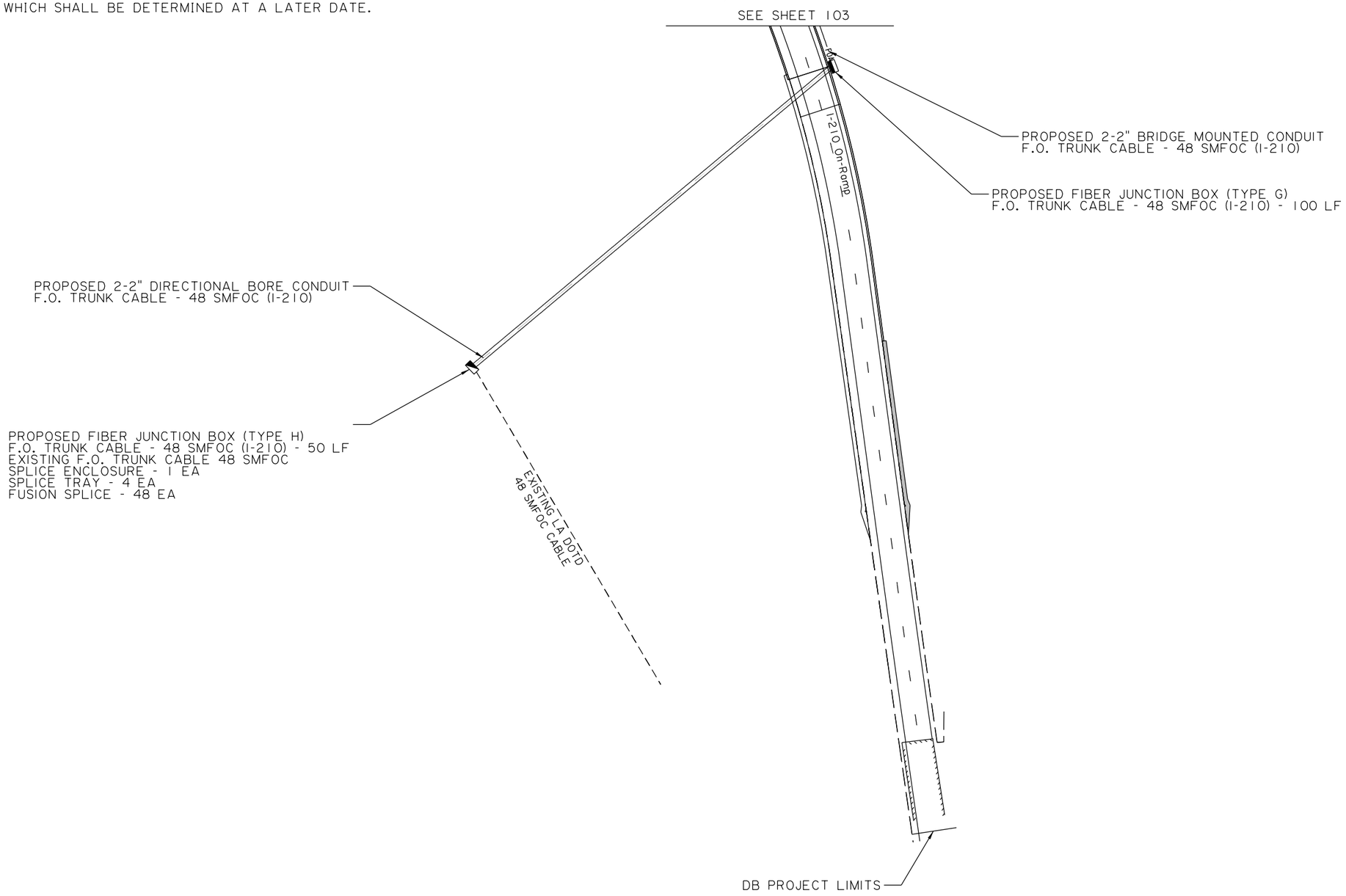

0 50' 100'
SCALE:1"=100'

04/19/23

TECHNICAL PROPOSAL

SHEET NUMBER	104
PARISH	CALCASIEU
CONTROL SECTION	450-91
STATE PROJECT	H.003931
DESIGN	K. HULSMAN
CHECK	C. EVANS
DETAIL	K. HULSMAN
CHECK	C. EVANS
REVIEW	
SERIES #	5 OF 28

TECHNICAL PROPOSAL
PRELIMINARY
NOT FOR CONSTRUCTION
ENGINEER: ART DEITCH
LICENSE #: 41842
DATE: 04/19/2023

NO.	DATE	REVISION OR CHANGE ORDER DESCRIPTION	BY

PROPOSED ITS PLANS

I-10 CALCASIEU RIVER BRIDGE P3

DOTD LOUISIANA DEPARTMENT OF TRANSPORTATION & DEVELOPMENT

CBP CALCASIEU BRIDGE PARTNERS

NOTES:
1. PLANS WERE DEVELOPED IN ACCORDANCE WITH THE LATEST LA DOTD STANDARD PLANS AND SPECIAL DETAILS.
2. PROPOSED DUCT BANK SHALL INCLUDE:
   - 2-2" CONDUITS WITH 2-48 COUNT DARK FIBER TRUNKLINES OWNED BY LA DOTD FOR FUTURE USE (DESIGNED AND CONSTRUCTED IN ACCORDANCE WITH LA DOTD STANDARDS AND SPECIFICATIONS).
   - ALL PERMITTED FIBERS (DESIGNED AND CONSTRUCTED IN ACCORDANCE WITH PERMITEE DESIGN REQUIREMENTS).
3. THESE ITS PLANS ONLY SHOW LA DOTD ITS COMPONENTS AND DO NOT ACCOUNT FOR ANY ADDITIONAL CONDUITS, PULL BOXES, FIBERS, ETC. THAT ARE NECESSARY BASED ON PERMITTEE DESIGN REQUIREMENTS WHICH SHALL BE DETERMINED AT A LATER DATE.

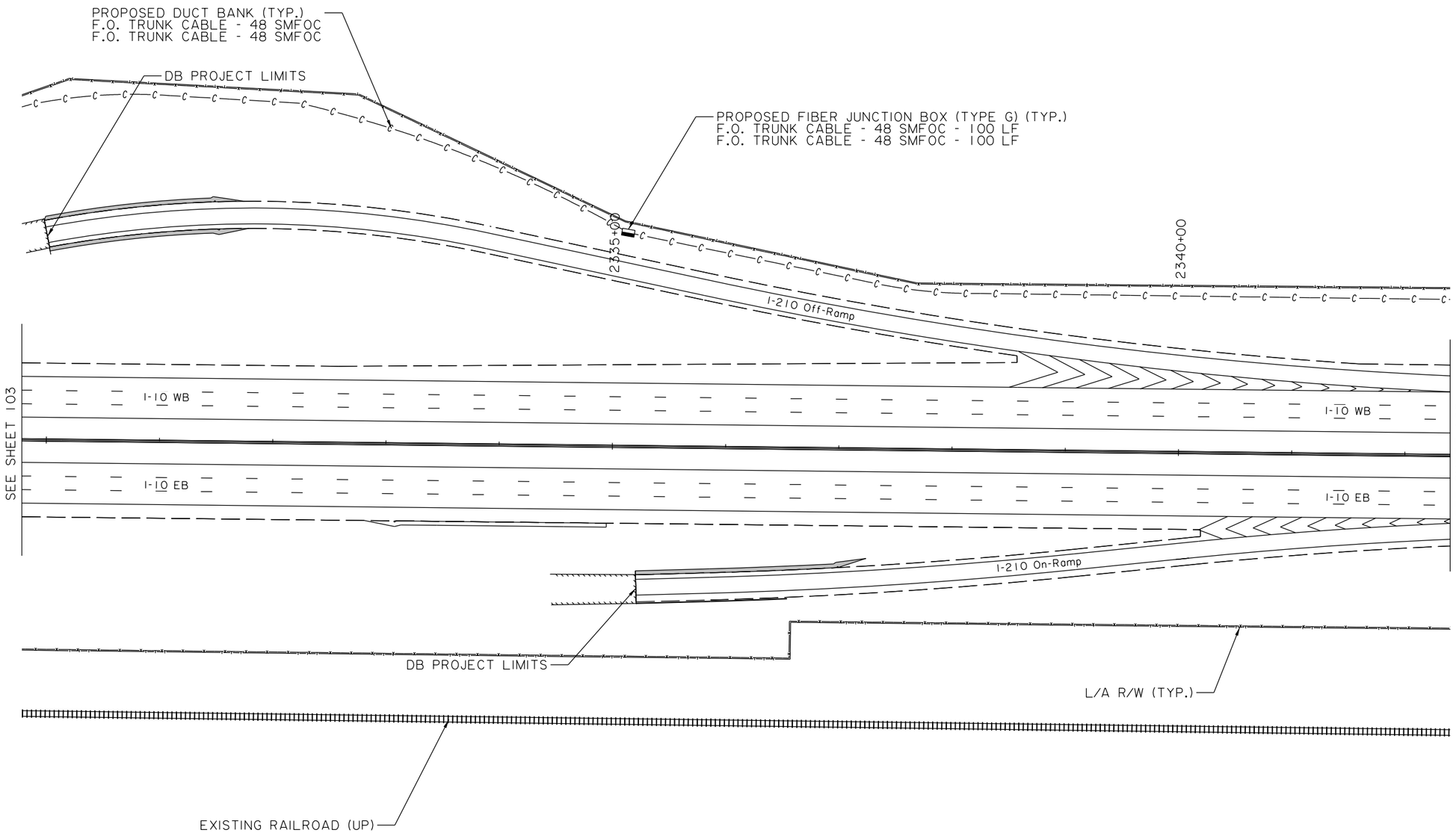

0 50' 100'
SCALE:1"=100'

N

04/19/23

TECHNICAL PROPOSAL

SHEET NUMBER	105

PARISH	CONTROL SECTION	STATE PROJECT
CALCASIEU	450-91	H.003931

DESIGN	K. HULSMAN
CHECK	C. EVANS
DETAIL	K. HULSMAN
CHECK	C. EVANS
REVIEW	
SERIES #	6 OF 28

TECHNICAL PROPOSAL
PRELIMINARY
NOT FOR CONSTRUCTION
ENGINEER: ART DEITCH
LICENSE #: 41842
DATE: 04/19/2023

NO.	DATE	REVISION OR CHANGE ORDER DESCRIPTION	BY

PROPOSED ITS PLANS

I-10 CALCASIEU RIVER BRIDGE P3

LOUISIANA DEPARTMENT OF TRANSPORTATION & DEVELOPMENT

CALCASIEU BRIDGE PARTNERS

NOTES:
1. PLANS WERE DEVELOPED IN ACCORDANCE WITH THE LATEST LA DOTD STANDARD PLANS AND SPECIAL DETAILS.
2. PROPOSED DUCT BANK SHALL INCLUDE:
   - 2-2" CONDUITS WITH 2-48 COUNT DARK FIBER TRUNKLINES OWNED BY LA DOTD FOR FUTURE USE (DESIGNED AND CONSTRUCTED IN ACCORDANCE WITH LA DOTD STANDARDS AND SPECIFICATIONS).
   - ALL PERMITTED FIBERS (DESIGNED AND CONSTRUCTED IN ACCORDANCE WITH PERMITEE DESIGN REQUIREMENTS).
3. THESE ITS PLANS ONLY SHOW LA DOTD ITS COMPONENTS AND DO NOT ACCOUNT FOR ANY ADDITIONAL CONDUITS, PULL BOXES, FIBERS, ETC. THAT ARE NECESSARY BASED ON PERMITTEE DESIGN REQUIREMENTS WHICH SHALL BE DETERMINED AT A LATER DATE.

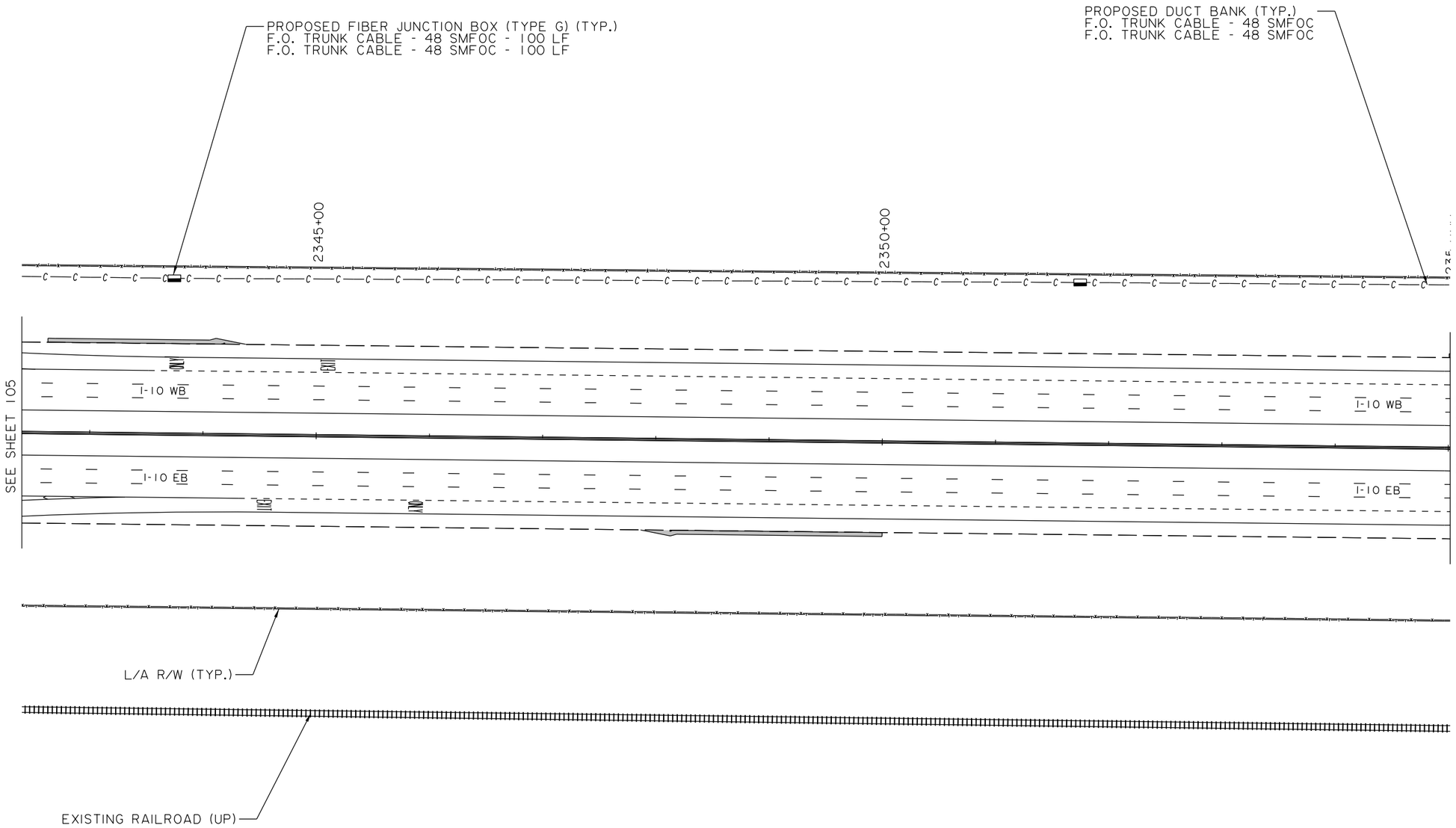

0 50' 100'
SCALE:1"=100'

TECHNICAL PROPOSAL 04/19/23

SHEET NUMBER	106
PARISH	CALCASIEU
CONTROL SECTION	450-91
STATE PROJECT	H.003931

DESIGN	K. HULSMAN	DETAIL	K. HULSMAN	SERIES # 7 OF 28
CHECK	C. EVANS	CHECK	C. EVANS	REVIEW

TECHNICAL PROPOSAL
PRELIMINARY
NOT FOR CONSTRUCTION
ENGINEER: ART DEITCH
LICENSE #: 41842
DATE: 04/19/2023

NO.	DATE	REVISION OR CHANGE ORDER DESCRIPTION	BY

PROPOSED ITS PLANS

I-10 CALCASIEU RIVER BRIDGE P3

LOUISIANA DEPARTMENT OF TRANSPORTATION & DEVELOPMENT

CALCASIEU BRIDGE PARTNERS

NOTES:
1. PLANS WERE DEVELOPED IN ACCORDANCE WITH THE LATEST LA DOTD STANDARD PLANS AND SPECIAL DETAILS.
2. PROPOSED DUCT BANK SHALL INCLUDE:
   - 2-2" CONDUITS WITH 2-48 COUNT DARK FIBER TRUNKLINES OWNED BY LA DOTD FOR FUTURE USE (DESIGNED AND CONSTRUCTED IN ACCORDANCE WITH LA DOTD STANDARDS AND SPECIFICATIONS).
   - ALL PERMITTED FIBERS (DESIGNED AND CONSTRUCTED IN ACCORDANCE WITH PERMITEE DESIGN REQUIREMENTS).
3. THESE ITS PLANS ONLY SHOW LA DOTD ITS COMPONENTS AND DO NOT ACCOUNT FOR ANY ADDITIONAL CONDUITS, PULL BOXES, FIBERS, ETC. THAT ARE NECESSARY BASED ON PERMITTEE DESIGN REQUIREMENTS WHICH SHALL BE DETERMINED AT A LATER DATE.

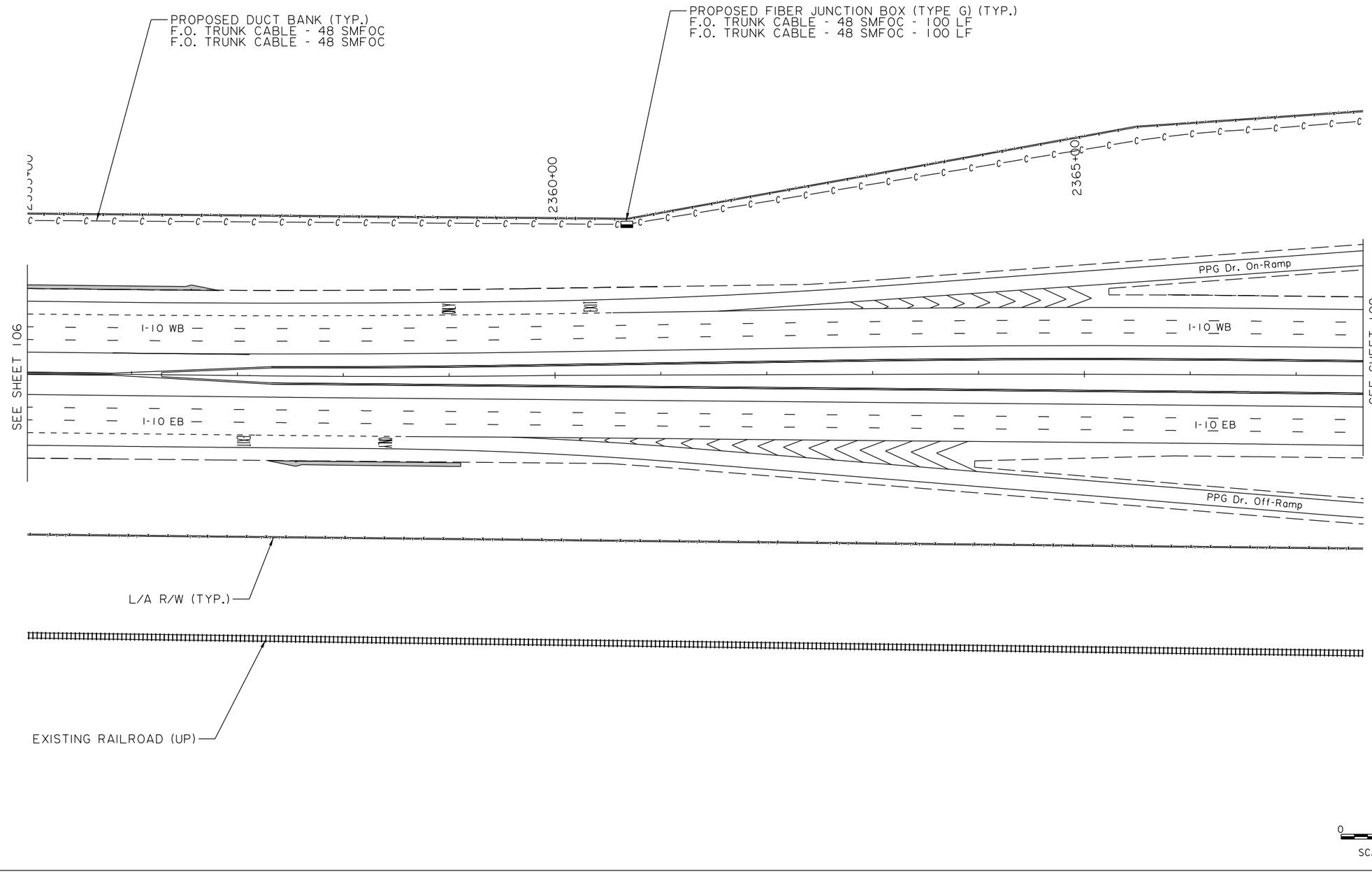

04/19/23

TECHNICAL PROPOSAL

SHEET NUMBER	107
PARISH	CALCASIEU
CONTROL SECTION	450-91
STATE PROJECT	H.003931
DESIGN	K. HULSMAN
CHECK	C. EVANS
DETAIL	K. HULSMAN
CHECK	C. EVANS
REVIEW	
SERIES #	8 OF 28

TECHNICAL PROPOSAL
PRELIMINARY
NOT FOR CONSTRUCTION
ENGINEER: ART DEITCH
LICENSE #: 41842
DATE: 04/19/2023

NO.	DATE	REVISION OR CHANGE ORDER DESCRIPTION	BY

PROPOSED ITS PLANS

I-10 CALCASIEU RIVER BRIDGE P3

DOTD LOUISIANA DEPARTMENT OF TRANSPORTATION & DEVELOPMENT

CBP CALCASIEU BRIDGE PARTNERS

NOTES:
1. PLANS WERE DEVELOPED IN ACCORDANCE WITH THE LATEST LA DOTD STANDARD PLANS AND SPECIAL DETAILS.
2. PROPOSED DUCT BANK SHALL INCLUDE:
   - 2-2" CONDUITS WITH 2-48 COUNT DARK FIBER TRUNKLINES OWNED BY LA DOTD FOR FUTURE USE (DESIGNED AND CONSTRUCTED IN ACCORDANCE WITH LA DOTD STANDARDS AND SPECIFICATIONS).
   - ALL PERMITTED FIBERS (DESIGNED AND CONSTRUCTED IN ACCORDANCE WITH PERMITEE DESIGN REQUIREMENTS).
3. THESE ITS PLANS ONLY SHOW LA DOTD ITS COMPONENTS AND DO NOT ACCOUNT FOR ANY ADDITIONAL CONDUITS, PULL BOXES, FIBERS, ETC. THAT ARE NECESSARY BASED ON PERMITTEE DESIGN REQUIREMENTS WHICH SHALL BE DETERMINED AT A LATER DATE.

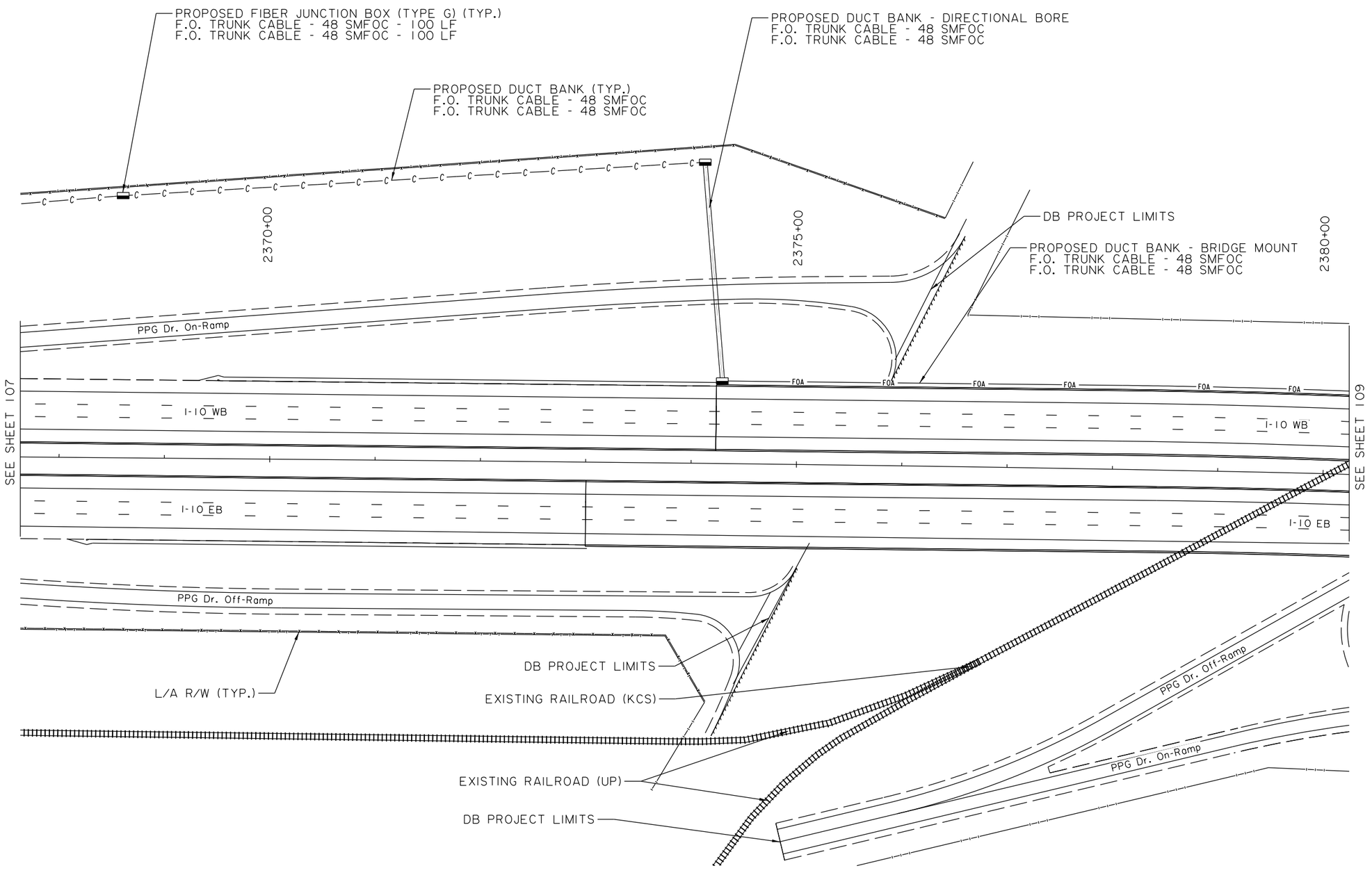

TECHNICAL PROPOSAL 04/19/23

SHEET NUMBER	108
PARISH	CALCASIEU
CONTROL SECTION	450-91
STATE PROJECT	H.003931
DESIGN	K. HULSMAN
CHECK	C. EVANS
DETAIL	K. HULSMAN
CHECK	C. EVANS
REVIEW	
SERIES	9 OF 28

TECHNICAL PROPOSAL
PRELIMINARY
NOT FOR CONSTRUCTION
ENGINEER:
ART DEITCH
LICENSE #:
41842
DATE:
04/19/2023

NO.	DATE	REVISION OR CHANGE ORDER DESCRIPTION	BY

PROPOSED ITS PLANS

I-10 CALCASIEU RIVER BRIDGE P3

DOTD LOUISIANA DEPARTMENT OF TRANSPORTATION & DEVELOPMENT

CBP CALCASIEU BRIDGE PARTNERS

NOTES:
1. PLANS WERE DEVELOPED IN ACCORDANCE WITH THE LATEST LA DOTD STANDARD PLANS AND SPECIAL DETAILS.
2. PROPOSED DUCT BANK SHALL INCLUDE:
   - 2-2" CONDUITS WITH 2-48 COUNT DARK FIBER TRUNKLINES OWNED BY LA DOTD FOR FUTURE USE (DESIGNED AND CONSTRUCTED IN ACCORDANCE WITH LA DOTD STANDARDS AND SPECIFICATIONS).
   - ALL PERMITTED FIBERS (DESIGNED AND CONSTRUCTED IN ACCORDANCE WITH PERMITEE DESIGN REQUIREMENTS).
3. THESE ITS PLANS ONLY SHOW LA DOTD ITS COMPONENTS AND DO NOT ACCOUNT FOR ANY ADDITIONAL CONDUITS, PULL BOXES, FIBERS, ETC. THAT ARE NECESSARY BASED ON PERMITTEE DESIGN REQUIREMENTS WHICH SHALL BE DETERMINED AT A LATER DATE.

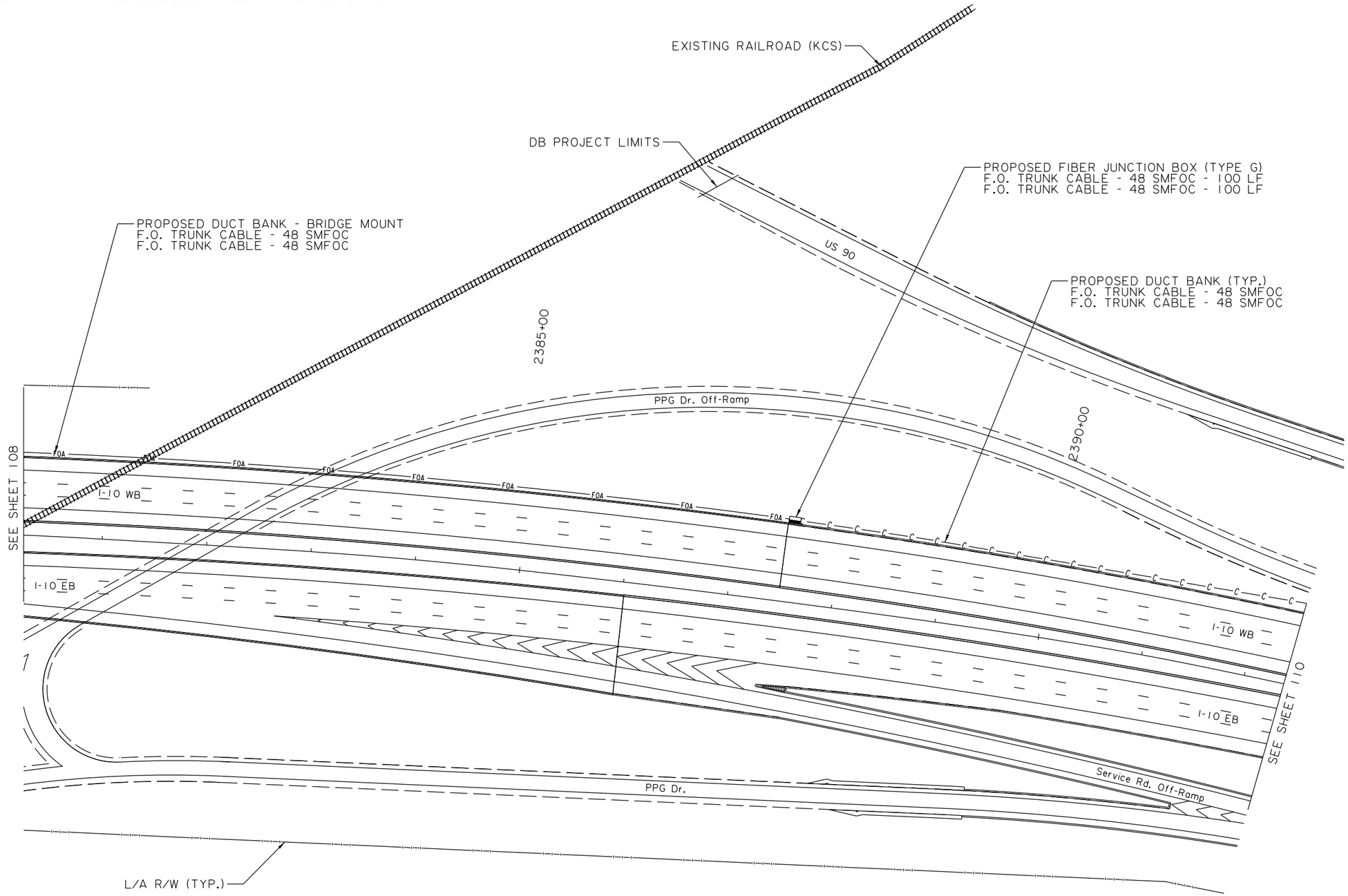

0 50′ 100′
SCALE:1"=100′

04/19/23

TECHNICAL PROPOSAL

SHEET NUMBER	109
PARISH	CALCASIEU
CONTROL SECTION	450-91
STATE PROJECT	H.003931
DESIGN	K. HULSMAN
CHECK	C. EVANS
DETAIL	K. HULSMAN
CHECK	C. EVANS
REVIEW	
SERIES #	10 OF 28

TECHNICAL PROPOSAL
PRELIMINARY
NOT FOR CONSTRUCTION
ENGINEER: ART DEITCH
LICENSE #: 41842
DATE: 04/19/2023

NO.	DATE	REVISION OR CHANGE ORDER DESCRIPTION	BY

PROPOSED ITS PLANS

I-10 CALCASIEU RIVER BRIDGE P3

LOUISIANA DEPARTMENT OF TRANSPORTATION & DEVELOPMENT

CALCASIEU BRIDGE PARTNERS

NOTES:
1. PLANS WERE DEVELOPED IN ACCORDANCE WITH THE LATEST LA DOTD STANDARD PLANS AND SPECIAL DETAILS.
2. PROPOSED DUCT BANK SHALL INCLUDE:
   - 2-2" CONDUITS WITH 2-48 COUNT DARK FIBER TRUNKLINES OWNED BY LA DOTD FOR FUTURE USE (DESIGNED AND CONSTRUCTED IN ACCORDANCE WITH LA DOTD STANDARDS AND SPECIFICATIONS).
   - ALL PERMITTED FIBERS (DESIGNED AND CONSTRUCTED IN ACCORDANCE WITH PERMITEE DESIGN REQUIREMENTS).
3. THESE ITS PLANS ONLY SHOW LA DOTD ITS COMPONENTS AND DO NOT ACCOUNT FOR ANY ADDITIONAL CONDUITS, PULL BOXES, FIBERS, ETC. THAT ARE NECESSARY BASED ON PERMITTEE DESIGN REQUIREMENTS WHICH SHALL BE DETERMINED AT A LATER DATE.

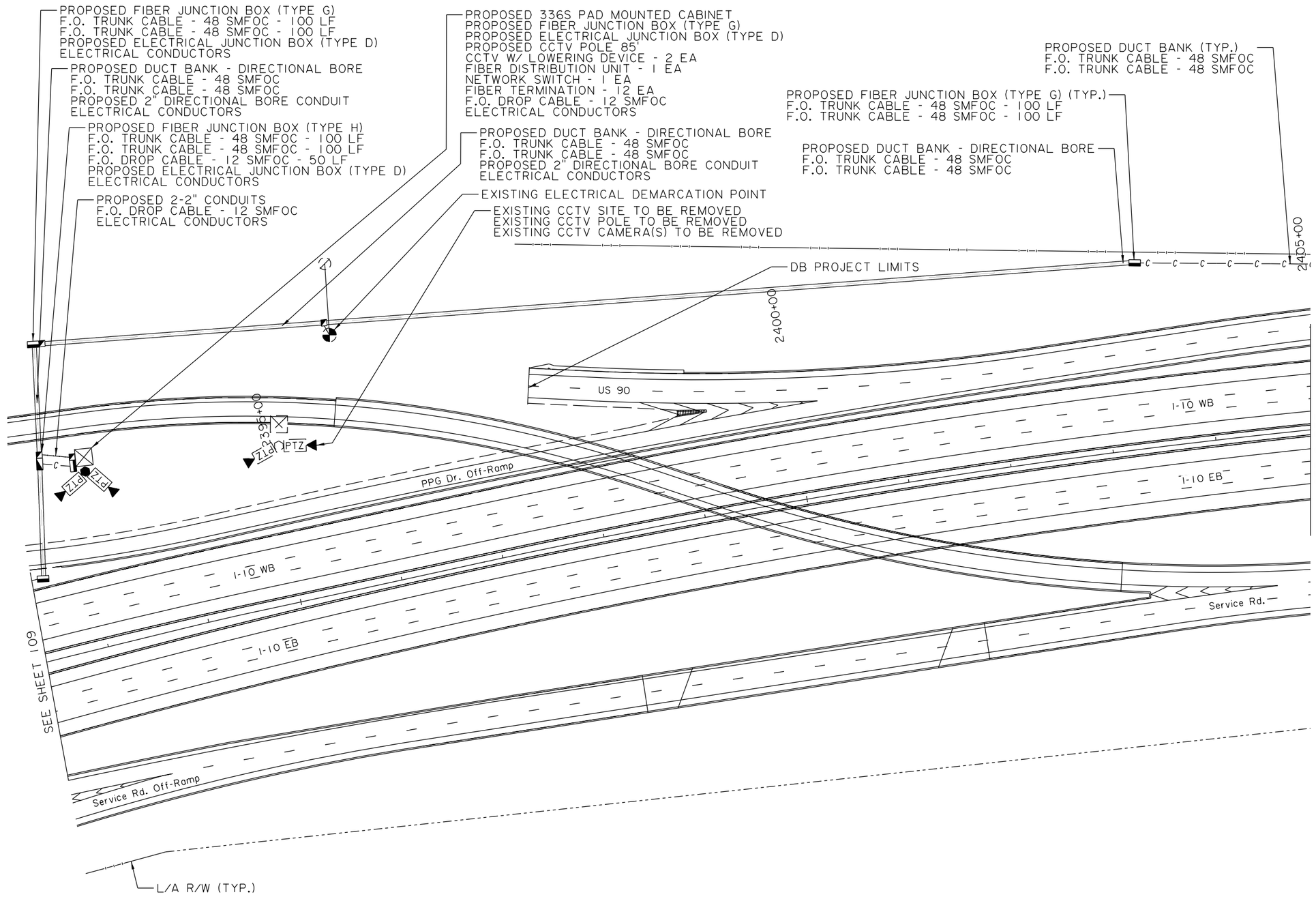

04/19/23

TECHNICAL PROPOSAL

SHEET NUMBER	110
PARISH	CALCASIEU
CONTROL SECTION	450-91
STATE PROJECT	H.003931

DESIGN	K. HULSMAN
CHECK	C. EVANS
DETAIL	K. HULSMAN
CHECK	C. EVANS
REVIEW	
SERIES	11 OF 28

TECHNICAL PROPOSAL
PRELIMINARY
NOT FOR CONSTRUCTION
ENGINEER: ART DEITCH
LICENSE #: 41842
DATE: 04/19/2023

NO.	DATE	REVISION OR CHANGE ORDER DESCRIPTION	BY

PROPOSED ITS PLANS

I-10 CALCASIEU RIVER BRIDGE P3

DOTD LOUISIANA DEPARTMENT OF TRANSPORTATION & DEVELOPMENT

CBP CALCASIEU BRIDGE PARTNERS

NOTES:
1. PLANS WERE DEVELOPED IN ACCORDANCE WITH THE LATEST LA DOTD STANDARD PLANS AND SPECIAL DETAILS.
2. PROPOSED DUCT BANK SHALL INCLUDE:
   - 2-2" CONDUITS WITH 2-48 COUNT DARK FIBER TRUNKLINES OWNED BY LA DOTD FOR FUTURE USE (DESIGNED AND CONSTRUCTED IN ACCORDANCE WITH LA DOTD STANDARDS AND SPECIFICATIONS).
   - ALL PERMITTED FIBERS (DESIGNED AND CONSTRUCTED IN ACCORDANCE WITH PERMITEE DESIGN REQUIREMENTS).
3. THESE ITS PLANS ONLY SHOW LA DOTD ITS COMPONENTS AND DO NOT ACCOUNT FOR ANY ADDITIONAL CONDUITS, PULL BOXES, FIBERS, ETC. THAT ARE NECESSARY BASED ON PERMITTEE DESIGN REQUIREMENTS WHICH SHALL BE DETERMINED AT A LATER DATE.

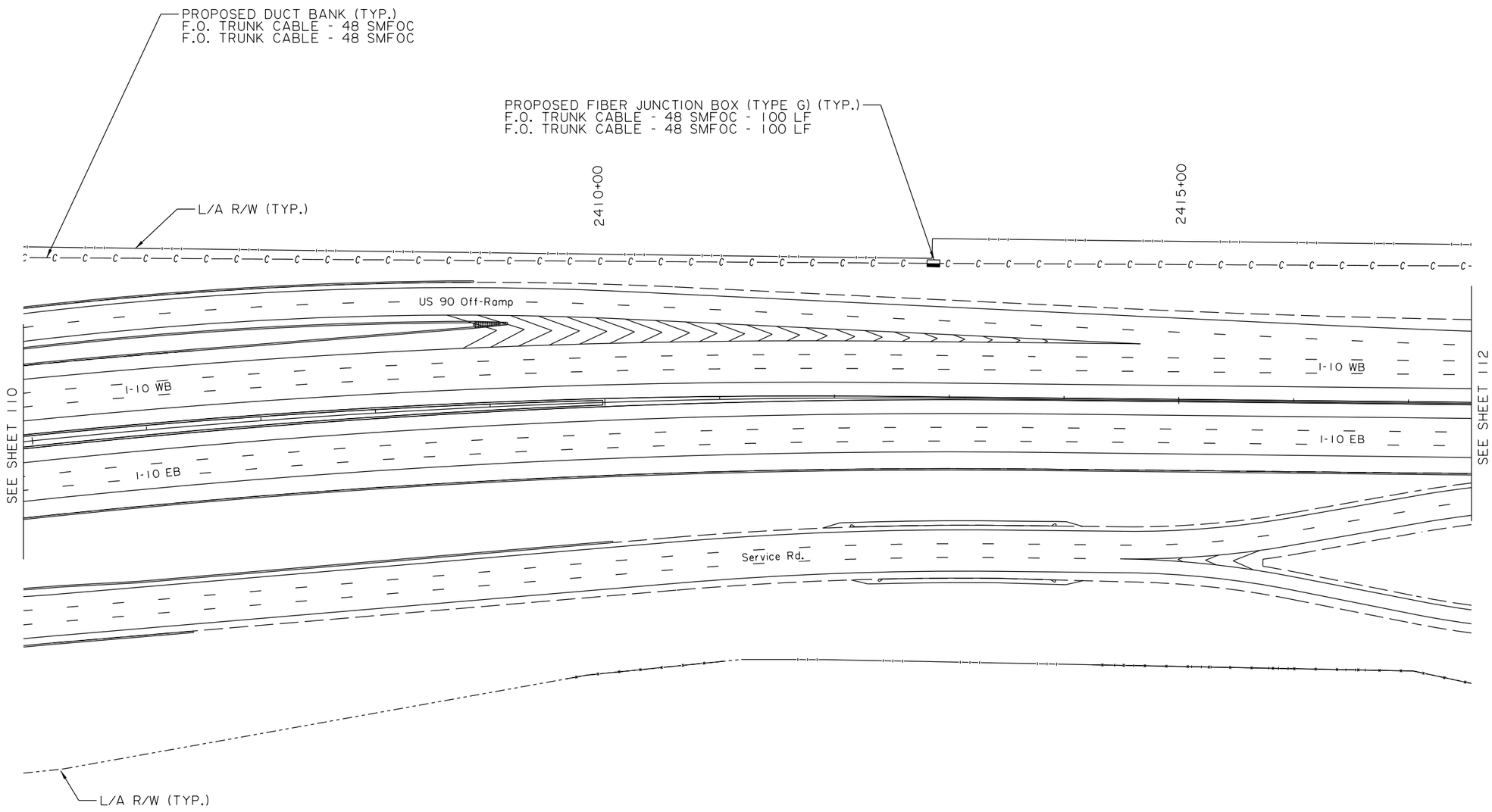

0 50' 100'
SCALE:1"=100'

N

SHEET NUMBER	111
PARISH	CALCASIEU
CONTROL SECTION	450-91
STATE PROJECT	H.003931

DESIGN	K. HULSMAN	DETAIL	K. HULSMAN	REVIEW	SERIES # 12 OF 28
CHECK	C. EVANS	CHECK	C. EVANS		

TECHNICAL PROPOSAL
PRELIMINARY
NOT FOR CONSTRUCTION
ENGINEER: ARI DEITCH
LICENSE #: 41842
DATE: 04/19/2023

NO.	DATE	REVISION OR CHANGE ORDER DESCRIPTION	BY

PROPOSED ITS PLANS

I-10 CALCASIEU RIVER BRIDGE P3

LOUISIANA DEPARTMENT OF TRANSPORTATION & DEVELOPMENT

CALCASIEU BRIDGE PARTNERS

04/19/23

TECHNICAL PROPOSAL

NOTES:
1. PLANS WERE DEVELOPED IN ACCORDANCE WITH THE LATEST LA DOTD STANDARD PLANS AND SPECIAL DETAILS.
2. PROPOSED DUCT BANK SHALL INCLUDE:
   - 2-2" CONDUITS WITH 2-48 COUNT DARK FIBER TRUNKLINES OWNED BY LA DOTD FOR FUTURE USE (DESIGNED AND CONSTRUCTED IN ACCORDANCE WITH LA DOTD STANDARDS AND SPECIFICATIONS).
   - ALL PERMITTED FIBERS (DESIGNED AND CONSTRUCTED IN ACCORDANCE WITH PERMITEE DESIGN REQUIREMENTS).
3. THESE ITS PLANS ONLY SHOW LA DOTD ITS COMPONENTS AND DO NOT ACCOUNT FOR ANY ADDITIONAL CONDUITS, PULL BOXES, FIBERS, ETC. THAT ARE NECESSARY BASED ON PERMITTEE DESIGN REQUIREMENTS WHICH SHALL BE DETERMINED AT A LATER DATE.

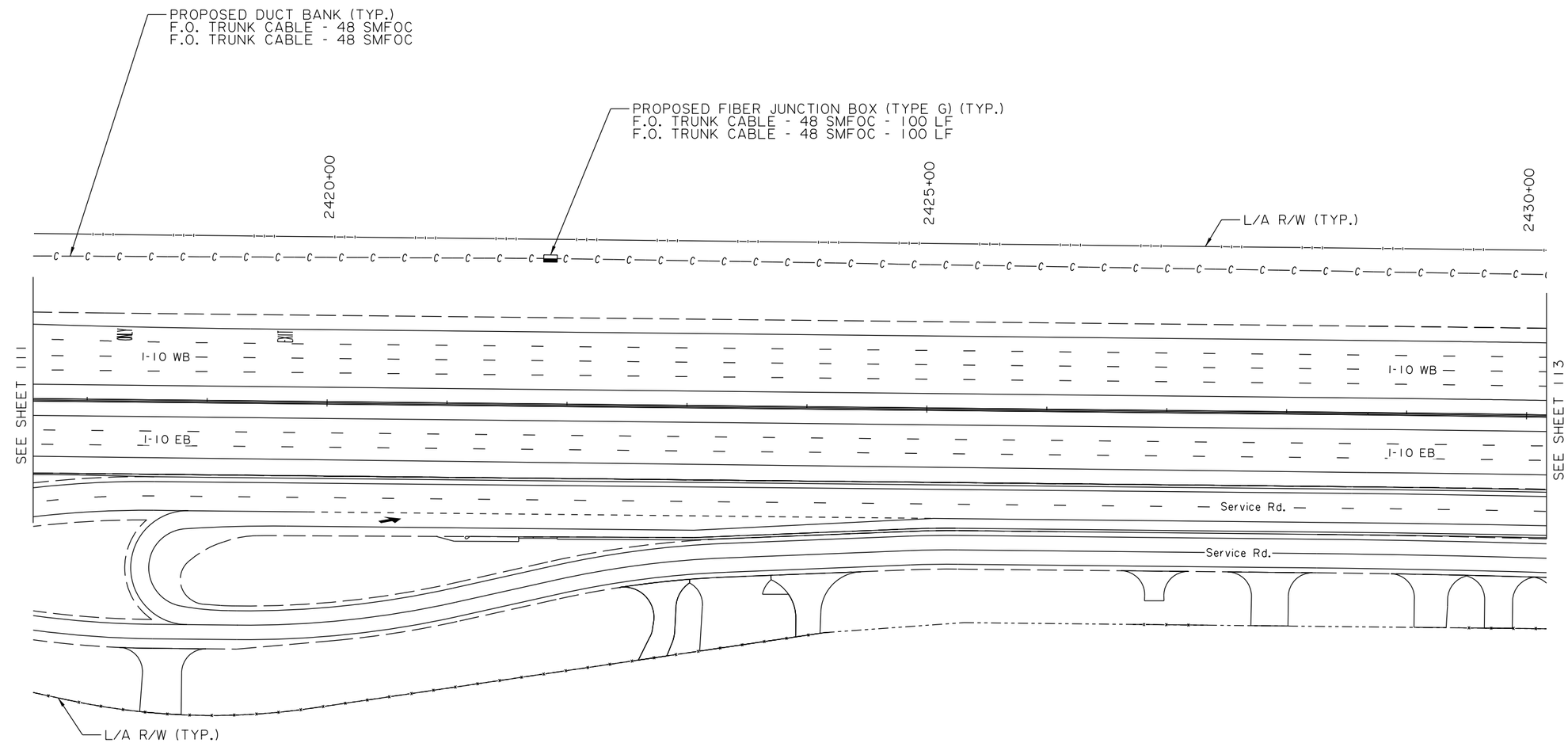

N

0 50' 100'
SCALE:1"=100'

04/19/23

TECHNICAL PROPOSAL

SHEET NUMBER	112		
PARISH	CALCASIEU	CONTROL SECTION	450-91
STATE PROJECT	H.003931		
DESIGN	K. HULSMAN	DETAIL	K. HULSMAN
CHECK	C. EVANS	CHECK	C. EVANS
REVIEW		SERIES #	13 OF 28

TECHNICAL PROPOSAL
PRELIMINARY
NOT FOR CONSTRUCTION
ENGINEER:
ART DEITCH

LICENSE #:
41842

DATE:
04/19/2023

NO.	DATE	REVISION OR CHANGE ORDER DESCRIPTION	BY

PROPOSED ITS PLANS

I-10 CALCASIEU RIVER BRIDGE P3

LOUISIANA DEPARTMENT OF TRANSPORTATION & DEVELOPMENT

CALCASIEU BRIDGE PARTNERS

NOTES:
1. PLANS WERE DEVELOPED IN ACCORDANCE WITH THE LATEST LA DOTD STANDARD PLANS AND SPECIAL DETAILS.
2. PROPOSED DUCT BANK SHALL INCLUDE:
   - 2-2" CONDUITS WITH 2-48 COUNT DARK FIBER TRUNKLINES OWNED BY LA DOTD FOR FUTURE USE (DESIGNED AND CONSTRUCTED IN ACCORDANCE WITH LA DOTD STANDARDS AND SPECIFICATIONS).
   - ALL PERMITTED FIBERS (DESIGNED AND CONSTRUCTED IN ACCORDANCE WITH PERMITEE DESIGN REQUIREMENTS).
3. THESE ITS PLANS ONLY SHOW LA DOTD ITS COMPONENTS AND DO NOT ACCOUNT FOR ANY ADDITIONAL CONDUITS, PULL BOXES, FIBERS, ETC. THAT ARE NECESSARY BASED ON PERMITTEE DESIGN REQUIREMENTS WHICH SHALL BE DETERMINED AT A LATER DATE.

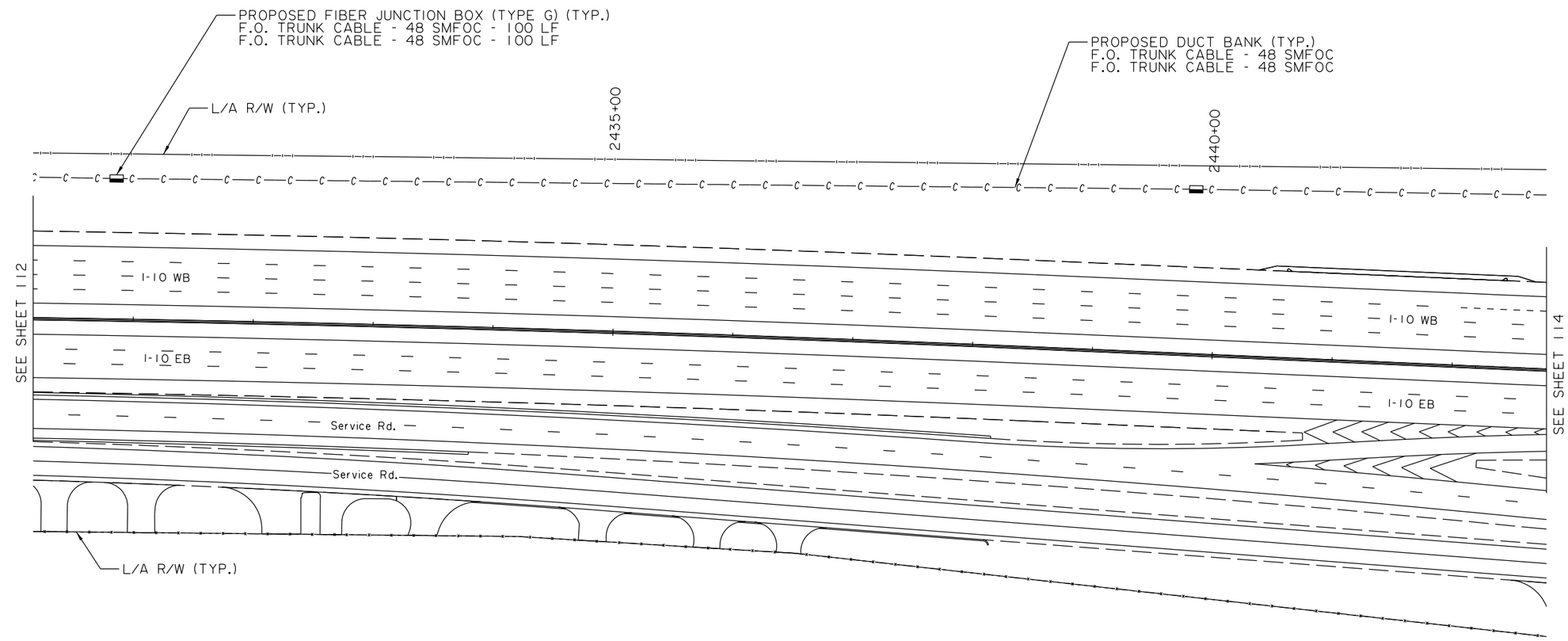

0 50' 100'
SCALE:1"=100'

N

SHEET NUMBER	113

PARISH	CONTROL SECTION	STATE PROJECT
CALCASIEU	450-91	H.003931

	DESIGN	CHECK	DETAIL	CHECK	REVIEW	SERIES
	K. HULSMAN	C. EVANS	K. HULSMAN	C. EVANS		14 OF 28

TECHNICAL PROPOSAL
PRELIMINARY
NOT FOR CONSTRUCTION
ENGINEER: ART DEITCH
LICENSE #: 41842
DATE: 04/19/2023

NO.	DATE	REVISION OR CHANGE ORDER DESCRIPTION	BY

PROPOSED ITS PLANS

I-10 CALCASIEU RIVER BRIDGE P3

LOUISIANA DEPARTMENT OF TRANSPORTATION & DEVELOPMENT

CALCASIEU BRIDGE PARTNERS

04/19/23

TECHNICAL PROPOSAL

NOTES:
1. PLANS WERE DEVELOPED IN ACCORDANCE WITH THE LATEST LA DOTD STANDARD PLANS AND SPECIAL DETAILS.
2. PROPOSED DUCT BANK SHALL INCLUDE:
   - 2-2" CONDUITS WITH 2-48 COUNT DARK FIBER TRUNKLINES OWNED BY LA DOTD FOR FUTURE USE (DESIGNED AND CONSTRUCTED IN ACCORDANCE WITH LA DOTD STANDARDS AND SPECIFICATIONS).
   - ALL PERMITTED FIBERS (DESIGNED AND CONSTRUCTED IN ACCORDANCE WITH PERMITEE DESIGN REQUIREMENTS).
3. THESE ITS PLANS ONLY SHOW LA DOTD ITS COMPONENTS AND DO NOT ACCOUNT FOR ANY ADDITIONAL CONDUITS, PULL BOXES, FIBERS, ETC. THAT ARE NECESSARY BASED ON PERMITTEE DESIGN REQUIREMENTS WHICH SHALL BE DETERMINED AT A LATER DATE.

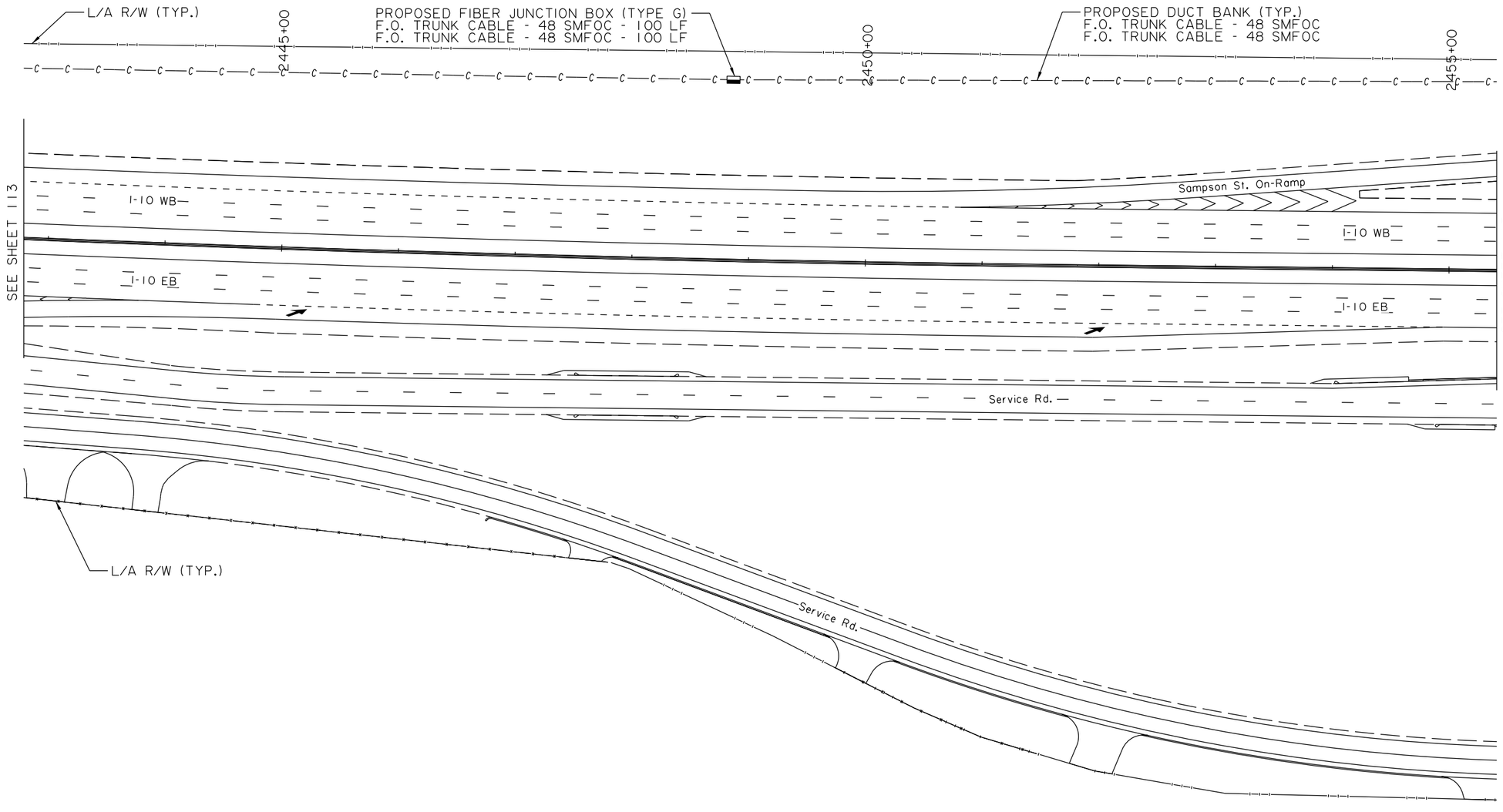

N

0 50' 100'
SCALE: 1"=100'

04/19/23

TECHNICAL PROPOSAL

SHEET NUMBER	114
PARISH	CALCASIEU
CONTROL SECTION	450-91
STATE PROJECT	H.003931

DESIGN	K. HULSMAN	DETAIL	K. HULSMAN
CHECK	C. EVANS	CHECK	C. EVANS
REVIEW	SERIES # 15 OF 28		

TECHNICAL PROPOSAL
PRELIMINARY
NOT FOR CONSTRUCTION
ENGINEER: ART DEITCH
LICENSE #: 41842
DATE: 04/19/2023

NO.	DATE	REVISION OR CHANGE ORDER DESCRIPTION	BY

PROPOSED ITS PLANS

I-10 CALCASIEU RIVER BRIDGE P3

DOTD LOUISIANA DEPARTMENT OF TRANSPORTATION & DEVELOPMENT

CBP CALCASIEU BRIDGE PARTNERS

NOTES:
1. PLANS WERE DEVELOPED IN ACCORDANCE WITH THE LATEST LA DOTD STANDARD PLANS AND SPECIAL DETAILS.
2. PROPOSED DUCT BANK SHALL INCLUDE:
   - 2-2" CONDUITS WITH 2-48 COUNT DARK FIBER TRUNKLINES OWNED BY LA DOTD FOR FUTURE USE (DESIGNED AND CONSTRUCTED IN ACCORDANCE WITH LA DOTD STANDARDS AND SPECIFICATIONS).
   - ALL PERMITTED FIBERS (DESIGNED AND CONSTRUCTED IN ACCORDANCE WITH PERMITTEE DESIGN REQUIREMENTS).
3. THESE ITS PLANS ONLY SHOW LA DOTD ITS COMPONENTS AND DO NOT ACCOUNT FOR ANY ADDITIONAL CONDUITS, PULL BOXES, FIBERS, ETC. THAT ARE NECESSARY BASED ON PERMITTEE DESIGN REQUIREMENTS WHICH SHALL BE DETERMINED AT A LATER DATE.

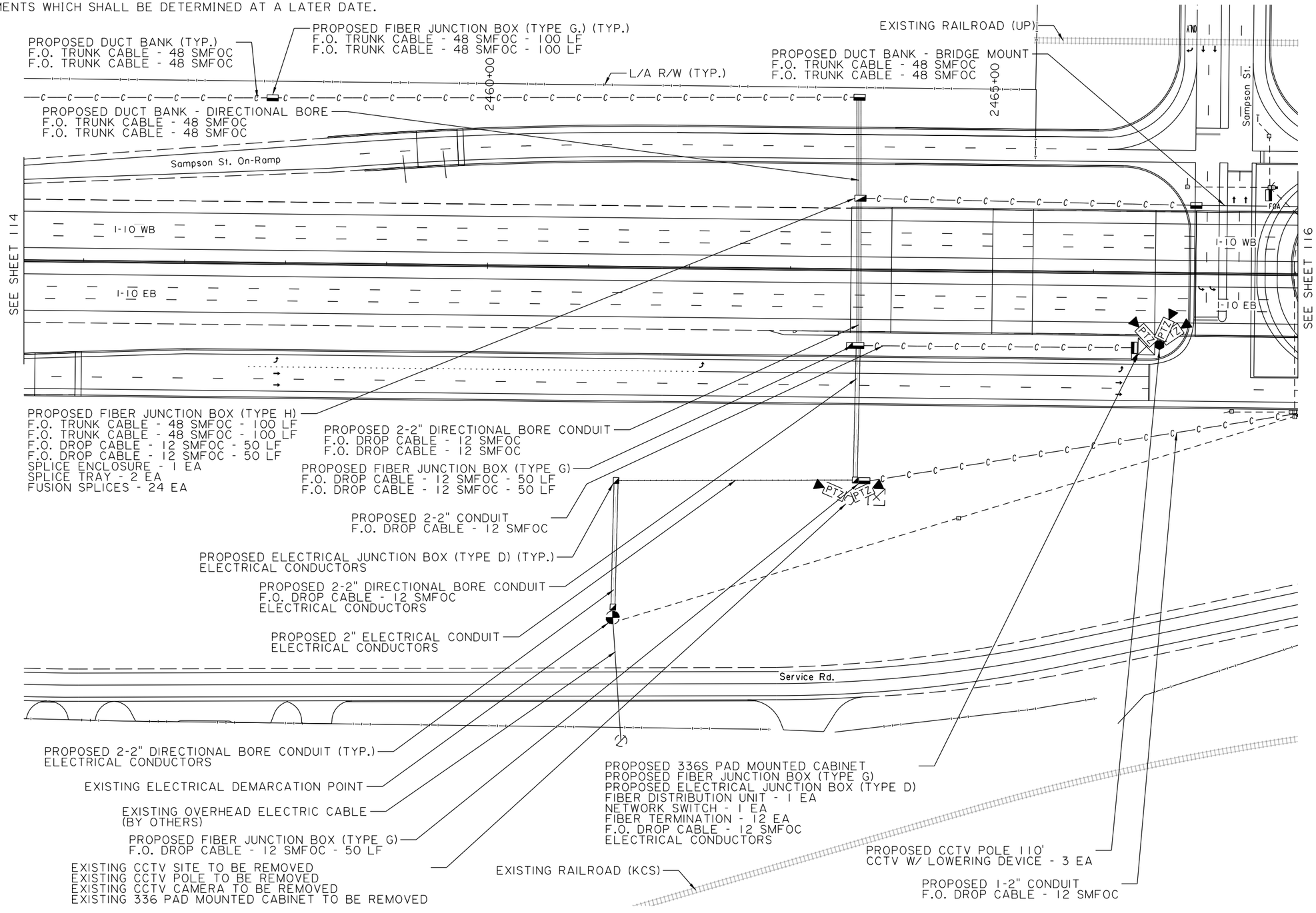

SHEET NUMBER	115
PARISH	CALCASIEU
CONTROL SECTION	450-91
STATE PROJECT	H.003931

DESIGN	K. HULSMAN
CHECK	C. EVANS
DETAIL	K. HULSMAN
CHECK	C. EVANS
REVIEW	
SERIES #	19 OF 28

TECHNICAL PROPOSAL
PRELIMINARY
NOT FOR CONSTRUCTION
ENGINEER: ART DEITCH
LICENSE #: 41842
DATE: 04/19/2023

NO.	DATE	REVISION OR CHANGE ORDER DESCRIPTION	BY

PROPOSED ITS PLANS

I-10 CALCASIEU RIVER BRIDGE P3

DOTD LOUISIANA DEPARTMENT OF TRANSPORTATION & DEVELOPMENT

CBP CALCASIEU BRIDGE PARTNERS

04/19/23

TECHNICAL PROPOSAL

NOTES:
1. PLANS WERE DEVELOPED IN ACCORDANCE WITH THE LATEST LA DOTD STANDARD PLANS AND SPECIAL DETAILS.
2. PROPOSED DUCT BANK SHALL INCLUDE:
   - 2-2" CONDUITS WITH 2-48 COUNT DARK FIBER TRUNKLINES OWNED BY LA DOTD FOR FUTURE USE (DESIGNED AND CONSTRUCTED IN ACCORDANCE WITH LA DOTD STANDARDS AND SPECIFICATIONS).
   - ALL PERMITTED FIBERS (DESIGNED AND CONSTRUCTED IN ACCORDANCE WITH PERMITEE DESIGN REQUIREMENTS).
3. THESE ITS PLANS ONLY SHOW LA DOTD ITS COMPONENTS AND DO NOT ACCOUNT FOR ANY ADDITIONAL CONDUITS, PULL BOXES, FIBERS, ETC. THAT ARE NECESSARY BASED ON PERMITTEE DESIGN REQUIREMENTS WHICH SHALL BE DETERMINED AT A LATER DATE.

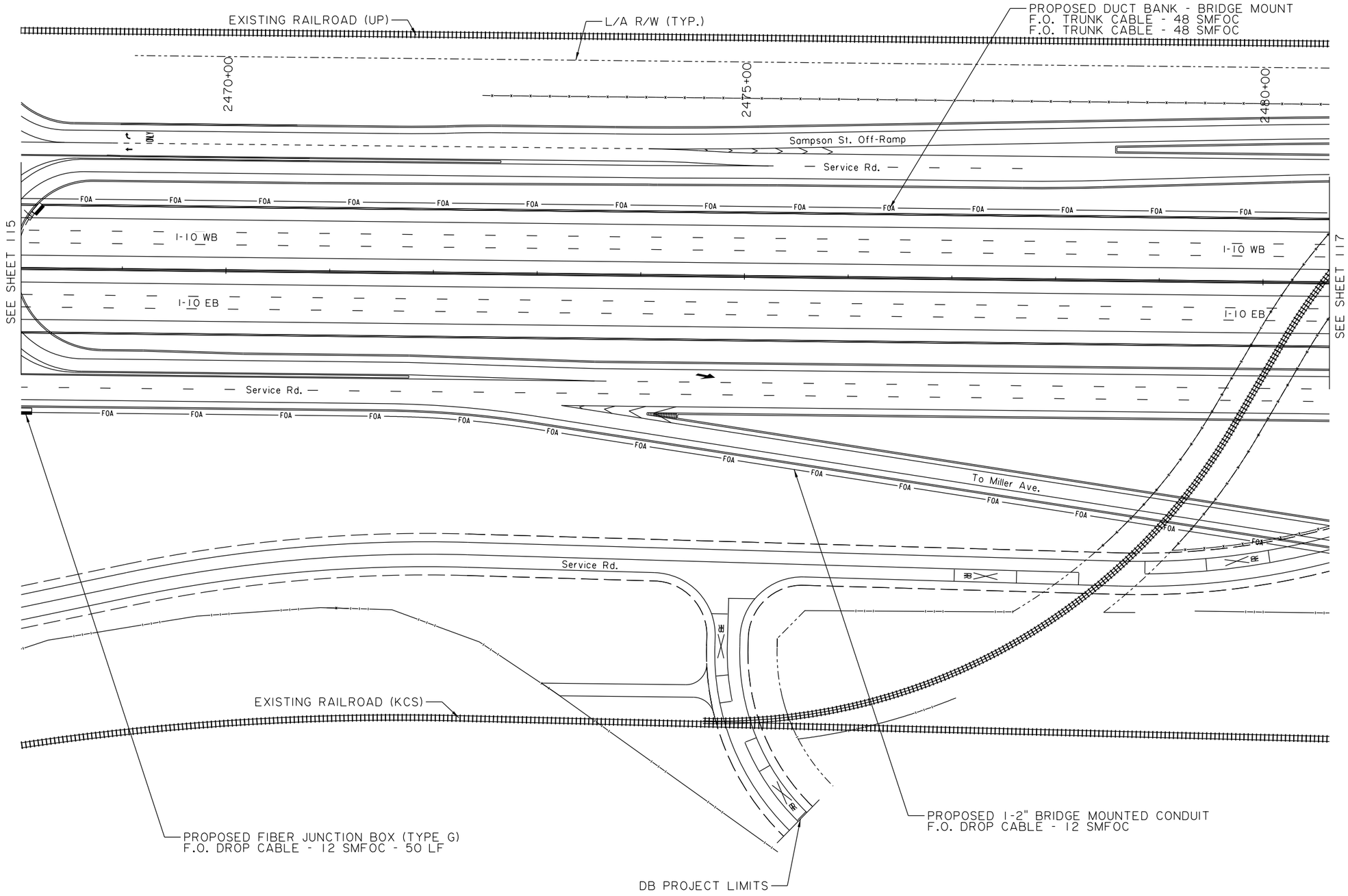

N

0 50' 100'
SCALE:1"=100'

SHEET NUMBER	116

PARISH	CONTROL SECTION	STATE PROJECT
CALCASIEU	450-91	H.003931

DESIGN	K. HULSMAN	DETAIL	K. HULSMAN	REVIEW	SERIES # 17 OF 28
CHECK	C. EVANS	CHECK	C. EVANS		

TECHNICAL PROPOSAL
PRELIMINARY
NOT FOR CONSTRUCTION
ENGINEER: ART DEITCH
LICENSE #: 41842
DATE: 04/19/2023

NO.	DATE	REVISION OR CHANGE ORDER DESCRIPTION	BY

PROPOSED ITS PLANS

I-10 CALCASIEU RIVER BRIDGE P3

DOTD LOUISIANA DEPARTMENT OF TRANSPORTATION & DEVELOPMENT

CBP CALCASIEU BRIDGE PARTNERS

04/19/23

TECHNICAL PROPOSAL

NOTES:
1. PLANS WERE DEVELOPED IN ACCORDANCE WITH THE LATEST LA DOTD STANDARD PLANS AND SPECIAL DETAILS.
2. PROPOSED DUCT BANK SHALL INCLUDE:
   - 2-2" CONDUITS WITH 2-48 COUNT DARK FIBER TRUNKLINES OWNED BY LA DOTD FOR FUTURE USE (DESIGNED AND CONSTRUCTED IN ACCORDANCE WITH LA DOTD STANDARDS AND SPECIFICATIONS).
   - ALL PERMITTED FIBERS (DESIGNED AND CONSTRUCTED IN ACCORDANCE WITH PERMITEE DESIGN REQUIREMENTS).
3. THESE ITS PLANS ONLY SHOW LA DOTD ITS COMPONENTS AND DO NOT ACCOUNT FOR ANY ADDITIONAL CONDUITS, PULL BOXES, FIBERS, ETC. THAT ARE NECESSARY BASED ON PERMITTEE DESIGN REQUIREMENTS WHICH SHALL BE DETERMINED AT A LATER DATE.

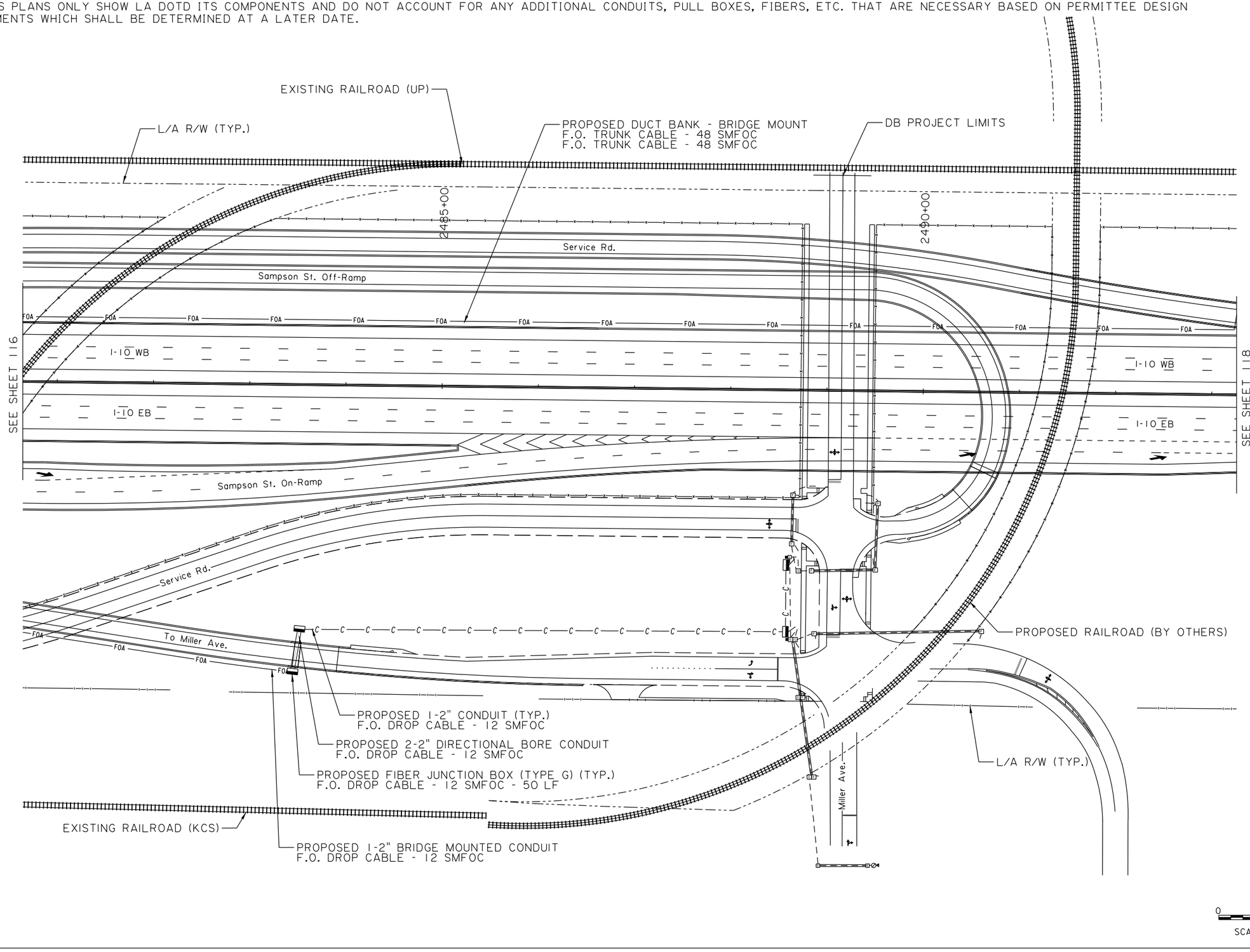

TECHNICAL PROPOSAL

04/19/23

SHEET NUMBER	117
PARISH	CALCASIEU
CONTROL SECTION	450-91
STATE PROJECT	H.003931

DESIGN	K. HULSMAN	DETAIL	K. HULSMAN	SERIES # 18 OF 28
CHECK	C. EVANS	CHECK	C. EVANS	
REVIEW				

TECHNICAL PROPOSAL
PRELIMINARY
NOT FOR CONSTRUCTION
ENGINEER: ART DEITCH
LICENSE #: 41842
DATE: 04/19/2023

NO.	DATE	REVISION OR CHANGE ORDER DESCRIPTION	BY

PROPOSED ITS PLANS

I-10 CALCASIEU RIVER BRIDGE P3

DOTD LOUISIANA DEPARTMENT OF TRANSPORTATION & DEVELOPMENT

CBP CALCASIEU BRIDGE PARTNERS

NOTES:
1. PLANS WERE DEVELOPED IN ACCORDANCE WITH THE LATEST LA DOTD STANDARD PLANS AND SPECIAL DETAILS.
2. PROPOSED DUCT BANK SHALL INCLUDE:
   - 2-2" CONDUITS WITH 2-48 COUNT DARK FIBER TRUNKLINES OWNED BY LA DOTD FOR FUTURE USE (DESIGNED AND CONSTRUCTED IN ACCORDANCE WITH LA DOTD STANDARDS AND SPECIFICATIONS).
   - ALL PERMITTED FIBERS (DESIGNED AND CONSTRUCTED IN ACCORDANCE WITH PERMITEE DESIGN REQUIREMENTS).
3. THESE ITS PLANS ONLY SHOW LA DOTD ITS COMPONENTS AND DO NOT ACCOUNT FOR ANY ADDITIONAL CONDUITS, PULL BOXES, FIBERS, ETC. THAT ARE NECESSARY BASED ON PERMITTEE DESIGN REQUIREMENTS WHICH SHALL BE DETERMINED AT A LATER DATE.

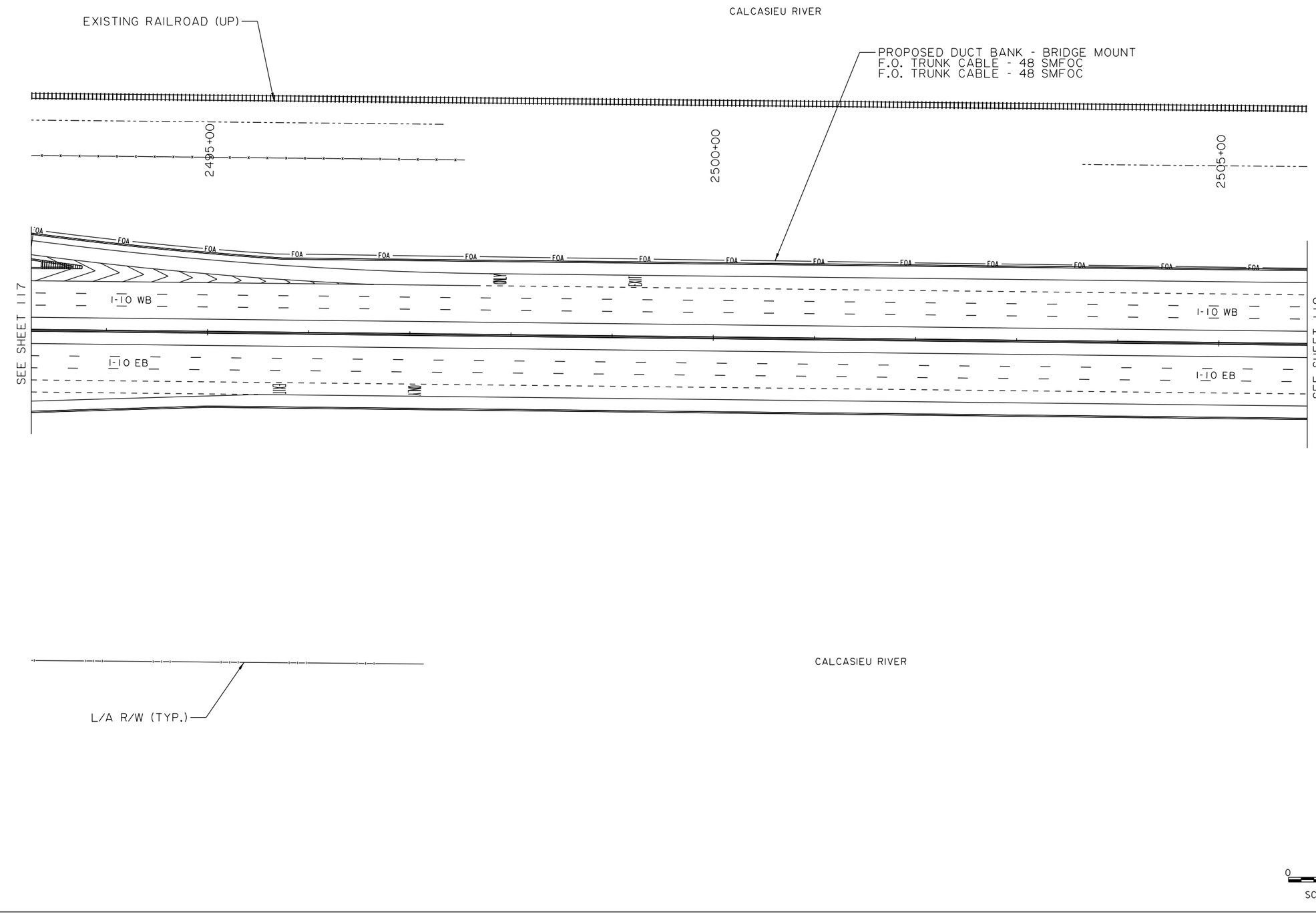

0 50' 100'
SCALE:1"=100'

N

SHEET NUMBER	118
PARISH	CALCASIEU
CONTROL SECTION	450-91
STATE PROJECT	H.003931

DESIGN	K. HULSMAN	DETAIL	K. HULSMAN
CHECK	C. EVANS	CHECK	C. EVANS
REVIEW		SERIES #	19 OF 28

TECHNICAL PROPOSAL
PRELIMINARY
NOT FOR CONSTRUCTION
ENGINEER: ART DEITCH
LICENSE #: 41842
DATE: 04/19/2023

NO.	DATE	REVISION OR CHANGE ORDER DESCRIPTION	BY

PROPOSED ITS PLANS

I-10 CALCASIEU RIVER BRIDGE P3

LOUISIANA DEPARTMENT OF TRANSPORTATION & DEVELOPMENT

CALCASIEU BRIDGE PARTNERS

04/19/23

TECHNICAL PROPOSAL

NOTES:
1. PLANS WERE DEVELOPED IN ACCORDANCE WITH THE LATEST LA DOTD STANDARD PLANS AND SPECIAL DETAILS.
2. PROPOSED DUCT BANK SHALL INCLUDE:
   - 2-2" CONDUITS WITH 2-48 COUNT DARK FIBER TRUNKLINES OWNED BY LA DOTD FOR FUTURE USE (DESIGNED AND CONSTRUCTED IN ACCORDANCE WITH LA DOTD STANDARDS AND SPECIFICATIONS).
   - ALL PERMITTED FIBERS (DESIGNED AND CONSTRUCTED IN ACCORDANCE WITH PERMITEE DESIGN REQUIREMENTS).
3. THESE ITS PLANS ONLY SHOW LA DOTD ITS COMPONENTS AND DO NOT ACCOUNT FOR ANY ADDITIONAL CONDUITS, PULL BOXES, FIBERS, ETC. THAT ARE NECESSARY BASED ON PERMITTEE DESIGN REQUIREMENTS WHICH SHALL BE DETERMINED AT A LATER DATE.

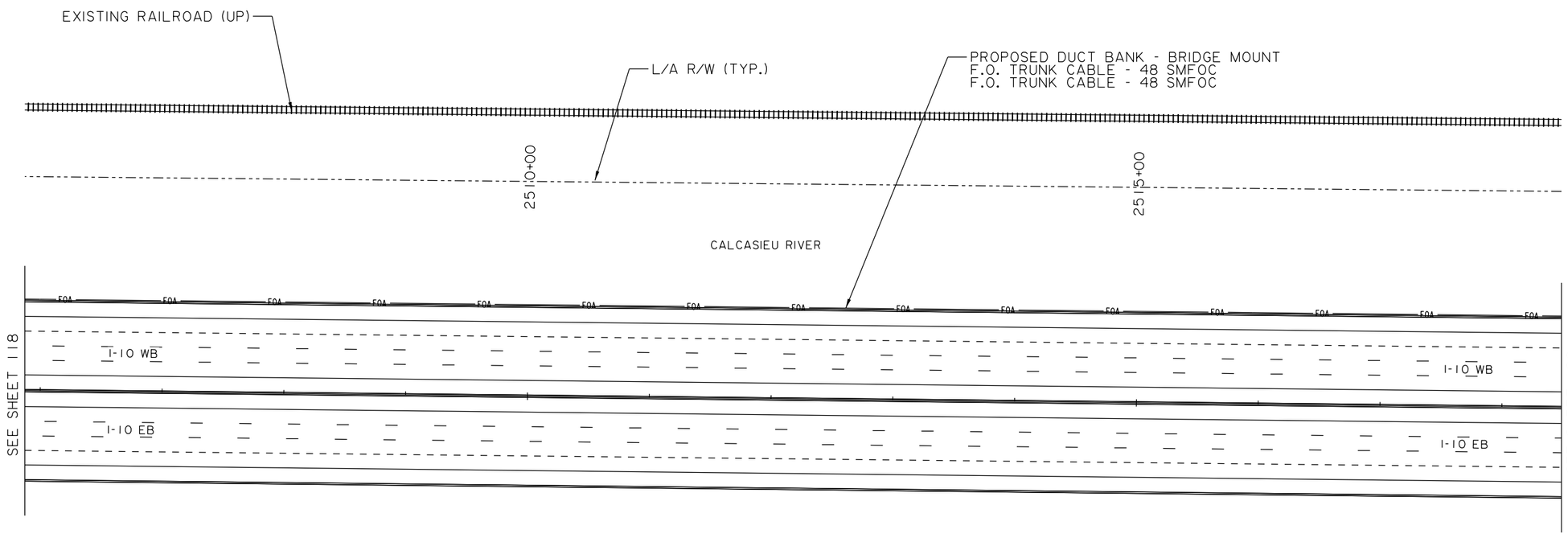

CALCASIEU RIVER

0 50' 100'
SCALE:1"=100'

N

SHEET NUMBER	119
PARISH	CALCASIEU
CONTROL SECTION	450-91
STATE PROJECT	H.003931

DESIGN	K. HULSMAN	DETAIL	K. HULSMAN	REVIEW	SERIES # 20 OF 28
CHECK	C. EVANS	CHECK	C. EVANS		

TECHNICAL PROPOSAL
PRELIMINARY
NOT FOR CONSTRUCTION
ENGINEER: ART DEITCH
LICENSE #: 41842
DATE: 04/19/2023

NO.	DATE	REVISION OR CHANGE ORDER DESCRIPTION	BY

PROPOSED ITS PLANS

I-10 CALCASIEU RIVER BRIDGE P3

LOUISIANA DEPARTMENT OF TRANSPORTATION & DEVELOPMENT

CALCASIEU BRIDGE PARTNERS

04/19/23

TECHNICAL PROPOSAL

NOTES:
1. PLANS WERE DEVELOPED IN ACCORDANCE WITH THE LATEST LA DOTD STANDARD PLANS AND SPECIAL DETAILS.
2. PROPOSED DUCT BANK SHALL INCLUDE:
   - 2-2" CONDUITS WITH 2-48 COUNT DARK FIBER TRUNKLINES OWNED BY LA DOTD FOR FUTURE USE (DESIGNED AND CONSTRUCTED IN ACCORDANCE WITH LA DOTD STANDARDS AND SPECIFICATIONS).
   - ALL PERMITTED FIBERS (DESIGNED AND CONSTRUCTED IN ACCORDANCE WITH PERMITEE DESIGN REQUIREMENTS).
3. THESE ITS PLANS ONLY SHOW LA DOTD ITS COMPONENTS AND DO NOT ACCOUNT FOR ANY ADDITIONAL CONDUITS, PULL BOXES, FIBERS, ETC. THAT ARE NECESSARY BASED ON PERMITTEE DESIGN REQUIREMENTS WHICH SHALL BE DETERMINED AT A LATER DATE.

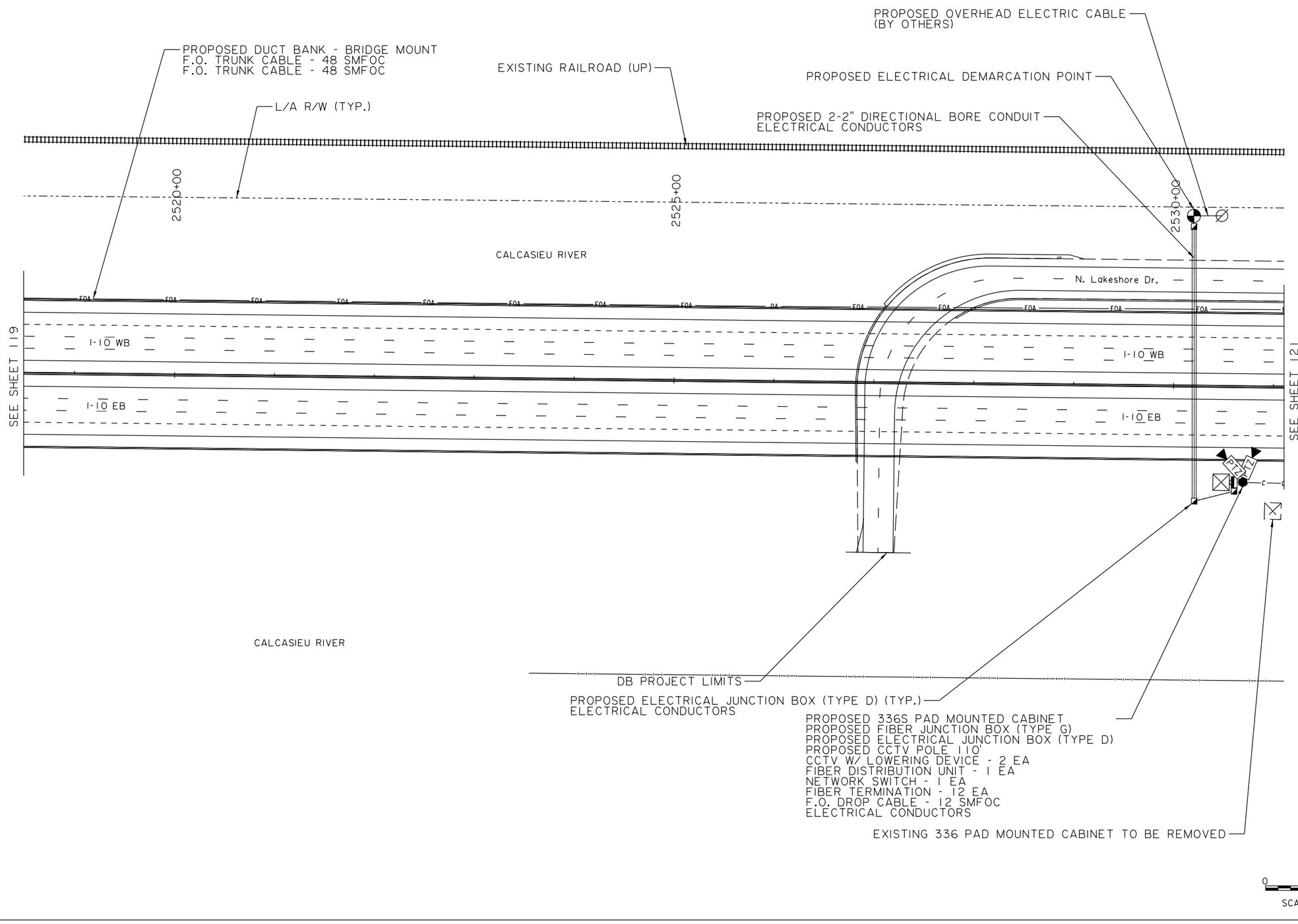

N

04/19/23

TECHNICAL PROPOSAL

SHEET NUMBER	120
PARISH	CALCASIEU
CONTROL SECTION	450-91
STATE PROJECT	H.003931

DESIGN	K. HULSMAN
CHECK	C. EVANS
DETAIL	K. HULSMAN
CHECK	C. EVANS
REVIEW	
SERIES #	21 OF 28

TECHNICAL PROPOSAL
PRELIMINARY
NOT FOR CONSTRUCTION
ENGINEER: ART DEITCH
LICENSE #: 41842
DATE: 04/19/2023

NO.	DATE	REVISION OR CHANGE ORDER DESCRIPTION	BY

PROPOSED ITS PLANS

I-10 CALCASIEU RIVER BRIDGE P3

DOTD LOUISIANA DEPARTMENT OF TRANSPORTATION & DEVELOPMENT

CBP CALCASIEU BRIDGE PARTNERS

NOTES:
1. PLANS WERE DEVELOPED IN ACCORDANCE WITH THE LATEST LA DOTD STANDARD PLANS AND SPECIAL DETAILS.
2. PROPOSED DUCT BANK SHALL INCLUDE:
   - 2-2" CONDUITS WITH 2-48 COUNT DARK FIBER TRUNKLINES OWNED BY LA DOTD FOR FUTURE USE (DESIGNED AND CONSTRUCTED IN ACCORDANCE WITH LA DOTD STANDARDS AND SPECIFICATIONS).
   - ALL PERMITTED FIBERS (DESIGNED AND CONSTRUCTED IN ACCORDANCE WITH PERMITTEE DESIGN REQUIREMENTS).
3. THESE ITS PLANS ONLY SHOW LA DOTD ITS COMPONENTS AND DO NOT ACCOUNT FOR ANY ADDITIONAL CONDUITS, PULL BOXES, FIBERS, ETC. THAT ARE NECESSARY BASED ON PERMITTEE DESIGN REQUIREMENTS WHICH SHALL BE DETERMINED AT A LATER DATE.

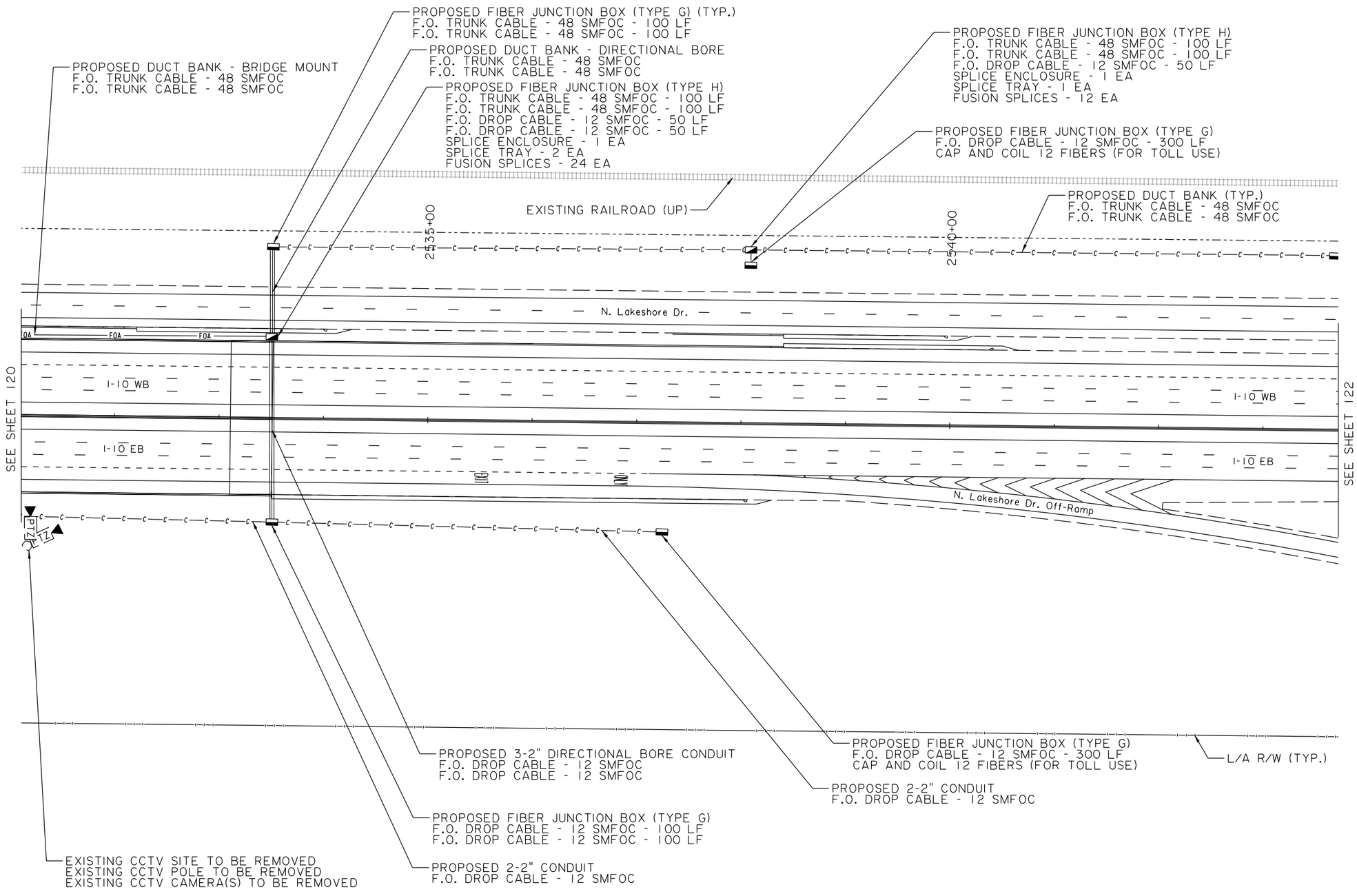

0 50′ 100′
SCALE:1"=100′

N

04/19/23

TECHNICAL PROPOSAL

SHEET NUMBER	121
PARISH	CALCASIEU
CONTROL SECTION	450-91
STATE PROJECT	H.003931

DESIGN	K. HULSMAN	DETAIL	K. HULSMAN
CHECK	C. EVANS	CHECK	C. EVANS
REVIEW		SERIES	22 OF 28

TECHNICAL PROPOSAL
PRELIMINARY
NOT FOR CONSTRUCTION
ENGINEER:
ART DEITCH
LICENSE #:
41842
DATE:
04/19/2023

NO.	DATE	REVISION OR CHANGE ORDER DESCRIPTION	BY

PROPOSED ITS PLANS

I-10 CALCASIEU RIVER BRIDGE P3

LOUISIANA DEPARTMENT OF TRANSPORTATION & DEVELOPMENT

CALCASIEU BRIDGE PARTNERS

NOTES:
1. PLANS WERE DEVELOPED IN ACCORDANCE WITH THE LATEST LA DOTD STANDARD PLANS AND SPECIAL DETAILS.
2. PROPOSED DUCT BANK SHALL INCLUDE:
   - 2-2" CONDUITS WITH 2-48 COUNT DARK FIBER TRUNKLINES OWNED BY LA DOTD FOR FUTURE USE (DESIGNED AND CONSTRUCTED IN ACCORDANCE WITH LA DOTD STANDARDS AND SPECIFICATIONS).
   - ALL PERMITTED FIBERS (DESIGNED AND CONSTRUCTED IN ACCORDANCE WITH PERMITEE DESIGN REQUIREMENTS).
3. THESE ITS PLANS ONLY SHOW LA DOTD ITS COMPONENTS AND DO NOT ACCOUNT FOR ANY ADDITIONAL CONDUITS, PULL BOXES, FIBERS, ETC. THAT ARE NECESSARY BASED ON PERMITTEE DESIGN REQUIREMENTS WHICH SHALL BE DETERMINED AT A LATER DATE.

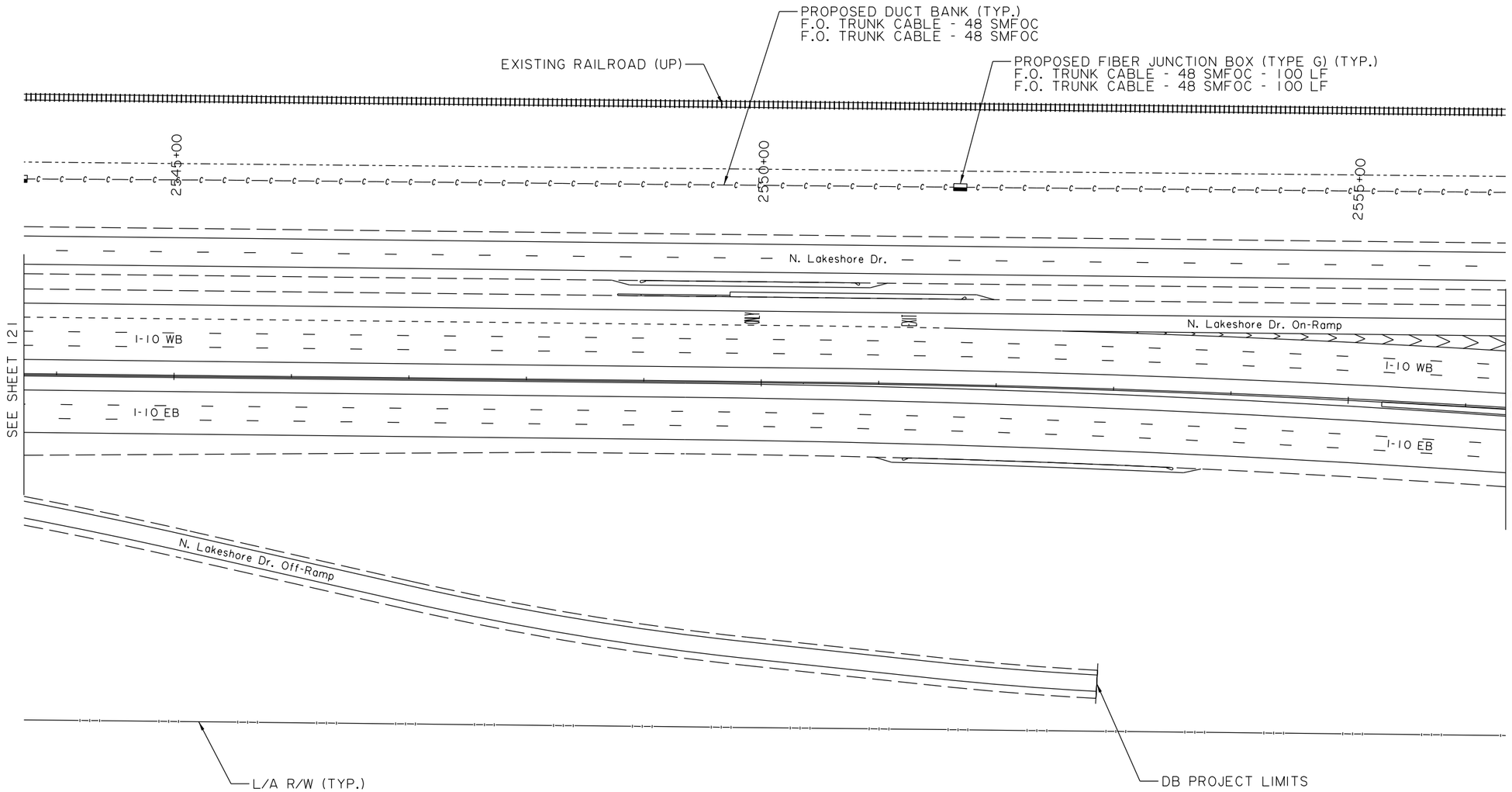

N

0 50' 100'
SCALE: 1"=100'

SHEET NUMBER	122
PARISH	CALCASIEU
CONTROL SECTION	450-91
STATE PROJECT	H.003931

DESIGN	K. HULSMAN	DETAIL	K. HULSMAN	REVIEW	SERIES # 23 OF 28
CHECK	C. EVANS	CHECK	C. EVANS		

TECHNICAL PROPOSAL
PRELIMINARY
NOT FOR CONSTRUCTION
ENGINEER: ARI DEITCH
LICENSE #: 41842
DATE: 04/19/2023

NO.	DATE	REVISION OR CHANGE ORDER DESCRIPTION	BY

PROPOSED ITS PLANS

I-10 CALCASIEU RIVER BRIDGE P3

LOUISIANA DEPARTMENT OF TRANSPORTATION & DEVELOPMENT

CALCASIEU BRIDGE PARTNERS

04/19/23

TECHNICAL PROPOSAL

NOTES:
1. PLANS WERE DEVELOPED IN ACCORDANCE WITH THE LATEST LA DOTD STANDARD PLANS AND SPECIAL DETAILS.
2. PROPOSED DUCT BANK SHALL INCLUDE:
   - 2-2" CONDUITS WITH 2-48 COUNT DARK FIBER TRUNKLINES OWNED BY LA DOTD FOR FUTURE USE (DESIGNED AND CONSTRUCTED IN ACCORDANCE WITH LA DOTD STANDARDS AND SPECIFICATIONS).
   - ALL PERMITTED FIBERS (DESIGNED AND CONSTRUCTED IN ACCORDANCE WITH PERMITEE DESIGN REQUIREMENTS).
3. THESE ITS PLANS ONLY SHOW LA DOTD ITS COMPONENTS AND DO NOT ACCOUNT FOR ANY ADDITIONAL CONDUITS, PULL BOXES, FIBERS, ETC. THAT ARE NECESSARY BASED ON PERMITTEE DESIGN REQUIREMENTS WHICH SHALL BE DETERMINED AT A LATER DATE.

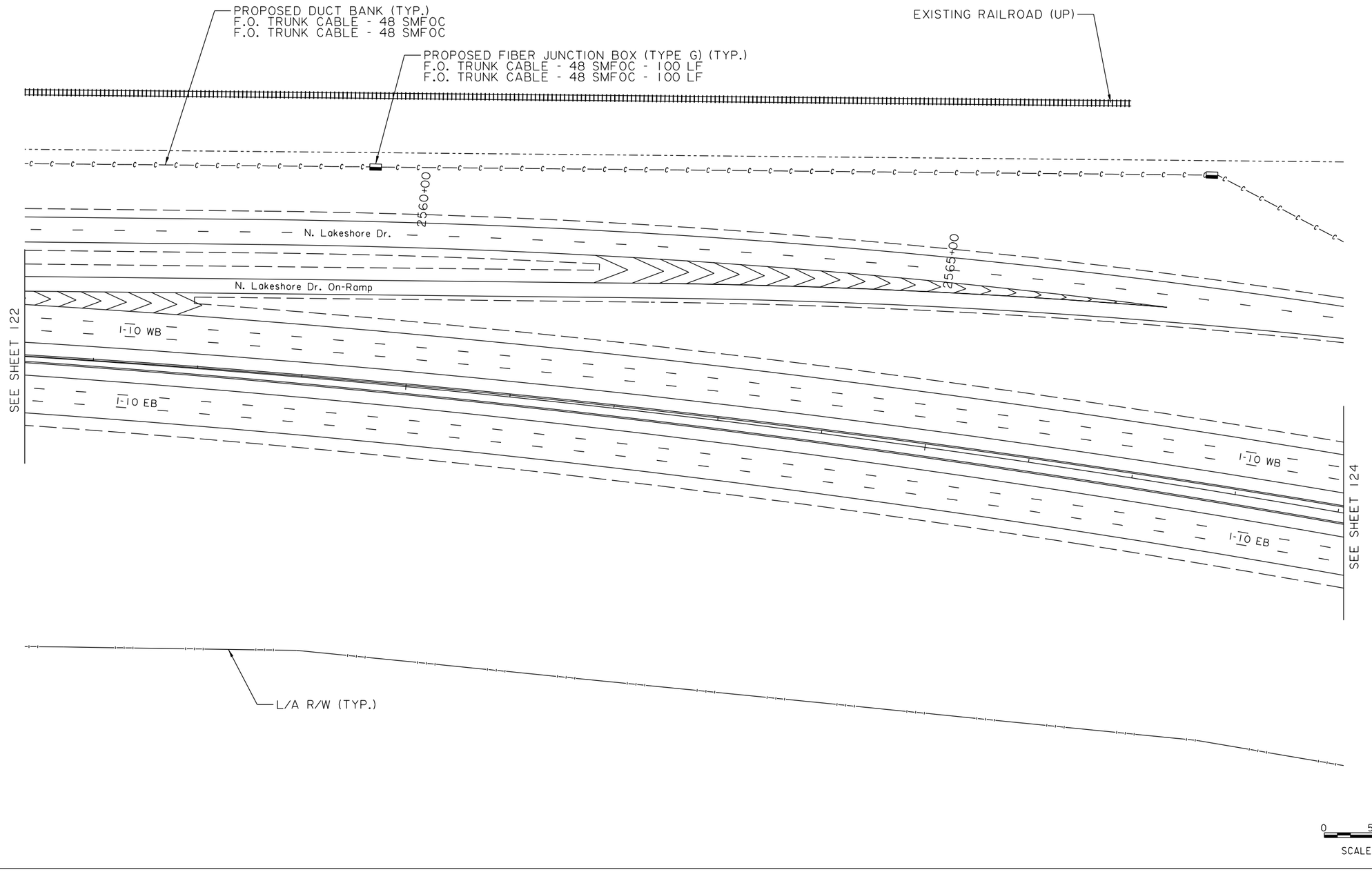

N

0 50' 100'
SCALE:1"=100'

04/19/23

TECHNICAL PROPOSAL

SHEET NUMBER	123
PARISH	CALCASIEU
CONTROL SECTION	450-91
STATE PROJECT	H.003931
DESIGN	K. HULSMAN
CHECK	C. EVANS
DETAIL	K. HULSMAN
CHECK	C. EVANS
REVIEW	
SERIES #	24 OF 28

TECHNICAL PROPOSAL
PRELIMINARY
NOT FOR CONSTRUCTION
ENGINEER: ART DEITCH
LICENSE #: 41842
DATE: 04/19/2023

NO.	DATE	REVISION OR CHANGE ORDER DESCRIPTION	BY

PROPOSED ITS PLANS

I-10 CALCASIEU RIVER BRIDGE P3

DOTD LOUISIANA DEPARTMENT OF TRANSPORTATION & DEVELOPMENT

CBP CALCASIEU BRIDGE PARTNERS

NOTES:
1. PLANS WERE DEVELOPED IN ACCORDANCE WITH THE LATEST LA DOTD STANDARD PLANS AND SPECIAL DETAILS.
2. PROPOSED DUCT BANK SHALL INCLUDE:
   - 2-2" CONDUITS WITH 2-48 COUNT DARK FIBER TRUNKLINES OWNED BY LA DOTD FOR FUTURE USE (DESIGNED AND CONSTRUCTED IN ACCORDANCE WITH LA DOTD STANDARDS AND SPECIFICATIONS).
   - ALL PERMITTED FIBERS (DESIGNED AND CONSTRUCTED IN ACCORDANCE WITH PERMITEE DESIGN REQUIREMENTS).
3. THESE ITS PLANS ONLY SHOW LA DOTD ITS COMPONENTS AND DO NOT ACCOUNT FOR ANY ADDITIONAL CONDUITS, PULL BOXES, FIBERS, ETC. THAT ARE NECESSARY BASED ON PERMITTEE DESIGN REQUIREMENTS WHICH SHALL BE DETERMINED AT A LATER DATE.

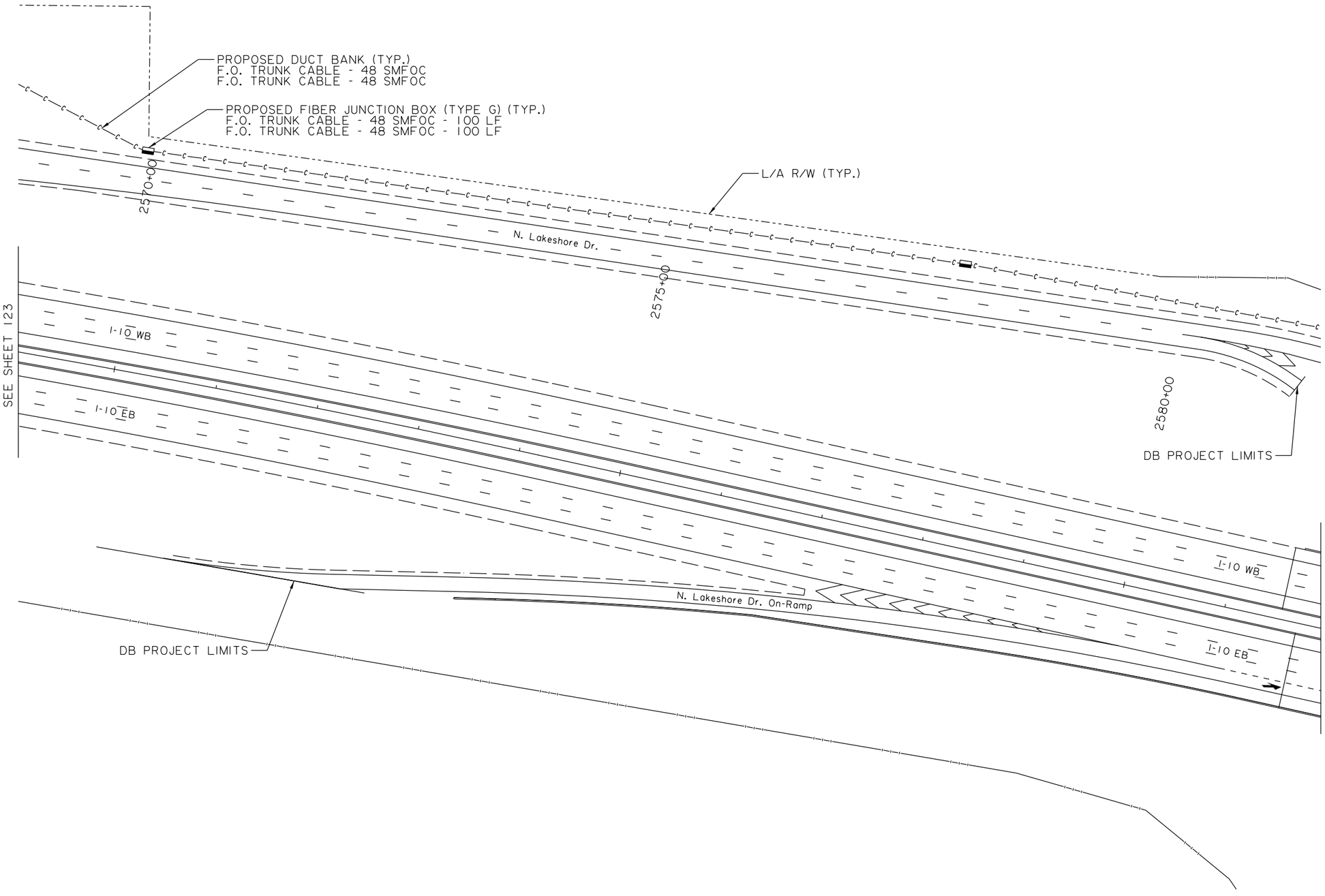

N

0 50' 100'
SCALE: 1"=100'

04/19/23

TECHNICAL PROPOSAL

SHEET NUMBER	124
PARISH	CALCASIEU
CONTROL SECTION	450-91
STATE PROJECT	H.003931

DESIGN	K. HULSMAN	DETAIL	K. HULSMAN	REVIEW	SERIES # 25 OF 28
CHECK	C. EVANS	CHECK	C. EVANS		

TECHNICAL PROPOSAL
PRELIMINARY
NOT FOR CONSTRUCTION
ENGINEER: ART DEITCH
LICENSE #: 41842
DATE: 04/19/2023

NO.	DATE	REVISION OR CHANGE ORDER DESCRIPTION	BY

PROPOSED ITS PLANS

I-10 CALCASIEU RIVER BRIDGE P3

DOTD LOUISIANA DEPARTMENT OF TRANSPORTATION & DEVELOPMENT

CBP CALCASIEU BRIDGE PARTNERS

NOTES:
1. PLANS WERE DEVELOPED IN ACCORDANCE WITH THE LATEST LA DOTD STANDARD PLANS AND SPECIAL DETAILS.
2. PROPOSED DUCT BANK SHALL INCLUDE:
   - 2-2" CONDUITS WITH 2-48 COUNT DARK FIBER TRUNKLINES OWNED BY LA DOTD FOR FUTURE USE (DESIGNED AND CONSTRUCTED IN ACCORDANCE WITH LA DOTD STANDARDS AND SPECIFICATIONS).
   - ALL PERMITTED FIBERS (DESIGNED AND CONSTRUCTED IN ACCORDANCE WITH PERMITEE DESIGN REQUIREMENTS).
3. THESE ITS PLANS ONLY SHOW LA DOTD ITS COMPONENTS AND DO NOT ACCOUNT FOR ANY ADDITIONAL CONDUITS, PULL BOXES, FIBERS, ETC. THAT ARE NECESSARY BASED ON PERMITTEE DESIGN REQUIREMENTS WHICH SHALL BE DETERMINED AT A LATER DATE.

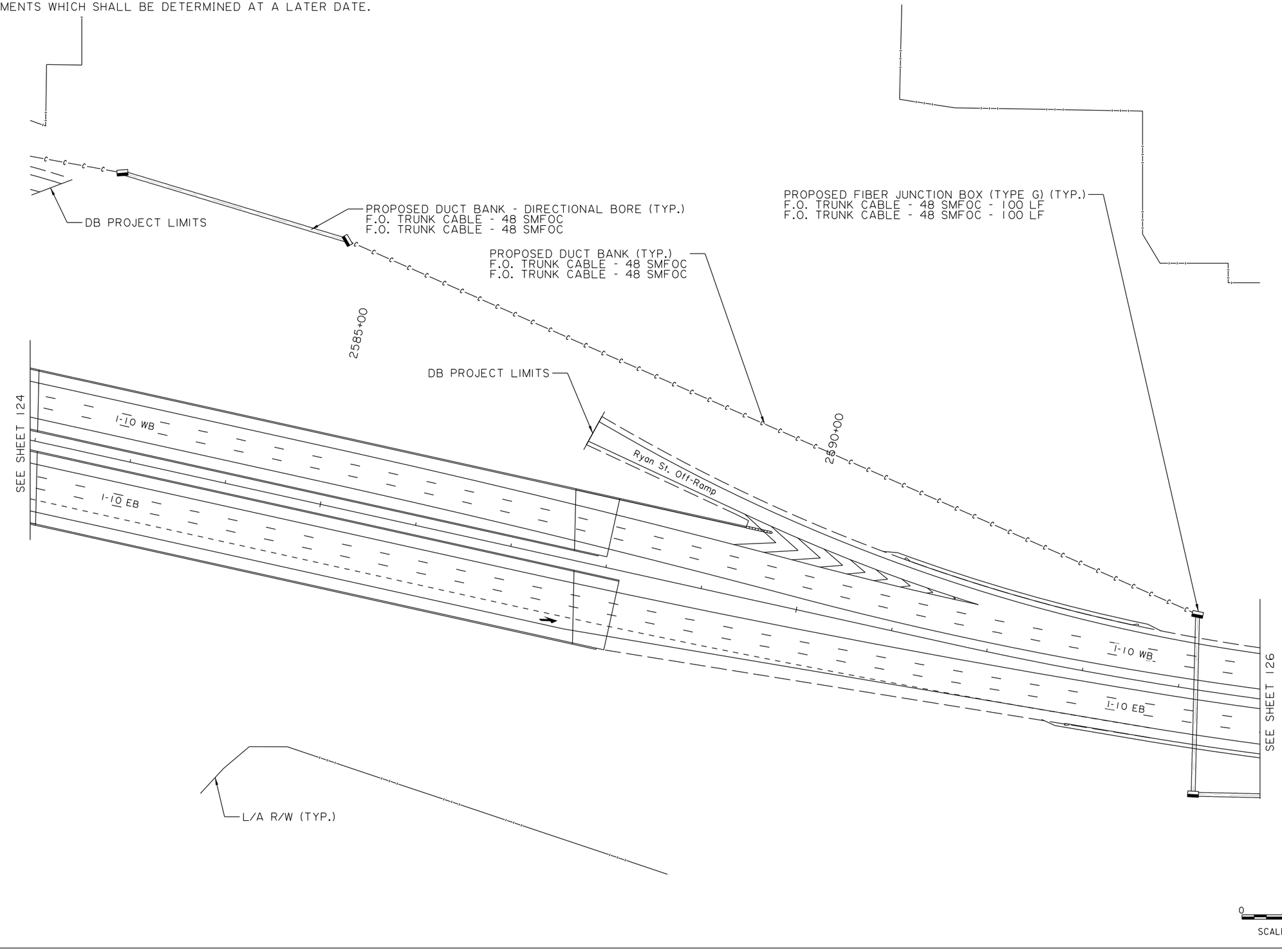

0 50′ 100′
SCALE:1"=100′

N

04/19/23

TECHNICAL PROPOSAL

SHEET NUMBER	125
PARISH	CALCASIEU
CONTROL SECTION	450-91
STATE PROJECT	H.003931

DESIGN	K. HULSMAN	DETAIL	K. HULSMAN
CHECK	C. EVANS	CHECK	C. EVANS
REVIEW		SERIES #	26 OF 28

TECHNICAL PROPOSAL
PRELIMINARY
NOT FOR CONSTRUCTION
ENGINEER: ART DEITCH
LICENSE #: 41842
DATE: 04/19/2023

NO.	DATE	REVISION OR CHANGE ORDER DESCRIPTION	BY

PROPOSED ITS PLANS

I-10 CALCASIEU RIVER BRIDGE P3

DOTD LOUISIANA DEPARTMENT OF TRANSPORTATION & DEVELOPMENT

CBP CALCASIEU BRIDGE PARTNERS

NOTES:
1. PLANS WERE DEVELOPED IN ACCORDANCE WITH THE LATEST LA DOTD STANDARD PLANS AND SPECIAL DETAILS.
2. PROPOSED DUCT BANK SHALL INCLUDE:
   - 2-2" CONDUITS WITH 2-48 COUNT DARK FIBER TRUNKLINES OWNED BY LA DOTD FOR FUTURE USE (DESIGNED AND CONSTRUCTED IN ACCORDANCE WITH LA DOTD STANDARDS AND SPECIFICATIONS).
   - ALL PERMITTED FIBERS (DESIGNED AND CONSTRUCTED IN ACCORDANCE WITH PERMITEE DESIGN REQUIREMENTS).
3. THESE ITS PLANS ONLY SHOW LA DOTD ITS COMPONENTS AND DO NOT ACCOUNT FOR ANY ADDITIONAL CONDUITS, PULL BOXES, FIBERS, ETC. THAT ARE NECESSARY BASED ON PERMITTEE DESIGN REQUIREMENTS WHICH SHALL BE DETERMINED AT A LATER DATE.

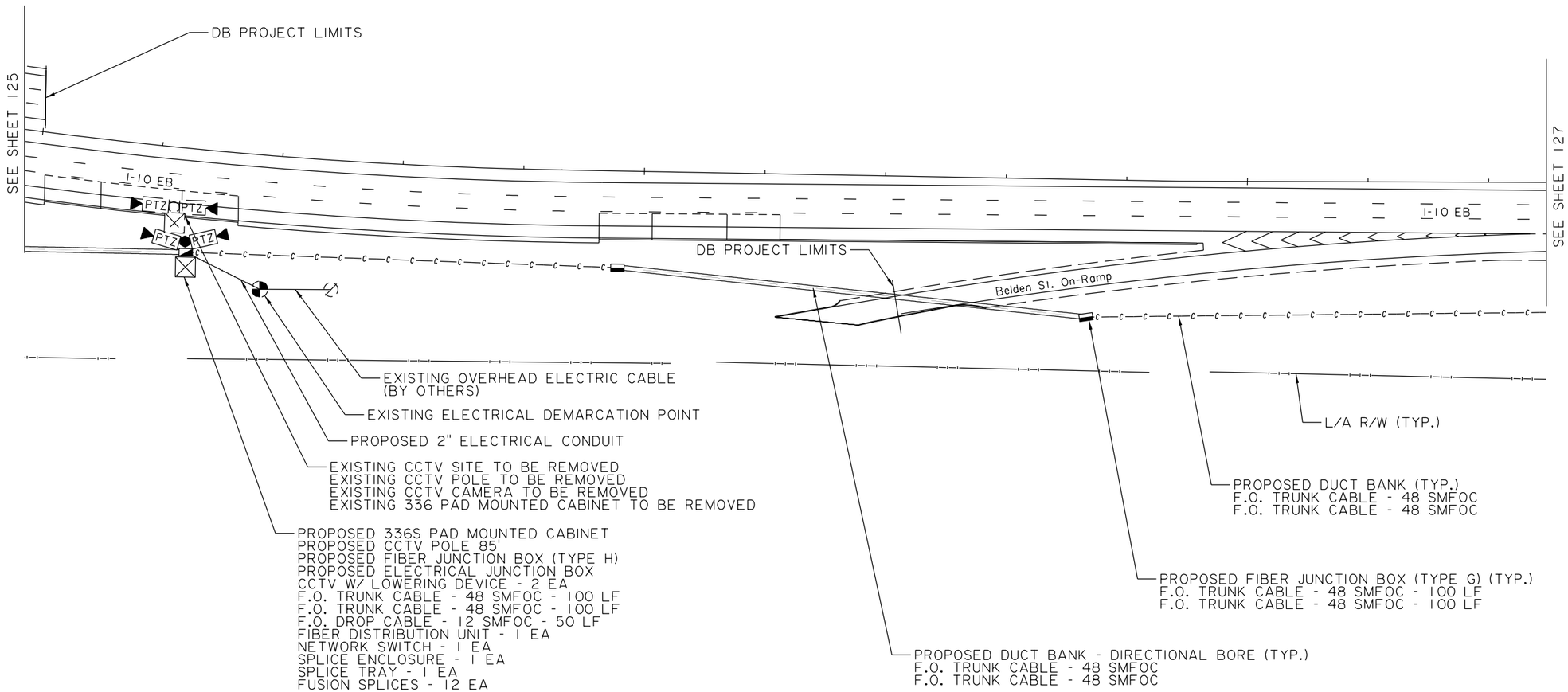

0 50' 100'
SCALE:1"=100'

N

SHEET NUMBER	126
PARISH	CALCASIEU
CONTROL SECTION	450-91
STATE PROJECT	H.003931

DESIGN	K. HULSMAN	DETAIL	K. HULSMAN	SERIES # 27 OF 28
CHECK	C. EVANS	CHECK	C. EVANS	REVIEW

TECHNICAL PROPOSAL
PRELIMINARY
NOT FOR CONSTRUCTION
ENGINEER: ART DEITCH
LICENSE #: 41842
DATE: 04/19/2023

NO.	DATE	REVISION OR CHANGE ORDER DESCRIPTION	BY

PROPOSED ITS PLANS

I-10 CALCASIEU RIVER BRIDGE P3

LOUISIANA DEPARTMENT OF TRANSPORTATION & DEVELOPMENT

CALCASIEU BRIDGE PARTNERS

04/19/23

TECHNICAL PROPOSAL

NOTES:
1. PLANS WERE DEVELOPED IN ACCORDANCE WITH THE LATEST LA DOTD STANDARD PLANS AND SPECIAL DETAILS.
2. PROPOSED DUCT BANK SHALL INCLUDE:
   - 2-2" CONDUITS WITH 2-48 COUNT DARK FIBER TRUNKLINES OWNED BY LA DOTD FOR FUTURE USE (DESIGNED AND CONSTRUCTED IN ACCORDANCE WITH LA DOTD STANDARDS AND SPECIFICATIONS).
   - ALL PERMITTED FIBERS (DESIGNED AND CONSTRUCTED IN ACCORDANCE WITH PERMITEE DESIGN REQUIREMENTS).
3. THESE ITS PLANS ONLY SHOW LA DOTD ITS COMPONENTS AND DO NOT ACCOUNT FOR ANY ADDITIONAL CONDUITS, PULL BOXES, FIBERS, ETC. THAT ARE NECESSARY BASED ON PERMITTEE DESIGN REQUIREMENTS WHICH SHALL BE DETERMINED AT A LATER DATE.

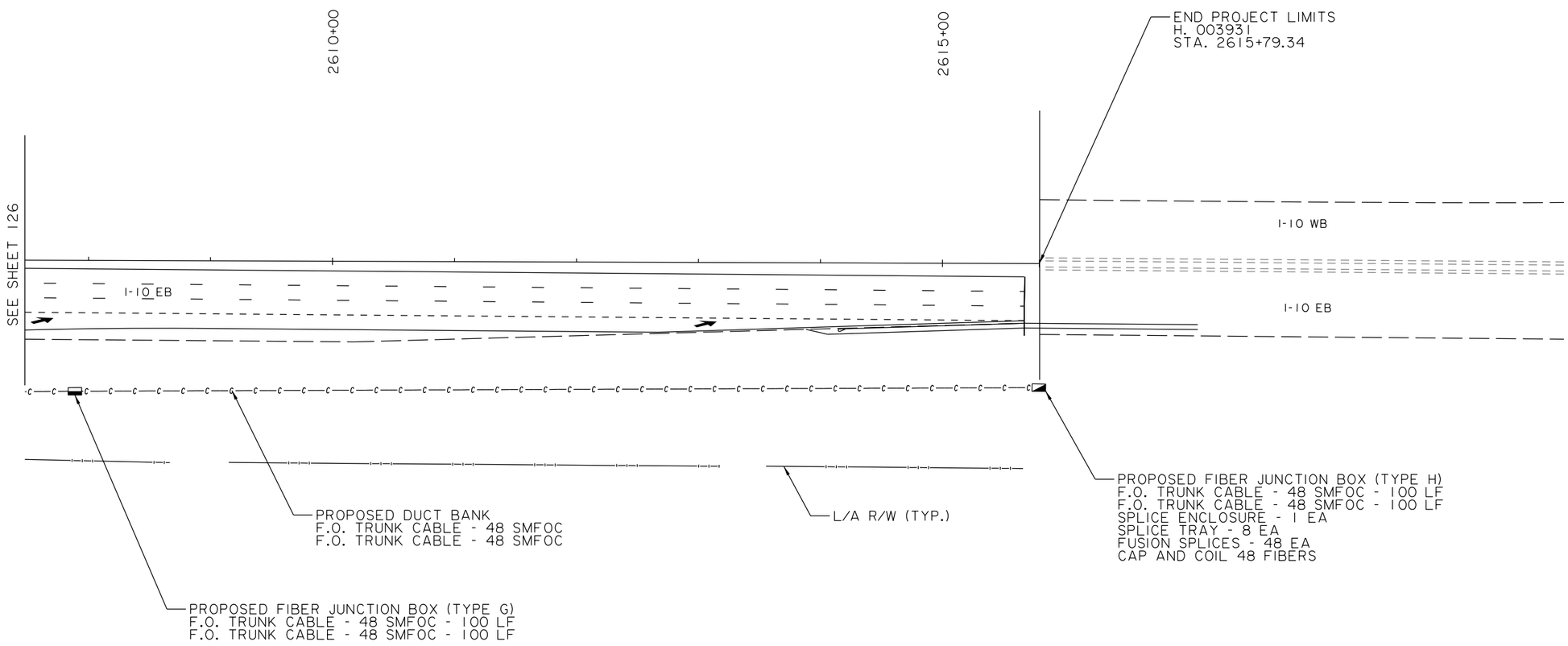

N

0 50' 100'
SCALE:1"=100'

SHEET NUMBER 127

PARISH	CONTROL SECTION	STATE PROJECT
CALCASIEU	450-91	H.003931

DESIGN	CHECK	DETAIL	CHECK	REVIEW	SERIES
K. HULSMAN	C. EVANS	K. HULSMAN	C. EVANS		28 OF 28

TECHNICAL PROPOSAL
PRELIMINARY
NOT FOR CONSTRUCTION
ENGINEER: ART DEITCH
LICENSE #: 41842
DATE: 04/19/2023

NO.	DATE	REVISION OR CHANGE ORDER DESCRIPTION	BY

PROPOSED ITS PLANS

I-10 CALCASIEU RIVER BRIDGE P3

LOUISIANA DEPARTMENT OF TRANSPORTATION & DEVELOPMENT

CALCASIEU BRIDGE PARTNERS

04/19/23

TECHNICAL PROPOSAL

TECHNICAL PROPOSAL

4/19/2023

SHEET NUMBER	128

PARISH	CONTROL SECTION	STATE PROJECT
CALCASIEU	450-91	H.003931

DESIGN	E. CLAY
CHECK	J. GERHART
DETAIL	E. CLAY
CHECK	J. GERHART
REVIEW	C. LEDET
SERIES #	1 OF 1

TECHNICAL PROPOSAL

PRELIMINARY

FOR REVIEW ONLY

ENGINEER:
JONATHAN E. GERHART

LICENSE #:
43052

DATE:
4/19/2023

NO.	DATE	REVISION OR CHANGE ORDER DESCRIPTION	BY

STATE OF LOUISIANA

GENERAL SITE PLAN

I-10 CALCASIEU RIVER BRIDGE P3

DOTD
LOUISIANA DEPARTMENT OF TRANSPORTATION & DEVELOPMENT

CBP
CALCASIEU BRIDGE PARTNERS

E01_General Site Plan - 1.dgn

4/19/2023

TECHNICAL PROPOSAL

LEGEND:

- LIGHT POLE, HIGHMAST, 327
- LUMINAIRE, HIGHMAST, 315
- UJB — UNDERGROUND JUNCTION BOX (UJB)
- DUCT (UNDERGROUND)
- LIGHT POLE, LOWMAST, 323
- LUMINAIRE, LOWMAST, 313
- BJB — BARRIER JUNCTION BOX (BJB)
- CASING, JACKED OR BORED
- LIGHT POLE, LOWMAST, 322
- LUMINAIRE, LOWMAST, 326
- DM — DUCT MARKER (CONCRETE)
- LUMINAIRE, LOWMAST, 311

N

Scale: 1" = 100'

POLE STATION LABEL:

POLE OFFSET FROM BASELINE (FEET)

STATION — STA. XXX+XX.XX (RAMP OR HIGHWAY), XX (RT./LT.)
[X,X,XX]-[XXX],[XXX]

POLE ID NO. { SECONDARY POWER CONTROLLER / CIRCUIT # / POLE ID #

LUMINAIRE (ITEM #)

POLE (ITEM #)

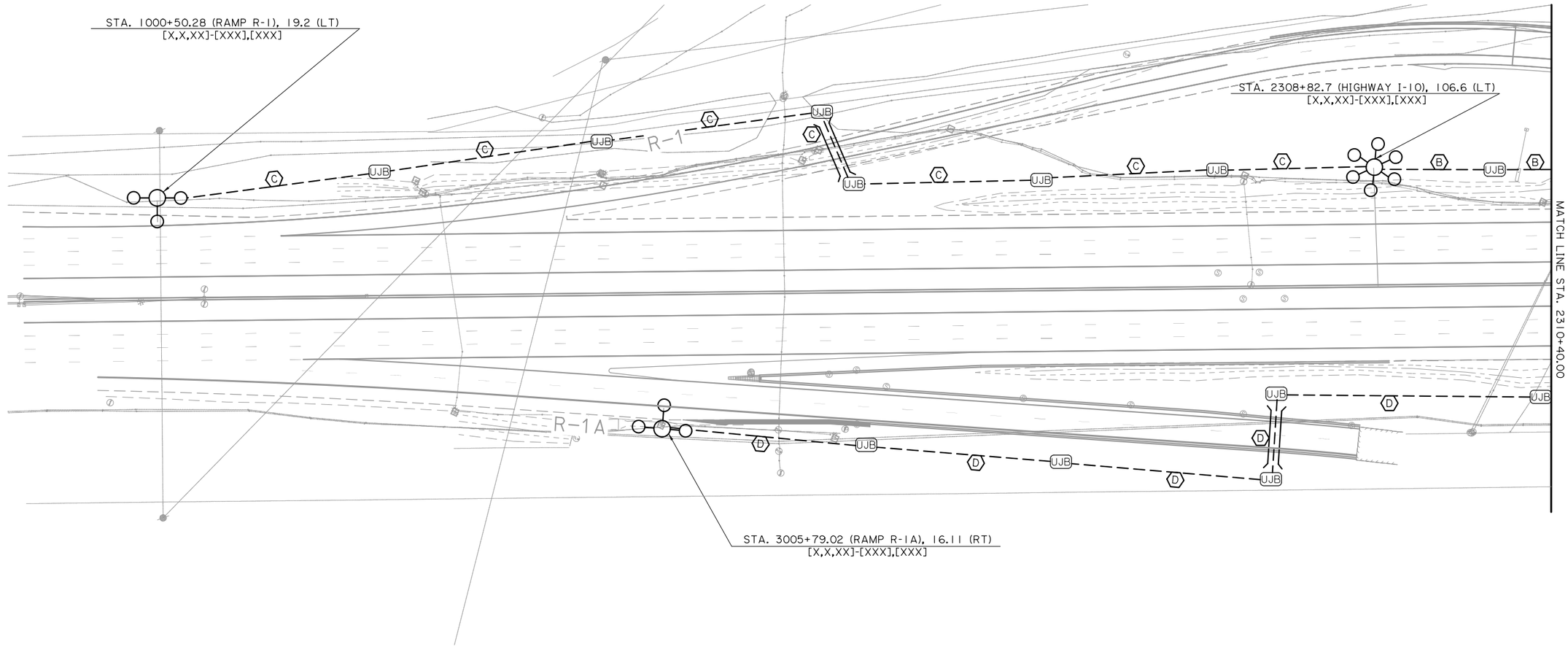

SECTION "A"

SPECIFIC NOTES:

1. THIS SHEET IS INTENDED ONLY AS A GENERAL OVERVIEW OF THE WORK REQUIRED. OMISSION FROM THIS SHEET OF ANY ITEM SHOWN ELSEWHERE IN THE PLANS DOES NOT RELIEVE THE CONTRACTOR FROM RESPONSIBILITY FOR ANY ASSOCIATED WORK.
2. LABELED CONDUIT RUNS SHOWN CROSSING ROADWAYS, DRIVEWAYS, ETC. SHALL BE INSTALLED IN PROTECTIVE HDPE CASING. SEE LAYOUT FOR LOCATIONS.
3. CONTRACTOR SHALL INSTALL ALL NEW ELECTRICAL WIRING, SPLICES, GROUNDING, AND APPURTENANCES, AS SPECIFIED BY THE ELECTRICAL DETAILS IN THESE PLANS AND MANUFACTURER'S SPECIFICATIONS.
4. REFER TO PLAN SHEET 128 FOR LIGHTING PLAN SECTIONS.
5. CONTRACTOR SHALL INSTALL (1) UNDERGROUND JUNCTION BOX "JB-2" IN ALL LOW MAST CONRETE MOWING APRONS.
6. REFER TO PLAN SHEETS 175-176 FOR CONSTRUCTION DETAILS OF LIGHT POLE FOUNDATION AND JUNCTION BOX INSTALLATION AT EACH MEDIAN BARRIER LOCATION.

✡ NUMBER(S) THAT ARE SHOWN IN PARENTHESES (###) CORRESPOND TO ELECTRICAL EQUIPMENT ITEMS LISTED ON PLAN SHEETS 177 - 181.

LABEL	CONDUIT WITH CONDUCTORS	PAY ITEM
(B)	CONDUIT WITH CONDUCTORS (PVC/HDPE) (1-1/2") (2 #4, 1 #4 STRANDED GROUND)	822-02-XXXXX
(C)	CONDUIT WITH CONDUCTORS (PVC/HDPE) (1-1/2") (2 #6, 1 #6 STRANDED GROUND)	822-02-XXXXX
(D)	CONDUIT WITH CONDUCTORS (PVC/HDPE) (1-1/2") (2 #8, 1 #8 STRANDED GROUND)	822-02-XXXXX

SHEET NUMBER 129

PARISH	CONTROL SECTION	STATE PROJECT
CALCASIEU	450-91	H.003931

DESIGN	CHECK	DETAIL	CHECK	REVIEW	SERIES
E. CLAY	J. GERHART	E. CLAY	J. GERHART	C. LEDET	1 OF 26

TECHNICAL PROPOSAL

PRELIMINARY

FOR REVIEW ONLY

ENGINEER: JONATHAN E. GERHART

LICENSE #: 43052

DATE: 4/19/2023

NO.	DATE	REVISION OR CHANGE ORDER DESCRIPTION	BY

LIGHTING PLAN - 1

STA. 2296+57 TO STA. 2310+40.00

I-10 CALCASIEU RIVER BRIDGE P3

DOTD LOUISIANA DEPARTMENT OF TRANSPORTATION & DEVELOPMENT

CBP CALCASIEU BRIDGE PARTNERS

E02_Lighting Plan - 1.dgn

TECHNICAL PROPOSAL

4/19/2023

LEGEND:

- LIGHT POLE, HIGHMAST, 327
- LUMINAIRE, HIGHMAST, 315
- UJB — UNDERGROUND JUNCTION BOX (UJB)
- DUCT (UNDERGROUND)
- LIGHT POLE, LOWMAST, 323
- LUMINAIRE, LOWMAST, 313
- BJB — BARRIER JUNCTION BOX (BJB)
- CASING, JACKED OR BORED
- LIGHT POLE, LOWMAST, 322
- LUMINAIRE, LOWMAST, 326
- DM — DUCT MARKER (CONCRETE)
- LUMINAIRE, LOWMAST, 311

N

Scale : 1" = 100'

POLE STATION LABEL:

POLE OFFSET FROM BASELINE (FEET)

STATION — STA. XXX+XX.XX (RAMP OR HIGHWAY), XX (RT./LT.)
[X,X,XX]-[XXX],[XXX]

POLE ID NO.: SECONDARY POWER CONTROLLER, CIRCUIT #, POLE ID #

LUMINAIRE (ITEM #)

POLE (ITEM #)

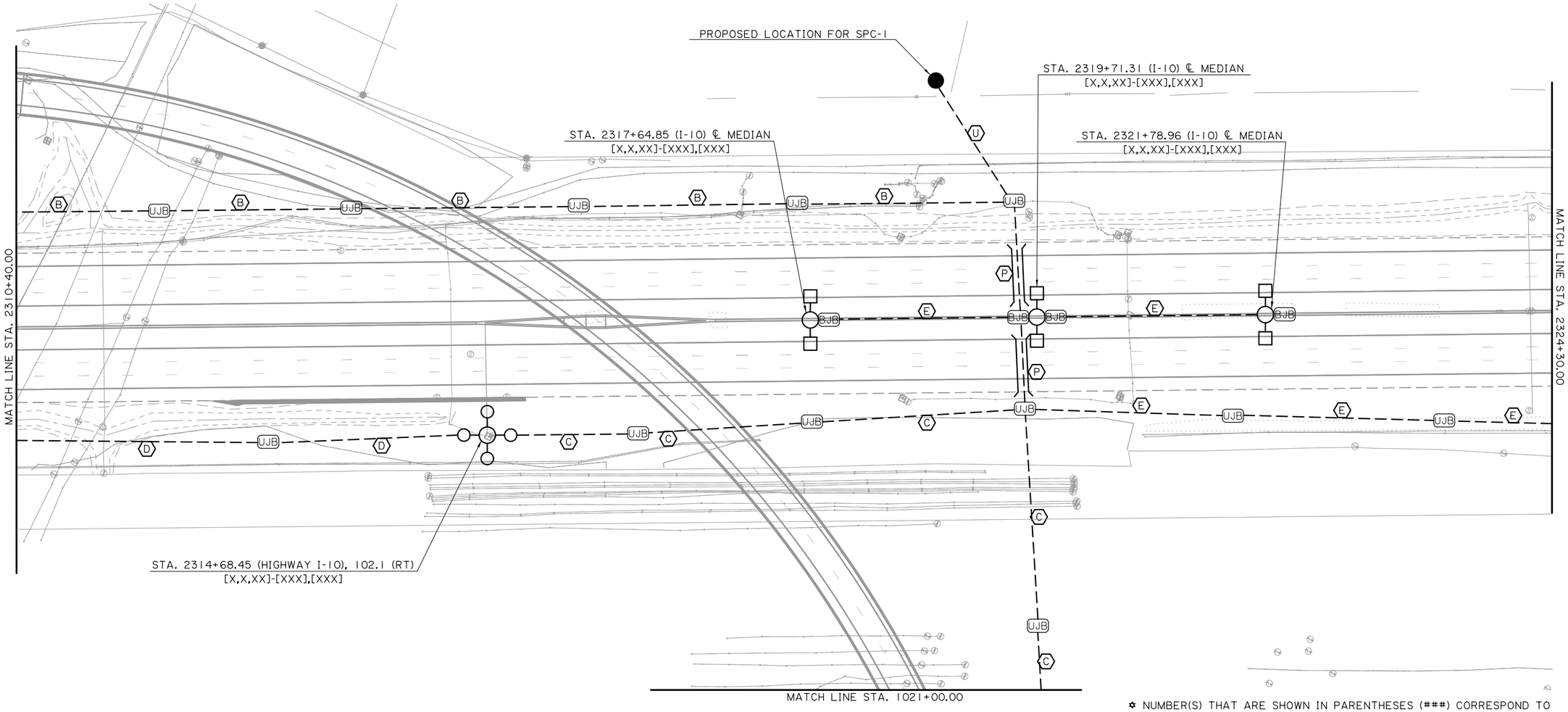

✡ NUMBER(S) THAT ARE SHOWN IN PARENTHESES (###) CORRESPOND TO ELECTRICAL EQUIPMENT ITEMS LISTED ON PLAN SHEETS 177 - 181.

SECTION "B"

SPECIFIC NOTES:

1. THIS SHEET IS INTENDED ONLY AS A GENERAL OVERVIEW OF THE WORK REQUIRED. OMISSION FROM THIS SHEET OF ANY ITEM SHOWN ELSEWHERE IN THE PLANS DOES NOT RELIEVE THE CONTRACTOR FROM RESPONSIBILITY FOR ANY ASSOCIATED WORK.
2. LABELED CONDUIT RUNS SHOWN CROSSING ROADWAYS, DRIVEWAYS, ETC. SHALL BE INSTALLED IN PROTECTIVE HDPE CASING. SEE LAYOUT FOR LOCATIONS.
3. CONTRACTOR SHALL INSTALL ALL NEW ELECTRICAL WIRING, SPLICES, GROUNDING, AND APPURTENANCES, AS SPECIFIED BY THE ELECTRICAL DETAILS IN THESE PLANS AND MANUFACTURER'S SPECIFICATIONS.
4. REFER TO PLAN SHEET 128 FOR LIGHTING PLAN SECTIONS.
5. CONTRACTOR SHALL INSTALL (1) UNDERGROUND JUNCTION BOX "JB-2" IN ALL LOW MAST CONRETE MOWING APRONS.
6. REFER TO PLAN SHEETS 175-176 FOR CONSTRUCTION DETAILS OF LIGHT POLE FOUNDATION AND JUNCTION BOX INSTALLATION AT EACH MEDIAN BARRIER LOCATION.

LABEL	CONDUIT WITH CONDUCTORS	PAY ITEM
B	CONDUIT WITH CONDUCTORS (PVC/HDPE) (1-1/2") (2 #4, 1 #4 STRANDED GROUND)	822-02-XXXXX
C	CONDUIT WITH CONDUCTORS (PVC/HDPE) (1-1/2") (2 #6, 1 #6 STRANDED GROUND)	822-02-XXXXX
D	CONDUIT WITH CONDUCTORS (PVC/HDPE) (1-1/2") (2 #8, 1 #8 STRANDED GROUND)	822-02-XXXXX
E	CONDUIT WITH CONDUCTORS (PVC/HDPE) (1-1/2") (2 #10, 1 #10 STRANDED GROUND)	822-02-XXXXX
P	CONDUIT WITH CONDUCTORS (PVC/HDPE) (1-1/2") (2 #6, 2 #6, 2 #10, 1 #6 STRANDED GROUND)	822-02-XXXXX
U	CONDUIT WITH CONDUCTORS (PVC/HDPE) (2-1/2") (2 #4, 2 #6, 2 #6, 2 #6, 2 #10, 1 #4 STRANDED GRD)	822-02-XXXXX

SHEET NUMBER 130

PARISH	CONTROL SECTION	STATE PROJECT
CALCASIEU	450-91	H.003931

DESIGN	CHECK	DETAIL	CHECK	REVIEW	SERIES
E. CLAY	J. GERHART	E. CLAY	J. GERHART	C. LEDET	2 OF 26

TECHNICAL PROPOSAL
PRELIMINARY
FOR REVIEW ONLY
ENGINEER:
JONATHAN E. GERHART
LICENSE #:
43052
DATE:
4/19/2023

NO.	DATE	REVISION OR CHANGE ORDER DESCRIPTION	BY

LIGHTING PLAN - 2
STA. 2310+40.00 TO STA. 2324+30.00

I-10 CALCASIEU RIVER BRIDGE P3

LOUISIANA DEPARTMENT OF TRANSPORTATION & DEVELOPMENT

CALCASIEU BRIDGE PARTNERS

B03_Lighting Plan - 2.dgn

TECHNICAL PROPOSAL

4/19/2023

LEGEND:

- LIGHT POLE, HIGHMAST, 327
- LUMINAIRE, HIGHMAST, 315
- UJB — UNDERGROUND JUNCTION BOX (UJB)
- DUCT (UNDERGROUND)
- LIGHT POLE, LOWMAST, 323
- LUMINAIRE, LOWMAST, 313
- BJB — BARRIER JUNCTION BOX (BJB)
- CASING, JACKED OR BORED
- LIGHT POLE, LOWMAST, 322
- LUMINAIRE, LOWMAST, 326
- DM — DUCT MARKER (CONCRETE)
- LUMINAIRE, LOWMAST, 311

N

Scale : 1" = 100'

POLE STATION LABEL:

POLE OFFSET FROM BASELINE (FEET)

STATION — STA. XXX+XX.XX (RAMP OR HIGHWAY), XX (RT./LT.)
[X,X,XX]-[XXX],[XXX]

POLE ID NO. { SECONDARY POWER CONTROLLER, CIRCUIT #, POLE ID #

LUMINAIRE (ITEM #)

POLE (ITEM #)

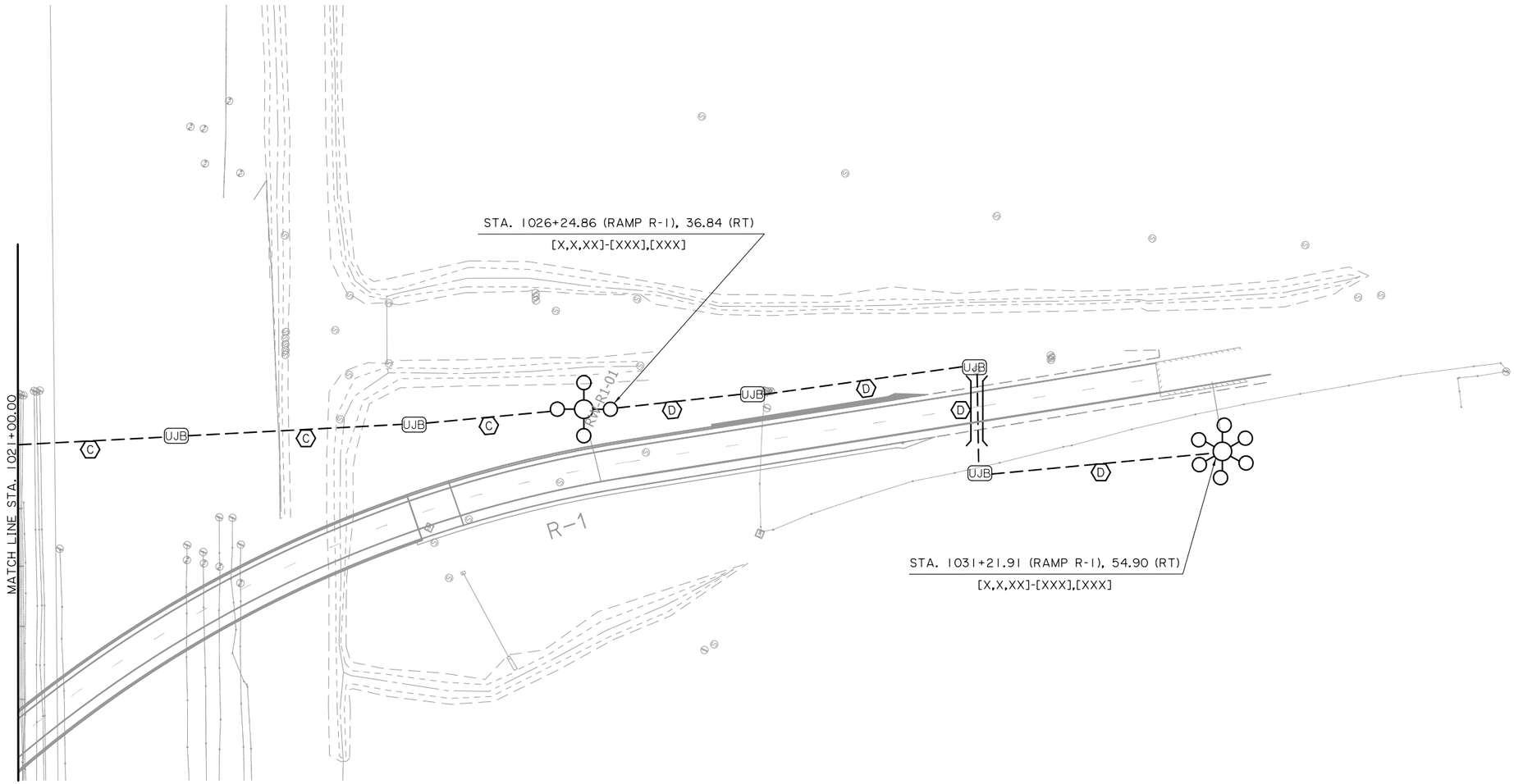

SECTION "C"

✡ NUMBER(S) THAT ARE SHOWN IN PARENTHESES (###) CORRESPOND TO ELECTRICAL EQUIPMENT ITEMS LISTED ON PLAN SHEETS 177 - 181.

SPECIFIC NOTES:

1. THIS SHEET IS INTENDED ONLY AS A GENERAL OVERVIEW OF THE WORK REQUIRED. OMISSION FROM THIS SHEET OF ANY ITEM SHOWN ELSEWHERE IN THE PLANS DOES NOT RELIEVE THE CONTRACTOR FROM RESPONSIBILITY FOR ANY ASSOCIATED WORK.
2. LABELED CONDUIT RUNS SHOWN CROSSING ROADWAYS, DRIVEWAYS, ETC. SHALL BE INSTALLED IN PROTECTIVE HDPE CASING. SEE LAYOUT FOR LOCATIONS.
3. CONTRACTOR SHALL INSTALL ALL NEW ELECTRICAL WIRING, SPLICES, GROUNDING, AND APPURTENANCES, AS SPECIFIED BY THE ELECTRICAL DETAILS IN THESE PLANS AND MANUFACTURER'S SPECIFICATIONS.
4. REFER TO PLAN SHEET 128 FOR LIGHTING PLAN SECTIONS.
5. CONTRACTOR SHALL INSTALL (1) UNDERGROUND JUNCTION BOX "JB-2" IN ALL LOW MAST CONRETE MOWING APRONS.
6. REFER TO PLAN SHEETS 175-176 FOR CONSTRUCTION DETAILS OF LIGHT POLE FOUNDATION AND JUNCTION BOX INSTALLATION AT EACH MEDIAN BARRIER LOCATION.

LABEL	CONDUIT WITH CONDUCTORS	PAY ITEM
C	CONDUIT WITH CONDUCTORS (PVC/HDPE) (1-1/2") (2 #6, 1 #6 STRANDED GROUND)	822-02-XXXXX
D	CONDUIT WITH CONDUCTORS (PVC/HDPE) (1-1/2") (2 #8, 1 #8 STRANDED GROUND)	822-02-XXXXX

SHEET NUMBER	131
PARISH	CALCASIEU
CONTROL SECTION	450-91
STATE PROJECT	H.003931
DESIGN	E. CLAY
CHECK	J. GERHART
DETAIL	E. CLAY
CHECK	J. GERHART
REVIEW	C. LEDET
SERIES #	3 OF 26

TECHNICAL PROPOSAL

PRELIMINARY

FOR REVIEW ONLY

ENGINEER:
JONATHAN E. GERHART

LICENSE #:
43052

DATE:
4/19/2023

NO.	DATE	REVISION OR CHANGE ORDER DESCRIPTION	BY

LIGHTING PLAN - 3

STA. 1021+00.00 TO STA. 1031+70.26

I-10 CALCASIEU RIVER BRIDGE P3

LOUISIANA DEPARTMENT OF TRANSPORTATION & DEVELOPMENT

CALCASIEU BRIDGE PARTNERS

E04_Lighting Plan - 3.dgn

TECHNICAL PROPOSAL

4/19/2023

LEGEND:

- LIGHT POLE, HIGHMAST, 327
- LUMINAIRE, HIGHMAST, 315
- UJB — UNDERGROUND JUNCTION BOX (UJB)
- DUCT (UNDERGROUND)
- LIGHT POLE, LOWMAST, 323
- LUMINAIRE, LOWMAST, 313
- BJB — BARRIER JUNCTION BOX (BJB)
- CASING, JACKED OR BORED
- LIGHT POLE, LOWMAST, 322
- LUMINAIRE, LOWMAST, 326
- DM — DUCT MARKER (CONCRETE)
- LUMINAIRE, LOWMAST, 311

Scale: 1" = 100'

POLE STATION LABEL:

POLE OFFSET FROM BASELINE (FEET)
STATION — STA. XXX+XX.XX (RAMP OR HIGHWAY), XX (RT./LT.)
[X,X,XX]-[XXX],[XXX]
POLE ID NO. { SECONDARY POWER CONTROLLER, CIRCUIT #, POLE ID # }
LUMINAIRE (ITEM #)
POLE (ITEM #)

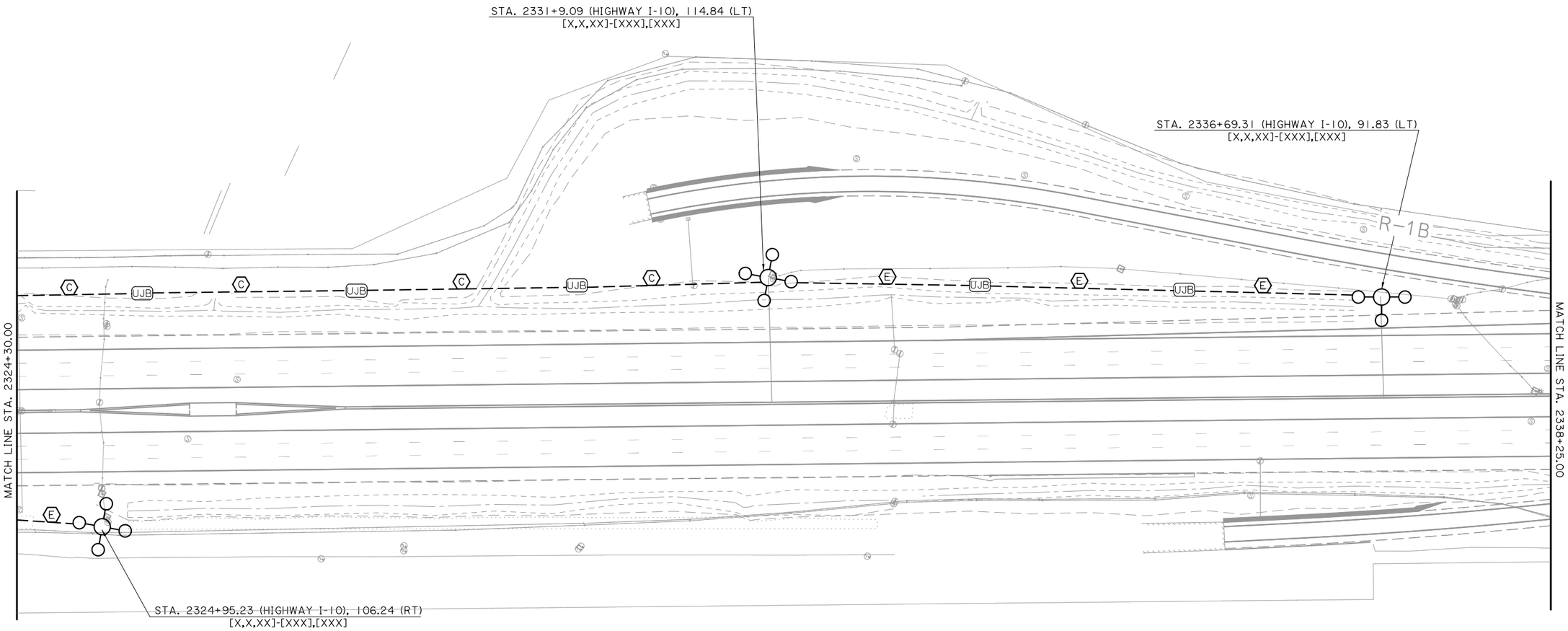

SECTION "D"

SPECIFIC NOTES:

1. THIS SHEET IS INTENDED ONLY AS A GENERAL OVERVIEW OF THE WORK REQUIRED. OMISSION FROM THIS SHEET OF ANY ITEM SHOWN ELSEWHERE IN THE PLANS DOES NOT RELIEVE THE CONTRACTOR FROM RESPONSIBILITY FOR ANY ASSOCIATED WORK.
2. LABELED CONDUIT RUNS SHOWN CROSSING ROADWAYS, DRIVEWAYS, ETC. SHALL BE INSTALLED IN PROTECTIVE HDPE CASING. SEE LAYOUT FOR LOCATIONS.
3. CONTRACTOR SHALL INSTALL ALL NEW ELECTRICAL WIRING, SPLICES, GROUNDING, AND APPURTENANCES, AS SPECIFIED BY THE ELECTRICAL DETAILS IN THESE PLANS AND MANUFACTURER'S SPECIFICATIONS.
4. REFER TO PLAN SHEET 128 FOR LIGHTING PLAN SECTIONS.
5. CONTRACTOR SHALL INSTALL (1) UNDERGROUND JUNCTION BOX "JB-2" IN ALL LOW MAST CONRETE MOWING APRONS.
6. REFER TO PLAN SHEETS 175-176 FOR CONSTRUCTION DETAILS OF LIGHT POLE FOUNDATION AND JUNCTION BOX INSTALLATION AT EACH MEDIAN BARRIER LOCATION.

✪ NUMBER(S) THAT ARE SHOWN IN PARENTHESES (###) CORRESPOND TO ELECTRICAL EQUIPMENT ITEMS LISTED ON PLAN SHEETS 177 - 181.

LABEL	CONDUIT WITH CONDUCTORS	PAY ITEM
C	CONDUIT WITH CONDUCTORS (PVC/HDPE) (1-1/2") (2 #6, 1 #6 STRANDED GROUND)	822-02-XXXXX
E	CONDUIT WITH CONDUCTORS (PVC/HDPE) (1-1/2") (2 #10, 1 #10 STRANDED GROUND)	822-02-XXXXX

SHEET NUMBER 132

PARISH	CONTROL SECTION	STATE PROJECT
CALCASIEU	450-91	H.003931

DESIGN	CHECK	DETAIL	CHECK	REVIEW	SERIES
E. CLAY	J. GERHART	E. CLAY	J. GERHART	C. LEDET	4 OF 26

TECHNICAL PROPOSAL
PRELIMINARY
FOR REVIEW ONLY
ENGINEER: JONATHAN E. GERHART
LICENSE #: 43052
DATE: 4/19/2023

NO.	DATE	REVISION OR CHANGE ORDER DESCRIPTION	BY

LIGHTING PLAN - 4
STA. 2324+30.00 TO 2338+25.00

I-10 CALCASIEU RIVER BRIDGE P3

DOTD LOUISIANA DEPARTMENT OF TRANSPORTATION & DEVELOPMENT

CBP CALCASIEU BRIDGE PARTNERS

E05_Lighting Plan - 4.dgn

4/19/2023

TECHNICAL PROPOSAL

LEGEND:

- LIGHT POLE, HIGHMAST, 327
- LUMINAIRE, HIGHMAST, 315
- UJB — UNDERGROUND JUNCTION BOX (UJB)
- DUCT (UNDERGROUND)
- LIGHT POLE, LOWMAST, 323
- LUMINAIRE, LOWMAST, 313
- BJB — BARRIER JUNCTION BOX (BJB)
- CASING, JACKED OR BORED
- LIGHT POLE, LOWMAST, 322
- LUMINAIRE, LOWMAST, 326
- DM — DUCT MARKER (CONCRETE)
- LUMINAIRE, LOWMAST, 311

N

Scale : 1" = 100'

POLE STATION LABEL:

POLE OFFSET FROM BASELINE (FEET)
STATION — STA. XXX+XX.XX (RAMP OR HIGHWAY), XX (RT./LT.)
[X,X,XX]-[XXX],[XXX]
POLE ID NO. { SECONDARY POWER CONTROLLER, CIRCUIT #, POLE ID #
LUMINAIRE (ITEM #)
POLE (ITEM #)

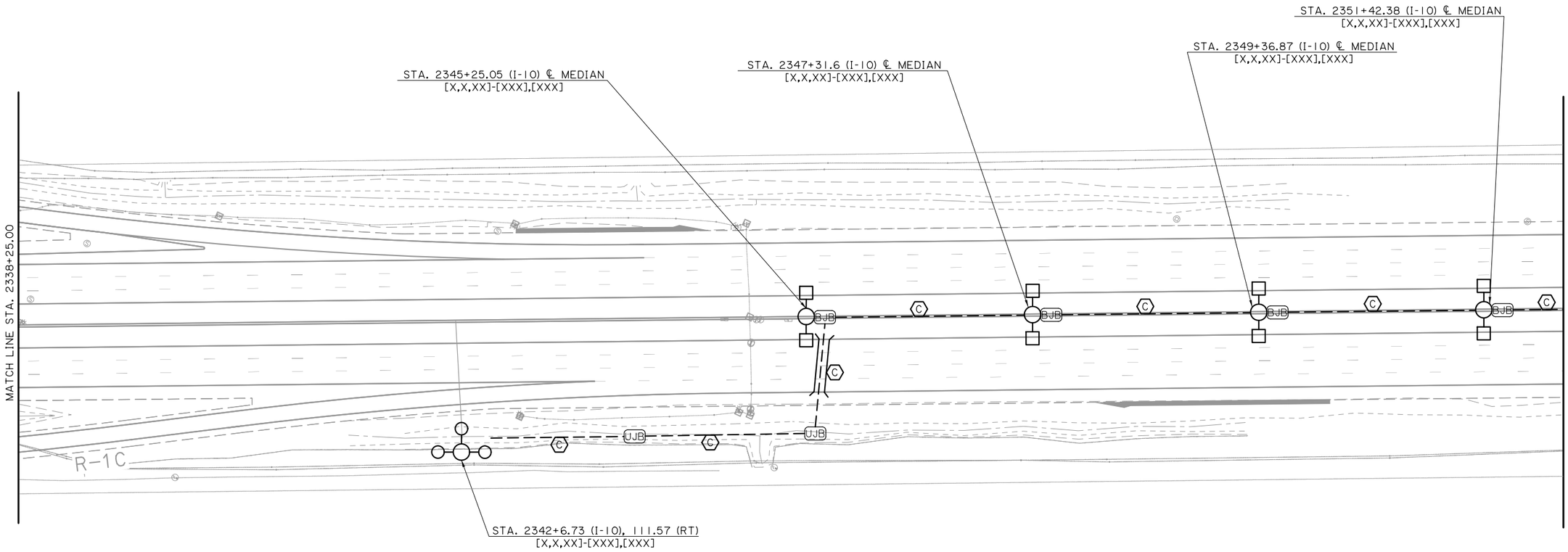

SECTION "E"

SPECIFIC NOTES:

1. THIS SHEET IS INTENDED ONLY AS A GENERAL OVERVIEW OF THE WORK REQUIRED. OMISSION FROM THIS SHEET OF ANY ITEM SHOWN ELSEWHERE IN THE PLANS DOES NOT RELIEVE THE CONTRACTOR FROM RESPONSIBILITY FOR ANY ASSOCIATED WORK.
2. LABELED CONDUIT RUNS SHOWN CROSSING ROADWAYS, DRIVEWAYS, ETC. SHALL BE INSTALLED IN PROTECTIVE HDPE CASING. SEE LAYOUT FOR LOCATIONS.
3. CONTRACTOR SHALL INSTALL ALL NEW ELECTRICAL WIRING, SPLICES, GROUNDING, AND APPURTENANCES, AS SPECIFIED BY THE ELECTRICAL DETAILS IN THESE PLANS AND MANUFACTURER'S SPECIFICATIONS.
4. REFER TO PLAN SHEET 128 FOR LIGHTING PLAN SECTIONS.
5. CONTRACTOR SHALL INSTALL (1) UNDERGROUND JUNCTION BOX "JB-2" IN ALL LOW MAST CONRETE MOWING APRONS.
6. REFER TO PLAN SHEETS 175-176 FOR CONSTRUCTION DETAILS OF LIGHT POLE FOUNDATION AND JUNCTION BOX INSTALLATION AT EACH MEDIAN BARRIER LOCATION.

✪ NUMBER(S) THAT ARE SHOWN IN PARENTHESES (###) CORRESPOND TO ELECTRICAL EQUIPMENT ITEMS LISTED ON PLAN SHEETS 177 - 181.

LABEL	CONDUIT WITH CONDUCTORS	PAY ITEM
C	CONDUIT WITH CONDUCTORS (PVC/HDPE) (1-1/2") (2 #6, 1 #6 STRANDED GROUND)	822-02-XXXXX

SHEET NUMBER 133

CALCASIEU	450-91	H.003931
PARISH	CONTROL SECTION	STATE PROJECT

DESIGN	CHECK	DETAIL	CHECK	REVIEW	SERIES
E. CLAY	J. GERHART	E. CLAY	J. GERHART	C. LEDET	5 OF 26

TECHNICAL PROPOSAL
PRELIMINARY
FOR REVIEW ONLY
ENGINEER: JONATHAN E. GERHART
LICENSE #: 43052
DATE: 4/19/2023

NO.	DATE	REVISION OR CHANGE ORDER DESCRIPTION	BY

LIGHTING PLAN - 5
STA. 2338+25.00 TO 2352+08.00

I-10 CALCASIEU RIVER BRIDGE P3

DOTD LOUISIANA DEPARTMENT OF TRANSPORTATION & DEVELOPMENT

CBP CALCASIEU BRIDGE PARTNERS

E06_Lighting Plan - 5.dgn

4/19/2023

TECHNICAL PROPOSAL

LEGEND:

- LIGHT POLE, HIGHMAST, 327
- LUMINAIRE, HIGHMAST, 315
- UJB — UNDERGROUND JUNCTION BOX (UJB)
- DUCT (UNDERGROUND)
- LIGHT POLE, LOWMAST, 323
- LUMINAIRE, LOWMAST, 313
- BJB — BARRIER JUNCTION BOX (BJB)
- CASING, JACKED OR BORED
- LIGHT POLE, LOWMAST, 322
- LUMINAIRE, LOWMAST, 326
- DM — DUCT MARKER (CONCRETE)
- LUMINAIRE, LOWMAST, 311

N

Scale : 1" = 100'

POLE STATION LABEL:

POLE OFFSET FROM BASELINE (FEET)
STATION — STA. XXX+XX.XX (RAMP OR HIGHWAY), XX (RT./LT.)
[X,X,XX]-[XXX],[XXX]
POLE ID NO. { SECONDARY POWER CONTROLLER / CIRCUIT # / POLE ID #
LUMINAIRE (ITEM #)
POLE (ITEM #)

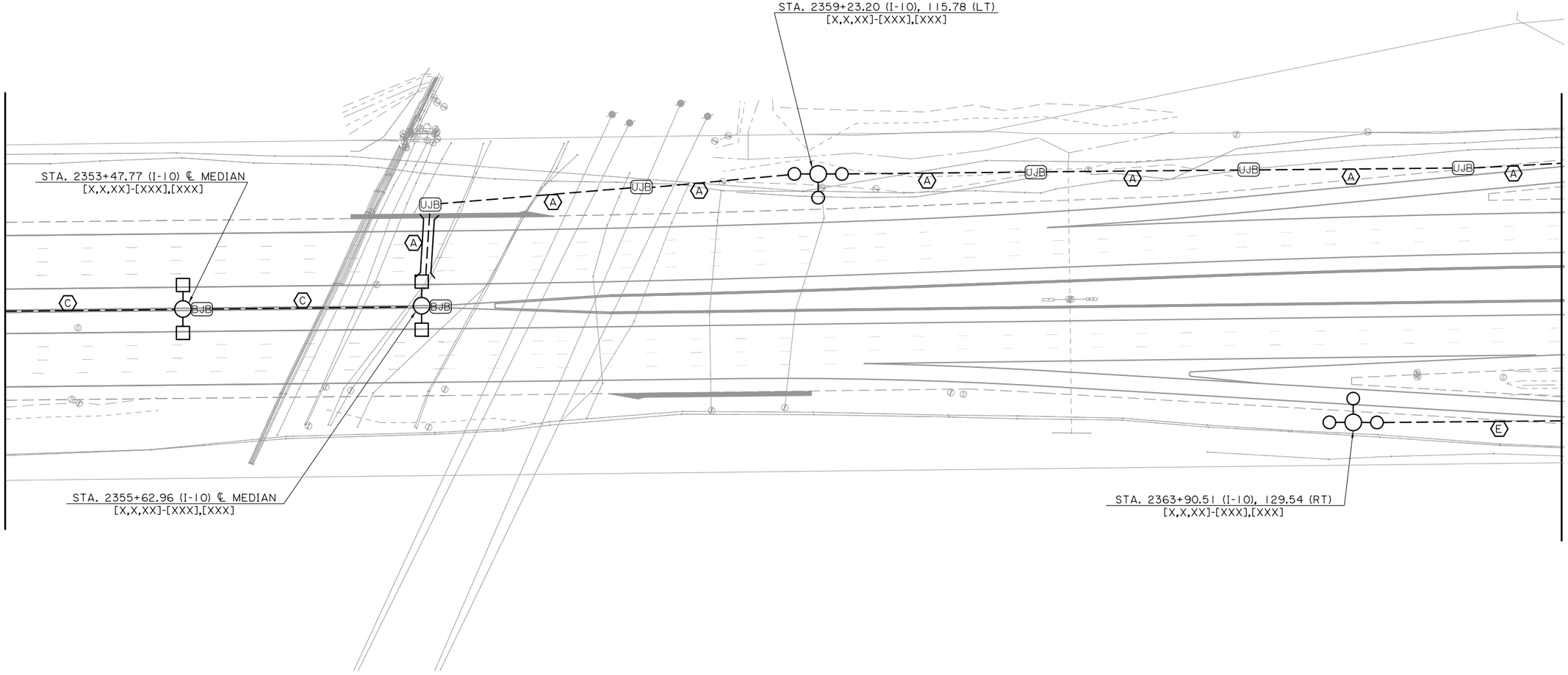

SECTION "F"

✡ NUMBER(S) THAT ARE SHOWN IN PARENTHESES (###) CORRESPOND TO ELECTRICAL EQUIPMENT ITEMS LISTED ON PLAN SHEETS 177 - 181.

SPECIFIC NOTES:

1. THIS SHEET IS INTENDED ONLY AS A GENERAL OVERVIEW OF THE WORK REQUIRED. OMISSION FROM THIS SHEET OF ANY ITEM SHOWN ELSEWHERE IN THE PLANS DOES NOT RELIEVE THE CONTRACTOR FROM RESPONSIBILITY FOR ANY ASSOCIATED WORK.
2. LABELED CONDUIT RUNS SHOWN CROSSING ROADWAYS, DRIVEWAYS, ETC. SHALL BE INSTALLED IN PROTECTIVE HDPE CASING. SEE LAYOUT FOR LOCATIONS.
3. CONTRACTOR SHALL INSTALL ALL NEW ELECTRICAL WIRING, SPLICES, GROUNDING, AND APPURTENANCES, AS SPECIFIED BY THE ELECTRICAL DETAILS IN THESE PLANS AND MANUFACTURER'S SPECIFICATIONS.
4. REFER TO PLAN SHEET 128 FOR LIGHTING PLAN SECTIONS.
5. CONTRACTOR SHALL INSTALL (1) UNDERGROUND JUNCTION BOX "JB-2" IN ALL LOW MAST CONRETE MOWING APRONS.
6. REFER TO PLAN SHEETS 175-176 FOR CONSTRUCTION DETAILS OF LIGHT POLE FOUNDATION AND JUNCTION BOX INSTALLATION AT EACH MEDIAN BARRIER LOCATION.

LABEL	CONDUIT WITH CONDUCTORS	PAY ITEM
A	CONDUIT WITH CONDUCTORS (PVC/HDPE) (1-1/2") (2 #2, 1 #2 STRANDED GROUND)	822-02-XXXXX
C	CONDUIT WITH CONDUCTORS (PVC/HDPE) (1-1/2") (2 #6, 1 #6 STRANDED GROUND)	822-02-XXXXX
E	CONDUIT WITH CONDUCTORS (PVC/HDPE) (1-1/2") (2 #10, 1 #10 STRANDED GROUND)	822-02-XXXXX

SHEET NUMBER 134

PARISH	CONTROL SECTION	STATE PROJECT
CALCASIEU	450-91	H.003931

DESIGN	CHECK	DETAIL	CHECK	REVIEW	SERIES
E. CLAY	J. GERHART	E. CLAY	J. GERHART	C. LEDET	6 OF 26

TECHNICAL PROPOSAL
PRELIMINARY
FOR REVIEW ONLY
ENGINEER: JONATHAN E. GERHART
LICENSE #: 43052
DATE: 4/19/2023

NO.	DATE	REVISION OR CHANGE ORDER DESCRIPTION	BY

LIGHTING PLAN - 6
STA. 2352+08.00 TO STA. 2365+85.00

I-10 CALCASIEU RIVER BRIDGE P3

LOUISIANA DEPARTMENT OF TRANSPORTATION & DEVELOPMENT

CBP CALCASIEU BRIDGE PARTNERS

E07_Lighting Plan - 6.dgn

4/19/2023

TECHNICAL PROPOSAL

LEGEND:

- LIGHT POLE, HIGHMAST, 327
- LUMINAIRE, HIGHMAST, 315
- UJB — UNDERGROUND JUNCTION BOX (UJB)
- DUCT (UNDERGROUND)
- LIGHT POLE, LOWMAST, 323
- LUMINAIRE, LOWMAST, 313
- BJB — BARRIER JUNCTION BOX (BJB)
- CASING, JACKED OR BORED
- LIGHT POLE, LOWMAST, 322
- LUMINAIRE, LOWMAST, 326
- DM — DUCT MARKER (CONCRETE)
- LUMINAIRE, LOWMAST, 311

N

Scale : 1" = 100'

POLE STATION LABEL:

POLE OFFSET FROM BASELINE (FEET)
STATION — STA. XXX+XX.XX (RAMP OR HIGHWAY), XX (RT./LT.)
[X,X,XX]-[XXX],[XXX]
POLE ID NO. { SECONDARY POWER CONTROLLER / CIRCUIT # / POLE ID #
LUMINAIRE (ITEM #)
POLE (ITEM #)

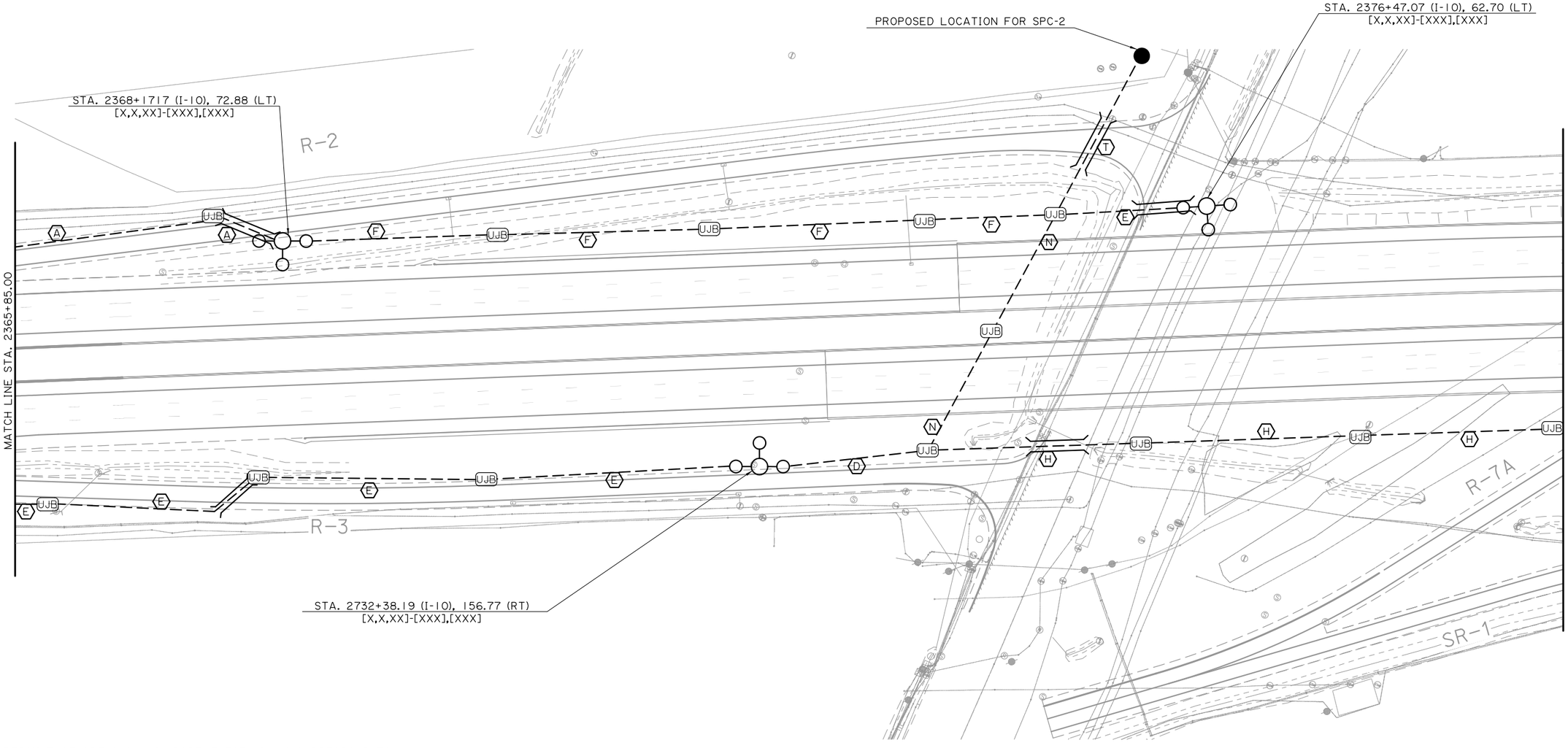

✡ NUMBER(S) THAT ARE SHOWN IN PARENTHESES (###) CORRESPOND TO ELECTRICAL EQUIPMENT ITEMS LISTED ON PLAN SHEETS 177 - 181.

SECTION "G"

LABEL	CONDUIT WITH CONDUCTORS	PAY ITEM
A	CONDUIT WITH CONDUCTORS (PVC/HDPE) (1-1/2") (2 #2, 1 #2 STRANDED GROUND)	822-02-XXXXX
D	CONDUIT WITH CONDUCTORS (PVC/HDPE) (1-1/2") (2 #8, 1 #8 STRANDED GROUND)	822-02-XXXXX
E	CONDUIT WITH CONDUCTORS (PVC/HDPE) (1-1/2") (2 #10, 1 #10 STRANDED GROUND)	822-02-XXXXX
F	CONDUIT WITH CONDUCTORS (PVC/HDPE) (1-1/2") (2 #2, 2 #10, 1 #2 STRANDED GROUND)	822-02-XXXXX
H	CONDUIT WITH CONDUCTORS (PVC/HDPE) (2") (2 #2, 2 #6, 1 #2 STRANDED GROUND)	822-02-XXXXX
N	CONDUIT WITH CONDUCTORS (PVC/HDPE) (2") (2 #2, 2 #6, 2 #8, 1 #2 STRANDED GROUND)	822-02-XXXXX
T	CONDUIT WITH CONDUCTORS (PVC/HDPE) (2-1/2") (2 #2, 2 #2, 2 #6, 2 #8, 2 #10, 1 #2 STRANDED GRD)	822-02-XXXXX

SPECIFIC NOTES:

1. THIS SHEET IS INTENDED ONLY AS A GENERAL OVERVIEW OF THE WORK REQUIRED. OMISSION FROM THIS SHEET OF ANY ITEM SHOWN ELSEWHERE IN THE PLANS DOES NOT RELIEVE THE CONTRACTOR FROM RESPONSIBILITY FOR ANY ASSOCIATED WORK.
2. LABELED CONDUIT RUNS SHOWN CROSSING ROADWAYS, DRIVEWAYS, ETC. SHALL BE INSTALLED IN PROTECTIVE HDPE CASING. SEE LAYOUT FOR LOCATIONS.
3. CONTRACTOR SHALL INSTALL ALL NEW ELECTRICAL WIRING, SPLICES, GROUNDING, AND APPURTENANCES, AS SPECIFIED BY THE ELECTRICAL DETAILS IN THESE PLANS AND MANUFACTURER'S SPECIFICATIONS.
4. REFER TO PLAN SHEET 128 FOR LIGHTING PLAN SECTIONS.
5. CONTRACTOR SHALL INSTALL (1) UNDERGROUND JUNCTION BOX "JB-2" IN ALL LOW MAST CONRETE MOWING APRONS.
6. REFER TO PLAN SHEETS 175-176 FOR CONSTRUCTION DETAILS OF LIGHT POLE FOUNDATION AND JUNCTION BOX INSTALLATION AT EACH MEDIAN BARRIER LOCATION.

E08_Lighting Plan - 7.dgn

SHEET NUMBER 135

PARISH	CONTROL SECTION	STATE PROJECT
CALCASIEU	450-91	H.003931

DESIGN	CHECK	DETAIL	CHECK	REVIEW	SERIES
E. CLAY	J. GERHART	E. CLAY	J. GERHART	C. LEDET	7 OF 26

TECHNICAL PROPOSAL
PRELIMINARY
FOR REVIEW ONLY
ENGINEER:
JONATHAN E. GERHART
LICENSE #:
43052
DATE:
4/19/2023

NO.	DATE	REVISION OR CHANGE ORDER DESCRIPTION	BY

LIGHTING PLAN - 7
STA. 2365+85.00 TO STA. 2379+75.00
I-10 CALCASIEU RIVER BRIDGE P3

LOUISIANA DEPARTMENT OF TRANSPORTATION & DEVELOPMENT
CBP CALCASIEU BRIDGE PARTNERS

TECHNICAL PROPOSAL

4/19/2023

LEGEND:

- LIGHT POLE, HIGHMAST, 327
- LUMINAIRE, HIGHMAST, 315
- UJB — UNDERGROUND JUNCTION BOX (UJB)
- DUCT (UNDERGROUND)
- LIGHT POLE, LOWMAST, 323
- LUMINAIRE, LOWMAST, 313
- BJB — BARRIER JUNCTION BOX (BJB)
- CASING, JACKED OR BORED
- LIGHT POLE, LOWMAST, 322
- LUMINAIRE, LOWMAST, 326
- DM — DUCT MARKER (CONCRETE)
- LUMINAIRE, LOWMAST, 311

N

Scale: 1" = 100'

POLE STATION LABEL:

POLE OFFSET FROM BASELINE (FEET)

STATION → STA. XXX+XX.XX (RAMP OR HIGHWAY), XX (RT./LT.)
[X,X,XX]-[XXX],[XXX]

POLE ID NO. { SECONDARY POWER CONTROLLER / CIRCUIT # / POLE ID #

LUMINAIRE (ITEM #)

POLE (ITEM #)

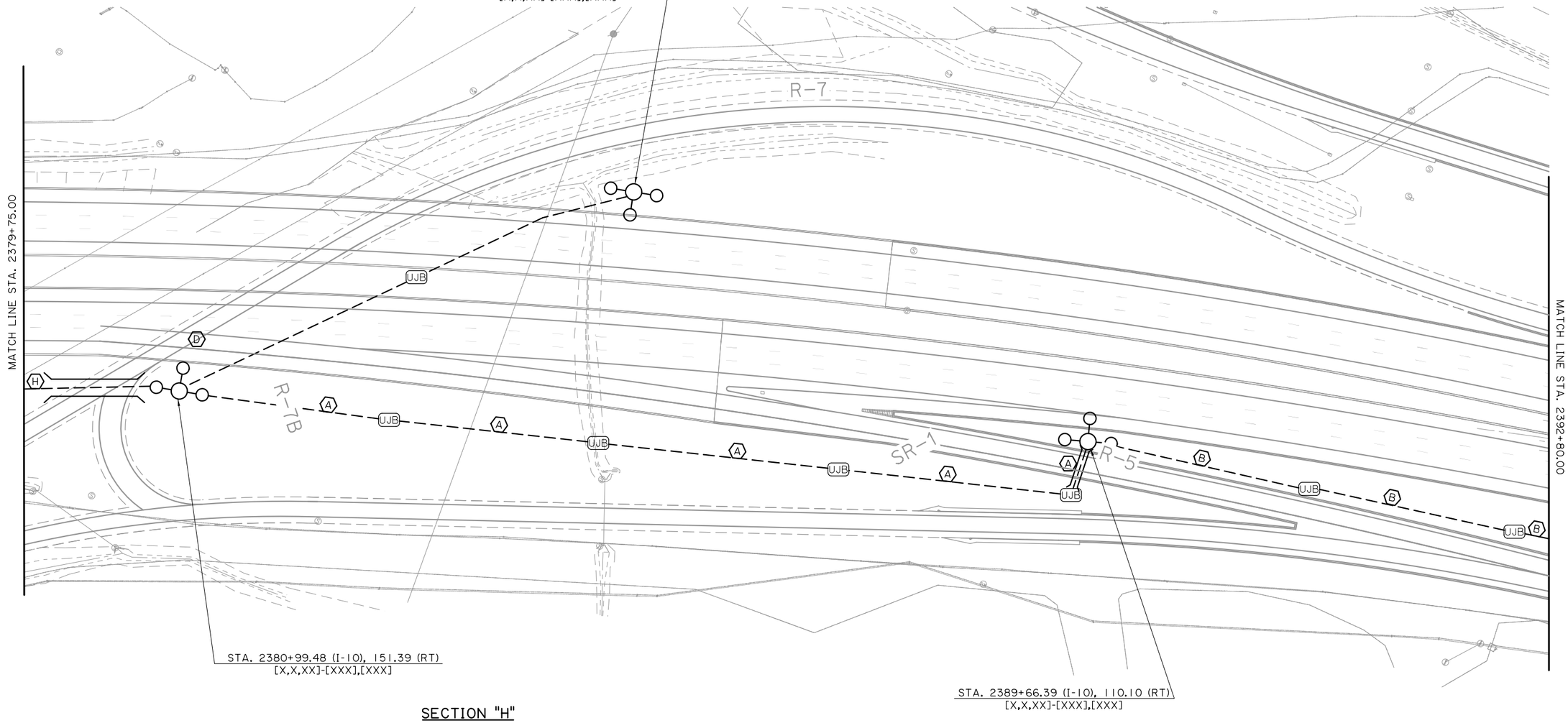

SECTION "H"

✡ NUMBER(S) THAT ARE SHOWN IN PARENTHESES (###) CORRESPOND TO ELECTRICAL EQUIPMENT ITEMS LISTED ON PLAN SHEETS 177 - 181.

SPECIFIC NOTES:

1. THIS SHEET IS INTENDED ONLY AS A GENERAL OVERVIEW OF THE WORK REQUIRED. OMISSION FROM THIS SHEET OF ANY ITEM SHOWN ELSEWHERE IN THE PLANS DOES NOT RELIEVE THE CONTRACTOR FROM RESPONSIBILITY FOR ANY ASSOCIATED WORK.
2. LABELED CONDUIT RUNS SHOWN CROSSING ROADWAYS, DRIVEWAYS, ETC. SHALL BE INSTALLED IN PROTECTIVE HDPE CASING. SEE LAYOUT FOR LOCATIONS.
3. CONTRACTOR SHALL INSTALL ALL NEW ELECTRICAL WIRING, SPLICES, GROUNDING, AND APPURTENANCES, AS SPECIFIED BY THE ELECTRICAL DETAILS IN THESE PLANS AND MANUFACTURER'S SPECIFICATIONS.
4. REFER TO PLAN SHEET 128 FOR LIGHTING PLAN SECTIONS.
5. CONTRACTOR SHALL INSTALL (1) UNDERGROUND JUNCTION BOX "JB-2" IN ALL LOW MAST CONRETE MOWING APRONS.
6. REFER TO PLAN SHEETS 175-176 FOR CONSTRUCTION DETAILS OF LIGHT POLE FOUNDATION AND JUNCTION BOX INSTALLATION AT EACH MEDIAN BARRIER LOCATION.

LABEL	CONDUIT WITH CONDUCTORS	PAY ITEM
A	CONDUIT WITH CONDUCTORS (PVC/HDPE) (1-1/2") (2 #2, 1 #2 STRANDED GROUND)	822-02-XXXXX
B	CONDUIT WITH CONDUCTORS (PVC/HDPE) (1-1/2") (2 #4, 1 #4 STRANDED GROUND)	822-02-XXXXX
D	CONDUIT WITH CONDUCTORS (PVC/HDPE) (1-1/2") (2 #8, 1 #8 STRANDED GROUND)	822-02-XXXXX
H	CONDUIT WITH CONDUCTORS (PVC/HDPE) (2") (2 #2, 2 #6, 1 #2 STRANDED GROUND)	822-02-XXXXX

SHEET NUMBER 136

PARISH	CONTROL SECTION	STATE PROJECT
CALCASIEU	450-91	H.003931

DESIGN	CHECK	DETAIL	CHECK	REVIEW	SERIES
E. CLAY	J. GERHART	E. CLAY	J. GERHART	C. LEDET	8 OF 26

TECHNICAL PROPOSAL

PRELIMINARY

FOR REVIEW ONLY

ENGINEER: JONATHAN E. GERHART

LICENSE #: 43052

DATE: 4/19/2023

NO.	DATE	REVISION OR CHANGE ORDER DESCRIPTION	BY

LIGHTING PLAN - 8

STA. 2379+75.00 TO STA. 2392+80.00

I-10 CALCASIEU RIVER BRIDGE P3

LOUISIANA DEPARTMENT OF TRANSPORTATION & DEVELOPMENT

CALCASIEU BRIDGE PARTNERS

E09_Lighting Plan - 8.dgn

TECHNICAL PROPOSAL

4/19/2023

LEGEND:

- LIGHT POLE, HIGHMAST, 327
- LUMINAIRE, HIGHMAST, 315
- UJB — UNDERGROUND JUNCTION BOX (UJB)
- DUCT (UNDERGROUND)
- LIGHT POLE, LOWMAST, 323
- LUMINAIRE, LOWMAST, 313
- BJB — BARRIER JUNCTION BOX (BJB)
- CASING, JACKED OR BORED
- LIGHT POLE, LOWMAST, 322
- LUMINAIRE, LOWMAST, 326
- DM — DUCT MARKER (CONCRETE)
- LUMINAIRE, LOWMAST, 311

N

Scale : 1" = 100'

POLE STATION LABEL:

POLE OFFSET FROM BASELINE (FEET)

STATION → STA. XXX+XX.XX (RAMP OR HIGHWAY), XX (RT./LT.)
[X,X,XX]-[XXX],[XXX]

POLE ID NO. { SECONDARY POWER CONTROLLER, CIRCUIT #, POLE ID # } — LUMINAIRE (ITEM #), POLE (ITEM #)

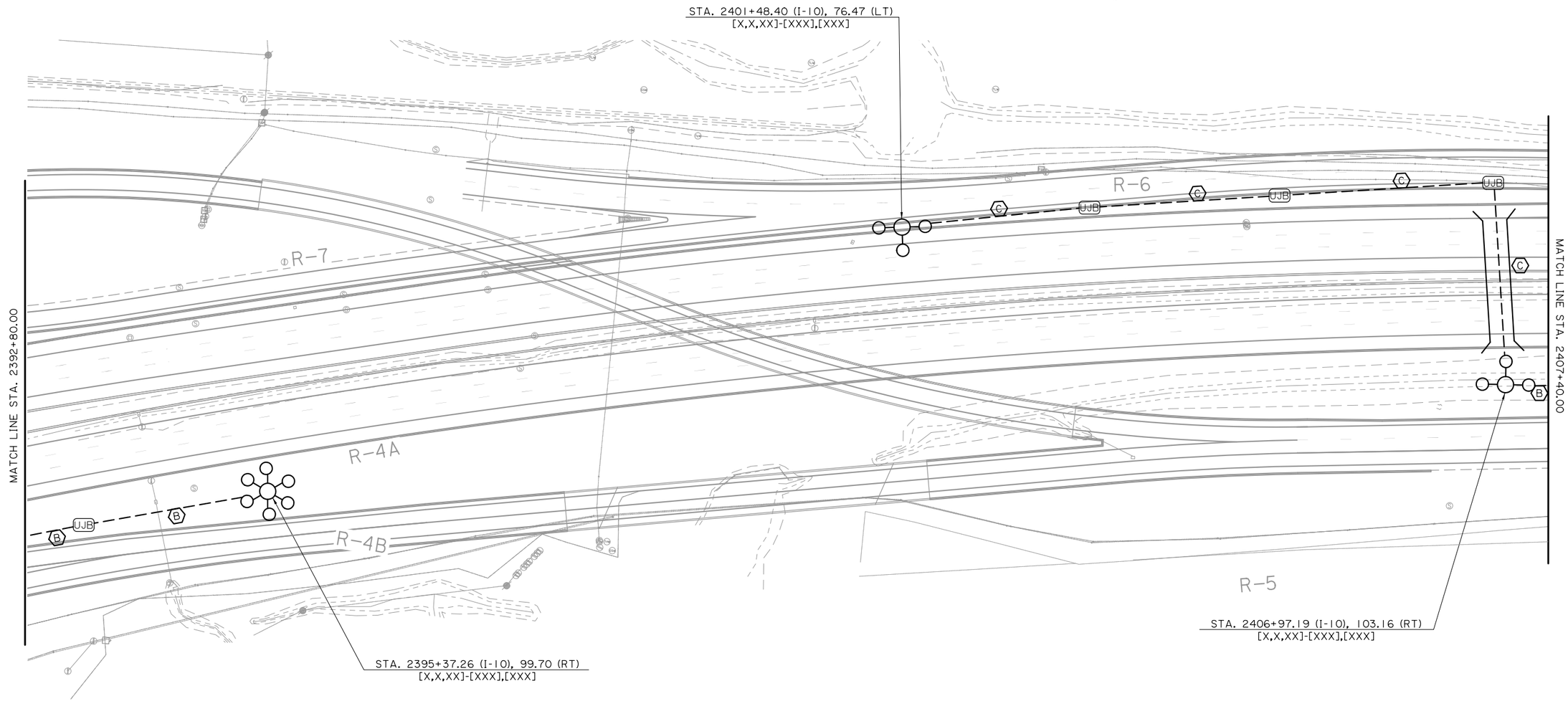

SECTION "I"

✡ NUMBER(S) THAT ARE SHOWN IN PARENTHESES (###) CORRESPOND TO ELECTRICAL EQUIPMENT ITEMS LISTED ON PLAN SHEETS 177 - 181.

SPECIFIC NOTES:

1. THIS SHEET IS INTENDED ONLY AS A GENERAL OVERVIEW OF THE WORK REQUIRED. OMISSION FROM THIS SHEET OF ANY ITEM SHOWN ELSEWHERE IN THE PLANS DOES NOT RELIEVE THE CONTRACTOR FROM RESPONSIBILITY FOR ANY ASSOCIATED WORK.
2. LABELED CONDUIT RUNS SHOWN CROSSING ROADWAYS, DRIVEWAYS, ETC. SHALL BE INSTALLED IN PROTECTIVE HDPE CASING. SEE LAYOUT FOR LOCATIONS.
3. CONTRACTOR SHALL INSTALL ALL NEW ELECTRICAL WIRING, SPLICES, GROUNDING, AND APPURTENANCES, AS SPECIFIED BY THE ELECTRICAL DETAILS IN THESE PLANS AND MANUFACTURER'S SPECIFICATIONS.
4. REFER TO PLAN SHEET 128 FOR LIGHTING PLAN SECTIONS.
5. CONTRACTOR SHALL INSTALL (1) UNDERGROUND JUNCTION BOX "JB-2" IN ALL LOW MAST CONRETE MOWING APRONS.
6. REFER TO PLAN SHEETS 175-176 FOR CONSTRUCTION DETAILS OF LIGHT POLE FOUNDATION AND JUNCTION BOX INSTALLATION AT EACH MEDIAN BARRIER LOCATION.

LABEL	CONDUIT WITH CONDUCTORS	PAY ITEM
(B)	CONDUIT WITH CONDUCTORS (PVC/HDPE) (1-1/2") (2 #4, 1 #4 STRANDED GROUND)	822-02-XXXXX
(C)	CONDUIT WITH CONDUCTORS (PVC/HDPE) (1-1/2") (2 #6, 1 #6 STRANDED GROUND)	822-02-XXXXX

E10_Lighting Plan - 9.dgn

SHEET NUMBER 137

PARISH	CONTROL SECTION	STATE PROJECT
CALCASIEU	450-91	H.003931

DESIGN	CHECK	DETAIL	CHECK	REVIEW	SERIES
E. CLAY	J. GERHART	E. CLAY	J. GERHART	C. LEDET	9 OF 26

TECHNICAL PROPOSAL
PRELIMINARY
FOR REVIEW ONLY
ENGINEER:
JONATHAN E. GERHART
LICENSE #:
43052
DATE:
4/19/2023

NO.	DATE	REVISION OR CHANGE ORDER DESCRIPTION	BY

LIGHTING PLAN - 9
STA. 2392+80.00 TO STA. 2407+40.00

I-10 CALCASIEU RIVER BRIDGE P3

DOTD LOUISIANA DEPARTMENT OF TRANSPORTATION & DEVELOPMENT

CBP CALCASIEU BRIDGE PARTNERS

4/19/2023

TECHNICAL PROPOSAL

LEGEND:

- LIGHT POLE, HIGHMAST, 327
- LUMINAIRE, HIGHMAST, 315
- UJB — UNDERGROUND JUNCTION BOX (UJB)
- DUCT (UNDERGROUND)
- LIGHT POLE, LOWMAST, 323
- LUMINAIRE, LOWMAST, 313
- BJB — BARRIER JUNCTION BOX (BJB)
- CASING, JACKED OR BORED
- LIGHT POLE, LOWMAST, 322
- LUMINAIRE, LOWMAST, 326
- DM — DUCT MARKER (CONCRETE)
- LUMINAIRE, LOWMAST, 311

N

Scale : 1" = 100'

POLE STATION LABEL:

POLE OFFSET FROM BASELINE (FEET)

STATION — STA. XXX+XX.XX (RAMP OR HIGHWAY), XX (RT./LT.)
[X,X,XX]-[XXX],[XXX]

POLE ID NO.
- SECONDARY POWER CONTROLLER
- CIRCUIT #
- POLE ID #

- LUMINAIRE (ITEM #)
- POLE (ITEM #)

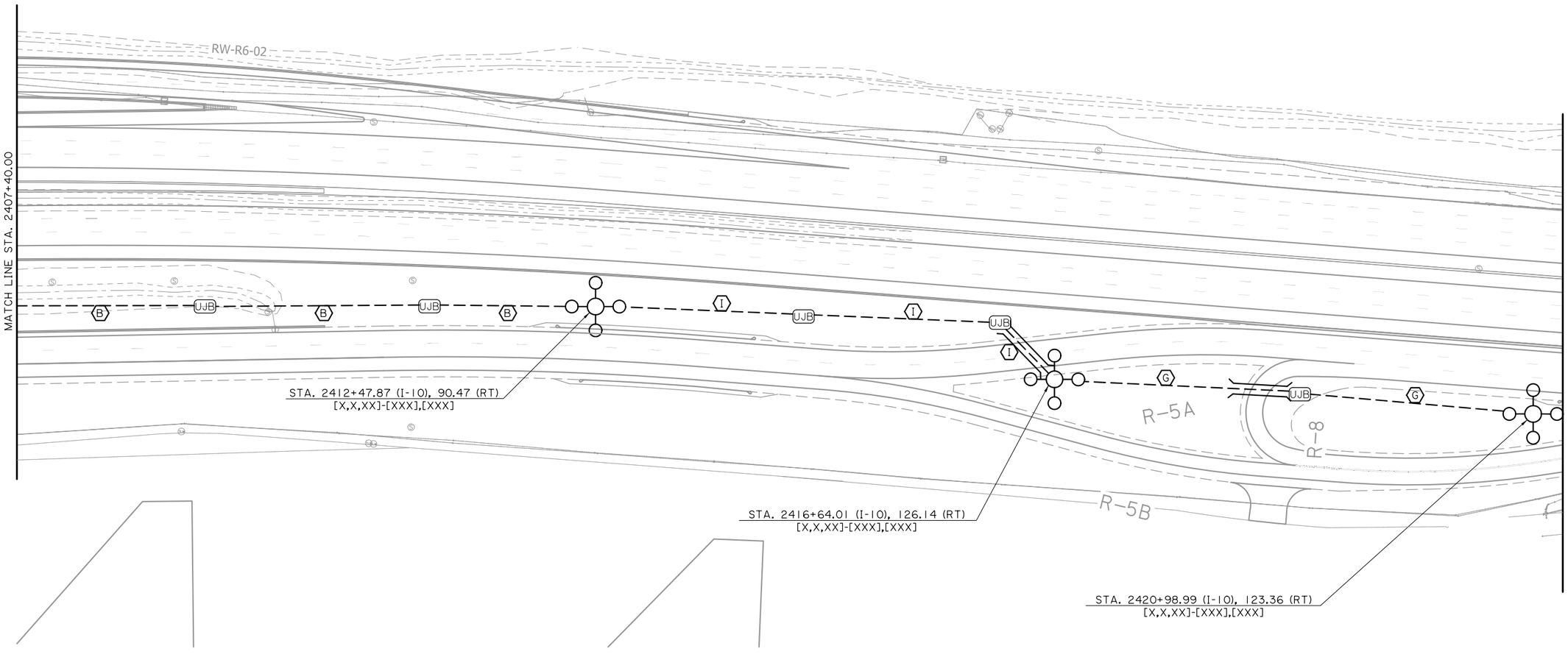

SECTION "J"

SPECIFIC NOTES:

1. THIS SHEET IS INTENDED ONLY AS A GENERAL OVERVIEW OF THE WORK REQUIRED. OMISSION FROM THIS SHEET OF ANY ITEM SHOWN ELSEWHERE IN THE PLANS DOES NOT RELIEVE THE CONTRACTOR FROM RESPONSIBILITY FOR ANY ASSOCIATED WORK.
2. LABELED CONDUIT RUNS SHOWN CROSSING ROADWAYS, DRIVEWAYS, ETC. SHALL BE INSTALLED IN PROTECTIVE HDPE CASING. SEE LAYOUT FOR LOCATIONS.
3. CONTRACTOR SHALL INSTALL ALL NEW ELECTRICAL WIRING, SPLICES, GROUNDING, AND APPURTENANCES, AS SPECIFIED BY THE ELECTRICAL DETAILS IN THESE PLANS AND MANUFACTURER'S SPECIFICATIONS.
4. REFER TO PLAN SHEET 128 FOR LIGHTING PLAN SECTIONS.
5. CONTRACTOR SHALL INSTALL (1) UNDERGROUND JUNCTION BOX "JB-2" IN ALL LOW MAST CONRETE MOWING APRONS.
6. REFER TO PLAN SHEETS 175-176 FOR CONSTRUCTION DETAILS OF LIGHT POLE FOUNDATION AND JUNCTION BOX INSTALLATION AT EACH MEDIAN BARRIER LOCATION.

✡ NUMBER(S) THAT ARE SHOWN IN PARENTHESES (###) CORRESPOND TO ELECTRICAL EQUIPMENT ITEMS LISTED ON PLAN SHEETS 177 - 181.

LABEL	CONDUIT WITH CONDUCTORS	PAY ITEM
B	CONDUIT WITH CONDUCTORS (PVC/HDPE) (1-1/2") (2 #4, 1 #4 STRANDED GROUND)	822-02-XXXXX
G	CONDUIT WITH CONDUCTORS (PVC/HDPE) (1-1/2") (2 #4, 2 #6, 1 #4 STRANDED GROUND)	822-02-XXXXX
I	CONDUIT WITH CONDUCTORS (PVC/HDPE) (1-1/2") (2 #4, 2 #8, 1 #4 STRANDED GROUND)	822-02-XXXXX

SHEET NUMBER 138

PARISH	CONTROL SECTION	STATE PROJECT
CALCASIEU	450-91	H.003931

	DESIGN	CHECK	DETAIL	CHECK	REVIEW	SERIES
	E. CLAY	J. GERHART	E. CLAY	J. GERHART	C. LEDET	10 OF 26

TECHNICAL PROPOSAL

PRELIMINARY

FOR REVIEW ONLY

ENGINEER: JONATHAN E. GERHART

LICENSE #: 43052

DATE: 4/19/2023

NO.	DATE	REVISION OR CHANGE ORDER DESCRIPTION	BY

LIGHTING PLAN - 10

STA. 2407+40.00 TO STA. 2421+25.00

I-10 CALCASIEU RIVER BRIDGE P3

LOUISIANA DEPARTMENT OF TRANSPORTATION & DEVELOPMENT

CBP CALCASIEU BRIDGE PARTNERS

E11_Lighting Plan - 10.dgn

TECHNICAL PROPOSAL

4/19/2023

LEGEND:

- LIGHT POLE, HIGHMAST, 327
- LUMINAIRE, HIGHMAST, 315
- UJB — UNDERGROUND JUNCTION BOX (UJB)
- DUCT (UNDERGROUND)
- LIGHT POLE, LOWMAST, 323
- LUMINAIRE, LOWMAST, 313
- BJB — BARRIER JUNCTION BOX (BJB)
- CASING, JACKED OR BORED
- LIGHT POLE, LOWMAST, 322
- LUMINAIRE, LOWMAST, 326
- DM — DUCT MARKER (CONCRETE)
- LUMINAIRE, LOWMAST, 311

N

Scale : 1" = 100'

POLE STATION LABEL:

POLE OFFSET FROM BASELINE (FEET)

STATION — STA. XXX+XX.XX (RAMP OR HIGHWAY), XX (RT./LT.)
[X,X,XX]-[XXX],[XXX]

POLE ID NO.: SECONDARY POWER CONTROLLER / CIRCUIT # / POLE ID #

LUMINAIRE (ITEM #)

POLE (ITEM #)

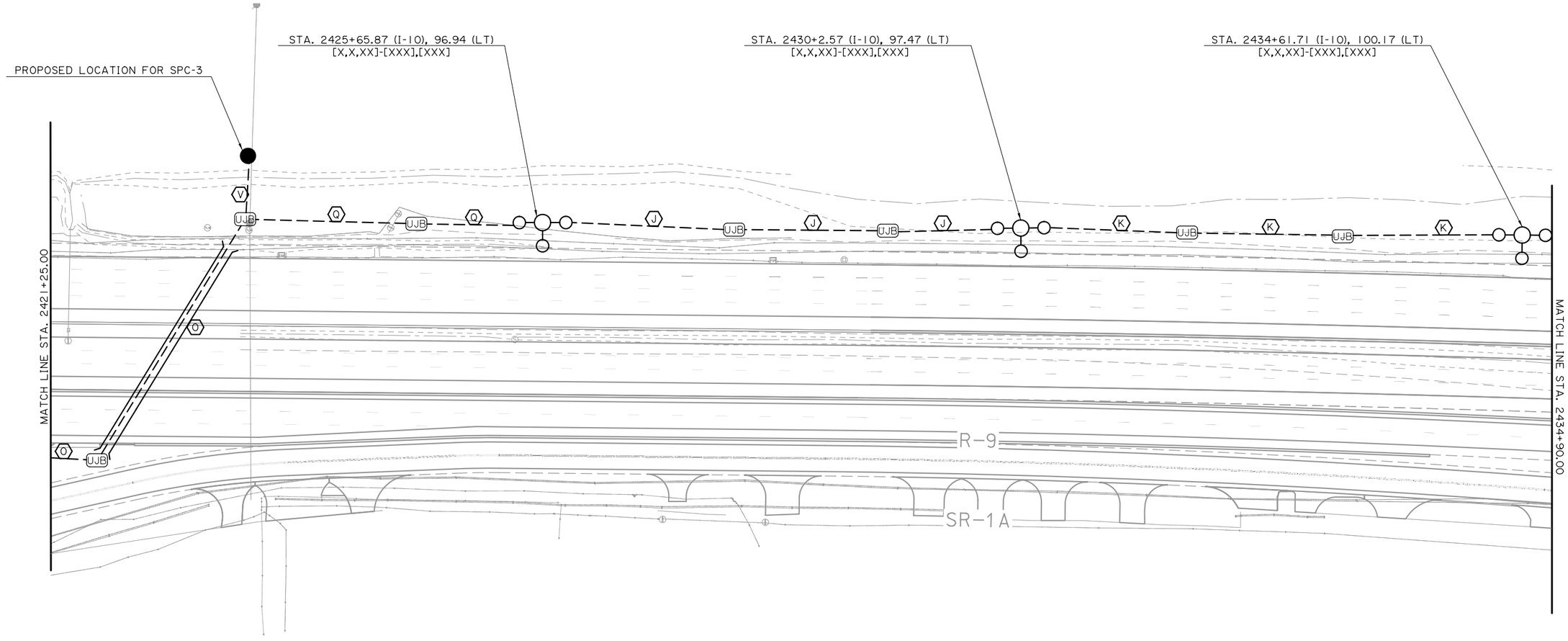

SECTION "K"

✡ NUMBER(S) THAT ARE SHOWN IN PARENTHESES (###) CORRESPOND TO ELECTRICAL EQUIPMENT ITEMS LISTED ON PLAN SHEETS 177 - 181.

SPECIFIC NOTES:

1. THIS SHEET IS INTENDED ONLY AS A GENERAL OVERVIEW OF THE WORK REQUIRED. OMISSION FROM THIS SHEET OF ANY ITEM SHOWN ELSEWHERE IN THE PLANS DOES NOT RELIEVE THE CONTRACTOR FROM RESPONSIBILITY FOR ANY ASSOCIATED WORK.
2. LABELED CONDUIT RUNS SHOWN CROSSING ROADWAYS, DRIVEWAYS, ETC. SHALL BE INSTALLED IN PROTECTIVE HDPE CASING. SEE LAYOUT FOR LOCATIONS.
3. CONTRACTOR SHALL INSTALL ALL NEW ELECTRICAL WIRING, SPLICES, GROUNDING, AND APPURTENANCES, AS SPECIFIED BY THE ELECTRICAL DETAILS IN THESE PLANS AND MANUFACTURER'S SPECIFICATIONS.
4. REFER TO PLAN SHEET 128 FOR LIGHTING PLAN SECTIONS.
5. CONTRACTOR SHALL INSTALL (1) UNDERGROUND JUNCTION BOX "JB-2" IN ALL LOW MAST CONRETE MOWING APRONS.
6. REFER TO PLAN SHEETS 175-176 FOR CONSTRUCTION DETAILS OF LIGHT POLE FOUNDATION AND JUNCTION BOX INSTALLATION AT EACH MEDIAN BARRIER LOCATION.

LABEL	CONDUIT WITH CONDUCTORS	PAY ITEM
K	CONDUIT WITH CONDUCTORS (PVC/HDPE) (1") (2 #10, 2 #10, 1 #10 STRANDED GROUND)	822-02-XXXXX
J	CONDUIT WITH CONDUCTORS (PVC/HDPE) (1") (2 #8, 2 #10, 1 #8 STRANDED GROUND)	822-02-XXXXX
Q	CONDUIT WITH CONDUCTORS (PVC/HDPE) (1-1/4") (2 #8, 2 #10, 2 #10, 1 #8 STRANDED GROUND)	822-02-XXXXX
O	CONDUIT WITH CONDUCTORS (PVC/HDPE) (1-1/2") (2 #4, 2 #6, 2 #10, 1 #4 STRANDED GROUND)	822-02-XXXXX
V	CONDUIT WITH CONDUCTORS (PVC/HDPE) (2") (2 #4, 2 #6, 2 #8, 2 #10, 2 #10, 1 #4 STRANDED GROUND)	822-02-XXXXX

SHEET NUMBER 139

PARISH	CONTROL SECTION	STATE PROJECT
CALCASIEU	450-91	H.003931

DESIGN	CHECK	DETAIL	CHECK	REVIEW	SERIES
E. CLAY	J. GERHART	E. CLAY	J. GERHART	C. LEDET	11 OF 26

TECHNICAL PROPOSAL

PRELIMINARY

FOR REVIEW ONLY

ENGINEER:
JONATHAN E. GERHART

LICENSE #:
43052

DATE:
4/19/2023

NO.	DATE	REVISION OR CHANGE ORDER DESCRIPTION	BY

LIGHTING PLAN - 11

STA. 2421+25.00 TO STA. 2434+90.00

I-10 CALCASIEU RIVER BRIDGE P3

DOTD LOUISIANA DEPARTMENT OF TRANSPORTATION & DEVELOPMENT

CBP CALCASIEU BRIDGE PARTNERS

E12_Lighting Plan - 11.dgn

4/19/2023

TECHNICAL PROPOSAL

LEGEND:

- LIGHT POLE, HIGHMAST, 327
- LUMINAIRE, HIGHMAST, 315
- UJB — UNDERGROUND JUNCTION BOX (UJB)
- DUCT (UNDERGROUND)
- LIGHT POLE, LOWMAST, 323
- LUMINAIRE, LOWMAST, 313
- BJB — BARRIER JUNCTION BOX (BJB)
- CASING, JACKED OR BORED
- LIGHT POLE, LOWMAST, 322
- LUMINAIRE, LOWMAST, 326
- DM — DUCT MARKER (CONCRETE)
- LUMINAIRE, LOWMAST, 311

N

Scale : 1" = 100'

POLE STATION LABEL:

POLE OFFSET FROM BASELINE (FEET)

STATION — STA. XXX+XX.XX (RAMP OR HIGHWAY), XX (RT./LT.)
[X,X,XX]-[XXX],[XXX]

POLE ID NO.: SECONDARY POWER CONTROLLER, CIRCUIT #, POLE ID #

LUMINAIRE (ITEM #)

POLE (ITEM #)

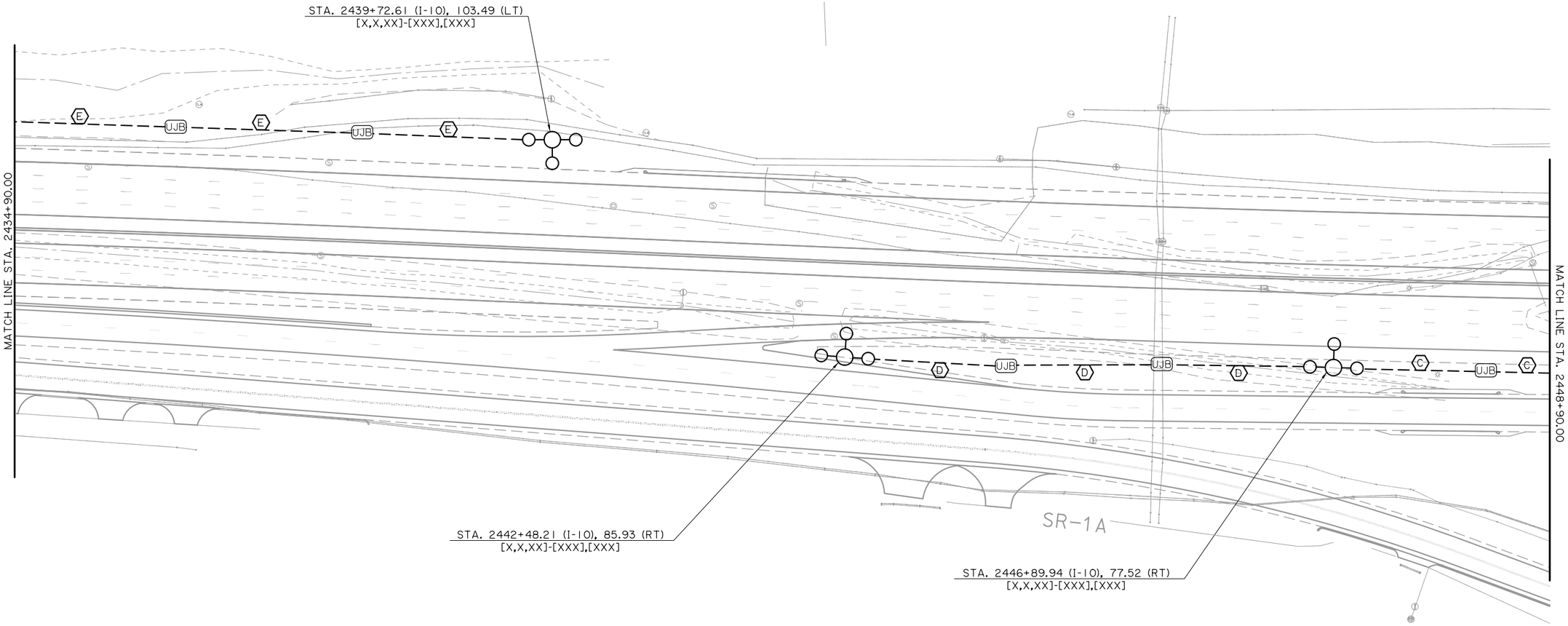

SECTION "L"

✡ NUMBER(S) THAT ARE SHOWN IN PARENTHESES (###) CORRESPOND TO ELECTRICAL EQUIPMENT ITEMS LISTED ON PLAN SHEETS 177 - 181.

SPECIFIC NOTES:

1. THIS SHEET IS INTENDED ONLY AS A GENERAL OVERVIEW OF THE WORK REQUIRED. OMISSION FROM THIS SHEET OF ANY ITEM SHOWN ELSEWHERE IN THE PLANS DOES NOT RELIEVE THE CONTRACTOR FROM RESPONSIBILITY FOR ANY ASSOCIATED WORK.
2. LABELED CONDUIT RUNS SHOWN CROSSING ROADWAYS, DRIVEWAYS, ETC. SHALL BE INSTALLED IN PROTECTIVE HDPE CASING. SEE LAYOUT FOR LOCATIONS.
3. CONTRACTOR SHALL INSTALL ALL NEW ELECTRICAL WIRING, SPLICES, GROUNDING, AND APPURTENANCES, AS SPECIFIED BY THE ELECTRICAL DETAILS IN THESE PLANS AND MANUFACTURER'S SPECIFICATIONS.
4. REFER TO PLAN SHEET 128 FOR LIGHTING PLAN SECTIONS.
5. CONTRACTOR SHALL INSTALL (1) UNDERGROUND JUNCTION BOX "JB-2" IN ALL LOW MAST CONRETE MOWING APRONS.
6. REFER TO PLAN SHEETS 175-176 FOR CONSTRUCTION DETAILS OF LIGHT POLE FOUNDATION AND JUNCTION BOX INSTALLATION AT EACH MEDIAN BARRIER LOCATION.

LABEL	CONDUIT WITH CONDUCTORS	PAY ITEM
C	CONDUIT WITH CONDUCTORS (PVC/HDPE) (1-1/2") (2 #6, 1 #6 STRANDED GROUND)	822-02-XXXXX
D	CONDUIT WITH CONDUCTORS (PVC/HDPE) (1-1/2") (2 #8, 1 #8 STRANDED GROUND)	822-02-XXXXX
E	CONDUIT WITH CONDUCTORS (PVC/HDPE) (1-1/2") (2 #10, 1 #10 STRANDED GROUND)	822-02-XXXXX

SHEET NUMBER	140
PARISH	CALCASIEU
CONTROL SECTION	450-91
STATE PROJECT	H.003931
DESIGN	E. CLAY
CHECK	J. GERHART
DETAIL	E. CLAY
CHECK	J. GERHART
REVIEW	C. LEDET
SERIES #	12 OF 26

TECHNICAL PROPOSAL

PRELIMINARY

FOR REVIEW ONLY

ENGINEER:
JONATHAN E. GERHART

LICENSE #:
43052

DATE:
4/19/2023

NO.	DATE	REVISION OR CHANGE ORDER DESCRIPTION	BY

LIGHTING PLAN - 12

STA. 2434+90.00 TO STA. 2448+90.00

I-10 CALCASIEU RIVER BRIDGE P3

LOUISIANA DEPARTMENT OF TRANSPORTATION & DEVELOPMENT

CBP CALCASIEU BRIDGE PARTNERS

E13_Lighting Plan - 12.dgn

TECHNICAL PROPOSAL

4/19/2023

LEGEND:

- LIGHT POLE, HIGHMAST, 327
- LUMINAIRE, HIGHMAST, 315
- UJB — UNDERGROUND JUNCTION BOX (UJB)
- DUCT (UNDERGROUND)
- LIGHT POLE, LOWMAST, 323
- LUMINAIRE, LOWMAST, 313
- BJB — BARRIER JUNCTION BOX (BJB)
- CASING, JACKED OR BORED
- LIGHT POLE, LOWMAST, 322
- LUMINAIRE, LOWMAST, 326
- DM — DUCT MARKER (CONCRETE)
- LUMINAIRE, LOWMAST, 311

N

Scale : 1" = 100'

POLE STATION LABEL:

POLE OFFSET FROM BASELINE (FEET)

STATION — STA. XXX+XX.XX (RAMP OR HIGHWAY), XX (RT./LT.)
[X,X,XX]-[XXX],[XXX]

POLE ID NO. { SECONDARY POWER CONTROLLER / CIRCUIT # / POLE ID #

LUMINAIRE (ITEM #)

POLE (ITEM #)

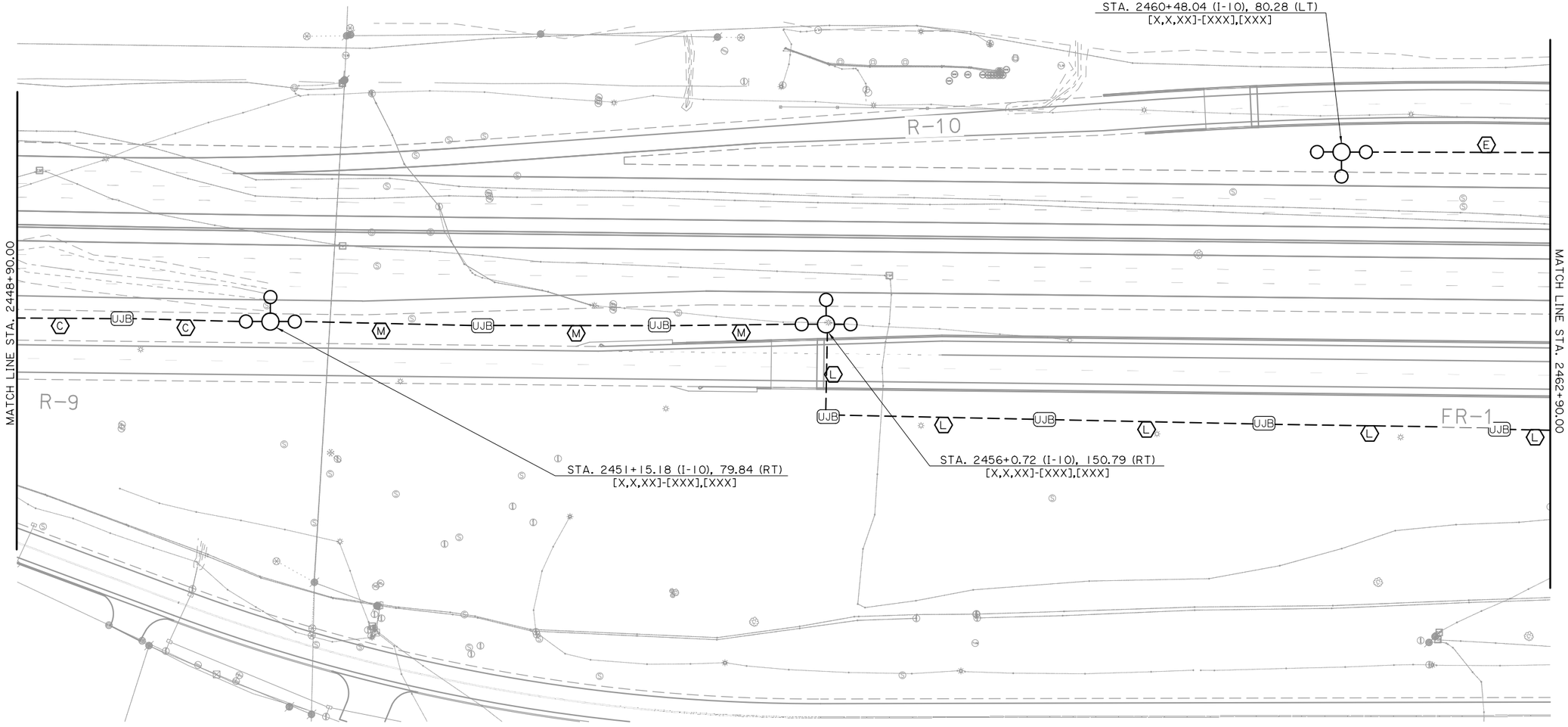

SECTION "M"

✡ NUMBER(S) THAT ARE SHOWN IN PARENTHESES (###) CORRESPOND TO ELECTRICAL EQUIPMENT ITEMS LISTED ON PLAN SHEETS 177 - 181.

LABEL	CONDUIT WITH CONDUCTORS	PAY ITEM
C	CONDUIT WITH CONDUCTORS (PVC/HDPE) (1-1/2") (2 #6, 1 #6 STRANDED GROUND)	822-02-XXXXX
E	CONDUIT WITH CONDUCTORS (PVC/HDPE) (1-1/2") (2 #10, 1 #10 STRANDED GROUND)	822-02-XXXXX
L	CONDUIT WITH CONDUCTORS (PVC/HDPE) (1-1/4") (2 #6, 2 #8, 1 #6 STRANDED GROUND)	822-02-XXXXX
M	CONDUIT WITH CONDUCTORS (PVC/HDPE) (1-1/4") (2 #6, 2 #10, 1 #6 STRANDED GROUND)	822-02-XXXXX

SPECIFIC NOTES:

1. THIS SHEET IS INTENDED ONLY AS A GENERAL OVERVIEW OF THE WORK REQUIRED. OMISSION FROM THIS SHEET OF ANY ITEM SHOWN ELSEWHERE IN THE PLANS DOES NOT RELIEVE THE CONTRACTOR FROM RESPONSIBILITY FOR ANY ASSOCIATED WORK.
2. LABELED CONDUIT RUNS SHOWN CROSSING ROADWAYS, DRIVEWAYS, ETC. SHALL BE INSTALLED IN PROTECTIVE HDPE CASING. SEE LAYOUT FOR LOCATIONS.
3. CONTRACTOR SHALL INSTALL ALL NEW ELECTRICAL WIRING, SPLICES, GROUNDING, AND APPURTENANCES, AS SPECIFIED BY THE ELECTRICAL DETAILS IN THESE PLANS AND MANUFACTURER'S SPECIFICATIONS.
4. REFER TO PLAN SHEET 128 FOR LIGHTING PLAN SECTIONS.
5. CONTRACTOR SHALL INSTALL (1) UNDERGROUND JUNCTION BOX "JB-2" IN ALL LOW MAST CONRETE MOWING APRONS.
6. REFER TO PLAN SHEETS 175-176 FOR CONSTRUCTION DETAILS OF LIGHT POLE FOUNDATION AND JUNCTION BOX INSTALLATION AT EACH MEDIAN BARRIER LOCATION.

B14_Lighting Plan - 13.dgn

SHEET NUMBER 141

PARISH	CONTROL SECTION	STATE PROJECT
CALCASIEU	450-91	H.003931

DESIGN	CHECK	DETAIL	CHECK	REVIEW	SERIES
E. CLAY	J. GERHART	E. CLAY	J. GERHART	C. LEDET	13 OF 26

TECHNICAL PROPOSAL

PRELIMINARY

FOR REVIEW ONLY

ENGINEER: JONATHAN E. GERHART

LICENSE #: 43052

DATE: 4/19/2023

NO.	DATE	REVISION OR CHANGE ORDER DESCRIPTION	BY

LIGHTING PLAN - 13

STA. 2448+90.00 TO STA. 2462+90.00

I-10 CALCASIEU RIVER BRIDGE P3

DOTD LOUISIANA DEPARTMENT OF TRANSPORTATION & DEVELOPMENT

CBP CALCASIEU BRIDGE PARTNERS

4/19/2023

TECHNICAL PROPOSAL

LEGEND:

- LIGHT POLE, HIGHMAST, 327
- LUMINAIRE, HIGHMAST, 315
- UJB — UNDERGROUND JUNCTION BOX (UJB)
- DUCT (UNDERGROUND)
- LIGHT POLE, LOWMAST, 323
- LUMINAIRE, LOWMAST, 313
- BJB — BARRIER JUNCTION BOX (BJB)
- CASING, JACKED OR BORED
- LIGHT POLE, LOWMAST, 322
- LUMINAIRE, LOWMAST, 326
- DM — DUCT MARKER (CONCRETE)
- LUMINAIRE, LOWMAST, 311

Scale : 1" = 100'

POLE STATION LABEL:

POLE OFFSET FROM BASELINE (FEET)
STATION — STA. XXX+XX.XX (RAMP OR HIGHWAY), XX (RT./LT.)
[X,X,XX]-[XXX],[XXX]
SECONDARY POWER CONTROLLER
POLE ID NO.
CIRCUIT #
POLE ID #
LUMINAIRE (ITEM #)
POLE (ITEM #)

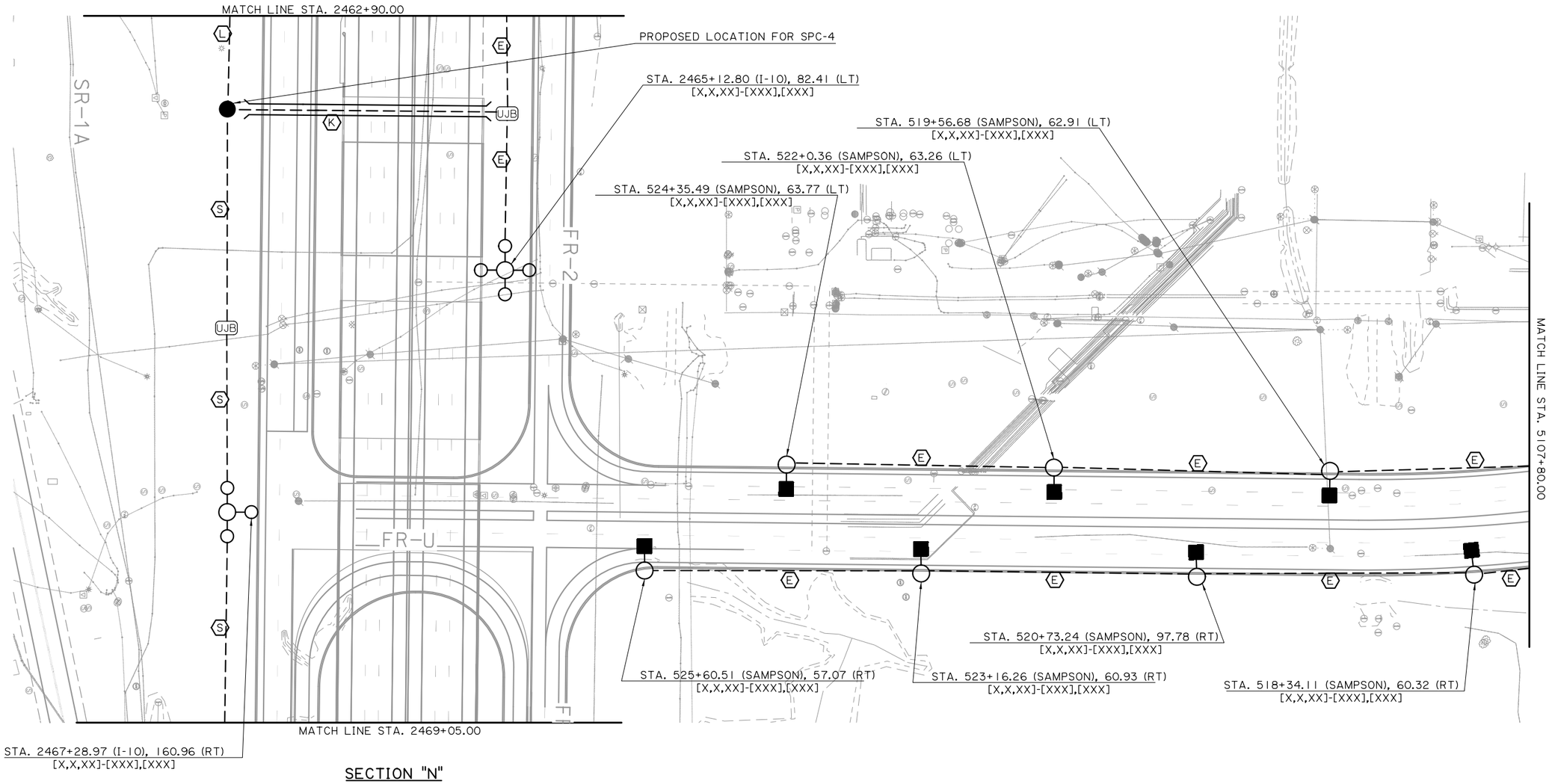

SECTION "N"

✡ NUMBER(S) THAT ARE SHOWN IN PARENTHESES (###) CORRESPOND TO ELECTRICAL EQUIPMENT ITEMS LISTED ON PLAN SHEETS 177 - 181.

SPECIFIC NOTES:

1. THIS SHEET IS INTENDED ONLY AS A GENERAL OVERVIEW OF THE WORK REQUIRED. OMISSION FROM THIS SHEET OF ANY ITEM SHOWN ELSEWHERE IN THE PLANS DOES NOT RELIEVE THE CONTRACTOR FROM RESPONSIBILITY FOR ANY ASSOCIATED WORK.
2. LABELED CONDUIT RUNS SHOWN CROSSING ROADWAYS, DRIVEWAYS, ETC. SHALL BE INSTALLED IN PROTECTIVE HDPE CASING. SEE LAYOUT FOR LOCATIONS.
3. CONTRACTOR SHALL INSTALL ALL NEW ELECTRICAL WIRING, SPLICES, GROUNDING, AND APPURTENANCES, AS SPECIFIED BY THE ELECTRICAL DETAILS IN THESE PLANS AND MANUFACTURER'S SPECIFICATIONS.
4. REFER TO PLAN SHEET 128 FOR LIGHTING PLAN SECTIONS.
5. CONTRACTOR SHALL INSTALL (1) UNDERGROUND JUNCTION BOX "JB-2" IN ALL LOW MAST CONRETE MOWING APRONS.
6. REFER TO PLAN SHEETS 175-176 FOR CONSTRUCTION DETAILS OF LIGHT POLE FOUNDATION AND JUNCTION BOX INSTALLATION AT EACH MEDIAN BARRIER LOCATION.

LABEL	CONDUIT WITH CONDUCTORS	PAY ITEM
(E)	CONDUIT WITH CONDUCTORS (PVC/HDPE) (1-1/2") (2 #10, 1 #10 STRANDED GROUND)	822-02-XXXXX
(K)	CONDUIT WITH CONDUCTORS (PVC/HDPE) (1") (2 #10, 2 #10, 1 #10 STRANDED GROUND)	822-02-XXXXX
(L)	CONDUIT WITH CONDUCTORS (PVC/HDPE) (1-1/4") (2 #6, 2 #8, 1 #6 STRANDED GROUND)	822-02-XXXXX
(S)	CONDUIT WITH CONDUCTORS (PVC/HDPE) (1-1/4") (2 #8, 2 #8, 2 #10, 1 #8 STRANDED GROUND)	822-02-XXXXX

SHEET NUMBER	142
PARISH	CALCASIEU
CONTROL SECTION	450-91
STATE PROJECT	H.003931

DESIGN	E. CLAY
CHECK	J. GERHART
DETAIL	E. CLAY
CHECK	J. GERHART
REVIEW	C. LEDET
SERIES	14 OF 26

TECHNICAL PROPOSAL
PRELIMINARY
FOR REVIEW ONLY
ENGINEER:
JONATHAN E. GERHART
LICENSE #:
43052
DATE:
4/19/2023

NO.	DATE	REVISION OR CHANGE ORDER DESCRIPTION	BY

LIGHTING PLAN - 14
STA. 2462+90.00 TO STA. 2469+05.00
TO STA. 5107+80.00

I-10 CALCASIEU RIVER BRIDGE P3

LOUISIANA DEPARTMENT OF TRANSPORTATION & DEVELOPMENT

CALCASIEU BRIDGE PARTNERS

E15_Lighting Plan - 14.dgn

TECHNICAL PROPOSAL

4/19/2023

LEGEND:

- LIGHT POLE, HIGHMAST, 327
- LUMINAIRE, HIGHMAST, 315
- UJB — UNDERGROUND JUNCTION BOX (UJB)
- DUCT (UNDERGROUND)
- LIGHT POLE, LOWMAST, 323
- LUMINAIRE, LOWMAST, 313
- BJB — BARRIER JUNCTION BOX (BJB)
- CASING, JACKED OR BORED
- LIGHT POLE, LOWMAST, 322
- LUMINAIRE, LOWMAST, 326
- DM — DUCT MARKER (CONCRETE)
- LUMINAIRE, LOWMAST, 311

Scale : 1" = 100'

N

POLE STATION LABEL:

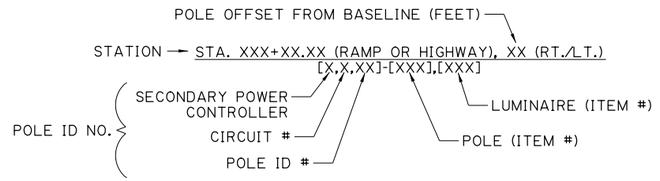

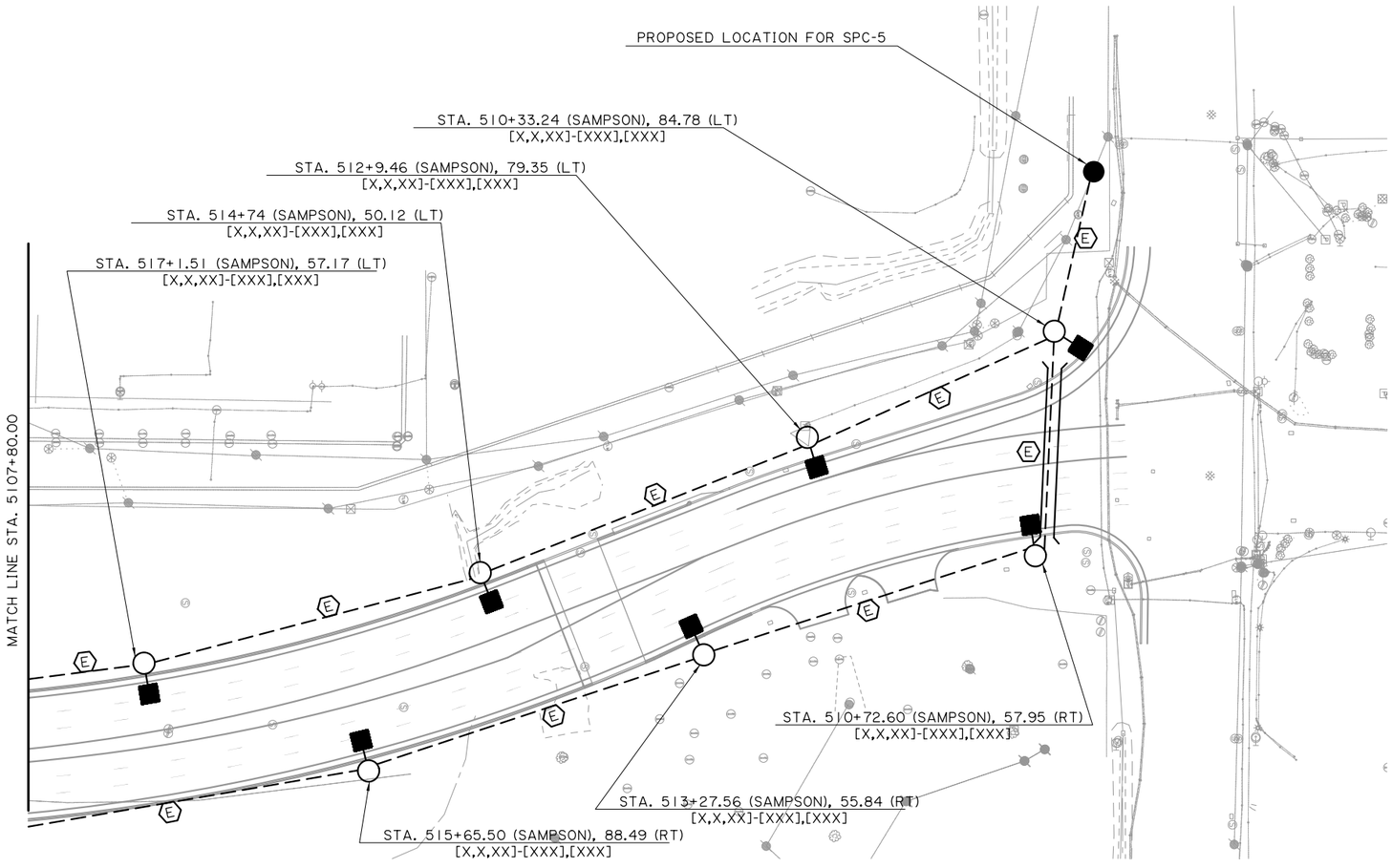

SECTION "O"

SPECIFIC NOTES:

1. THIS SHEET IS INTENDED ONLY AS A GENERAL OVERVIEW OF THE WORK REQUIRED. OMISSION FROM THIS SHEET OF ANY ITEM SHOWN ELSEWHERE IN THE PLANS DOES NOT RELIEVE THE CONTRACTOR FROM RESPONSIBILITY FOR ANY ASSOCIATED WORK.
2. LABELED CONDUIT RUNS SHOWN CROSSING ROADWAYS, DRIVEWAYS, ETC. SHALL BE INSTALLED IN PROTECTIVE HDPE CASING. SEE LAYOUT FOR LOCATIONS.
3. CONTRACTOR SHALL INSTALL ALL NEW ELECTRICAL WIRING, SPLICES, GROUNDING, AND APPURTENANCES, AS SPECIFIED BY THE ELECTRICAL DETAILS IN THESE PLANS AND MANUFACTURER'S SPECIFICATIONS.
4. REFER TO PLAN SHEET 128 FOR LIGHTING PLAN SECTIONS.
5. CONTRACTOR SHALL INSTALL (1) UNDERGROUND JUNCTION BOX "JB-2" IN ALL LOW MAST CONRETE MOWING APRONS.
6. REFER TO PLAN SHEETS 175-176 FOR CONSTRUCTION DETAILS OF LIGHT POLE FOUNDATION AND JUNCTION BOX INSTALLATION AT EACH MEDIAN BARRIER LOCATION.

✡ NUMBER(S) THAT ARE SHOWN IN PARENTHESES (###) CORRESPOND TO ELECTRICAL EQUIPMENT ITEMS LISTED ON PLAN SHEETS 177 - 181.

LABEL	CONDUIT WITH CONDUCTORS	PAY ITEM
(E)	CONDUIT WITH CONDUCTORS (PVC/HDPE) (1-1/2") (2 #10, 1 #10 STRANDED GROUND)	822-02-XXXXX

SHEET NUMBER 143

PARISH	CONTROL SECTION	STATE PROJECT
CALCASIEU	450-91	H.003931

DESIGN	CHECK	DETAIL	CHECK	REVIEW	SERIES #
E. CLAY	J. GERHART	E. CLAY	J. GERHART	C. LEDET	15 OF 26

TECHNICAL PROPOSAL

PRELIMINARY

FOR REVIEW ONLY

ENGINEER:
JONATHAN E. GERHART

LICENSE #:
43052

DATE:
4/19/2023

NO.	DATE	REVISION OR CHANGE ORDER DESCRIPTION	BY

LIGHTING PLAN - 15

STA. 5107+80.00 TO STA. 5100+00.00

I-10 CALCASIEU RIVER BRIDGE P3

LOUISIANA DEPARTMENT OF TRANSPORTATION & DEVELOPMENT

CBP CALCASIEU BRIDGE PARTNERS

E16_Lighting Plan - 15.dgn

TECHNICAL PROPOSAL

4/19/2023

LEGEND:

- LIGHT POLE, HIGHMAST, 327
- LUMINAIRE, HIGHMAST, 315
- UJB — UNDERGROUND JUNCTION BOX (UJB)
- DUCT (UNDERGROUND)
- LIGHT POLE, LOWMAST, 323
- LUMINAIRE, LOWMAST, 313
- BJB — BARRIER JUNCTION BOX (BJB)
- CASING, JACKED OR BORED
- LIGHT POLE, LOWMAST, 322
- LUMINAIRE, LOWMAST, 326
- DM — DUCT MARKER (CONCRETE)
- LUMINAIRE, LOWMAST, 311

N

Scale : 1" = 100'

POLE STATION LABEL:

POLE OFFSET FROM BASELINE (FEET)

STATION — STA. XXX+XX.XX (RAMP OR HIGHWAY), XX (RT./LT.)
[X,X,XX]-[XXX],[XXX]

POLE ID NO.
- SECONDARY POWER CONTROLLER
- CIRCUIT #
- POLE ID #
- LUMINAIRE (ITEM #)
- POLE (ITEM #)

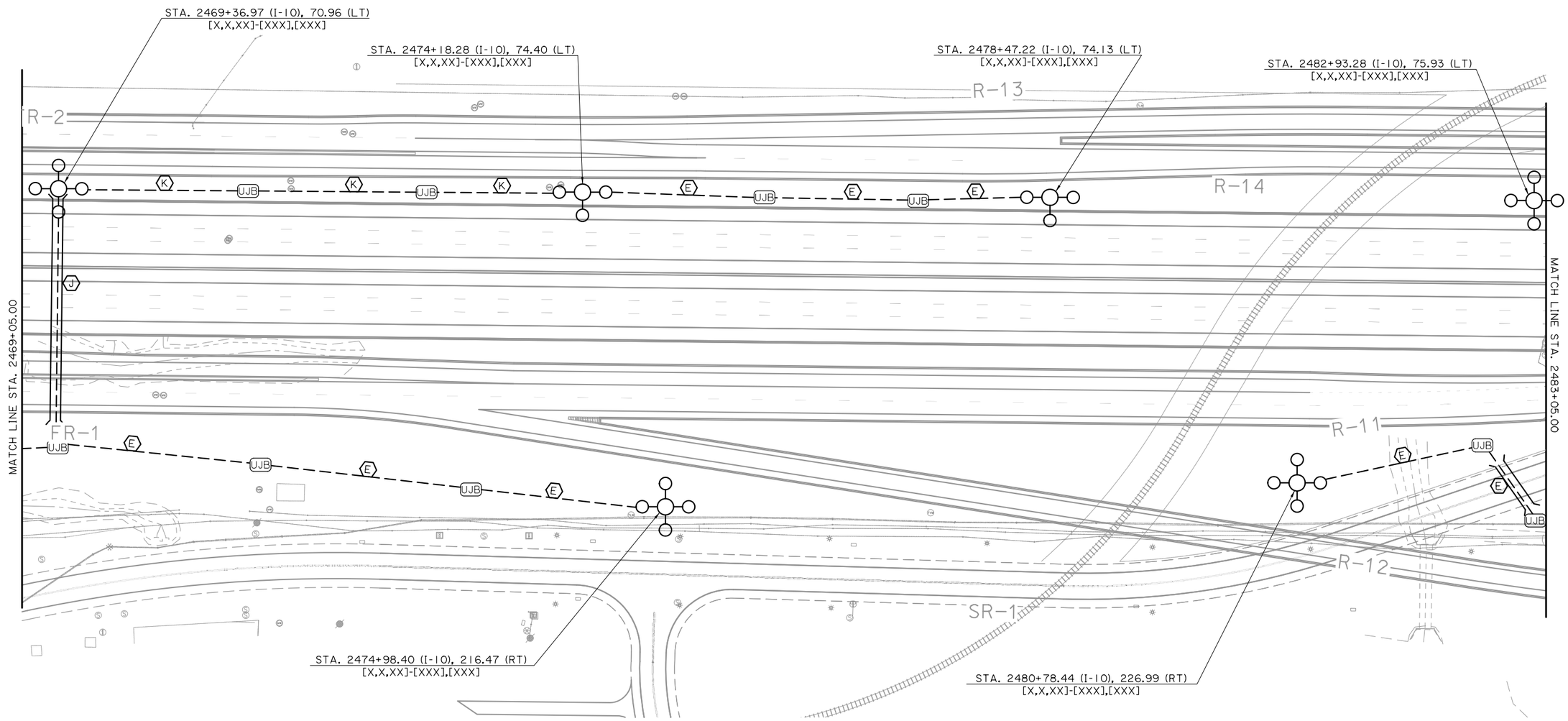

SECTION "P"

✡ NUMBER(S) THAT ARE SHOWN IN PARENTHESES (###) CORRESPOND TO ELECTRICAL EQUIPMENT ITEMS LISTED ON PLAN SHEETS 177 - 181.

SPECIFIC NOTES:

1. THIS SHEET IS INTENDED ONLY AS A GENERAL OVERVIEW OF THE WORK REQUIRED. OMISSION FROM THIS SHEET OF ANY ITEM SHOWN ELSEWHERE IN THE PLANS DOES NOT RELIEVE THE CONTRACTOR FROM RESPONSIBILITY FOR ANY ASSOCIATED WORK.
2. LABELED CONDUIT RUNS SHOWN CROSSING ROADWAYS, DRIVEWAYS, ETC. SHALL BE INSTALLED IN PROTECTIVE HDPE CASING. SEE LAYOUT FOR LOCATIONS.
3. CONTRACTOR SHALL INSTALL ALL NEW ELECTRICAL WIRING, SPLICES, GROUNDING, AND APPURTENANCES, AS SPECIFIED BY THE ELECTRICAL DETAILS IN THESE PLANS AND MANUFACTURER'S SPECIFICATIONS.
4. REFER TO PLAN SHEET 128 FOR LIGHTING PLAN SECTIONS.
5. CONTRACTOR SHALL INSTALL (1) UNDERGROUND JUNCTION BOX "JB-2" IN ALL LOW MAST CONRETE MOWING APRONS.
6. REFER TO PLAN SHEETS 175-176 FOR CONSTRUCTION DETAILS OF LIGHT POLE FOUNDATION AND JUNCTION BOX INSTALLATION AT EACH MEDIAN BARRIER LOCATION.

LABEL	CONDUIT WITH CONDUCTORS	PAY ITEM
(E)	CONDUIT WITH CONDUCTORS (PVC/HDPE) (1-1/2") (2 #10, 1 #10 STRANDED GROUND)	822-02-XXXXX
(J)	CONDUIT WITH CONDUCTORS (PVC/HDPE) (1") (2 #8, 2 #10, 1 #8 STRANDED GROUND)	822-02-XXXXX
(K)	CONDUIT WITH CONDUCTORS (PVC/HDPE) (1") (2 #10, 2 #10, 1 #10 STRANDED GROUND)	822-02-XXXXX

SHEET NUMBER	144
PARISH	CALCASIEU
CONTROL SECTION	450-91
STATE PROJECT	H.003931
DESIGN	E. CLAY
CHECK	J. GERHART
DETAIL	E. CLAY
CHECK	J. GERHART
REVIEW	C. LEDET
SERIES #	16 OF 26

TECHNICAL PROPOSAL
PRELIMINARY
FOR REVIEW ONLY
ENGINEER: JONATHAN E. GERHART
LICENSE #: 43052
DATE: 4/19/2023

NO.	DATE	REVISION OR CHANGE ORDER DESCRIPTION	BY

LIGHTING PLAN - 16
STA. 2469+05.00 TO STA. 2483+05.00

I-10 CALCASIEU RIVER BRIDGE P3

DOTD LOUISIANA DEPARTMENT OF TRANSPORTATION & DEVELOPMENT

CBP CALCASIEU BRIDGE PARTNERS

E17_Lighting Plan - 16.dgn

TECHNICAL PROPOSAL

4/19/2023

LEGEND:

- LIGHT POLE, HIGHMAST, 327
- LUMINAIRE, HIGHMAST, 315
- UJB — UNDERGROUND JUNCTION BOX (UJB)
- DUCT (UNDERGROUND)
- LIGHT POLE, LOWMAST, 323
- LUMINAIRE, LOWMAST, 313
- BJB — BARRIER JUNCTION BOX (BJB)
- CASING, JACKED OR BORED
- LIGHT POLE, LOWMAST, 322
- LUMINAIRE, LOWMAST, 326
- DM — DUCT MARKER (CONCRETE)
- LUMINAIRE, LOWMAST, 311

N

Scale : 1" = 100'

POLE STATION LABEL:

POLE OFFSET FROM BASELINE (FEET)
STATION — STA. XXX+XX.XX (RAMP OR HIGHWAY), XX (RT./LT.)
[X,X,XX]-[XXX],[XXX]
SECONDARY POWER CONTROLLER
POLE ID NO.
CIRCUIT #
POLE ID #
LUMINAIRE (ITEM #)
POLE (ITEM #)

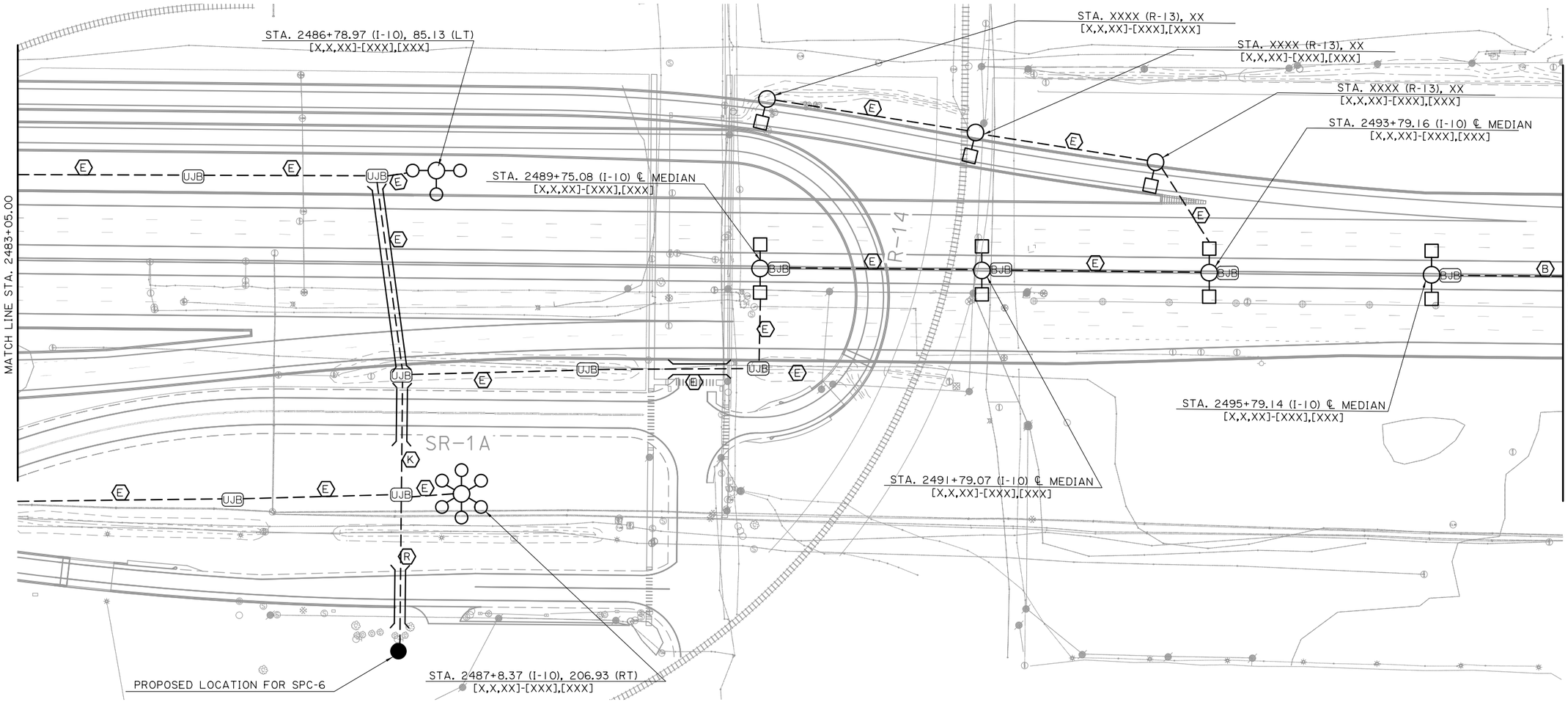

SECTION "Q"

SPECIFIC NOTES:

1. THIS SHEET IS INTENDED ONLY AS A GENERAL OVERVIEW OF THE WORK REQUIRED. OMISSION FROM THIS SHEET OF ANY ITEM SHOWN ELSEWHERE IN THE PLANS DOES NOT RELIEVE THE CONTRACTOR FROM RESPONSIBILITY FOR ANY ASSOCIATED WORK.
2. LABELED CONDUIT RUNS SHOWN CROSSING ROADWAYS, DRIVEWAYS, ETC. SHALL BE INSTALLED IN PROTECTIVE HDPE CASING. SEE LAYOUT FOR LOCATIONS.
3. CONTRACTOR SHALL INSTALL ALL NEW ELECTRICAL WIRING, SPLICES, GROUNDING, AND APPURTENANCES, AS SPECIFIED BY THE ELECTRICAL DETAILS IN THESE PLANS AND MANUFACTURER'S SPECIFICATIONS.
4. REFER TO PLAN SHEET 128 FOR LIGHTING PLAN SECTIONS.
5. CONTRACTOR SHALL INSTALL (1) UNDERGROUND JUNCTION BOX "JB-2" IN ALL LOW MAST CONRETE MOWING APRONS.
6. REFER TO PLAN SHEETS 175-176 FOR CONSTRUCTION DETAILS OF LIGHT POLE FOUNDATION AND JUNCTION BOX INSTALLATION AT EACH MEDIAN BARRIER LOCATION.

✡ NUMBER(S) THAT ARE SHOWN IN PARENTHESES (###) CORRESPOND TO ELECTRICAL EQUIPMENT ITEMS LISTED ON PLAN SHEETS 177 - 181.

LABEL	CONDUIT WITH CONDUCTORS	PAY ITEM
(E)	CONDUIT WITH CONDUCTORS (PVC/HDPE) (1-1/2") (2 #10, 1 #10 STRANDED GROUND)	822-02-XXXXX
(K)	CONDUIT WITH CONDUCTORS (PVC/HDPE) (1") (2 #10, 2 #10, 1 #10 STRANDED GROUND)	822-02-XXXXX
(R)	CONDUIT WITH CONDUCTORS (PVC/HDPE) (1-1/4") (2 #10, 2 #10, 2 #10, 2 #10, 1 #10 STRANDED GRD)	822-02-XXXXX
(B)	CONDUIT WITH CONDUCTORS (PVC/HDPE) (1-1/2") (2 #4, 1 #4 STRANDED GROUND)	822-02-XXXXX

SHEET NUMBER 145

PARISH	CONTROL SECTION	STATE PROJECT
CALCASIEU	450-91	H.003931

DESIGN	CHECK	DETAIL	CHECK	REVIEW	SERIES
E. CLAY	J. GERHART	E. CLAY	J. GERHART	C. LEDET	17 OF 26

TECHNICAL PROPOSAL
PRELIMINARY
FOR REVIEW ONLY
ENGINEER:
JONATHAN E. GERHART
LICENSE #:
43052
DATE:
4/19/2023

NO.	DATE	REVISION OR CHANGE ORDER DESCRIPTION	BY

LIGHTING PLAN - 17
STA. 2483+05.00 TO STA. 2496+98.00

I-10 CALCASIEU RIVER BRIDGE P3

DOTD LOUISIANA DEPARTMENT OF TRANSPORTATION & DEVELOPMENT

CBP CALCASIEU BRIDGE PARTNERS

B18_Lighting Plan - 17.dgn

4/19/2023

TECHNICAL PROPOSAL

LEGEND:

- LIGHT POLE, HIGHMAST, 327
- LUMINAIRE, HIGHMAST, 315
- UJB — UNDERGROUND JUNCTION BOX (UJB)
- DUCT (UNDERGROUND)
- LIGHT POLE, LOWMAST, 323
- LUMINAIRE, LOWMAST, 313
- BJB — BARRIER JUNCTION BOX (BJB)
- CASING, JACKED OR BORED
- LIGHT POLE, LOWMAST, 322
- LUMINAIRE, LOWMAST, 326
- DM — DUCT MARKER (CONCRETE)
- LUMINAIRE, LOWMAST, 311

N

Scale : 1" = 100'

POLE STATION LABEL:

POLE OFFSET FROM BASELINE (FEET)
STATION — STA. XXX+XX.XX (RAMP OR HIGHWAY), XX (RT./LT.)
[X,X,XX]-[XXX],[XXX]
SECONDARY POWER CONTROLLER
POLE ID NO.
CIRCUIT #
POLE ID #
LUMINAIRE (ITEM #)
POLE (ITEM #)

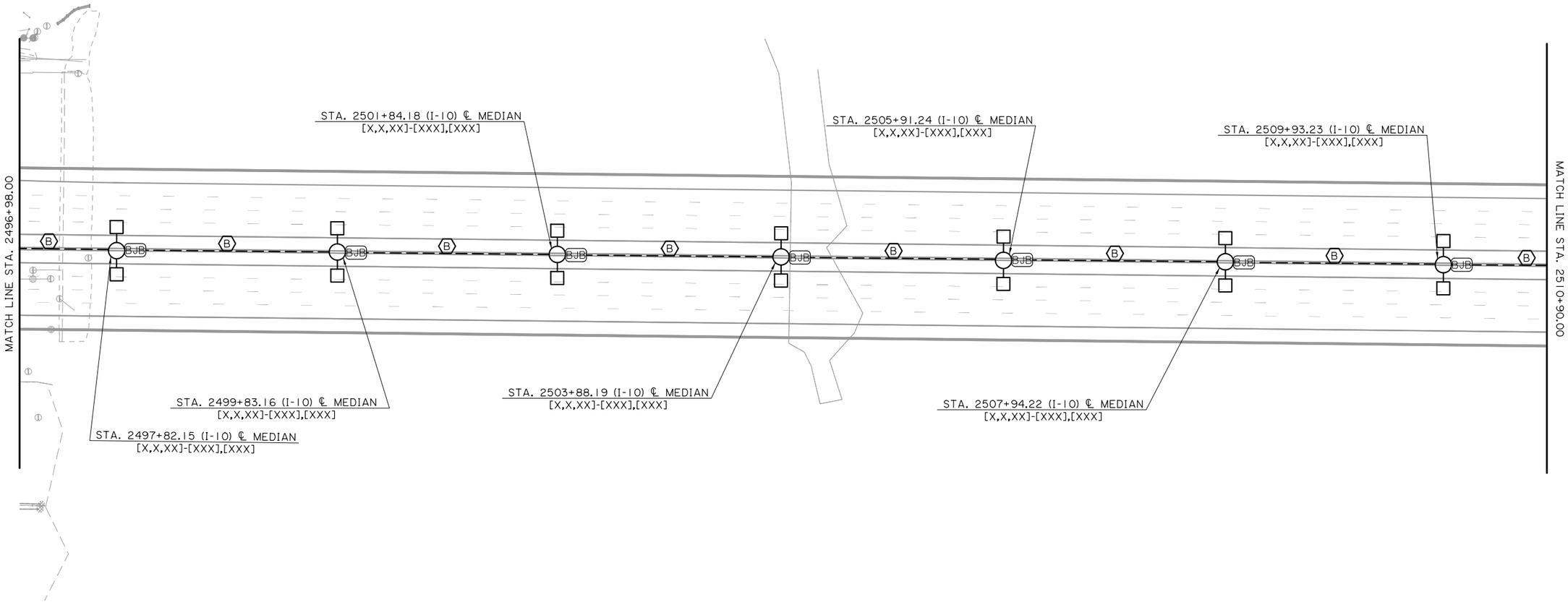

SECTION "R"

SPECIFIC NOTES:

1. THIS SHEET IS INTENDED ONLY AS A GENERAL OVERVIEW OF THE WORK REQUIRED. OMISSION FROM THIS SHEET OF ANY ITEM SHOWN ELSEWHERE IN THE PLANS DOES NOT RELIEVE THE CONTRACTOR FROM RESPONSIBILITY FOR ANY ASSOCIATED WORK.
2. LABELED CONDUIT RUNS SHOWN CROSSING ROADWAYS, DRIVEWAYS, ETC. SHALL BE INSTALLED IN PROTECTIVE HDPE CASING. SEE LAYOUT FOR LOCATIONS.
3. CONTRACTOR SHALL INSTALL ALL NEW ELECTRICAL WIRING, SPLICES, GROUNDING, AND APPURTENANCES, AS SPECIFIED BY THE ELECTRICAL DETAILS IN THESE PLANS AND MANUFACTURER'S SPECIFICATIONS.
4. REFER TO PLAN SHEET 128 FOR LIGHTING PLAN SECTIONS.
5. CONTRACTOR SHALL INSTALL (1) UNDERGROUND JUNCTION BOX "JB-2" IN ALL LOW MAST CONRETE MOWING APRONS.
6. REFER TO PLAN SHEETS 175-176 FOR CONSTRUCTION DETAILS OF LIGHT POLE FOUNDATION AND JUNCTION BOX INSTALLATION AT EACH MEDIAN BARRIER LOCATION.

✡ NUMBER(S) THAT ARE SHOWN IN PARENTHESES (###) CORRESPOND TO ELECTRICAL EQUIPMENT ITEMS LISTED ON PLAN SHEETS 177 - 181.

LABEL	CONDUIT WITH CONDUCTORS	PAY ITEM
(B)	CONDUIT WITH CONDUCTORS (PVC/HDPE) (1-1/2") (2 #4, 1 #4 STRANDED GROUND)	822-02-XXXXX

E19_Lighting Plan - 18.dgn

SHEET NUMBER 146

PARISH	CONTROL SECTION	STATE PROJECT
CALCASIEU	450-91	H.003931

DESIGN	CHECK	DETAIL	CHECK	REVIEW	SERIES
E. CLAY	J. GERHART	E. CLAY	J. GERHART	C. LEDET	18 OF 26

TECHNICAL PROPOSAL
PRELIMINARY
FOR REVIEW ONLY
ENGINEER:
JONATHAN E. GERHART
LICENSE #:
43052
DATE:
4/19/2023

NO.	DATE	REVISION OR CHANGE ORDER DESCRIPTION	BY

LIGHTING PLAN - 18
STA. 2496+98.00 TO STA. 2510+90.00

I-10 CALCASIEU RIVER BRIDGE P3

LOUISIANA DEPARTMENT OF TRANSPORTATION & DEVELOPMENT

CALCASIEU BRIDGE PARTNERS

TECHNICAL PROPOSAL

4/19/2023

LEGEND:

- LIGHT POLE, HIGHMAST, 327
- LUMINAIRE, HIGHMAST, 315
- UJB — UNDERGROUND JUNCTION BOX (UJB)
- DUCT (UNDERGROUND)
- LIGHT POLE, LOWMAST, 323
- LUMINAIRE, LOWMAST, 313
- BJB — BARRIER JUNCTION BOX (BJB)
- CASING, JACKED OR BORED
- LIGHT POLE, LOWMAST, 322
- LUMINAIRE, LOWMAST, 326
- DM — DUCT MARKER (CONCRETE)
- LUMINAIRE, LOWMAST, 311

N

Scale : 1" = 100'

POLE STATION LABEL:

POLE OFFSET FROM BASELINE (FEET)

STATION — STA. XXX+XX.XX (RAMP OR HIGHWAY), XX (RT./LT.)
[X,X,XX]-[XXX],[XXX]

POLE ID NO.
- SECONDARY POWER CONTROLLER
- CIRCUIT #
- POLE ID #
- LUMINAIRE (ITEM #)
- POLE (ITEM #)

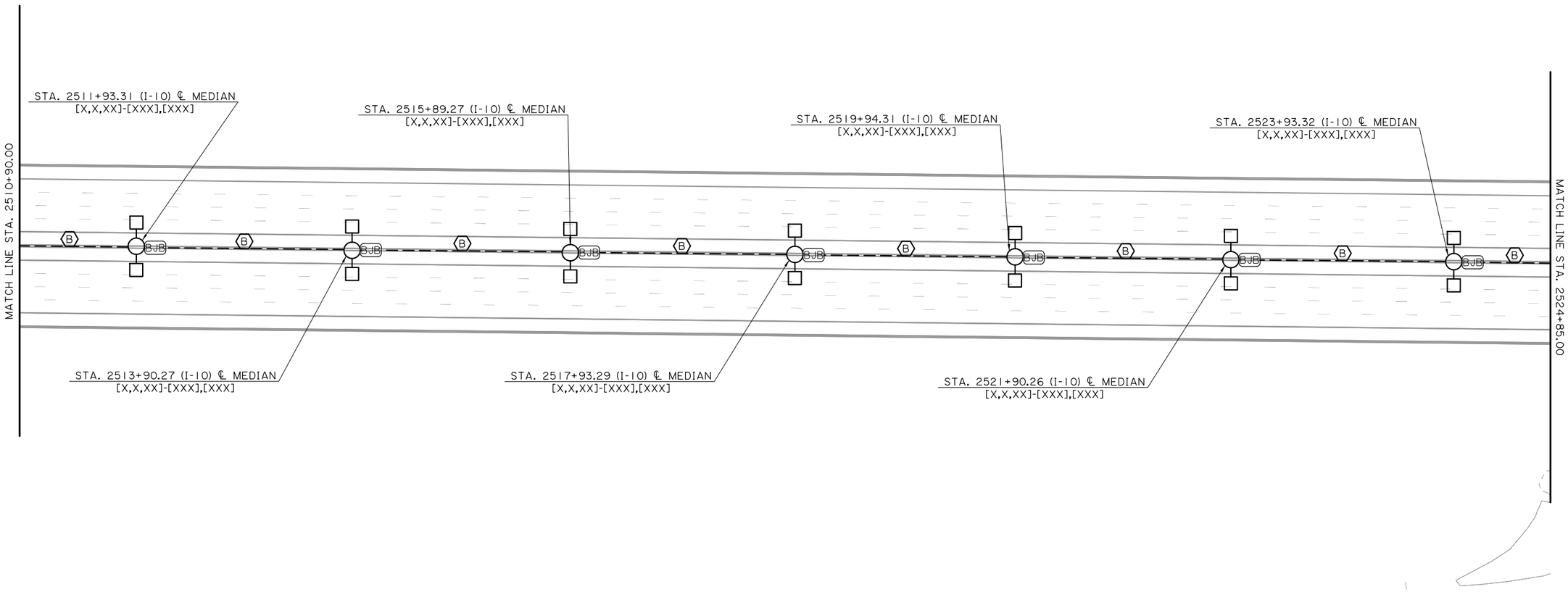

SECTION "S"

✡ NUMBER(S) THAT ARE SHOWN IN PARENTHESES (###) CORRESPOND TO ELECTRICAL EQUIPMENT ITEMS LISTED ON PLAN SHEETS 177 - 181.

LABEL	CONDUIT WITH CONDUCTORS	PAY ITEM
B	CONDUIT WITH CONDUCTORS (PVC/HDPE) (1-1/2") (2 #4, 1 #4 STRANDED GROUND)	822-02-XXXXX

SPECIFIC NOTES:

1. THIS SHEET IS INTENDED ONLY AS A GENERAL OVERVIEW OF THE WORK REQUIRED. OMISSION FROM THIS SHEET OF ANY ITEM SHOWN ELSEWHERE IN THE PLANS DOES NOT RELIEVE THE CONTRACTOR FROM RESPONSIBILITY FOR ANY ASSOCIATED WORK.
2. LABELED CONDUIT RUNS SHOWN CROSSING ROADWAYS, DRIVEWAYS, ETC. SHALL BE INSTALLED IN PROTECTIVE HDPE CASING. SEE LAYOUT FOR LOCATIONS.
3. CONTRACTOR SHALL INSTALL ALL NEW ELECTRICAL WIRING, SPLICES, GROUNDING, AND APPURTENANCES, AS SPECIFIED BY THE ELECTRICAL DETAILS IN THESE PLANS AND MANUFACTURER'S SPECIFICATIONS.
4. REFER TO PLAN SHEET 128 FOR LIGHTING PLAN SECTIONS.
5. CONTRACTOR SHALL INSTALL (1) UNDERGROUND JUNCTION BOX "JB-2" IN ALL LOW MAST CONRETE MOWING APRONS.
6. REFER TO PLAN SHEETS 175-176 FOR CONSTRUCTION DETAILS OF LIGHT POLE FOUNDATION AND JUNCTION BOX INSTALLATION AT EACH MEDIAN BARRIER LOCATION.

E20_Lighting Plan - 19.dgn

SHEET NUMBER 147

PARISH	CONTROL SECTION	STATE PROJECT
CALCASIEU	450-91	H.003931

DESIGN	CHECK	DETAIL	CHECK	REVIEW	SERIES
E. CLAY	J. GERHART	E. CLAY	J. GERHART	C. LEDET	19 OF 26

TECHNICAL PROPOSAL

PRELIMINARY

FOR REVIEW ONLY

ENGINEER:
JONATHAN E. GERHART

LICENSE #:
43052

DATE:
4/19/2023

NO.	DATE	REVISION OR CHANGE ORDER DESCRIPTION	BY

LIGHTING PLAN - 19

STA. 2510+90.00 TO STA. 2524+85.00

I-10 CALCASIEU RIVER BRIDGE P3

DOTD LOUISIANA DEPARTMENT OF TRANSPORTATION & DEVELOPMENT

CBP CALCASIEU BRIDGE PARTNERS

TECHNICAL PROPOSAL

4/19/2023

LEGEND:

- LIGHT POLE, HIGHMAST, 327
- LUMINAIRE, HIGHMAST, 315
- UJB — UNDERGROUND JUNCTION BOX (UJB)
- DUCT (UNDERGROUND)
- LIGHT POLE, LOWMAST, 323
- LUMINAIRE, LOWMAST, 313
- BJB — BARRIER JUNCTION BOX (BJB)
- CASING, JACKED OR BORED
- LIGHT POLE, LOWMAST, 322
- LUMINAIRE, LOWMAST, 326
- DM — DUCT MARKER (CONCRETE)
- LUMINAIRE, LOWMAST, 311

N

Scale : 1" = 100'

POLE STATION LABEL:

POLE OFFSET FROM BASELINE (FEET)

STATION — STA. XXX+XX.XX (RAMP OR HIGHWAY), XX (RT./LT.)
[X,X,XX]-[XXX],[XXX]

POLE ID NO.
- SECONDARY POWER CONTROLLER
- CIRCUIT #
- POLE ID #
- LUMINAIRE (ITEM #)
- POLE (ITEM #)

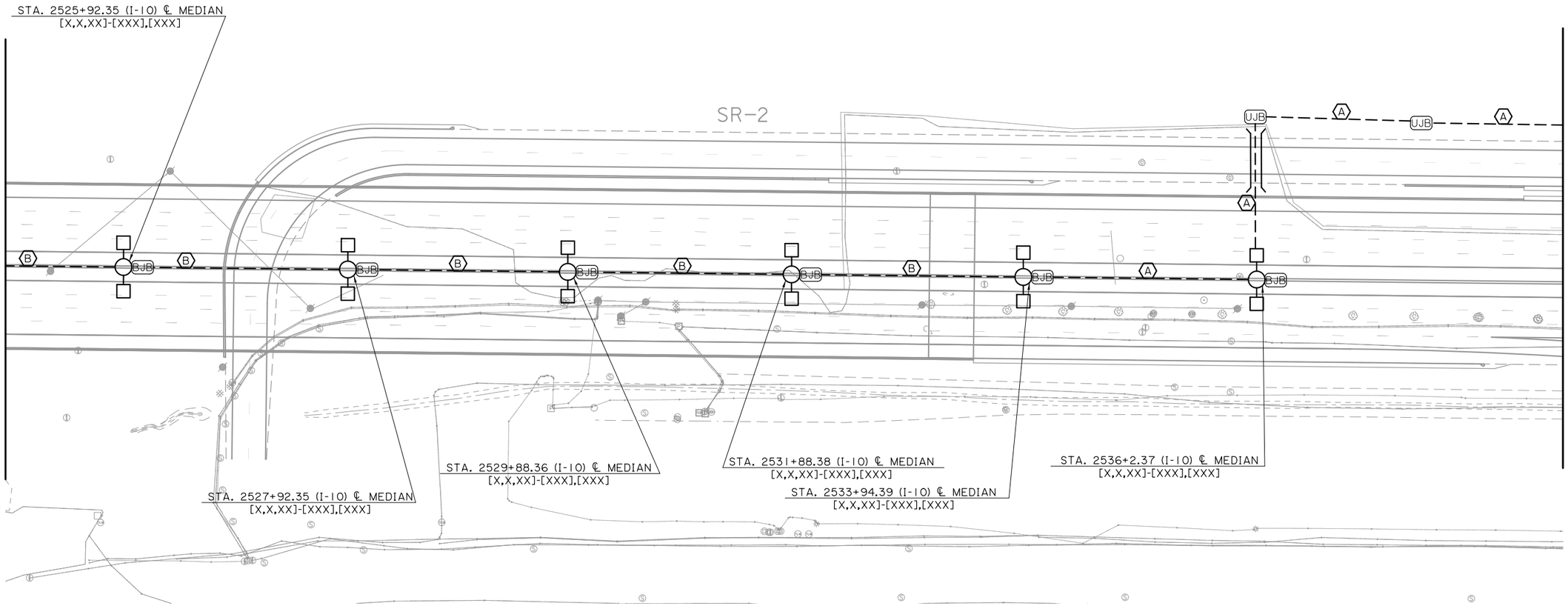

SECTION "T"

✡ NUMBER(S) THAT ARE SHOWN IN PARENTHESES (###) CORRESPOND TO ELECTRICAL EQUIPMENT ITEMS LISTED ON PLAN SHEETS 177 - 181.

LABEL	CONDUIT WITH CONDUCTORS	PAY ITEM
A	CONDUIT WITH CONDUCTORS (PVC/HDPE) (1-1/2") (2 #2, 1 #2 STRANDED GROUND)	822-02-XXXXX
B	CONDUIT WITH CONDUCTORS (PVC/HDPE) (1-1/2") (2 #4, 1 #4 STRANDED GROUND)	822-02-XXXXX

SPECIFIC NOTES:

1. THIS SHEET IS INTENDED ONLY AS A GENERAL OVERVIEW OF THE WORK REQUIRED. OMISSION FROM THIS SHEET OF ANY ITEM SHOWN ELSEWHERE IN THE PLANS DOES NOT RELIEVE THE CONTRACTOR FROM RESPONSIBILITY FOR ANY ASSOCIATED WORK.
2. LABELED CONDUIT RUNS SHOWN CROSSING ROADWAYS, DRIVEWAYS, ETC. SHALL BE INSTALLED IN PROTECTIVE HDPE CASING. SEE LAYOUT FOR LOCATIONS.
3. CONTRACTOR SHALL INSTALL ALL NEW ELECTRICAL WIRING, SPLICES, GROUNDING, AND APPURTENANCES, AS SPECIFIED BY THE ELECTRICAL DETAILS IN THESE PLANS AND MANUFACTURER'S SPECIFICATIONS.
4. REFER TO PLAN SHEET 128 FOR LIGHTING PLAN SECTIONS.
5. CONTRACTOR SHALL INSTALL (1) UNDERGROUND JUNCTION BOX "JB-2" IN ALL LOW MAST CONRETE MOWING APRONS.
6. REFER TO PLAN SHEETS 175-176 FOR CONSTRUCTION DETAILS OF LIGHT POLE FOUNDATION AND JUNCTION BOX INSTALLATION AT EACH MEDIAN BARRIER LOCATION.

E21_Lighting Plan - 20.dgn

SHEET NUMBER 148

PARISH	CONTROL SECTION	STATE PROJECT
CALCASIEU	450-91	H.003931

	DESIGN	CHECK	DETAIL	CHECK	REVIEW	SERIES #
	E. CLAY	J. GERHART	E. CLAY	J. GERHART	C. LEDET	20 OF 26

TECHNICAL PROPOSAL

PRELIMINARY

FOR REVIEW ONLY

ENGINEER: JONATHAN E. GERHART

LICENSE #: 43052

DATE: 4/19/2023

NO.	DATE	REVISION OR CHANGE ORDER DESCRIPTION	BY

LIGHTING PLAN - 20

STA. 2524+85.00 TO STA. 2538+75.00

I-10 CALCASIEU RIVER BRIDGE P3

LOUISIANA DEPARTMENT OF TRANSPORTATION & DEVELOPMENT

CALCASIEU BRIDGE PARTNERS

TECHNICAL PROPOSAL

4/19/2023

LEGEND:

- LIGHT POLE, HIGHMAST, 327
- LUMINAIRE, HIGHMAST, 315
- UJB — UNDERGROUND JUNCTION BOX (UJB)
- DUCT (UNDERGROUND)
- LIGHT POLE, LOWMAST, 323
- LUMINAIRE, LOWMAST, 313
- BJB — BARRIER JUNCTION BOX (BJB)
- CASING, JACKED OR BORED
- LIGHT POLE, LOWMAST, 322
- LUMINAIRE, LOWMAST, 326
- DM — DUCT MARKER (CONCRETE)
- LUMINAIRE, LOWMAST, 311

N

Scale : 1" = 100'

POLE STATION LABEL:

POLE OFFSET FROM BASELINE (FEET)

STATION — STA. XXX+XX.XX (RAMP OR HIGHWAY), XX (RT./LT.)
[X,X,XX]-[XXX],[XXX]

POLE ID NO.
- SECONDARY POWER CONTROLLER
- CIRCUIT #
- POLE ID #
- LUMINAIRE (ITEM #)
- POLE (ITEM #)

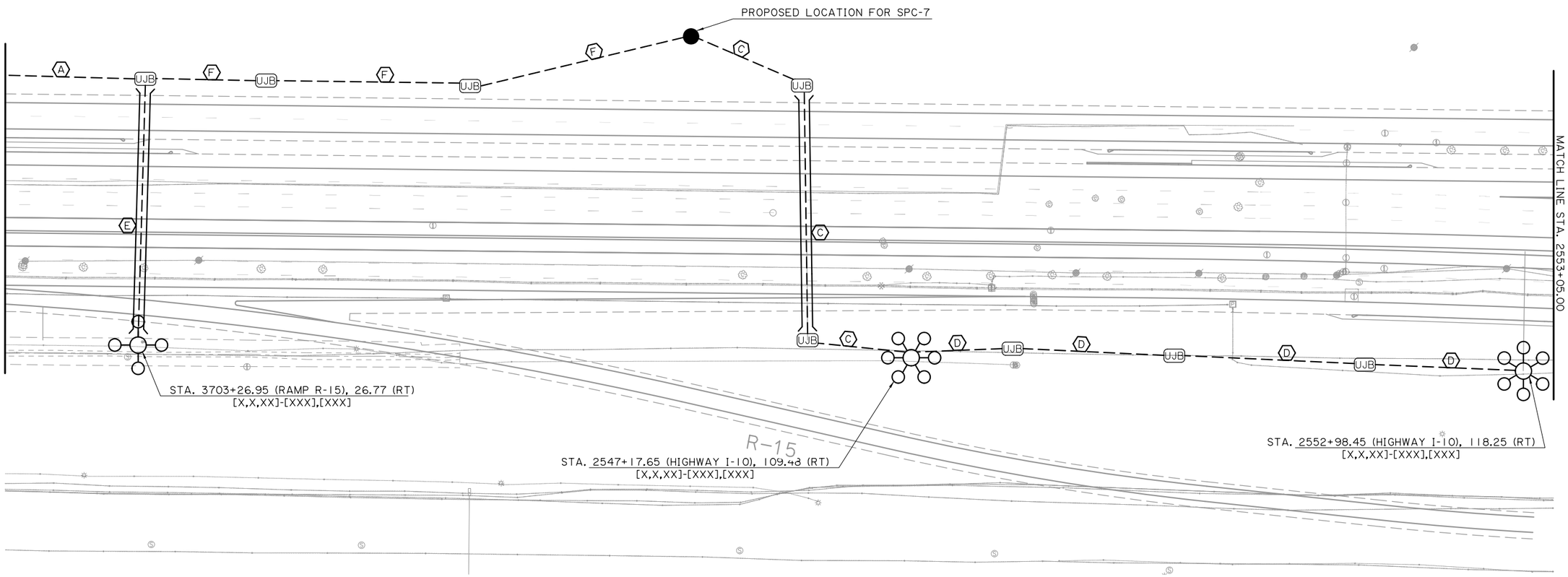

SECTION "U"

✡ NUMBER(S) THAT ARE SHOWN IN PARENTHESES (###) CORRESPOND TO ELECTRICAL EQUIPMENT ITEMS LISTED ON PLAN SHEETS 177 - 181.

SPECIFIC NOTES:

1. THIS SHEET IS INTENDED ONLY AS A GENERAL OVERVIEW OF THE WORK REQUIRED. OMISSION FROM THIS SHEET OF ANY ITEM SHOWN ELSEWHERE IN THE PLANS DOES NOT RELIEVE THE CONTRACTOR FROM RESPONSIBILITY FOR ANY ASSOCIATED WORK.
2. LABELED CONDUIT RUNS SHOWN CROSSING ROADWAYS, DRIVEWAYS, ETC. SHALL BE INSTALLED IN PROTECTIVE HDPE CASING. SEE LAYOUT FOR LOCATIONS.
3. CONTRACTOR SHALL INSTALL ALL NEW ELECTRICAL WIRING, SPLICES, GROUNDING, AND APPURTENANCES, AS SPECIFIED BY THE ELECTRICAL DETAILS IN THESE PLANS AND MANUFACTURER'S SPECIFICATIONS.
4. REFER TO PLAN SHEET 128 FOR LIGHTING PLAN SECTIONS.
5. CONTRACTOR SHALL INSTALL (1) UNDERGROUND JUNCTION BOX "JB-2" IN ALL LOW MAST CONRETE MOWING APRONS.
6. REFER TO PLAN SHEETS 175-176 FOR CONSTRUCTION DETAILS OF LIGHT POLE FOUNDATION AND JUNCTION BOX INSTALLATION AT EACH MEDIAN BARRIER LOCATION.

LABEL	CONDUIT WITH CONDUCTORS	PAY ITEM
A	CONDUIT WITH CONDUCTORS (PVC/HDPE) (1-1/2") (2 #2, 1 #2 STRANDED GROUND)	822-02-XXXXX
C	CONDUIT WITH CONDUCTORS (PVC/HDPE) (1-1/2") (2 #6, 1 #6 STRANDED GROUND)	822-02-XXXXX
D	CONDUIT WITH CONDUCTORS (PVC/HDPE) (1-1/2") (2 #8, 1 #8 STRANDED GROUND)	822-02-XXXXX
E	CONDUIT WITH CONDUCTORS (PVC/HDPE) (1-1/2") (2 #10, 1 #10 STRANDED GROUND)	822-02-XXXXX
F	CONDUIT WITH CONDUCTORS (PVC/HDPE) (2") (2 #2, 2 #10, 1 #2 STRANDED GROUND)	822-02-XXXXX

SHEET NUMBER 149

PARISH	CONTROL SECTION	STATE PROJECT
CALCASIEU	450-91	H.003931

	DESIGN	CHECK	DETAIL	CHECK	REVIEW	SERIES
	E. CLAY	J. GERHART	E. CLAY	J. GERHART	C. LEDET	21 OF 26

TECHNICAL PROPOSAL

PRELIMINARY

FOR REVIEW ONLY

ENGINEER: JONATHAN E. GERHART

LICENSE #: 43052

DATE: 4/19/2023

NO.	DATE	REVISION OR CHANGE ORDER DESCRIPTION	BY

LIGHTING PLAN - 21

STA. 2538+75.00 TO STA. 2553+05.00

I-10 CALCASIEU RIVER BRIDGE P3

LOUISIANA DEPARTMENT OF TRANSPORTATION & DEVELOPMENT

CALCASIEU BRIDGE PARTNERS

E22_Lighting Plan - 21.dgn

4/19/2023

TECHNICAL PROPOSAL

LEGEND:

- LIGHT POLE, HIGHMAST, 327
- LUMINAIRE, HIGHMAST, 315
- UJB — UNDERGROUND JUNCTION BOX (UJB)
- DUCT (UNDERGROUND)
- LIGHT POLE, LOWMAST, 323
- LUMINAIRE, LOWMAST, 313
- BJB — BARRIER JUNCTION BOX (BJB)
- CASING, JACKED OR BORED
- LIGHT POLE, LOWMAST, 322
- LUMINAIRE, LOWMAST, 326
- DM — DUCT MARKER (CONCRETE)
- LUMINAIRE, LOWMAST, 311

N

Scale : 1" = 100'

POLE STATION LABEL:

POLE OFFSET FROM BASELINE (FEET)

STATION — STA. XXX+XX.XX (RAMP OR HIGHWAY), XX (RT./LT.)
[X,X,XX]-[XXX],[XXX]

POLE ID NO. { SECONDARY POWER CONTROLLER / CIRCUIT # / POLE ID #

LUMINAIRE (ITEM #)

POLE (ITEM #)

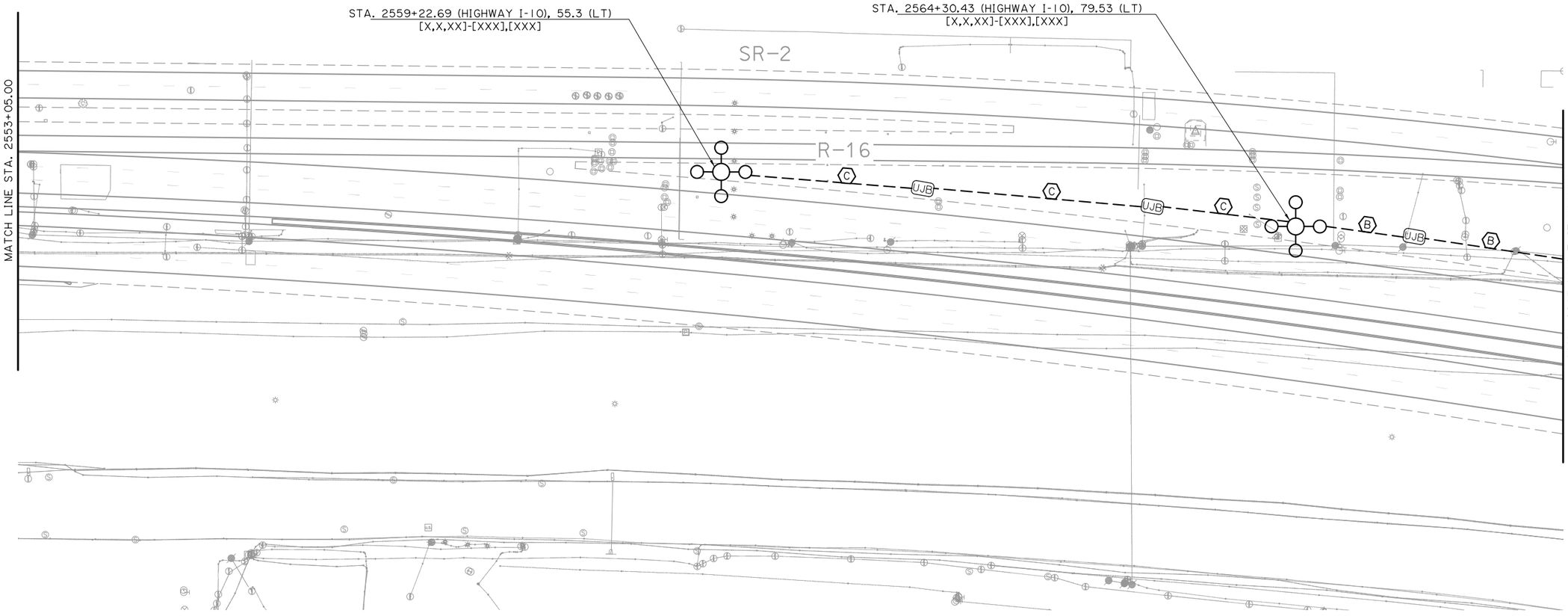

SECTION "V"

SPECIFIC NOTES:

1. THIS SHEET IS INTENDED ONLY AS A GENERAL OVERVIEW OF THE WORK REQUIRED. OMISSION FROM THIS SHEET OF ANY ITEM SHOWN ELSEWHERE IN THE PLANS DOES NOT RELIEVE THE CONTRACTOR FROM RESPONSIBILITY FOR ANY ASSOCIATED WORK.
2. LABELED CONDUIT RUNS SHOWN CROSSING ROADWAYS, DRIVEWAYS, ETC. SHALL BE INSTALLED IN PROTECTIVE HDPE CASING. SEE LAYOUT FOR LOCATIONS.
3. CONTRACTOR SHALL INSTALL ALL NEW ELECTRICAL WIRING, SPLICES, GROUNDING, AND APPURTENANCES, AS SPECIFIED BY THE ELECTRICAL DETAILS IN THESE PLANS AND MANUFACTURER'S SPECIFICATIONS.
4. REFER TO PLAN SHEET 128 FOR LIGHTING PLAN SECTIONS.
5. CONTRACTOR SHALL INSTALL (1) UNDERGROUND JUNCTION BOX "JB-2" IN ALL LOW MAST CONRETE MOWING APRONS.
6. REFER TO PLAN SHEETS 175-176 FOR CONSTRUCTION DETAILS OF LIGHT POLE FOUNDATION AND JUNCTION BOX INSTALLATION AT EACH MEDIAN BARRIER LOCATION.

✡ NUMBER(S) THAT ARE SHOWN IN PARENTHESES (###) CORRESPOND TO ELECTRICAL EQUIPMENT ITEMS LISTED ON PLAN SHEETS 177 - 181.

LABEL	CONDUIT WITH CONDUCTORS	PAY ITEM
B	CONDUIT WITH CONDUCTORS (PVC/HDPE) (1-1/2") (2 #4, 1 #4 STRANDED GROUND)	822-02-XXXXX
C	CONDUIT WITH CONDUCTORS (PVC/HDPE) (1-1/2") (2 #6, 1 #6 STRANDED GROUND)	822-02-XXXXX

SHEET NUMBER 150

PARISH	CONTROL SECTION	STATE PROJECT
CALCASIEU	450-91	H.003931

DESIGN	CHECK	DETAIL	CHECK	REVIEW	SERIES
E. CLAY	J. GERHART	E. CLAY	J. GERHART	C. LEDET	22 OF 26

TECHNICAL PROPOSAL
PRELIMINARY
FOR REVIEW ONLY
ENGINEER:
JONATHAN E. GERHART
LICENSE #:
43052
DATE:
4/19/2023

NO.	DATE	REVISION OR CHANGE ORDER DESCRIPTION	BY

LIGHTING PLAN - 22
STA. 2553+05.00 TO STA. 2566+75.00

I-10 CALCASIEU RIVER BRIDGE P3

DOTD LOUISIANA DEPARTMENT OF TRANSPORTATION & DEVELOPMENT

CBP CALCASIEU BRIDGE PARTNERS

E23_Lighting Plan - 22.dgn

TECHNICAL PROPOSAL

4/19/2023

LEGEND:

- LIGHT POLE, HIGHMAST, 327
- LUMINAIRE, HIGHMAST, 315
- UJB — UNDERGROUND JUNCTION BOX (UJB)
- DUCT (UNDERGROUND)
- LIGHT POLE, LOWMAST, 323
- LUMINAIRE, LOWMAST, 313
- BJB — BARRIER JUNCTION BOX (BJB)
- CASING, JACKED OR BORED
- LIGHT POLE, LOWMAST, 322
- LUMINAIRE, LOWMAST, 326
- DM — DUCT MARKER (CONCRETE)
- LUMINAIRE, LOWMAST, 311

N — Scale: 1" = 100'

POLE STATION LABEL:

POLE OFFSET FROM BASELINE (FEET)
STATION — STA. XXX+XX.XX (RAMP OR HIGHWAY), XX (RT./LT.)
[X,X,XX]-[XXX],[XXX]
POLE ID NO. { SECONDARY POWER CONTROLLER, CIRCUIT #, POLE ID # }
LUMINAIRE (ITEM #)
POLE (ITEM #)

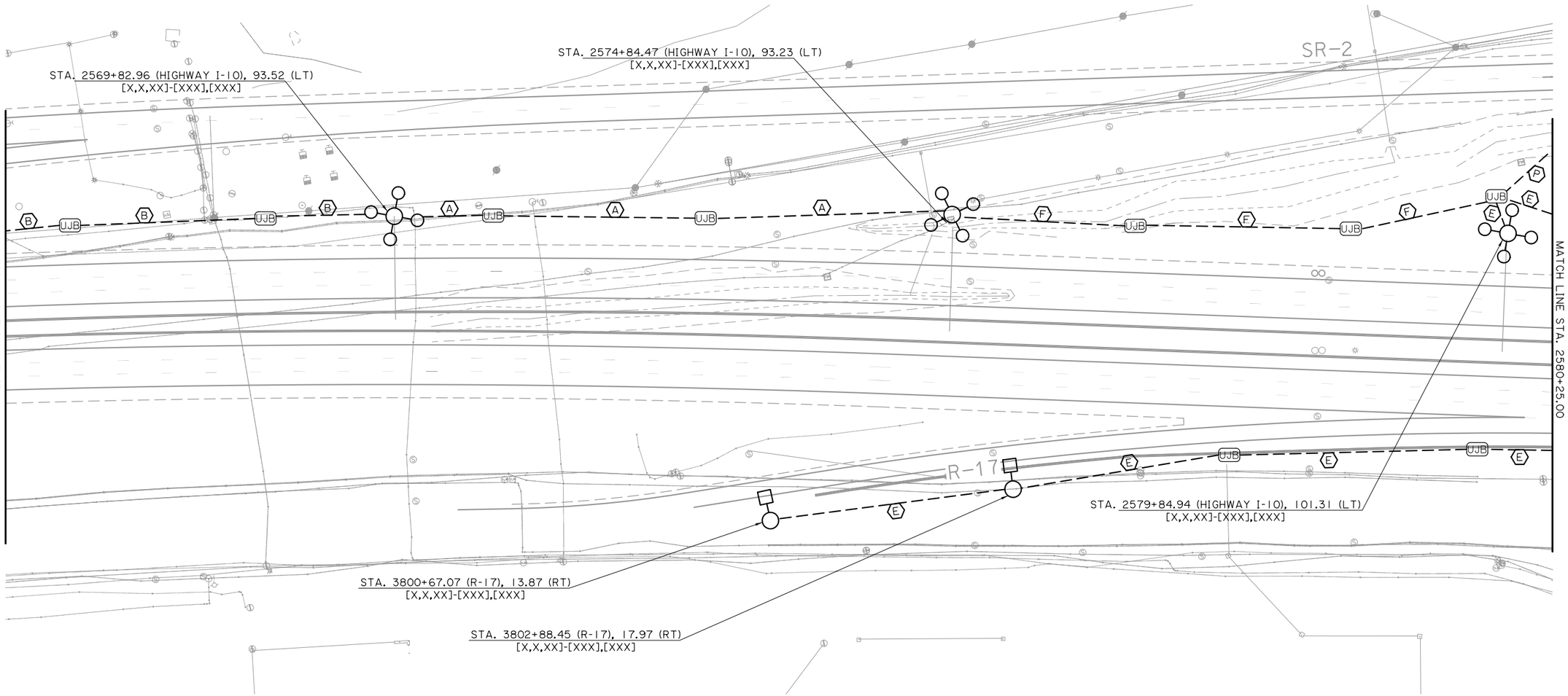

SECTION "W"

✡ NUMBER(S) THAT ARE SHOWN IN PARENTHESES (###) CORRESPOND TO ELECTRICAL EQUIPMENT ITEMS LISTED ON PLAN SHEETS 177 - 181.

SPECIFIC NOTES:

1. THIS SHEET IS INTENDED ONLY AS A GENERAL OVERVIEW OF THE WORK REQUIRED. OMISSION FROM THIS SHEET OF ANY ITEM SHOWN ELSEWHERE IN THE PLANS DOES NOT RELIEVE THE CONTRACTOR FROM RESPONSIBILITY FOR ANY ASSOCIATED WORK.
2. LABELED CONDUIT RUNS SHOWN CROSSING ROADWAYS, DRIVEWAYS, ETC. SHALL BE INSTALLED IN PROTECTIVE HDPE CASING. SEE LAYOUT FOR LOCATIONS.
3. CONTRACTOR SHALL INSTALL ALL NEW ELECTRICAL WIRING, SPLICES, GROUNDING, AND APPURTENANCES, AS SPECIFIED BY THE ELECTRICAL DETAILS IN THESE PLANS AND MANUFACTURER'S SPECIFICATIONS.
4. REFER TO PLAN SHEET 128 FOR LIGHTING PLAN SECTIONS.
5. CONTRACTOR SHALL INSTALL (1) UNDERGROUND JUNCTION BOX "JB-2" IN ALL LOW MAST CONRETE MOWING APRONS.
6. REFER TO PLAN SHEETS 175-176 FOR CONSTRUCTION DETAILS OF LIGHT POLE FOUNDATION AND JUNCTION BOX INSTALLATION AT EACH MEDIAN BARRIER LOCATION.

LABEL	CONDUIT WITH CONDUCTORS	PAY ITEM
A	CONDUIT WITH CONDUCTORS (PVC/HDPE) (1-1/2") (2 #2, 1 #2 STRANDED GROUND)	822-02-XXXXX
B	CONDUIT WITH CONDUCTORS (PVC/HDPE) (1-1/2") (2 #4, 1 #4 STRANDED GROUND)	822-02-XXXXX
E	CONDUIT WITH CONDUCTORS (PVC/HDPE) (1-1/2") (2 #10, 1 #10 STRANDED GROUND)	822-02-XXXXX
F	CONDUIT WITH CONDUCTORS (PVC/HDPE) (2") (2 #2, 2 #10, 1 #2 STRANDED GROUND)	822-02-XXXXX
P	CONDUIT WITH CONDUCTORS (PVC/HDPE) (2-1/2") (2 #2, 2 #10, 2 #10, 1 #2 STRANDED GROUND)	822-02-XXXXX

SHEET NUMBER 151

PARISH	CONTROL SECTION	STATE PROJECT
CALCASIEU	450-91	H.003931

DESIGN	DETAIL	REVIEW	SERIES
E. CLAY	E. CLAY	C. LEDET	23 OF 26
CHECK J. GERHART	CHECK J. GERHART		

TECHNICAL PROPOSAL
PRELIMINARY
FOR REVIEW ONLY
ENGINEER:
JONATHAN E. GERHART
LICENSE #:
43052
DATE:
4/19/2023

NO.	DATE	REVISION OR CHANGE ORDER DESCRIPTION	BY

LIGHTING PLAN - 23
STA. 2566+75.00 TO STA. 2580+25.00

I-10 CALCASIEU RIVER BRIDGE P3

DOTD LOUISIANA DEPARTMENT OF TRANSPORTATION & DEVELOPMENT
CBP CALCASIEU BRIDGE PARTNERS

E24_Lighting Plan - 23.dgn

TECHNICAL PROPOSAL

4/19/2023

LEGEND:

- LIGHT POLE, HIGHMAST, 327
- LUMINAIRE, HIGHMAST, 315
- UJB — UNDERGROUND JUNCTION BOX (UJB)
- DUCT (UNDERGROUND)
- LIGHT POLE, LOWMAST, 323
- LUMINAIRE, LOWMAST, 313
- BJB — BARRIER JUNCTION BOX (BJB)
- CASING, JACKED OR BORED
- LIGHT POLE, LOWMAST, 322
- LUMINAIRE, LOWMAST, 326
- DM — DUCT MARKER (CONCRETE)
- LUMINAIRE, LOWMAST, 311

N — 100 = 1" Scale :

POLE STATION LABEL:

POLE OFFSET FROM BASELINE (FEET)
STATION — STA. XXX+XX.XX (RAMP OR HIGHWAY), XX (RT./LT.)
[X,X,XX]-[XXX],[XXX]
POLE ID NO. { SECONDARY POWER CONTROLLER, CIRCUIT #, POLE ID #
LUMINAIRE (ITEM #)
POLE (ITEM #)

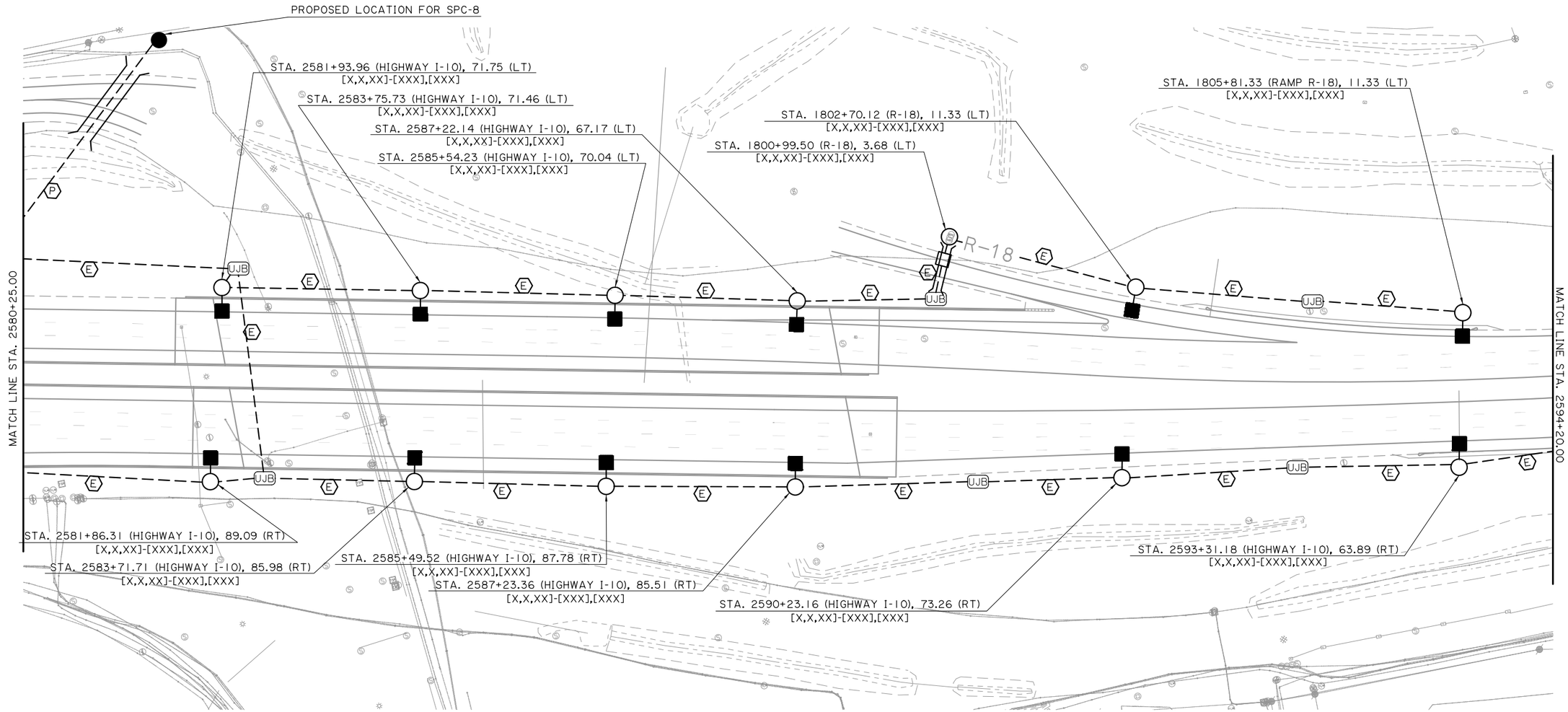

SECTION "X"

✡ NUMBER(S) THAT ARE SHOWN IN PARENTHESES (###) CORRESPOND TO ELECTRICAL EQUIPMENT ITEMS LISTED ON PLAN SHEETS 177 - 181.

SPECIFIC NOTES:

1. THIS SHEET IS INTENDED ONLY AS A GENERAL OVERVIEW OF THE WORK REQUIRED. OMISSION FROM THIS SHEET OF ANY ITEM SHOWN ELSEWHERE IN THE PLANS DOES NOT RELIEVE THE CONTRACTOR FROM RESPONSIBILITY FOR ANY ASSOCIATED WORK.
2. LABELED CONDUIT RUNS SHOWN CROSSING ROADWAYS, DRIVEWAYS, ETC. SHALL BE INSTALLED IN PROTECTIVE HDPE CASING. SEE LAYOUT FOR LOCATIONS.
3. CONTRACTOR SHALL INSTALL ALL NEW ELECTRICAL WIRING, SPLICES, GROUNDING, AND APPURTENANCES, AS SPECIFIED BY THE ELECTRICAL DETAILS IN THESE PLANS AND MANUFACTURER'S SPECIFICATIONS.
4. REFER TO PLAN SHEET 128 FOR LIGHTING PLAN SECTIONS.
5. CONTRACTOR SHALL INSTALL (1) UNDERGROUND JUNCTION BOX "JB-2" IN ALL LOW MAST CONRETE MOWING APRONS.
6. REFER TO PLAN SHEETS 175-176 FOR CONSTRUCTION DETAILS OF LIGHT POLE FOUNDATION AND JUNCTION BOX INSTALLATION AT EACH MEDIAN BARRIER LOCATION.

LABEL	CONDUIT WITH CONDUCTORS	PAY ITEM
(E)	CONDUIT WITH CONDUCTORS (PVC/HDPE) (1-1/2") (2 #10, 1 #10 STRANDED GROUND)	822-02-XXXXX
(P)	CONDUIT WITH CONDUCTORS (PVC/HDPE) (2-1/2") (2 #2, 2 #10, 2 #10, 1 #2 STRANDED GROUND)	822-02-XXXXX

SHEET NUMBER	152
PARISH	CALCASIEU
CONTROL SECTION	450-91
STATE PROJECT	H.003931
DESIGN	E. CLAY
CHECK	J. GERHART
DETAIL	E. CLAY
CHECK	J. GERHART
REVIEW	C. LEDET
SERIES	24 OF 26

TECHNICAL PROPOSAL
PRELIMINARY
FOR REVIEW ONLY
ENGINEER: JONATHAN E. GERHART
LICENSE #: 43052
DATE: 4/19/2023

NO.	DATE	REVISION OR CHANGE ORDER DESCRIPTION	BY

LIGHTING PLAN - 24
STA. 2580+25.00 TO STA. 2594+20.00

I-10 CALCASIEU RIVER BRIDGE P3

DOTD LOUISIANA DEPARTMENT OF TRANSPORTATION & DEVELOPMENT

CBP CALCASIEU BRIDGE PARTNERS

E25_Lighting Plan - 24.dgn

TECHNICAL PROPOSAL

4/19/2023

LEGEND:

- LIGHT POLE, HIGHMAST, 327
- LUMINAIRE, HIGHMAST, 315
- UJB — UNDERGROUND JUNCTION BOX (UJB)
- DUCT (UNDERGROUND)
- LIGHT POLE, LOWMAST, 323
- LUMINAIRE, LOWMAST, 313
- BJB — BARRIER JUNCTION BOX (BJB)
- CASING, JACKED OR BORED
- LIGHT POLE, LOWMAST, 322
- LUMINAIRE, LOWMAST, 326
- DM — DUCT MARKER (CONCRETE)
- LUMINAIRE, LOWMAST, 311

N

Scale : 1" = 100'

POLE STATION LABEL:

POLE OFFSET FROM BASELINE (FEET)
STATION — STA. XXX+XX.XX (RAMP OR HIGHWAY), XX (RT./LT.)
[X,X,XX]-[XXX],[XXX]
SECONDARY POWER CONTROLLER
POLE ID NO.
CIRCUIT #
POLE ID #
LUMINAIRE (ITEM #)
POLE (ITEM #)

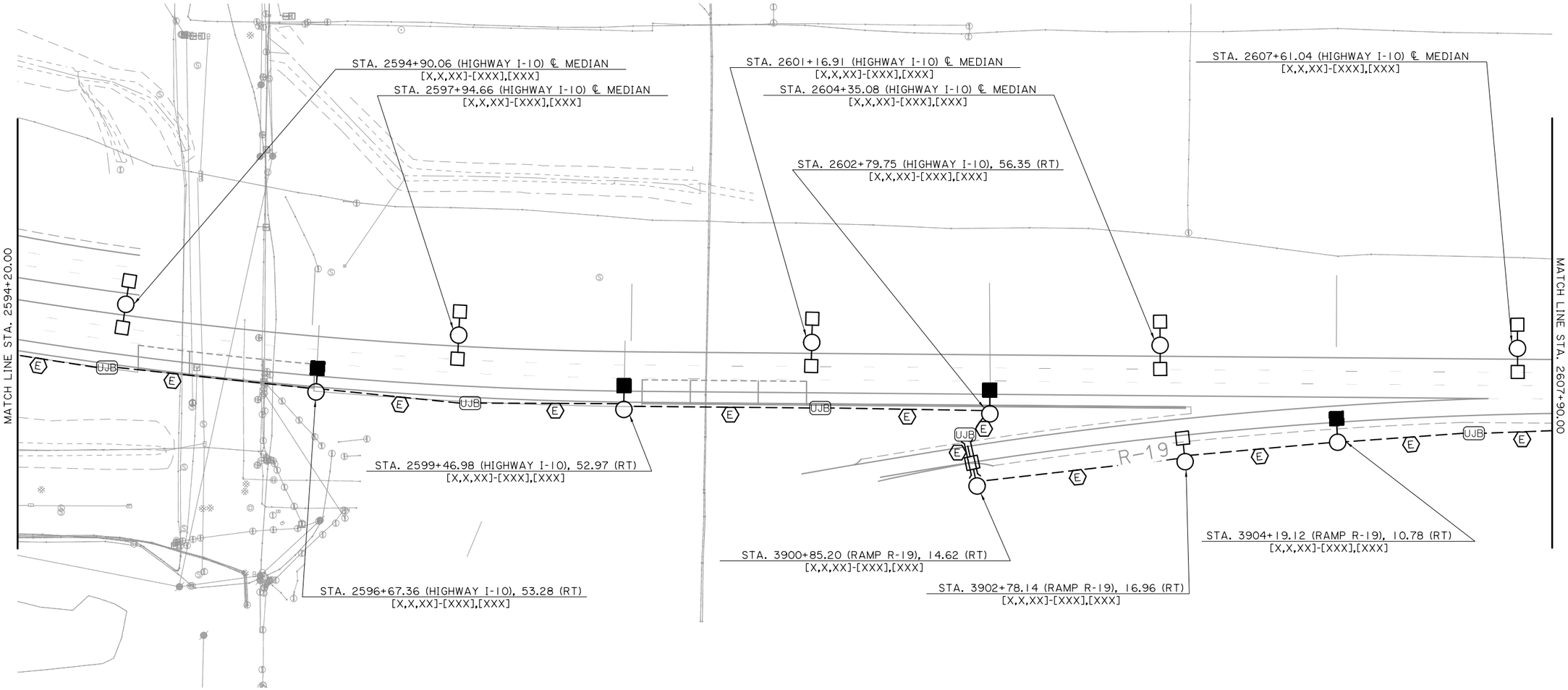

SECTION "Y"

SPECIFIC NOTES:

1. THIS SHEET IS INTENDED ONLY AS A GENERAL OVERVIEW OF THE WORK REQUIRED. OMISSION FROM THIS SHEET OF ANY ITEM SHOWN ELSEWHERE IN THE PLANS DOES NOT RELIEVE THE CONTRACTOR FROM RESPONSIBILITY FOR ANY ASSOCIATED WORK.
2. LABELED CONDUIT RUNS SHOWN CROSSING ROADWAYS, DRIVEWAYS, ETC. SHALL BE INSTALLED IN PROTECTIVE HDPE CASING. SEE LAYOUT FOR LOCATIONS.
3. CONTRACTOR SHALL INSTALL ALL NEW ELECTRICAL WIRING, SPLICES, GROUNDING, AND APPURTENANCES, AS SPECIFIED BY THE ELECTRICAL DETAILS IN THESE PLANS AND MANUFACTURER'S SPECIFICATIONS.
4. REFER TO PLAN SHEET 128 FOR LIGHTING PLAN SECTIONS.
5. CONTRACTOR SHALL INSTALL (1) UNDERGROUND JUNCTION BOX "JB-2" IN ALL LOW MAST CONRETE MOWING APRONS.
6. REFER TO PLAN SHEETS 175-176 FOR CONSTRUCTION DETAILS OF LIGHT POLE FOUNDATION AND JUNCTION BOX INSTALLATION AT EACH MEDIAN BARRIER LOCATION.

✡ NUMBER(S) THAT ARE SHOWN IN PARENTHESES (###) CORRESPOND TO ELECTRICAL EQUIPMENT ITEMS LISTED ON PLAN SHEETS 177 - 181.

LABEL	CONDUIT WITH CONDUCTORS	PAY ITEM
(E)	CONDUIT WITH CONDUCTORS (PVC/HDPE) (1-1/2") (2 #10, 1 #10 STRANDED GROUND)	822-02-XXXXX

SHEET NUMBER	153
PARISH	CALCASIEU
CONTROL SECTION	450-91
STATE PROJECT	H.003931

DESIGN	E. CLAY
CHECK	J. GERHART
DETAIL	E. CLAY
CHECK	J. GERHART
REVIEW	C. LEDET
SERIES #	25 OF 26

TECHNICAL PROPOSAL

PRELIMINARY

FOR REVIEW ONLY

ENGINEER: JONATHAN E. GERHART

LICENSE #: 43052

DATE: 4/19/2023

NO.	DATE	REVISION OR CHANGE ORDER DESCRIPTION	BY

LIGHTING PLAN - 25

STA. 2594+20.00 TO STA. 2607+90.00

I-10 CALCASIEU RIVER BRIDGE P3

LOUISIANA DEPARTMENT OF TRANSPORTATION & DEVELOPMENT

CALCASIEU BRIDGE PARTNERS

E26_Lighting Plan - 25.dgn

TECHNICAL PROPOSAL

4/19/2023

LEGEND:

- LIGHT POLE, HIGHMAST, 327
- LUMINAIRE, HIGHMAST, 315
- UJB — UNDERGROUND JUNCTION BOX (UJB)
- DUCT (UNDERGROUND)
- LIGHT POLE, LOWMAST, 323
- LUMINAIRE, LOWMAST, 313
- BJB — BARRIER JUNCTION BOX (BJB)
- CASING, JACKED OR BORED
- LIGHT POLE, LOWMAST, 322
- LUMINAIRE, LOWMAST, 326
- DM — DUCT MARKER (CONCRETE)
- LUMINAIRE, LOWMAST, 311

N

Scale : 1" = 100'

POLE STATION LABEL:

POLE OFFSET FROM BASELINE (FEET)
STATION — STA. XXX+XX.XX (RAMP OR HIGHWAY), XX (RT./LT.)
[X,X,XX]-[XXX],[XXX]
SECONDARY POWER CONTROLLER
POLE ID NO.
CIRCUIT #
POLE ID #
LUMINAIRE (ITEM #)
POLE (ITEM #)

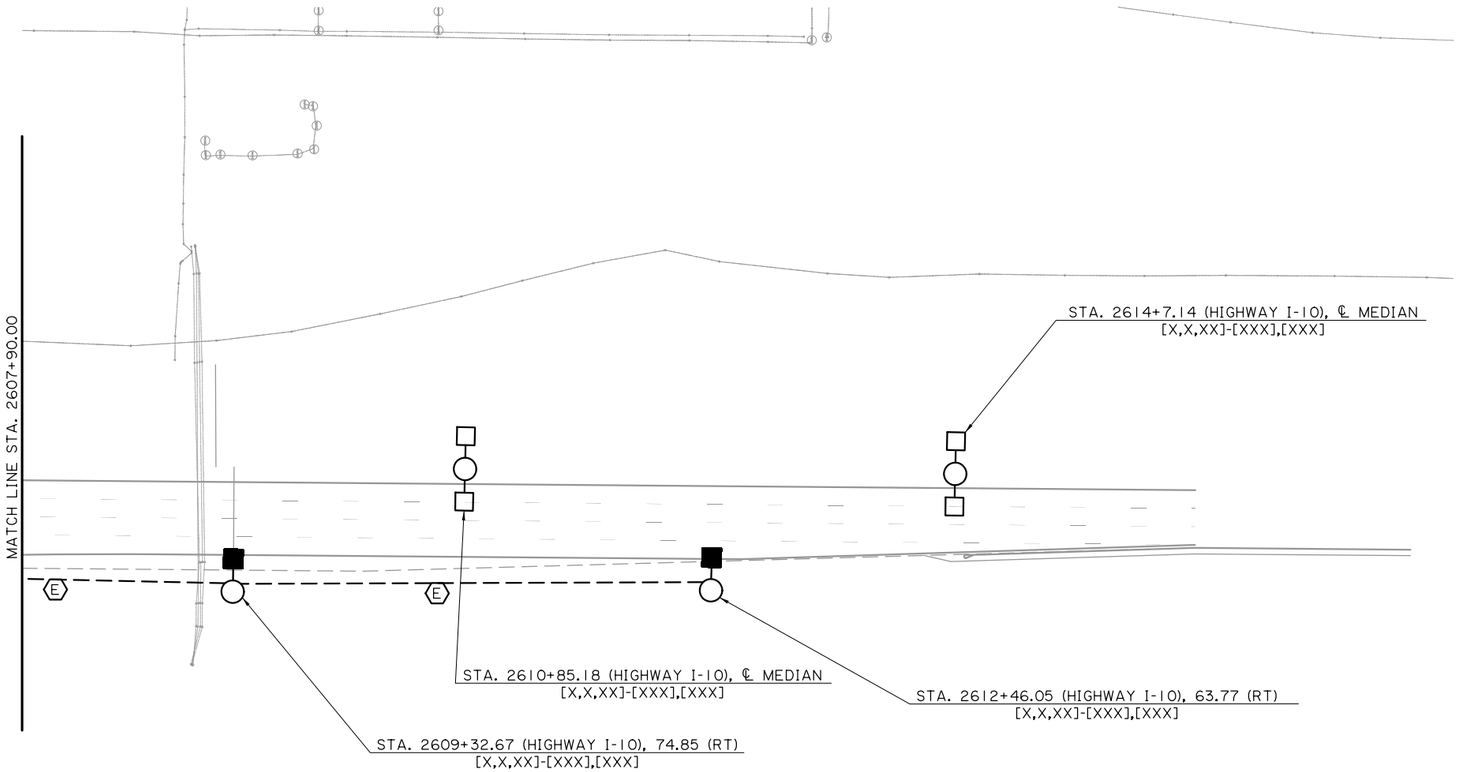

SECTION "Z"

SPECIFIC NOTES:

1. THIS SHEET IS INTENDED ONLY AS A GENERAL OVERVIEW OF THE WORK REQUIRED. OMISSION FROM THIS SHEET OF ANY ITEM SHOWN ELSEWHERE IN THE PLANS DOES NOT RELIEVE THE CONTRACTOR FROM RESPONSIBILITY FOR ANY ASSOCIATED WORK.
2. LABELED CONDUIT RUNS SHOWN CROSSING ROADWAYS, DRIVEWAYS, ETC. SHALL BE INSTALLED IN PROTECTIVE HDPE CASING. SEE LAYOUT FOR LOCATIONS.
3. CONTRACTOR SHALL INSTALL ALL NEW ELECTRICAL WIRING, SPLICES, GROUNDING, AND APPURTENANCES, AS SPECIFIED BY THE ELECTRICAL DETAILS IN THESE PLANS AND MANUFACTURER'S SPECIFICATIONS.
4. REFER TO PLAN SHEET 128 FOR LIGHTING PLAN SECTIONS.
5. CONTRACTOR SHALL INSTALL (1) UNDERGROUND JUNCTION BOX "JB-2" IN ALL LOW MAST CONRETE MOWING APRONS.
6. REFER TO PLAN SHEETS 175-176 FOR CONSTRUCTION DETAILS OF LIGHT POLE FOUNDATION AND JUNCTION BOX INSTALLATION AT EACH MEDIAN BARRIER LOCATION.

✡ NUMBER(S) THAT ARE SHOWN IN PARENTHESES (###) CORRESPOND TO ELECTRICAL EQUIPMENT ITEMS LISTED ON PLAN SHEETS 177 - 181.

LABEL	CONDUIT WITH CONDUCTORS	PAY ITEM
(E)	CONDUIT WITH CONDUCTORS (PVC/HDPE) (1-1/2") (2 #10, 1 #10 STRANDED GROUND)	822-02-XXXXX

SHEET NUMBER	154
PARISH	CALCASIEU
CONTROL SECTION	450-91
STATE PROJECT	H.003931
DESIGN	E. CLAY
CHECK	J. GERHART
DETAIL	E. CLAY
CHECK	J. GERHART
REVIEW	C. LEDET
SERIES #	26 OF 26

TECHNICAL PROPOSAL

PRELIMINARY

FOR REVIEW ONLY

ENGINEER:
JONATHAN E. GERHART

LICENSE #:
43052

DATE:
4/19/2023

NO.	DATE	REVISION OR CHANGE ORDER DESCRIPTION	BY

STATE OF LOUISIANA — DEPARTMENT OF TRANSPORTATION AND DEVELOPMENT

LIGHTING PLAN - 26

STA. 2607+90.00 TO STA. 2617+09.64

I-10 CALCASIEU RIVER BRIDGE P3

DOTD — LOUISIANA DEPARTMENT OF TRANSPORTATION & DEVELOPMENT

CBP — CALCASIEU BRIDGE PARTNERS

E27_Lighting Plan - 26.dgn

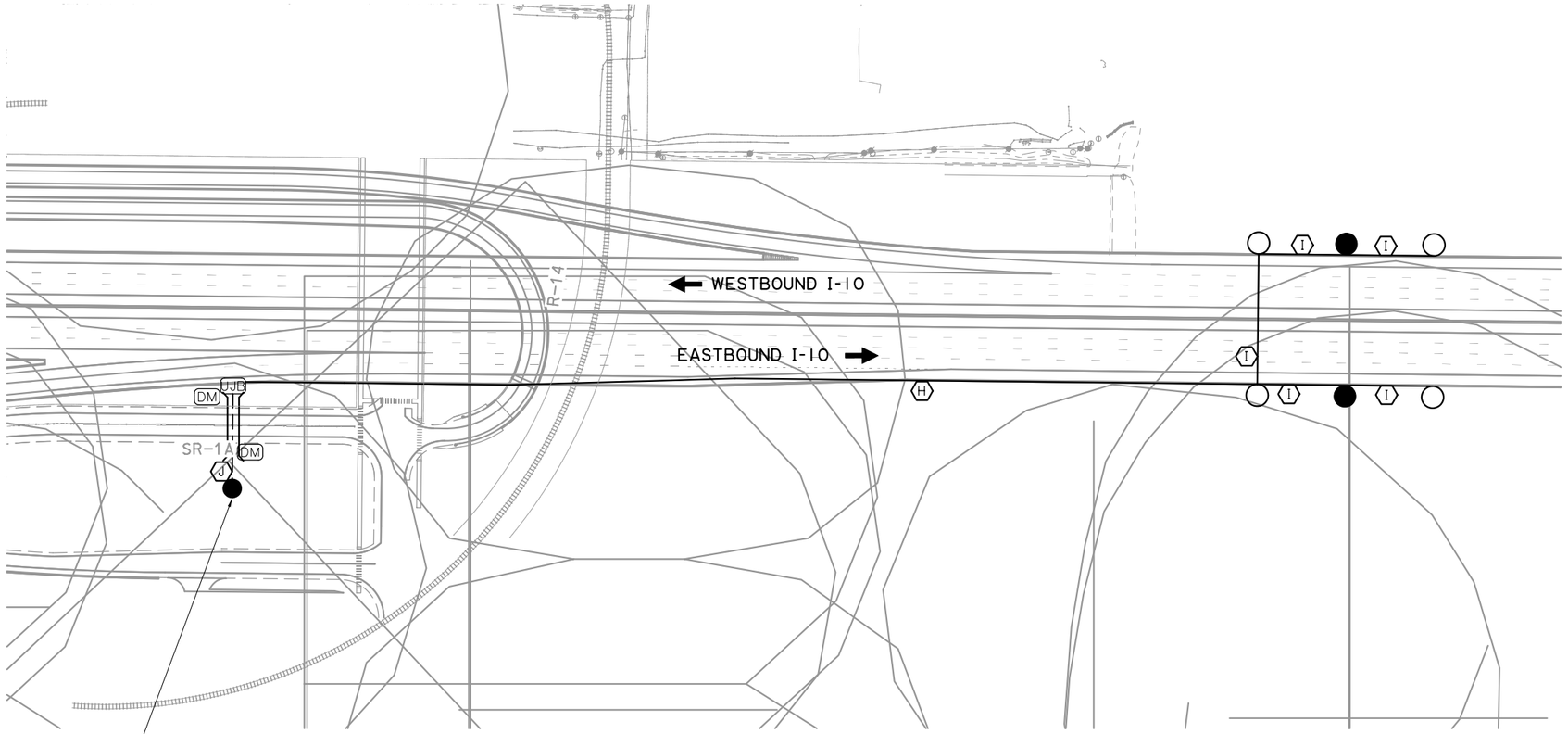

PROPOSED LOCATION FOR
NAVIGATION LIGHTING
SPC

PLAN
SCALE: 1" = 160'

N

LEGEND:

- DIRECTION OF TRAFFIC
- CHANNEL MARGIN LIGHT (100)
- CENTER CHANNEL LIGHT (101)

WIRE & CONDUIT SCHEDULE

(H) CONDUIT WITH CONDUCTORS (RIGID ALUMINUM) (¾") (3#10, 1#10 STRANDED GROUND)
(I) CONDUIT WITH CONDUCTORS (RIGID ALUMINUM) (¾") (2#10, 1#10 STRANDED GROUND)
(J) CONDUIT WITH CONDUCTORS (PVC/HDPE) (1") (3#10, 1#10 BARE STRANDED GROUND)

SPECIFIC NOTES:

1. REFER TO PLAN, PLAN DETAIL SHEETS, AND SPECIFICATIONS FOR ADDITIONAL REQUIREMENTS.
2. ALL EQUIPMENT (JUNCTION BOXES, EXPANSION FITTINGS, PROTECTIVE CASINGS FOR ROADWAY CROSSINGS, DUCT MARKERS, ETC.) NOT SHOWN FOR CLARITY. RISER LAYOUT MAY NOT SHOW ACTUAL VIEW AND LOCATION OF ELECTRICAL EQUIPMENT.
3. CONTRACTOR SHALL INSTALL MARKER TAPE (424) IN ALL UNDERGROUND CONDUIT INSTALLATIONS.
4. SEE PLAN SHEET #908 FOR NAVIGATION LIGHTING DETAILS.
5. DIMENSIONS SHOWN ARE FROM CENTERLINE OF RESPECTIVE BENT TO CENTERLINE OF NEW CHANNEL MARGIN LIGHT AND FROM CENTERLINE OF NEW CHANNEL MAGIN LIGHT TO CENTERLINE OF NEW CENTER CHANNEL LIGHT.

✡ NUMBER(S) THAT ARE SHOWN IN PARENTHESES (###) CORRESPOND TO ELECTRICAL EQUIPMENT ITEMS LISTED ON PLAN SHEETS EXX - EXX.

SHEET NUMBER	155
PARISH	CALCASIEU
CONTROL SECTION	450-91
STATE PROJECT	H.003931
DESIGN	E. CLAY
CHECK	J. GERHART
DETAIL	E. CLAY
CHECK	J. GERHART
REVIEW	C. LEDET
SERIES #	1 OF 1

TECHNICAL PROPOSAL
PRELIMINARY
FOR REVIEW ONLY
ENGINEER:
JONATHAN E. GERHART
LICENSE #:
43052
DATE:
4/19/2023

NO.	DATE	REVISION OR CHANGE ORDER DESCRIPTION	BY

STATE OF LOUISIANA
DEPARTMENT OF TRANSPORTATION AND DEVELOPMENT

CALCASIEU RIVER BRIDGE NAVIGATION LIGHTING PLAN

I-10 CALCASIEU RIVER BRIDGE P3

DOTD
LOUISIANA DEPARTMENT OF TRANSPORTATION & DEVELOPMENT

CBP
CALCASIEU BRIDGE PARTNERS

TECHNICAL PROPOSAL

4/19/2023

LEGEND:

- LUMINAIRE, UNDERPASS (311)
- SJB — JUNCTION BOX, STRUCTURE MOUNT
- CONDUIT, (UNDERGROUND)
- FLEXIBLE CONDUIT
- CONDUIT, (STRUCTURE MOUNT)

N

Scale : 1" = 80'

POLE STATION LABEL:

POLE OFFSET FROM BASELINE (FEET)

STATION — STA. XXX+XX.XX (RAMP OR HIGHWAY), XX (RT./LT.)
[X,X,XX]-[XXX],[XXX]

POLE ID NO.
- SECONDARY POWER CONTROLLER
- CIRCUIT #
- POLE ID #

LUMINAIRE (ITEM #)

POLE (ITEM #)

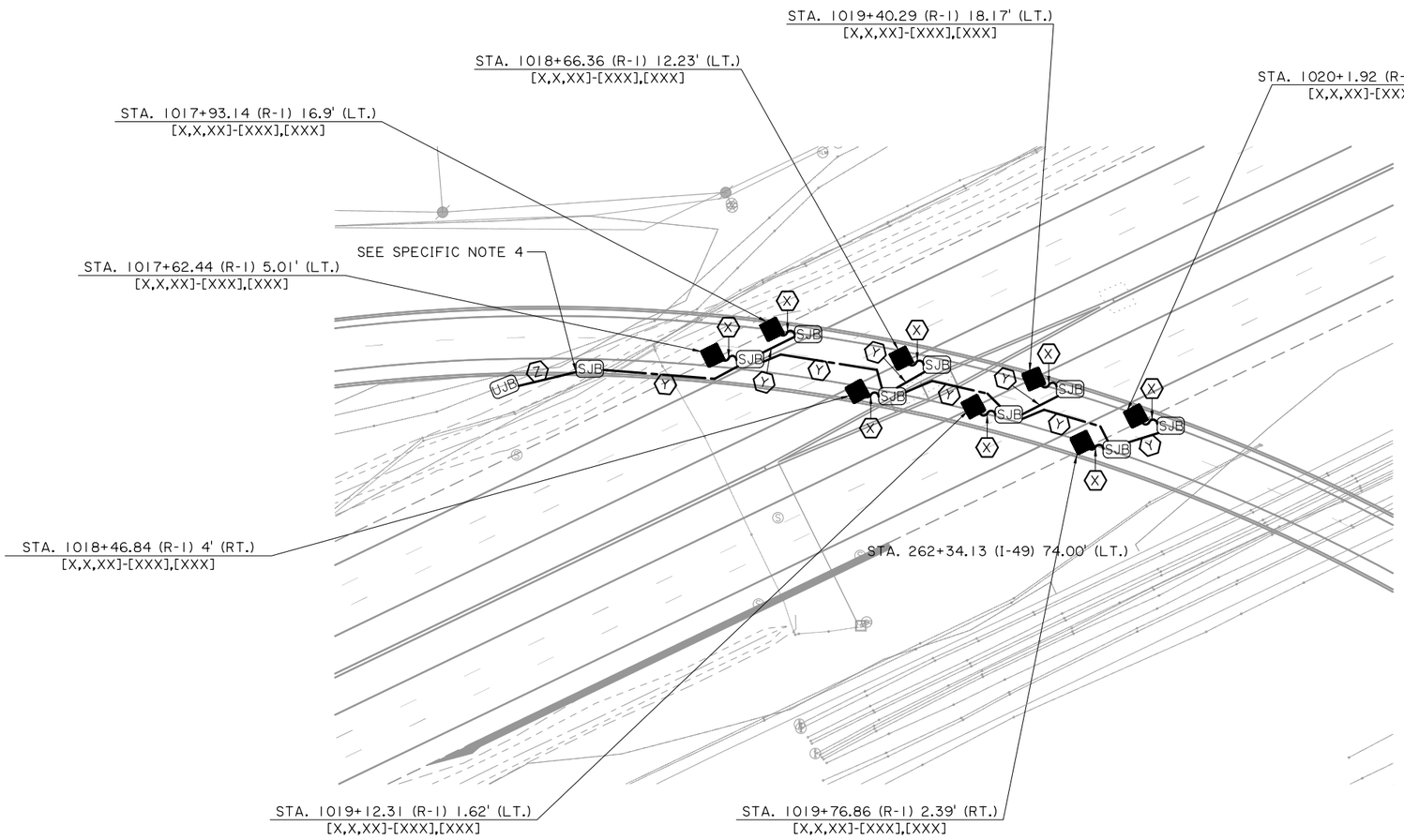

PLAN - R-1 OVERPASS

SPECIFIC NOTES:

1. THIS SHEET IS INTENDED ONLY AS A GENERAL OVERVIEW OF THE WORK REQUIRED. OMISSION FROM THIS SHEET OF ANY ITEM SHOWN ELSEWHERE IN THE PLANS DOES NOT RELIEVE THE CONTRACTOR FROM RESPONSIBILITY FOR ANY ASSOCIATED WORK.
2. LABELED CONDUIT RUNS SHOWN CROSSING ROADWAYS, DRIVEWAYS, ETC. SHALL BE INSTALLED IN PROTECTIVE HDPE CASING. SEE LAYOUT FOR LOCATIONS.
3. CONTRACTOR SHALL INSTALL ALL NEW ELECTRICAL WIRING, SPLICES, GROUNDING, AND APPURTENANCES, AS SPECIFIED BY THE ELECTRICAL DETAILS IN THESE PLANS AND MANUFACTURER'S SPECIFICATIONS.
4. UTILIZE FIBERGLASS CONDUIT TO TRANSITION FROM UNDERGROUND TO STRUCTURE MOUNTED CONDUIT. PROVIDE APPROXIMATELY 5 FEET OF FIBERGLASS CONDUIT, WITH ALL REQUIRED FITTINGS, TO MAKE CONNECTION BETWEEN UNDERGROUND CONDUIT AND THE FIRST STRUCTURE MOUNTED JUNCTION BOX.

✪ NUMBER(S) THAT ARE SHOWN IN PARENTHESES (###) CORRESPOND TO ELECTRICAL EQUIPMENT ITEMS LISTED ON PLAN SHEETS 177 - 181.

LABEL	CONDUIT WITH CONDUCTORS	PAY ITEM
(X)	CONDUIT WITH CONDUCTORS (LTFM) (3/4") (2 #10, 1 #10 GREEN INSULTAED GROUND)	822-02-XXXXX
(Y)	CONDUIT WITH CONDUCTORS (RIGID ALUM) (3/4") (2 #10, 1 #10 GREEN INSULATED GROUND)	822-02-XXXXX
(Z)	CONDUIT WITH CONDUCTORS (PVC/HDPE) (1") (2 #8, 1 #8 BARE SOLID GROUND)	822-02-XXXXX

E29_Underpass - Plan View.dgn

SHEET NUMBER 156

PARISH	CONTROL SECTION	STATE PROJECT
CALCASIEU	450-91	H.003931

DESIGN	DETAIL	REVIEW
E. CLAY	E. CLAY	C. LEDET
CHECK	CHECK	SERIES #
J. GERHART	J. GERHART	1 OF 7

TECHNICAL PROPOSAL

PRELIMINARY

FOR REVIEW ONLY

ENGINEER:
JONATHAN E. GERHART

LICENSE #:
43052

DATE:
4/19/2023

NO.	DATE	REVISION OR CHANGE ORDER DESCRIPTION	BY

STATE OF LOUISIANA — DEPARTMENT OF TRANSPORTATION AND DEVELOPMENT

UNDERPASS LIGHTING PLAN

I-10 OVER R-1

I-10 CALCASIEU RIVER BRIDGE P3

DOTD — LOUISIANA DEPARTMENT OF TRANSPORTATION & DEVELOPMENT

CBP — CALCASIEU BRIDGE PARTNERS

TECHNICAL PROPOSAL

4/19/2023

LEGEND:

- LUMINAIRE, UNDERPASS (311)
- SJB — JUNCTION BOX, STRUCTURE MOUNT
- CONDUIT, (UNDERGROUND)
- FLEXIBLE CONDUIT
- CONDUIT, (STRUCTURE MOUNT)

N

Scale: 1" = 80'

POLE STATION LABEL:

POLE OFFSET FROM BASELINE (FEET)
STATION — STA. XXX+XX.XX (RAMP OR HIGHWAY), XX (RT./LT.)
[X,X,XX]-[XXX],[XXX]
POLE ID NO. — SECONDARY POWER CONTROLLER
CIRCUIT #
POLE ID #
LUMINAIRE (ITEM #)
POLE (ITEM #)

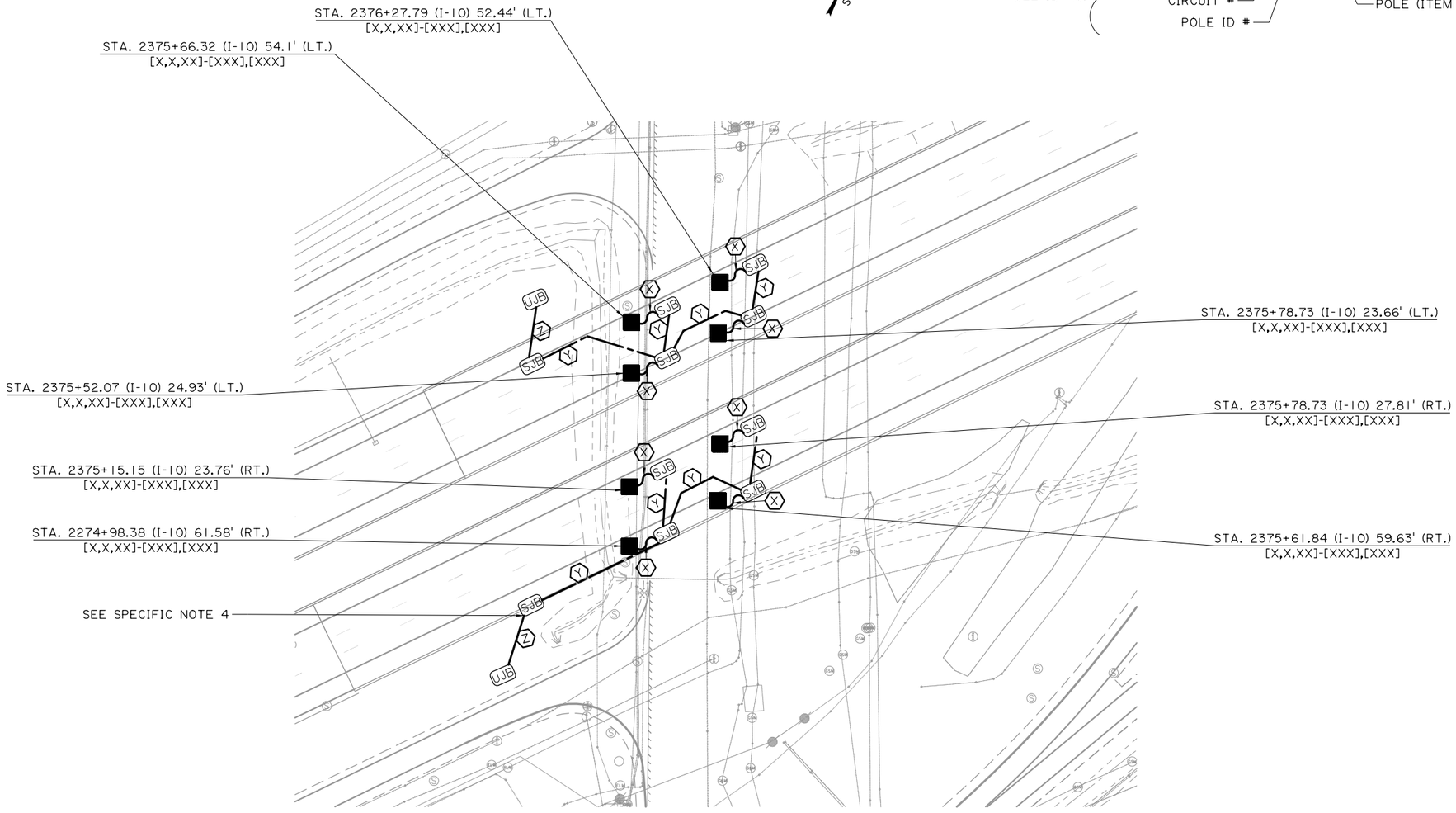

PLAN - OVERPASS AT STATION NO. 2375

SPECIFIC NOTES:

1. THIS SHEET IS INTENDED ONLY AS A GENERAL OVERVIEW OF THE WORK REQUIRED. OMISSION FROM THIS SHEET OF ANY ITEM SHOWN ELSEWHERE IN THE PLANS DOES NOT RELIEVE THE CONTRACTOR FROM RESPONSIBILITY FOR ANY ASSOCIATED WORK.
2. LABELED CONDUIT RUNS SHOWN CROSSING ROADWAYS, DRIVEWAYS, ETC. SHALL BE INSTALLED IN PROTECTIVE HDPE CASING. SEE LAYOUT FOR LOCATIONS.
3. CONTRACTOR SHALL INSTALL ALL NEW ELECTRICAL WIRING, SPLICES, GROUNDING, AND APPURTENANCES, AS SPECIFIED BY THE ELECTRICAL DETAILS IN THESE PLANS AND MANUFACTURER'S SPECIFICATIONS.
4. UTILIZE FIBERGLASS CONDUIT TO TRANSITION FROM UNDERGROUND TO STRUCTURE MOUNTED CONDUIT. PROVIDE APPROXIMATELY 5 FEET OF FIBERGLASS CONDUIT, WITH ALL REQUIRED FITTINGS, TO MAKE CONNECTION BETWEEN UNDERGROUND CONDUIT AND THE FIRST STRUCTURE MOUNTED JUNCTION BOX.

✡ NUMBER(S) THAT ARE SHOWN IN PARENTHESES (###) CORRESPOND TO ELECTRICAL EQUIPMENT ITEMS LISTED ON PLAN SHEETS 177 - 181.

LABEL	CONDUIT WITH CONDUCTORS	PAY ITEM
X	CONDUIT WITH CONDUCTORS (LTFM) (3/4") (2 #10, 1 #10 GREEN INSULTAED GROUND)	822-02-XXXXX
Y	CONDUIT WITH CONDUCTORS (RIGID ALUM) (3/4") (2 #10, 1 #10 GREEN INSULATED GROUND)	822-02-XXXXX
Z	CONDUIT WITH CONDUCTORS (PVC/HDPE) (1") (2 #8, 1 #8 BARE SOLID GROUND)	822-02-XXXXX

E30_Underpass - Plan View.dgn

SHEET NUMBER 157

PARISH	CONTROL SECTION	STATE PROJECT
CALCASIEU	450-91	H.003931

DESIGN	CHECK	DETAIL	CHECK	REVIEW	SERIES
E. CLAY	J. GERHART	E. CLAY	J. GERHART	C. LEDET	2 OF 7

TECHNICAL PROPOSAL
PRELIMINARY
FOR REVIEW ONLY
ENGINEER: JONATHAN E. GERHART
LICENSE #: 43052
DATE: 4/19/2023

NO.	DATE	REVISION OR CHANGE ORDER DESCRIPTION	BY

UNDERPASS LIGHTING PLAN
STA. 2375

I-10 CALCASIEU RIVER BRIDGE P3

DOTD LOUISIANA DEPARTMENT OF TRANSPORTATION & DEVELOPMENT

CBP CALCASIEU BRIDGE PARTNERS

4/19/2023

LEGEND:

- LUMINAIRE, UNDERPASS (311)
- SJB — JUNCTION BOX, STRUCTURE MOUNT
- CONDUIT, (UNDERGROUND)
- FLEXIBLE CONDUIT
- CONDUIT, (STRUCTURE MOUNT)

N

Scale : 1" = 80'

POLE STATION LABEL:

POLE OFFSET FROM BASELINE (FEET)
STATION — STA. XXX+XX.XX (RAMP OR HIGHWAY), XX (RT./LT.)
[X,X,XX]-[XXX],[XXX]
SECONDARY POWER CONTROLLER
POLE ID NO.
CIRCUIT #
POLE ID #
LUMINAIRE (ITEM #)
POLE (ITEM #)

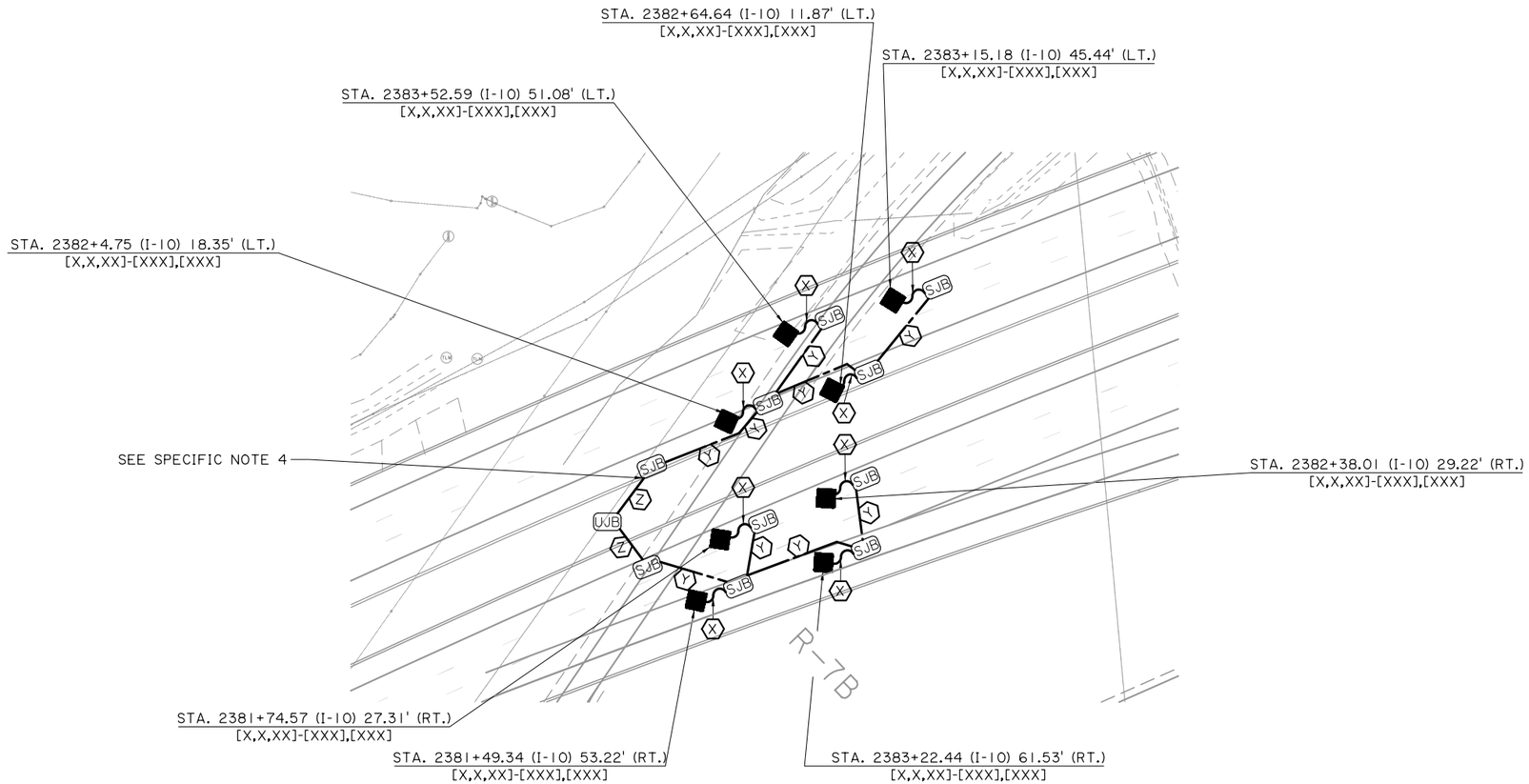

PLAN - OVERPASS AT STATION NO. 3283

SPECIFIC NOTES:

1. THIS SHEET IS INTENDED ONLY AS A GENERAL OVERVIEW OF THE WORK REQUIRED. OMISSION FROM THIS SHEET OF ANY ITEM SHOWN ELSEWHERE IN THE PLANS DOES NOT RELIEVE THE CONTRACTOR FROM RESPONSIBILITY FOR ANY ASSOCIATED WORK.
2. LABELED CONDUIT RUNS SHOWN CROSSING ROADWAYS, DRIVEWAYS, ETC. SHALL BE INSTALLED IN PROTECTIVE HDPE CASING. SEE LAYOUT FOR LOCATIONS.
3. CONTRACTOR SHALL INSTALL ALL NEW ELECTRICAL WIRING, SPLICES, GROUNDING, AND APPURTENANCES, AS SPECIFIED BY THE ELECTRICAL DETAILS IN THESE PLANS AND MANUFACTURER'S SPECIFICATIONS.
4. UTILIZE FIBERGLASS CONDUIT TO TRANSITION FROM UNDERGROUND TO STRUCTURE MOUNTED CONDUIT. PROVIDE APPROXIMATELY 5 FEET OF FIBERGLASS CONDUIT, WITH ALL REQUIRED FITTINGS, TO MAKE CONNECTION BETWEEN UNDERGROUND CONDUIT AND THE FIRST STRUCTURE MOUNTED JUNCTION BOX.

✡ NUMBER(S) THAT ARE SHOWN IN PARENTHESES (###) CORRESPOND TO ELECTRICAL EQUIPMENT ITEMS LISTED ON PLAN SHEETS 177 - 181.

LABEL	CONDUIT WITH CONDUCTORS	PAY ITEM
(X)	CONDUIT WITH CONDUCTORS (LTFM) (3/4") (2 #10, 1 #10 GREEN INSULTAED GROUND)	822-02-XXXXX
(Y)	CONDUIT WITH CONDUCTORS (RIGID ALUM) (3/4") (2 #10, 1 #10 GREEN INSULATED GROUND)	822-02-XXXXX
(Z)	CONDUIT WITH CONDUCTORS (PVC/HDPE) (1") (2 #8, 1 #8 BARE SOLID GROUND)	822-02-XXXXX

SHEET NUMBER 158

PARISH	CONTROL SECTION	STATE PROJECT
CALCASIEU	450-91	H.003931

DESIGN	CHECK	DETAIL	CHECK	REVIEW	SERIES
E. CLAY	J. GERHART	E. CLAY	J. GERHART	C. LEDET	3 OF 7

TECHNICAL PROPOSAL
PRELIMINARY
FOR REVIEW ONLY
ENGINEER:
JONATHAN E. GERHART
LICENSE #:
43052
DATE:
4/19/2023

NO.	DATE	REVISION OR CHANGE ORDER DESCRIPTION	BY

UNDERPASS LIGHTING PLAN
STA. 3283

I-10 CALCASIEU RIVER BRIDGE P3

LOUISIANA DEPARTMENT OF TRANSPORTATION & DEVELOPMENT

CALCASIEU BRIDGE PARTNERS

TECHNICAL PROPOSAL

4/19/2023

LEGEND:

■	LUMINAIRE, UNDERPASS (311)	(SJB) JUNCTION BOX, STRUCTURE MOUNT	CONDUIT, (UNDERGROUND)
S	FLEXIBLE CONDUIT	——-- CONDUIT, (STRUCTURE MOUNT)	

N

Scale : 1" = 80'

POLE STATION LABEL:

POLE OFFSET FROM BASELINE (FEET)

STATION → STA. XXX+XX.XX (RAMP OR HIGHWAY), XX (RT./LT.)
[X,X,XX]-[XXX],[XXX]

POLE ID NO. { SECONDARY POWER CONTROLLER, CIRCUIT #, POLE ID #

LUMINAIRE (ITEM #)

POLE (ITEM #)

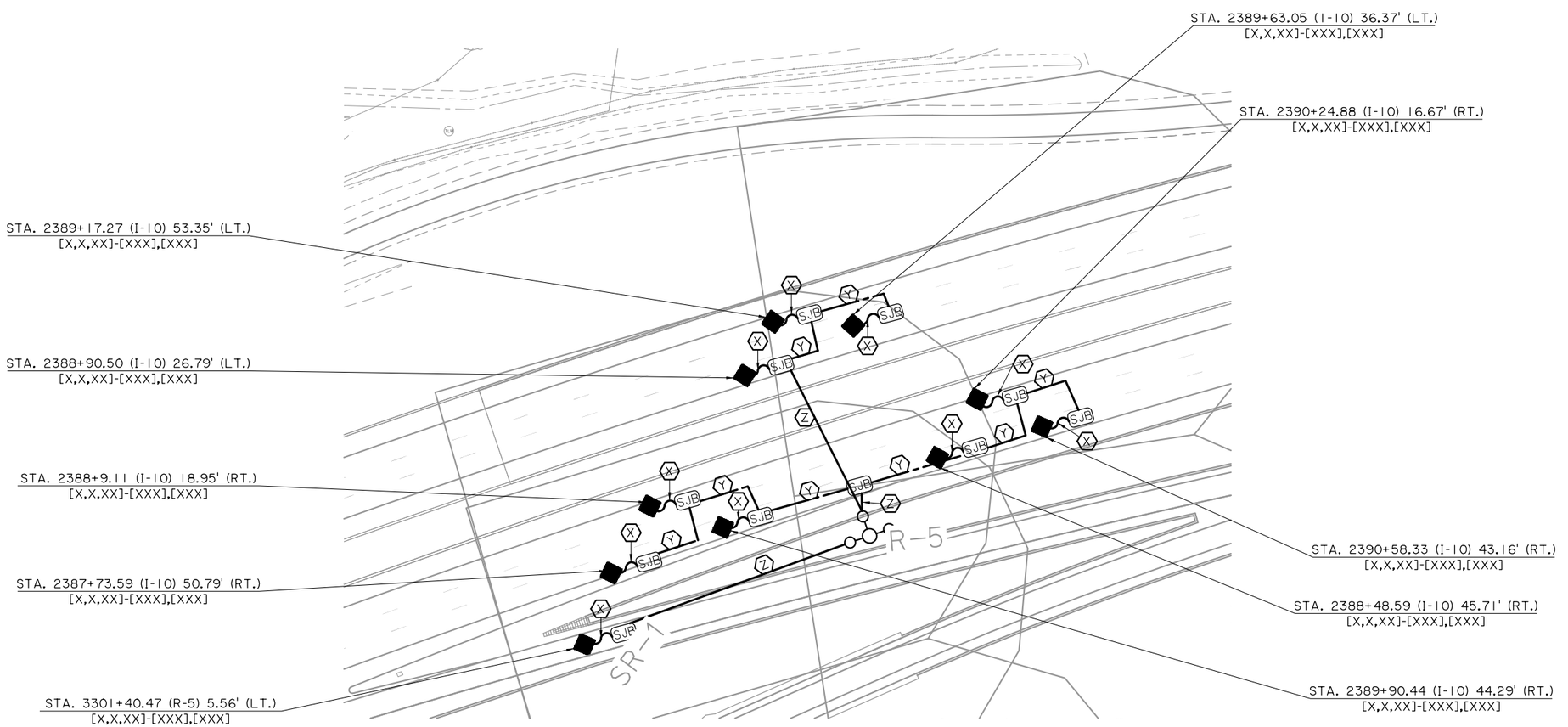

PLAN - OVERPASS AT STATION NO. 2390

SPECIFIC NOTES:

1. THIS SHEET IS INTENDED ONLY AS A GENERAL OVERVIEW OF THE WORK REQUIRED. OMISSION FROM THIS SHEET OF ANY ITEM SHOWN ELSEWHERE IN THE PLANS DOES NOT RELIEVE THE CONTRACTOR FROM RESPONSIBILITY FOR ANY ASSOCIATED WORK.
2. LABELED CONDUIT RUNS SHOWN CROSSING ROADWAYS, DRIVEWAYS, ETC. SHALL BE INSTALLED IN PROTECTIVE HDPE CASING. SEE LAYOUT FOR LOCATIONS.
3. CONTRACTOR SHALL INSTALL ALL NEW ELECTRICAL WIRING, SPLICES, GROUNDING, AND APPURTENANCES, AS SPECIFIED BY THE ELECTRICAL DETAILS IN THESE PLANS AND MANUFACTURER'S SPECIFICATIONS.
4. UTILIZE FIBERGLASS CONDUIT TO TRANSITION FROM UNDERGROUND TO STRUCTURE MOUNTED CONDUIT. PROVIDE APPROXIMATELY 5 FEET OF FIBERGLASS CONDUIT, WITH ALL REQUIRED FITTINGS, TO MAKE CONNECTION BETWEEN UNDERGROUND CONDUIT AND THE FIRST STRUCTURE MOUNTED JUNCTION BOX.

✡ NUMBER(S) THAT ARE SHOWN IN PARENTHESES (###) CORRESPOND TO ELECTRICAL EQUIPMENT ITEMS LISTED ON PLAN SHEETS 177 - 181.

LABEL	CONDUIT WITH CONDUCTORS	PAY ITEM
(X)	CONDUIT WITH CONDUCTORS (LTFM) (3/4") (2 #10, 1 #10 GREEN INSULTAED GROUND)	822-02-XXXXX
(Y)	CONDUIT WITH CONDUCTORS (RIGID ALUM) (3/4") (2 #10, 1 #10 GREEN INSULATED GROUND)	822-02-XXXXX
(Z)	CONDUIT WITH CONDUCTORS (PVC/HDPE) (1") (2 #8, 1 #8 BARE SOLID GROUND)	822-02-XXXXX

SHEET NUMBER 159

PARISH	CONTROL SECTION	STATE PROJECT
CALCASIEU	450-91	H.003931

DESIGN	CHECK	DETAIL	CHECK	REVIEW	SERIES
E. CLAY	J. GERHART	E. CLAY	J. GERHART	C. LEDET	4 OF 7

TECHNICAL PROPOSAL

PRELIMINARY

FOR REVIEW ONLY

ENGINEER:
JONATHAN E. GERHART

LICENSE #:
43052

DATE:
4/19/2023

NO.	DATE	REVISION OR CHANGE ORDER DESCRIPTION	BY

STATE OF LOUISIANA

UNDERPASS LIGHTING PLAN

STA. 2390

I-10 CALCASIEU RIVER BRIDGE P3

DOTD LOUISIANA DEPARTMENT OF TRANSPORTATION & DEVELOPMENT

CBP CALCASIEU BRIDGE PARTNERS

E32_Underpass - Plan View.dgn

TECHNICAL PROPOSAL

4/19/2023

LEGEND:

- LUMINAIRE, UNDERPASS (311)
- SJB — JUNCTION BOX, STRUCTURE MOUNT
- CONDUIT, (UNDERGROUND)
- FLEXIBLE CONDUIT
- CONDUIT, (STRUCTURE MOUNT)

N

Scale : 1" = 80'

POLE STATION LABEL:

POLE OFFSET FROM BASELINE (FEET)

STATION — STA. XXX+XX.XX (RAMP OR HIGHWAY), XX (RT./LT.)
[X,X,XX]-[XXX],[XXX]

POLE ID NO. { SECONDARY POWER CONTROLLER, CIRCUIT #, POLE ID #

LUMINAIRE (ITEM #)

POLE (ITEM #)

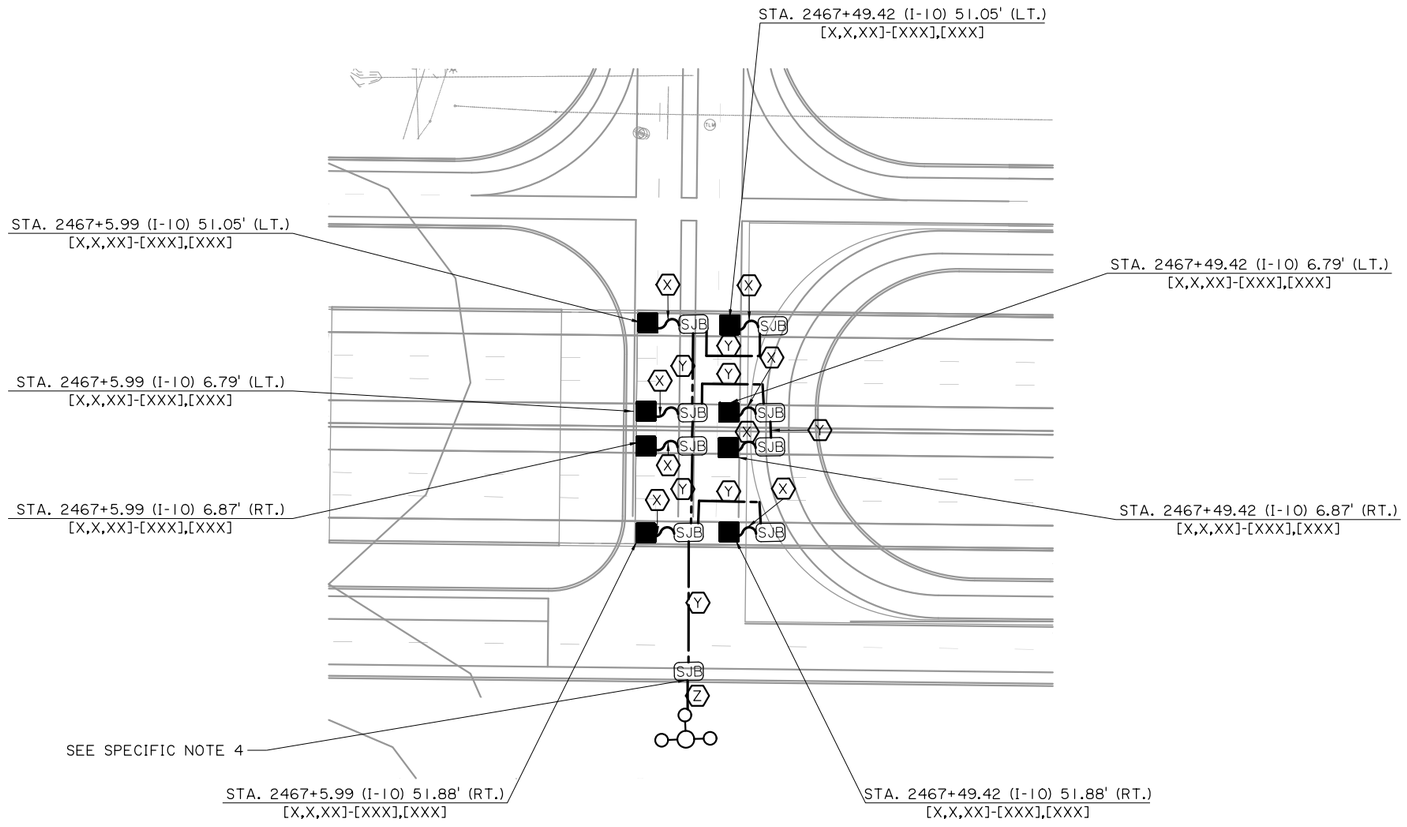

PLAN - OVERPASS AT STATION NO. 2467

SPECIFIC NOTES:

1. THIS SHEET IS INTENDED ONLY AS A GENERAL OVERVIEW OF THE WORK REQUIRED. OMISSION FROM THIS SHEET OF ANY ITEM SHOWN ELSEWHERE IN THE PLANS DOES NOT RELIEVE THE CONTRACTOR FROM RESPONSIBILITY FOR ANY ASSOCIATED WORK.
2. LABELED CONDUIT RUNS SHOWN CROSSING ROADWAYS, DRIVEWAYS, ETC. SHALL BE INSTALLED IN PROTECTIVE HDPE CASING. SEE LAYOUT FOR LOCATIONS.
3. CONTRACTOR SHALL INSTALL ALL NEW ELECTRICAL WIRING, SPLICES, GROUNDING, AND APPURTENANCES, AS SPECIFIED BY THE ELECTRICAL DETAILS IN THESE PLANS AND MANUFACTURER'S SPECIFICATIONS.
4. UTILIZE FIBERGLASS CONDUIT TO TRANSITION FROM UNDERGROUND TO STRUCTURE MOUNTED CONDUIT. PROVIDE APPROXIMATELY 5 FEET OF FIBERGLASS CONDUIT, WITH ALL REQUIRED FITTINGS, TO MAKE CONNECTION BETWEEN UNDERGROUND CONDUIT AND THE FIRST STRUCTURE MOUNTED JUNCTION BOX.

✡ NUMBER(S) THAT ARE SHOWN IN PARENTHESES (###) CORRESPOND TO ELECTRICAL EQUIPMENT ITEMS LISTED ON PLAN SHEETS 177 - 181.

LABEL	CONDUIT WITH CONDUCTORS	PAY ITEM
X	CONDUIT WITH CONDUCTORS (LTFM) (3/4") (2 #10, 1 #10 GREEN INSULTAED GROUND)	822-02-XXXXX
Y	CONDUIT WITH CONDUCTORS (RIGID ALUM) (3/4") (2 #10, 1 #10 GREEN INSULATED GROUND)	822-02-XXXXX
Z	CONDUIT WITH CONDUCTORS (PVC/HDPE) (1") (2 #8, 1 #8 BARE SOLID GROUND)	822-02-XXXXX

SHEET NUMBER 160

PARISH	CONTROL SECTION	STATE PROJECT
CALCASIEU	450-91	H.003931

DESIGN	CHECK	DETAIL	CHECK	REVIEW	SERIES
E. CLAY	J. GERHART	E. CLAY	J. GERHART	C. LEDET	5 OF 7

TECHNICAL PROPOSAL

PRELIMINARY

FOR REVIEW ONLY

ENGINEER:
JONATHAN E. GERHART

LICENSE #:
43052

DATE:
4/19/2023

NO.	DATE	REVISION OR CHANGE ORDER DESCRIPTION	BY

UNDERPASS LIGHTING PLAN
STA. 2467

I-10 CALCASIEU RIVER BRIDGE P3

DOTD LOUISIANA DEPARTMENT OF TRANSPORTATION & DEVELOPMENT

CBP CALCASIEU BRIDGE PARTNERS

B33_Underpass - Plan View.dgn

TECHNICAL PROPOSAL

4/19/2023

LEGEND:

- LUMINAIRE, UNDERPASS (311)
- SJB — JUNCTION BOX, STRUCTURE MOUNT
- CONDUIT, (UNDERGROUND)
- FLEXIBLE CONDUIT
- CONDUIT, (STRUCTURE MOUNT)

N

Scale : 1" = 80'

POLE STATION LABEL:

POLE OFFSET FROM BASELINE (FEET)

STATION — STA. XXX+XX.XX (RAMP OR HIGHWAY), XX (RT./LT.)
[X,X,XX]-[XXX],[XXX]

POLE ID NO. — SECONDARY POWER CONTROLLER
CIRCUIT #
POLE ID #
LUMINAIRE (ITEM #)
POLE (ITEM #)

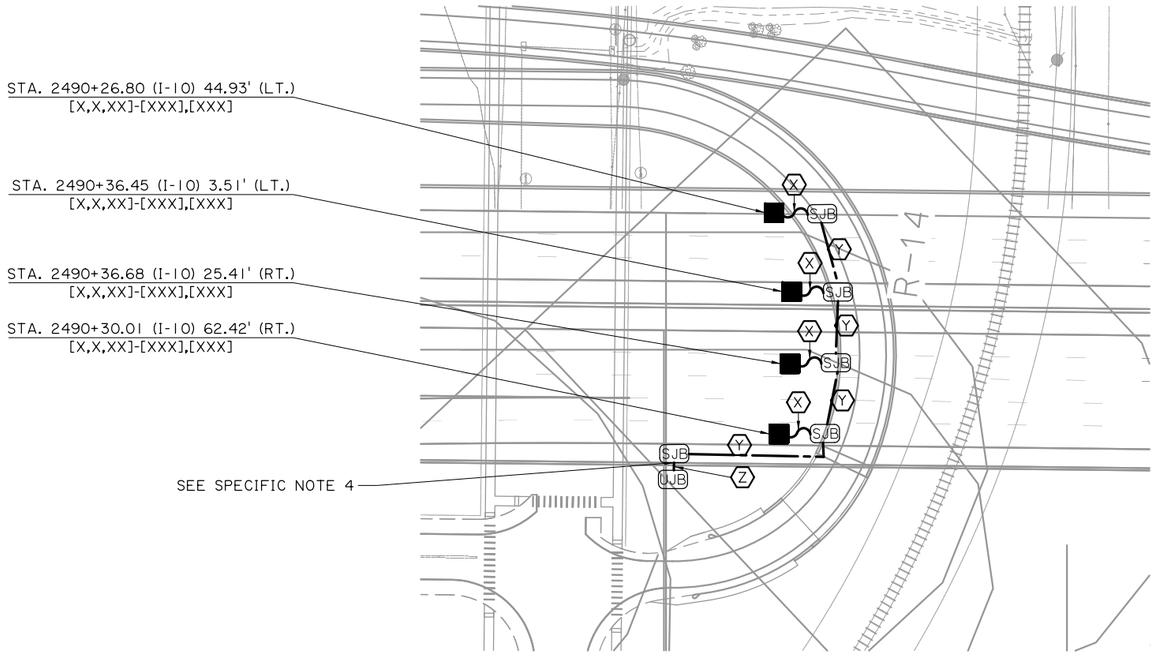

PLAN - OVERPASS AT STATION NO. 2490

SPECIFIC NOTES:

1. THIS SHEET IS INTENDED ONLY AS A GENERAL OVERVIEW OF THE WORK REQUIRED. OMISSION FROM THIS SHEET OF ANY ITEM SHOWN ELSEWHERE IN THE PLANS DOES NOT RELIEVE THE CONTRACTOR FROM RESPONSIBILITY FOR ANY ASSOCIATED WORK.
2. LABELED CONDUIT RUNS SHOWN CROSSING ROADWAYS, DRIVEWAYS, ETC. SHALL BE INSTALLED IN PROTECTIVE HDPE CASING. SEE LAYOUT FOR LOCATIONS.
3. CONTRACTOR SHALL INSTALL ALL NEW ELECTRICAL WIRING, SPLICES, GROUNDING, AND APPURTENANCES, AS SPECIFIED BY THE ELECTRICAL DETAILS IN THESE PLANS AND MANUFACTURER'S SPECIFICATIONS.
4. UTILIZE FIBERGLASS CONDUIT TO TRANSITION FROM UNDERGROUND TO STRUCTURE MOUNTED CONDUIT. PROVIDE APPROXIMATELY 5 FEET OF FIBERGLASS CONDUIT, WITH ALL REQUIRED FITTINGS, TO MAKE CONNECTION BETWEEN UNDERGROUND CONDUIT AND THE FIRST STRUCTURE MOUNTED JUNCTION BOX.

✡ NUMBER(S) THAT ARE SHOWN IN PARENTHESES (###) CORRESPOND TO ELECTRICAL EQUIPMENT ITEMS LISTED ON PLAN SHEETS 177 - 181.

LABEL	CONDUIT WITH CONDUCTORS	PAY ITEM
X	CONDUIT WITH CONDUCTORS (LTFM) (3/4") (2 #10, 1 #10 GREEN INSULTAED GROUND)	822-02-XXXXX
Y	CONDUIT WITH CONDUCTORS (RIGID ALUM) (3/4") (2 #10, 1 #10 GREEN INSULATED GROUND)	822-02-XXXXX
Z	CONDUIT WITH CONDUCTORS (PVC/HDPE) (1") (2 #8, 1 #8 BARE SOLID GROUND)	822-02-XXXXX

SHEET NUMBER 161

PARISH	CONTROL SECTION	STATE PROJECT
CALCASIEU	450-91	H.003931

DESIGN	CHECK	DETAIL	CHECK	REVIEW	SERIES
E. CLAY	J. GERHART	E. CLAY	J. GERHART	C. LEDET	6 OF 7

TECHNICAL PROPOSAL

PRELIMINARY

FOR REVIEW ONLY

ENGINEER:
JONATHAN E. GERHART

LICENSE #:
43052

DATE:
4/19/2023

NO.	DATE	REVISION OR CHANGE ORDER DESCRIPTION	BY

UNDERPASS LIGHTING PLAN
STA. 2490

I-10 CALCASIEU RIVER BRIDGE P3

LOUISIANA DEPARTMENT OF TRANSPORTATION & DEVELOPMENT

CBP CALCASIEU BRIDGE PARTNERS

E34_Underpass - Plan View.dgn

4/19/2023

TECHNICAL PROPOSAL

LEGEND:

- LUMINAIRE, UNDERPASS (311)
- SJB — JUNCTION BOX, STRUCTURE MOUNT
- CONDUIT, (UNDERGROUND)
- FLEXIBLE CONDUIT
- CONDUIT, (STRUCTURE MOUNT)

N

Scale : 1" = 80'

POLE STATION LABEL:

POLE OFFSET FROM BASELINE (FEET)

STATION — STA. XXX+XX.XX (RAMP OR HIGHWAY), XX (RT./LT.)

[X,X,XX]-[XXX],[XXX]

POLE ID NO. — SECONDARY POWER CONTROLLER, CIRCUIT #, POLE ID #

LUMINAIRE (ITEM #)

POLE (ITEM #)

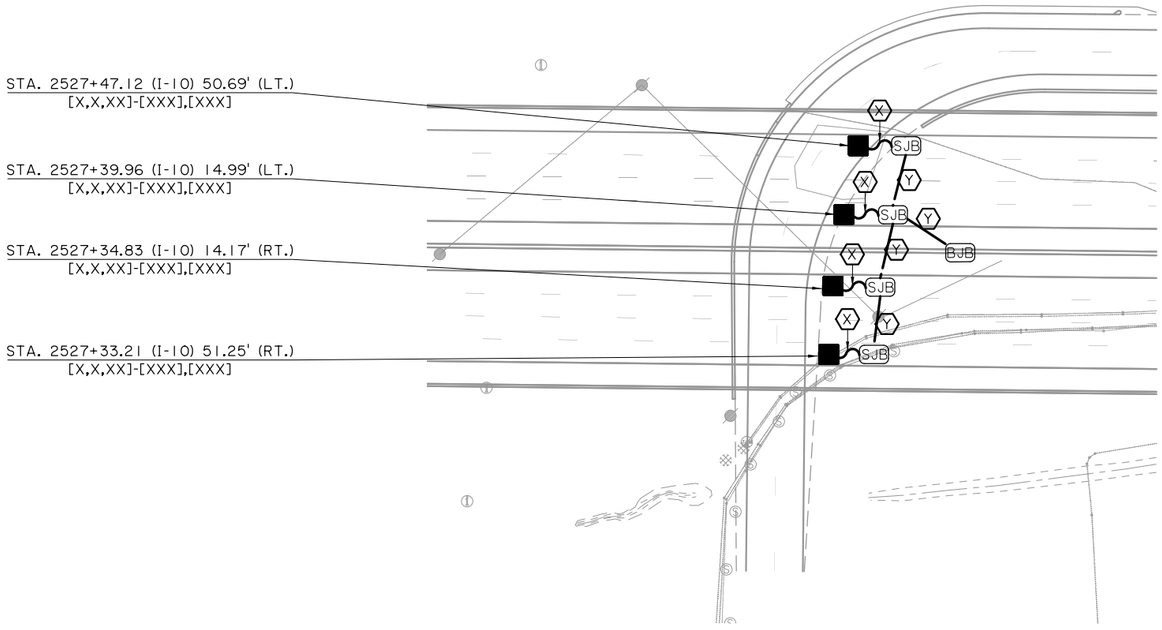

PLAN - OVERPASS AT STATION NO. 2527

SPECIFIC NOTES:

1. THIS SHEET IS INTENDED ONLY AS A GENERAL OVERVIEW OF THE WORK REQUIRED. OMISSION FROM THIS SHEET OF ANY ITEM SHOWN ELSEWHERE IN THE PLANS DOES NOT RELIEVE THE CONTRACTOR FROM RESPONSIBILITY FOR ANY ASSOCIATED WORK.
2. LABELED CONDUIT RUNS SHOWN CROSSING ROADWAYS, DRIVEWAYS, ETC. SHALL BE INSTALLED IN PROTECTIVE HDPE CASING. SEE LAYOUT FOR LOCATIONS.
3. CONTRACTOR SHALL INSTALL ALL NEW ELECTRICAL WIRING, SPLICES, GROUNDING, AND APPURTENANCES, AS SPECIFIED BY THE ELECTRICAL DETAILS IN THESE PLANS AND MANUFACTURER'S SPECIFICATIONS.

✡ NUMBER(S) THAT ARE SHOWN IN PARENTHESES (###) CORRESPOND TO ELECTRICAL EQUIPMENT ITEMS LISTED ON PLAN SHEETS 177 - 181.

LABEL	CONDUIT WITH CONDUCTORS	PAY ITEM
(X)	CONDUIT WITH CONDUCTORS (LTFM) (3/4") (2 #10, 1 #10 GREEN INSULTAED GROUND)	822-02-XXXXX
(Y)	CONDUIT WITH CONDUCTORS (RIGID ALUM) (3/4") (2 #10, 1 #10 GREEN INSULATED GROUND)	822-02-XXXXX

B35_Underpass - Plan View.dgn

SHEET NUMBER 162

PARISH	CONTROL SECTION	STATE PROJECT
CALCASIEU	450-91	H.003931

DESIGN	CHECK	DETAIL	CHECK	REVIEW	SERIES = 7 of 7
E. CLAY	J. GERHART	E. CLAY	J. GERHART	C. LEDET	

TECHNICAL PROPOSAL
PRELIMINARY
FOR REVIEW ONLY
ENGINEER:
JONATHAN E. GERHART
LICENSE #:
43052
DATE:
4/19/2023

NO.	DATE	REVISION OR CHANGE ORDER DESCRIPTION	BY

UNDERPASS LIGHTING PLAN
STA. 2527

I-10 CALCASIEU RIVER BRIDGE P3

DOTD LOUISIANA DEPARTMENT OF TRANSPORTATION & DEVELOPMENT

CBP CALCASIEU BRIDGE PARTNERS

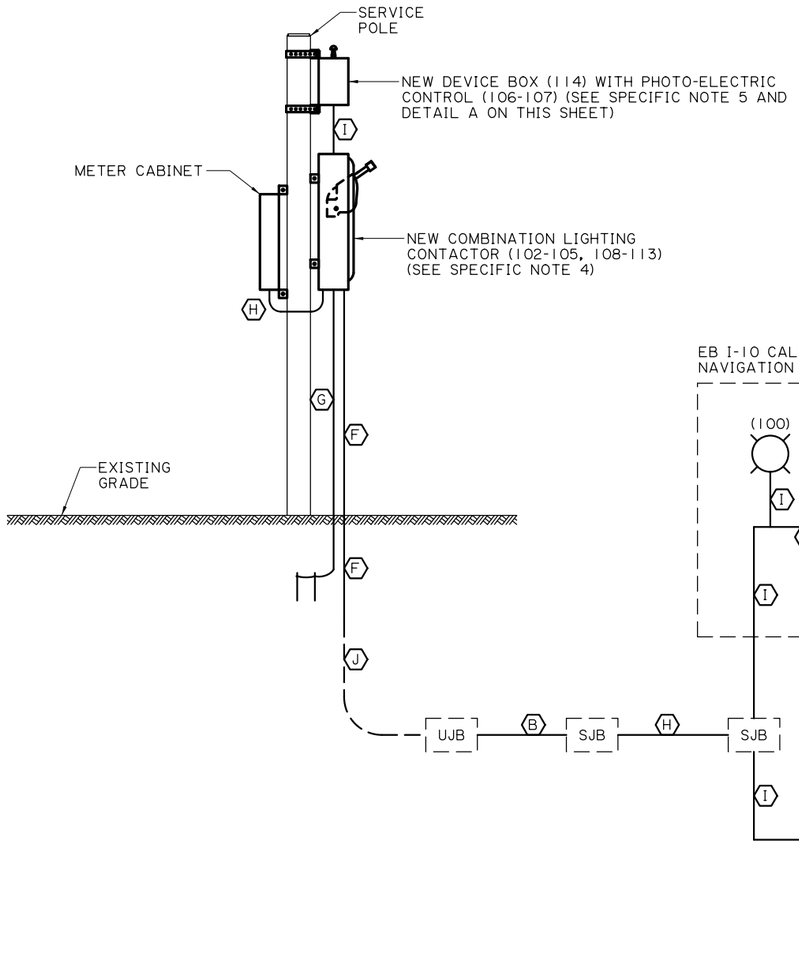

I-10 CALCASIEU BRIDGE NAVIGATION LIGHTING RISER DIAGRAM

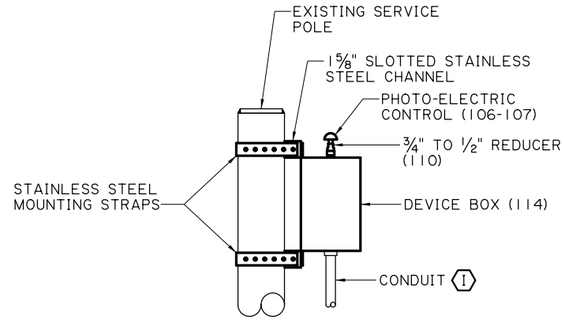

DETAIL A

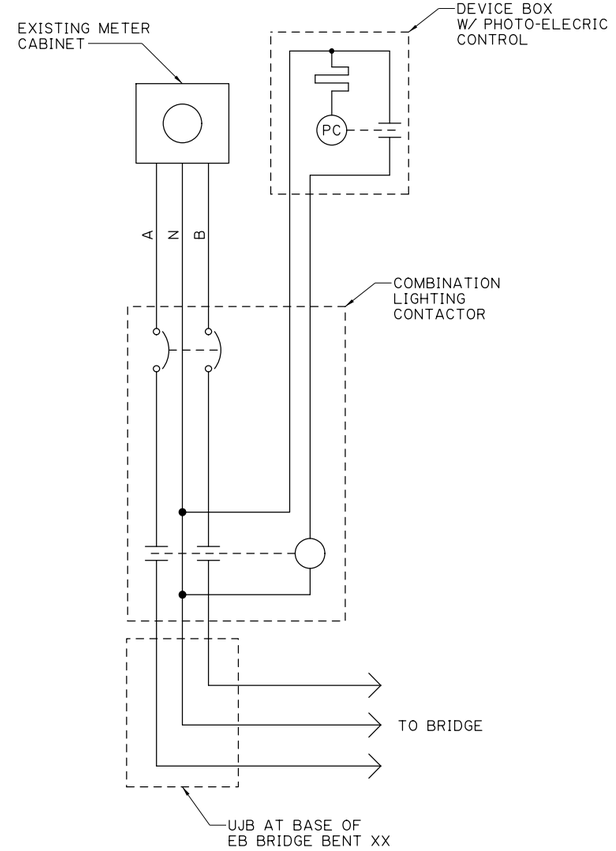

ELECTRICAL SCHEMATIC

WIRE & CONDUIT SCHEDULE

- (F) CONDUIT WITH CONDUCTORS (FIBERGLASS) (1") (3#10, 1#10 BARE STRANDED GROUND)
- (G) CONDUIT WITH CONDUCTORS (PVC/HDPE) (¾") (1#2 BARE STRANDED GROUND)
- (H) CONDUIT WITH CONDUCTORS (RIGID ALUMINUM) (¾") (3#10, 1#10 STRANDED GROUND)
- (I) CONDUIT WITH CONDUCTORS (RIGID ALUMINUM) (¾") (2#10, 1#10 STRANDED GROUND)
- (J) CONDUIT WITH CONDUCTORS (PVC/HDPE) (1") (3#10, 1#10 BARE STRANDED GROUND)

LEGEND

- CONDUIT WITH CONDUCTORS, (405, 406, 414, 415)
- CONDUIT WITH CONDUCTORS, UNDERGROUND (409, 414, 415)
- (??) CONDUIT LABEL
- NAVIGATION LIGHT (100, 101)

SPECIFIC NOTES:

1. REFER TO PLAN, PLAN DETAIL SHEETS, AND SPECIFICATIONS FOR ADDITIONAL REQUIREMENTS.
2. ALL EQUIPMENT (JUNCTION BOXES, EXPANSION FITTINGS, PROTECTIVE CASINGS FOR ROADWAY CROSSINGS, DUCT MARKERS, ETC.) NOT SHOWN FOR CLARITY. RISER LAYOUT MAY NOT SHOW ACTUAL VIEW AND LOCATION OF ELECTRICAL EQUIPMENT.
3. CONTRACTOR SHALL INSTALL MARKER TAPE (424) IN ALL UNDERGROUND CONDUIT INSTALLATIONS.
4. MOUNT NEW COMBINATION LIGHTING CONTACTOR ENCLOSURE ON BACK OF SERVICE POLE SO THAT TOP OF ENCLOSURE IS APPROX. 6' ABOVE EXISTING GRADE.
5. MOUNT NEW DEVICE BOX ON SERVICE POLE SO THAT PHOTO-ELECTRIC CONTROL IS FACING NORTH AND BOTTOM OF ENCLOSURE IS APPROX. 10' ABOVE EXISTING GRADE.

✡ NUMBER(S) THAT ARE SHOWN IN PARENTHESES (###) CORRESPOND TO ELECTRICAL EQUIPMENT ITEMS LISTED ON PLAN SHEETS 177-181.

SHEET NUMBER	163
PARISH	CALCASIEU
CONTROL SECTION	450-91
STATE PROJECT	H.003931
DESIGN	E. CLAY
CHECK	J. GERHART
DETAIL	E. CLAY
CHECK	J. GERHART
REVIEW	C. LEDET
SERIES #	1 OF 1

TECHNICAL PROPOSAL
PRELIMINARY
FOR REVIEW ONLY
ENGINEER: JONATHAN E. GERHART
LICENSE #: 43052
DATE: 4/19/2023

NO.	DATE	REVISION OR CHANGE ORDER DESCRIPTION	BY

RISER DIAGRAM
CALCASIEU RIVER BRIDGE

I-10 CALCASIEU RIVER BRIDGE P3

LOUISIANA DEPARTMENT OF TRANSPORTATION & DEVELOPMENT

CALCASIEU BRIDGE PARTNERS

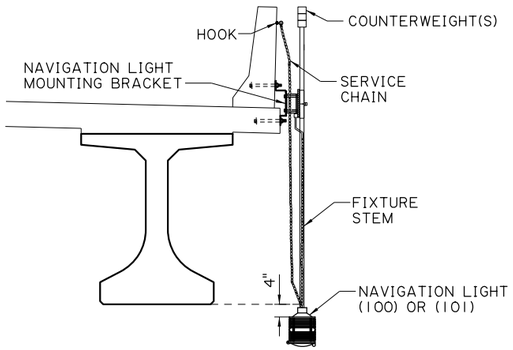

OBJECTIVE: INSTALL ALL NAVIGATION LIGHTS SUCH THAT WHEN DOWN, THE BOTTOM OF EACH NAVIGATION LIGHT SHALL BE 4" TO 6" (MAX.) BELOW LOW STEEL OR CONCRETE. EACH NAVIGATION LIGHT SHALL ROTATE AROUND THE PIVOT POINT FOR MAINTENANCE OF NAVIGATION LIGHT FROM THE ROADWAY DECK. COUNTERWEIGHT STEMS SHALL NOT BE HIGHER THAN THE TOP OF THE RAILING OR BARRIER.

TYPICAL SPAN NAVIGATION LIGHT MOUNTING DETAIL

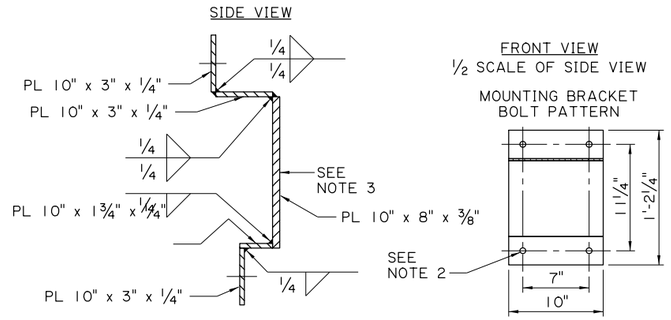

NAVIGATION LIGHT MOUNTING BRACKET DETAIL

NOTES:
1) STEEL MOUNTING BRACKET GALVANIZED AFTER FABRICATION AND HOLES DRILLED. ALL WELDS CONTINUOUS. 6 BRACKETS REQUIRED.
2) BRACKET MOUNTING BOLTS: 3/4"ø, 10" GALV. STEEL, PRECAST 8" INTO CONCRETE, 4 (FOUR) AT EACH LOCATION.
3) NAV. LIGHT MOUNTING JUNCTION BOX BOLTS MAY NEED TO BE INSERTED INTO MOUNTING BRACKET HOLES PRIOR TO BOLTING MOUNTING BRACKETS TO THE SPAN. MOUNTING JUNCTION BOX BOLT PATTERN PER MANUFACTURER, CENTERED AND SQUARED ON THIS PLATE.

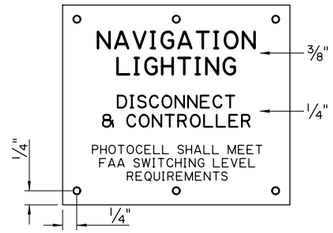

DISCONNECT AND CONTROLLER IDENTIFICATION LABEL:

THE LIGHTING DISCONNECT AND CONTROLLER SHALL HAVE LABELS AS SHOWN BELOW. LABELS SHALL BE FABRICATED FROM 1/16" THICK (MINIMUM) PHENOL PLATE ENGRAVED STOCK. LABELS SHALL HAVE SATIN BLACK OUTER LAYER. LABELS SHALL HAVE WHITE INNER LAYER. LABELS SHALL HAVE 45° BEVELED EDGES. LABEL NAMES SHALL HAVE (MINIMUM) BLOCK-STYLE LETTERS AS SHOWN BELLOW. LABELS SHALL HAVE SIX (6) 1/8" (MINIMUM) DIAMETER PRE-DRILLED HOLES FOR MOUNTING LABEL. LABELS SHALL BE FASTENED TO EQUIPMENT USING #6-32 (MINIMUM) MARINE DUTY STAINLESS STEEL SELF-TAPPING MACHINE SCREWS HAVING 30000 PSI (MINIMUM) YIELD STRENGTH. LABELS SHALL BE LEVEL AFTER INSTALLATION. ANY VARIATIONS IN LABEL SIZE MUST BE SUBMITTED TO THE BRIDGE DESIGN ENGINEER FOR APPROVAL.

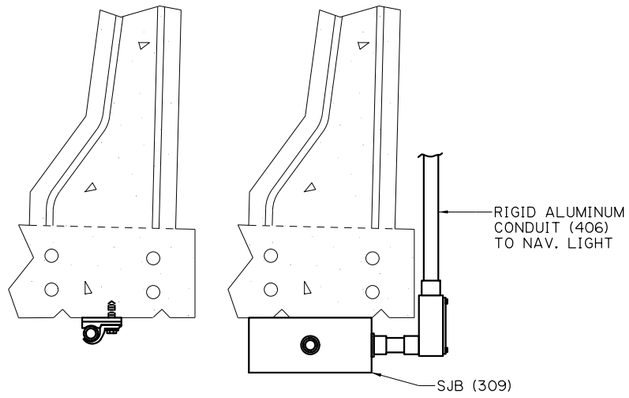

NOTES:
1) NEMA 4X MYERS HUBS WITH GROUNDING BUSHING SHALL BE USED ON ALL METAL CONDUITS, AT JUNCTION AND PULL BOXES BONDED TO GROUNDING CONDUCTOR.
2) USE ALUMINUM CONDUIT AND FORM 7 COPPER FREE ALUMINUM LB'S (NOT LTFMC) TO TRANSITION FROM THE JUNCTION BOX MOUNTED ON THE BOTTOM OF THE SPAN TO THE NAVIGATION LIGHT JUNCTION BOX MOUNTED ON THE BACK OF THE BARRIER.
3) USE A REBAR DETECTION DEVICE TO PREVENT DRILLING AND ANCHORING AT REBAR LOCATIONS.

BARRIER MOUNTED BOXES AND ALUMINUM CONDUIT DETAILS

(TYPICAL AT ALL NAVIGATION LIGHT LOCATIONS)

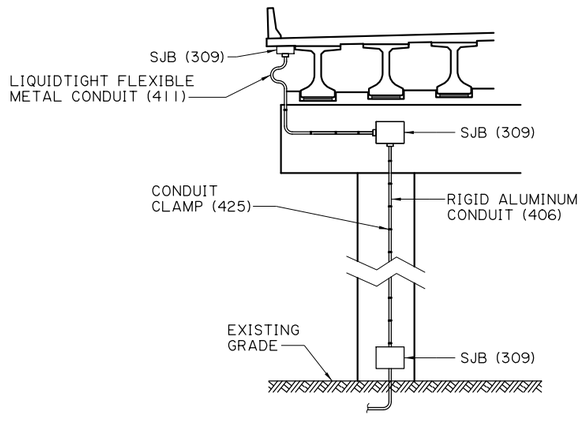

CONDUIT ROUTING TO BRIDGE BARRIER

(TYPICAL FOR ROUTING TO EB BRIDGE AT BENT 18 AND WB BRIDGE AT BENT 18)

✡ NUMBER(S) THAT ARE SHOWN IN PARENTHESES (###) CORRESPOND TO ELECTRICAL EQUIPMENT ITEMS LISTED ON PLAN SHEETS 177-181.

SHEET NUMBER 164

PARISH	CONTROL SECTION	STATE PROJECT
CALCASIEU	450-91	H.003931

DESIGN	CHECK	DETAIL	CHECK	REVIEW	SERIES
E. CLAY	J. GERHART	E. CLAY	J. GERHART	C. LEDET	1 OF 1

TECHNICAL PROPOSAL
PRELIMINARY
FOR REVIEW ONLY
ENGINEER: JONATHAN E. GERHART
LICENSE #: 43052
DATE: 4/19/2023

NO.	DATE	REVISION OR CHANGE ORDER DESCRIPTION	BY

NAVIGATION LIGHTING DETAILS

I-10 CALCASIEU RIVER BRIDGE P3

LOUISIANA DEPARTMENT OF TRANSPORTATION & DEVELOPMENT

CALCASIEU BRIDGE PARTNERS

4/19/2023

TECHNICAL PROPOSAL

E37_Navigation Lighting Details.dgn

4/19/2023

TECHNICAL PROPOSAL

ELECTRICAL SCHEMATIC

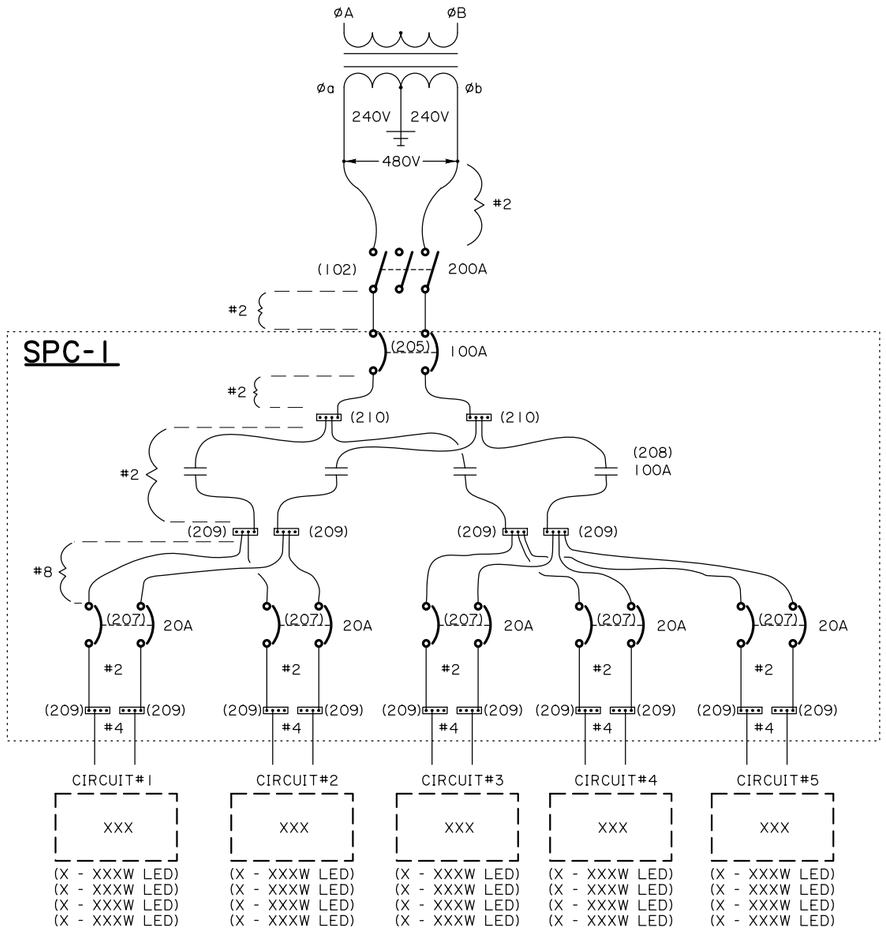

ELECTRICAL SCHEMATIC

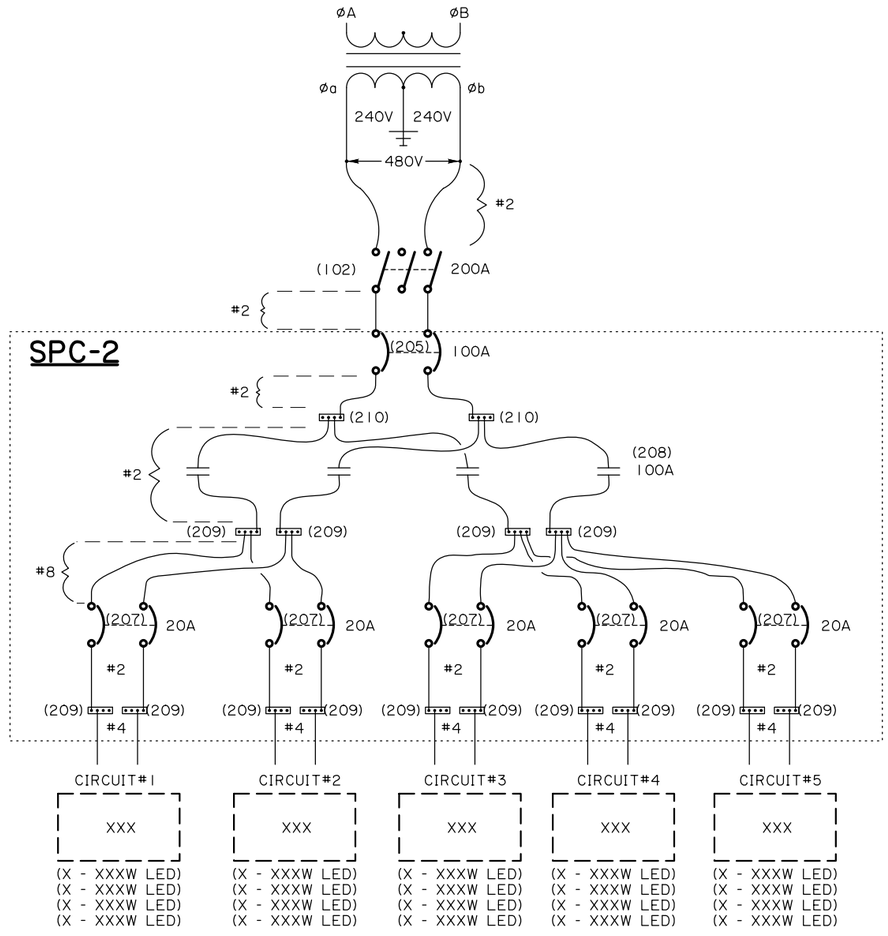

SPECIFIC NOTES:

1. REFER TO PLAN SHEET E31 "DETAIL RL405a" FOR PHOTO-CONTROL WIRING.
2. WIRES SHOWN FEEDING LOADS MAY CHANGE FURTHER INTO WIRE AND CONDUIT SYSTEM. SEE PLAN SHEET E12-E15 FOR CONDUIT AND WIRE SCHEDULES AND ADDITIONAL REQUIREMENTS.
3. ALL SECONDARY POWER CONTROLLER INTERNAL COMPONENTS NOT SHOWN FOR CLARITY. SEE PLAN SHEET E30 "DETAIL RL404d" FOR ADDITIONAL INFORMATION.
4. LOCATION OF TERMINAL BLOCKS MAY NOT BE AS SHOWN. SEE "NOTE #5" ON "DETAIL RL404d" ON PLAN SHEET E30 FOR ADDITIONAL INSTRUCTIONS.
5. GROUND ALL METAL COMPONENT MOUNTING BRACKETS ACCORDING TO THE FOLLOWING:
   CONTACTOR: #8 AWG GREEN GROUND CONDUCTOR CONNECTED TO GROUND BAR.
   PHOTOCONTROL: #12 AWG GREEN GROUND CONDUCTOR CONNECTED TO CONTACTOR GROUNDING CABLE.
   SURGE PROTECTOR: #12 AWG GREEN GROUNDING CONDUCTOR CONNECTED TO PHOTOCONTROL GROUNDING CABLE.

SERVICE POINT DESIGN kVA LOADINGS:

SECONDARY POWER CONTROLLER	AMPERAGE @ 480V / 1ø	kVA @ 480V / 1ø
SPC-1	49.4	23.72
SPC-2	66.3	31.83

✪ NUMBER(S) THAT ARE SHOWN IN PARENTHESES (###) CORRESPOND TO ELECTRICAL EQUIPMENT ITEMS LISTED ON PLAN SHEETS 177 - 181.

SHEET NUMBER	165
PARISH	CALCASIEU
CONTROL SECTION	450-91
STATE PROJECT	H.003931
DESIGN	E. CLAY
CHECK	J. GERHART
DETAIL	E. CLAY
CHECK	J. GERHART
REVIEW	C. LEDET
SERIES	1 OF 4

TECHNICAL PROPOSAL
PRELIMINARY
FOR REVIEW ONLY
ENGINEER: JONATHAN E. GERHART
LICENSE #: 43052
DATE: 4/19/2023

NO.	DATE	REVISION OR CHANGE ORDER DESCRIPTION	BY

ELECTRICAL SCHEMATIC
SPC-1 & SPC-2

I-10 CALCASIEU RIVER BRIDGE P3

LOUISIANA DEPARTMENT OF TRANSPORTATION & DEVELOPMENT

CALCASIEU BRIDGE PARTNERS

E38_Electrical Schematic - 1.dgn

4/19/2023

TECHNICAL PROPOSAL

ELECTRICAL SCHEMATIC

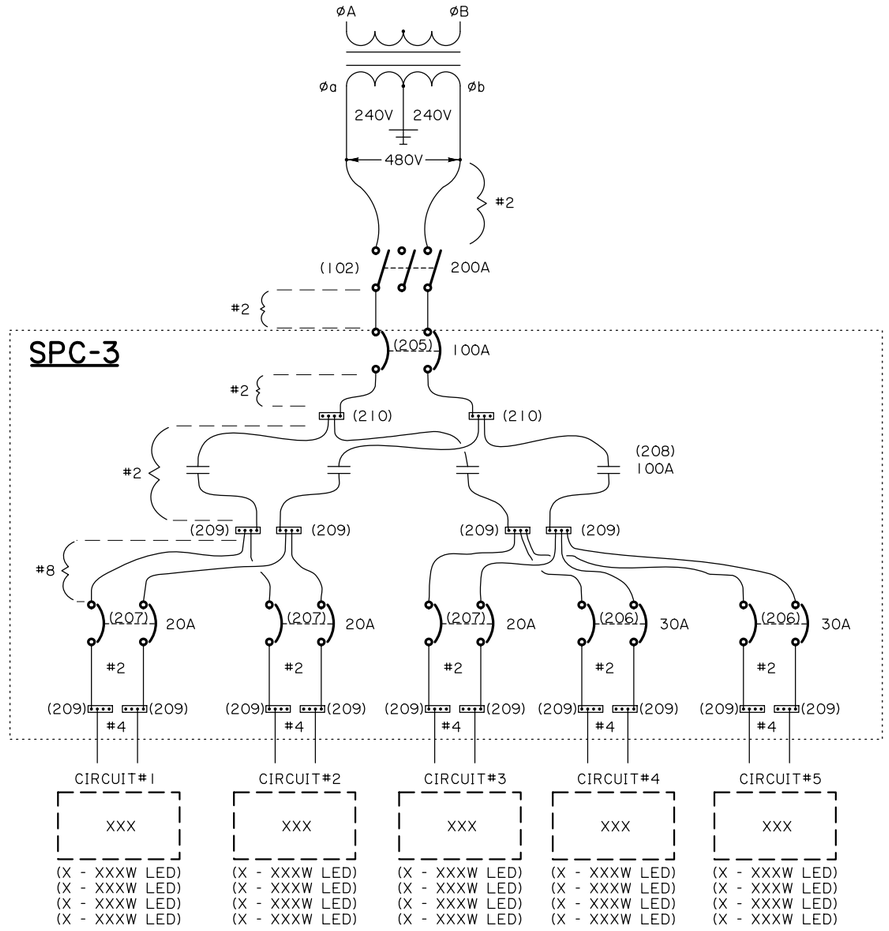

SPC-3

ELECTRICAL SCHEMATIC

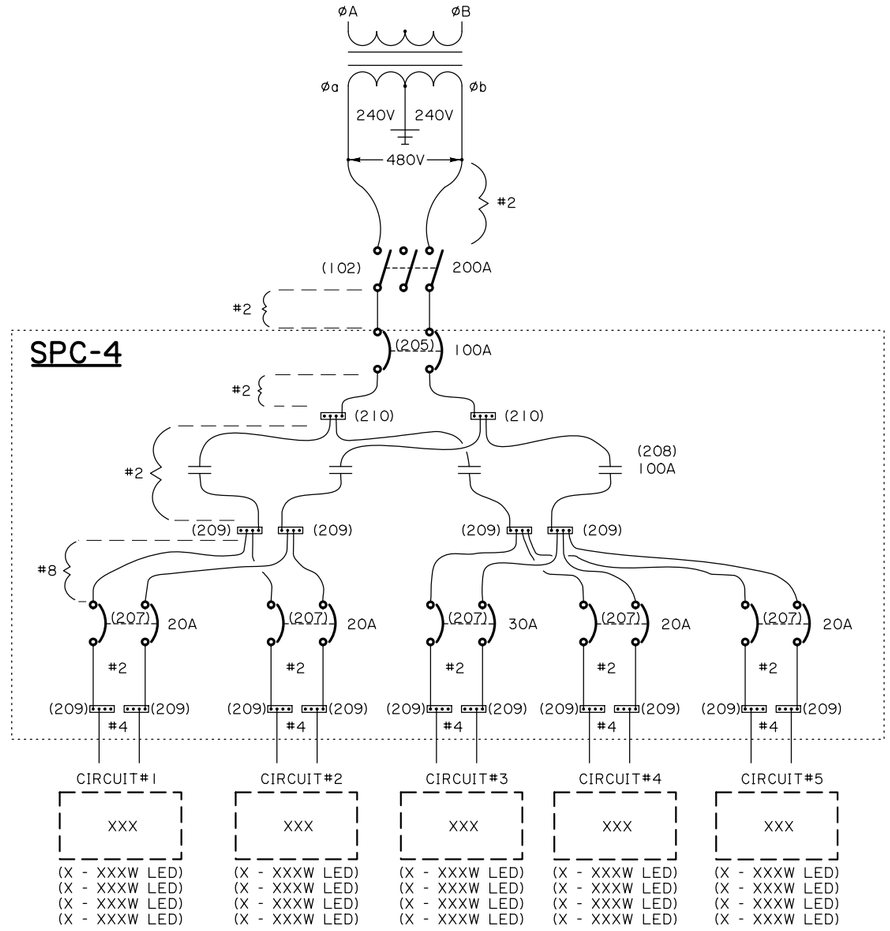

SPC-4

SPECIFIC NOTES:

1. REFER TO PLAN SHEET E31 "DETAIL RL405a" FOR PHOTO-CONTROL WIRING.
2. WIRES SHOWN FEEDING LOADS MAY CHANGE FURTHER INTO WIRE AND CONDUIT SYSTEM. SEE PLAN SHEET E6-E11 FOR CONDUIT AND WIRE SCHEDULES AND ADDITIONAL REQUIREMENTS.
3. ALL SECONDARY POWER CONTROLLER INTERNAL COMPONENTS NOT SHOWN FOR CLARITY. SEE PLAN SHEET E30 "DETAIL RL404d" FOR ADDITIONAL INFORMATION.
4. LOCATION OF TERMINAL BLOCKS MAY NOT BE AS SHOWN. SEE "NOTE #5" ON "DETAIL RL404d" ON PLAN SHEET E30 FOR ADDITIONAL INSTRUCTIONS.
5. GROUND ALL METAL COMPONENT MOUNTING BRACKETS ACCORDING TO THE FOLLOWING:
   CONTACTOR: #8 AWG GREEN GROUND CONDUCTOR CONNECTED TO GROUND BAR.
   PHOTOCONTROL: #12 AWG GREEN GROUND CONDUCTOR CONNECTED TO CONTACTOR GROUNDING CABLE.
   SURGE PROTECTOR: #12 AWG GREEN GROUNDING CONDUCTOR CONNECTED TO PHOTOCONTROL GROUNDING CABLE.

SERVICE POINT DESIGN kVA LOADINGS:

SECONDARY POWER CONTROLLER	AMPERAGE @ 480V / 1ø	kVA @ 480V / 1ø
SPC-3	75.02	36.01
SPC-4	53.92	25.89

✡ NUMBER(S) THAT ARE SHOWN IN PARENTHESES (###) CORRESPOND TO ELECTRICAL EQUIPMENT ITEMS LISTED ON PLAN SHEETS 177 - 181.

E39_Electrical Schematic - 2.dgn

SHEET NUMBER 166

PARISH	CONTROL SECTION	STATE PROJECT
CALCASIEU	450-91	H.003931

DESIGN	CHECK	DETAIL	CHECK	REVIEW	SERIES
E. CLAY	J. GERHART	E. CLAY	J. GERHART	C. LEDET	2 OF 4

TECHNICAL PROPOSAL
PRELIMINARY
FOR REVIEW ONLY
ENGINEER:
JONATHAN E. GERHART
LICENSE #:
43052
DATE:
4/19/2023

NO.	DATE	REVISION OR CHANGE ORDER DESCRIPTION	BY

ELECTRICAL SCHEMATIC
SPC-3 & SPC-4

I-10 CALCASIEU RIVER BRIDGE P3

DOTD LOUISIANA DEPARTMENT OF TRANSPORTATION & DEVELOPMENT

CBP CALCASIEU BRIDGE PARTNERS

4/19/2023

TECHNICAL PROPOSAL

ELECTRICAL SCHEMATIC

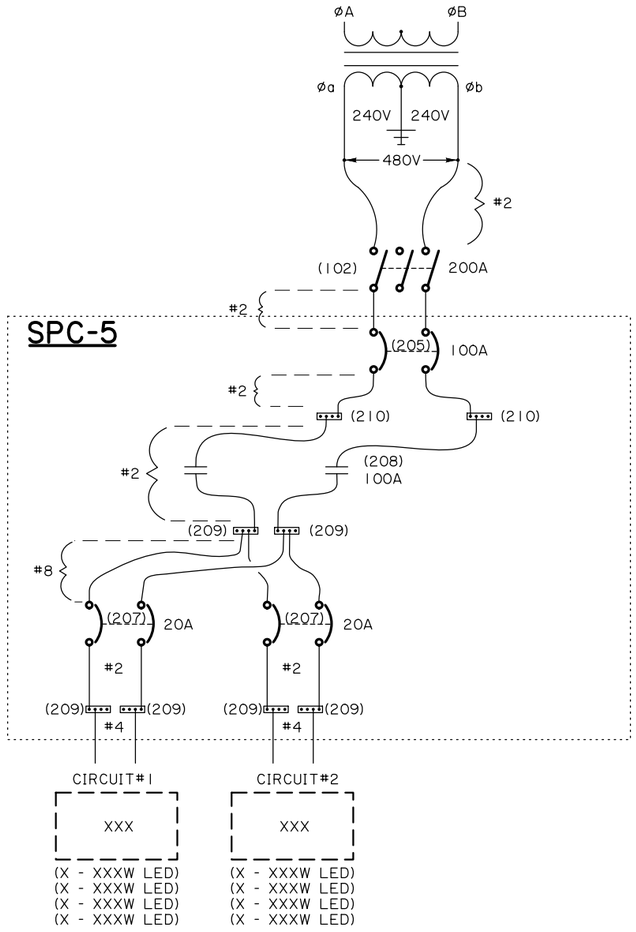

ELECTRICAL SCHEMATIC

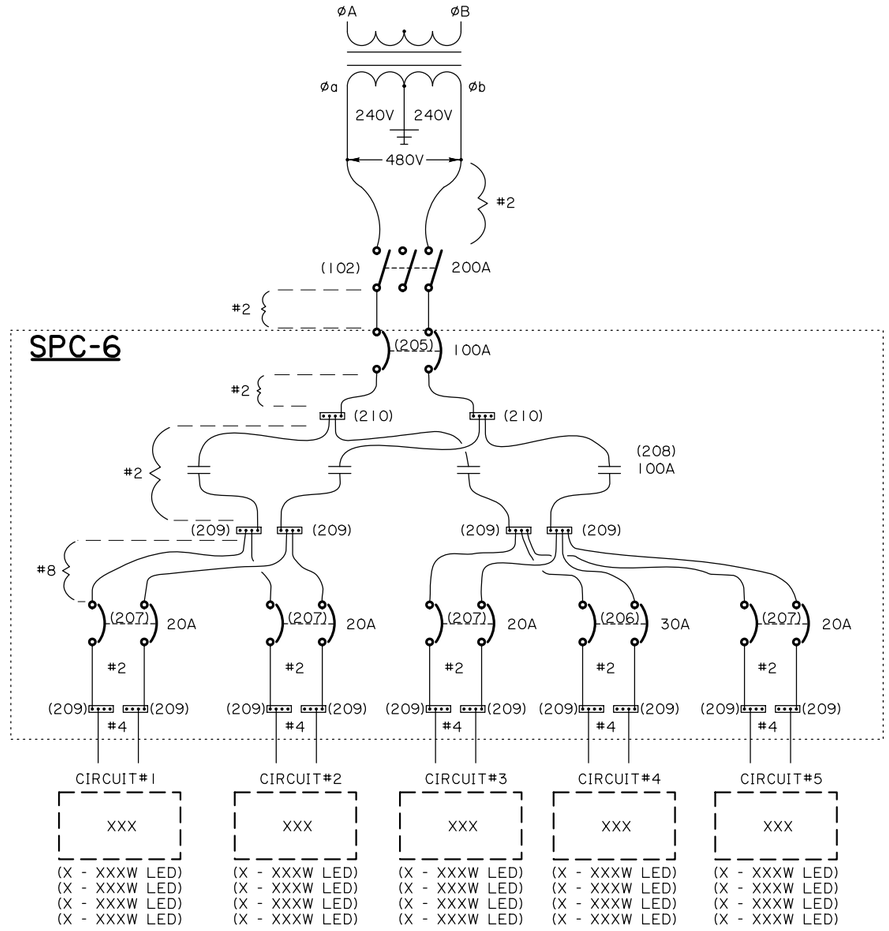

SERVICE POINT DESIGN kVA LOADINGS:

SECONDARY POWER CONTROLLER	AMPERAGE @ 480V / 1ø	kVA @ 480V / 1ø
SPC-5	4.83	2.32
SPC-6	64.51	30.97

SPECIFIC NOTES:

1. REFER TO PLAN SHEET E31 "DETAIL RL405a" FOR PHOTO-CONTROL WIRING.
2. WIRES SHOWN FEEDING LOADS MAY CHANGE FURTHER INTO WIRE AND CONDUIT SYSTEM. SEE PLAN SHEET E6-E11 FOR CONDUIT AND WIRE SCHEDULES AND ADDITIONAL REQUIREMENTS.
3. ALL SECONDARY POWER CONTROLLER INTERNAL COMPONENTS NOT SHOWN FOR CLARITY. SEE PLAN SHEET E30 "DETAIL RL404d" FOR ADDITIONAL INFORMATION.
4. LOCATION OF TERMINAL BLOCKS MAY NOT BE AS SHOWN. SEE "NOTE #5" ON "DETAIL RL404d" ON PLAN SHEET E30 FOR ADDITIONAL INSTRUCTIONS.
5. GROUND ALL METAL COMPONENT MOUNTING BRACKETS ACCORDING TO THE FOLLOWING:
   CONTACTOR: #8 AWG GREEN GROUND CONDUCTOR CONNECTED TO GROUND BAR.
   PHOTOCONTROL: #12 AWG GREEN GROUND CONDUCTOR CONNECTED TO CONTACTOR GROUNDING CABLE.
   SURGE PROTECTOR: #12 AWG GREEN GROUNDING CONDUCTOR CONNECTED TO PHOTOCONTROL GROUNDING CABLE.

✪ NUMBER(S) THAT ARE SHOWN IN PARENTHESES (###) CORRESPOND TO ELECTRICAL EQUIPMENT ITEMS LISTED ON PLAN SHEETS 177 - 181.

E40_Electrical Schematic - 3.dgn

SHEET NUMBER 167

PARISH	CONTROL SECTION	STATE PROJECT
CALCASIEU	450-91	H.003931

DESIGN	CHECK	DETAIL	CHECK	REVIEW	SERIES
E. CLAY	J. GERHART	E. CLAY	J. GERHART	C. LEDET	3 OF 4

TECHNICAL PROPOSAL
PRELIMINARY
FOR REVIEW ONLY
ENGINEER:
JONATHAN E. GERHART
LICENSE #:
43052
DATE:
4/19/2023

NO.	DATE	REVISION OR CHANGE ORDER DESCRIPTION	BY

ELECTRICAL SCHEMATIC
SPC-5 & SPC-6

I-10 CALCASIEU RIVER BRIDGE P3

LOUISIANA DEPARTMENT OF TRANSPORTATION & DEVELOPMENT

CALCASIEU BRIDGE PARTNERS

ELECTRICAL SCHEMATIC

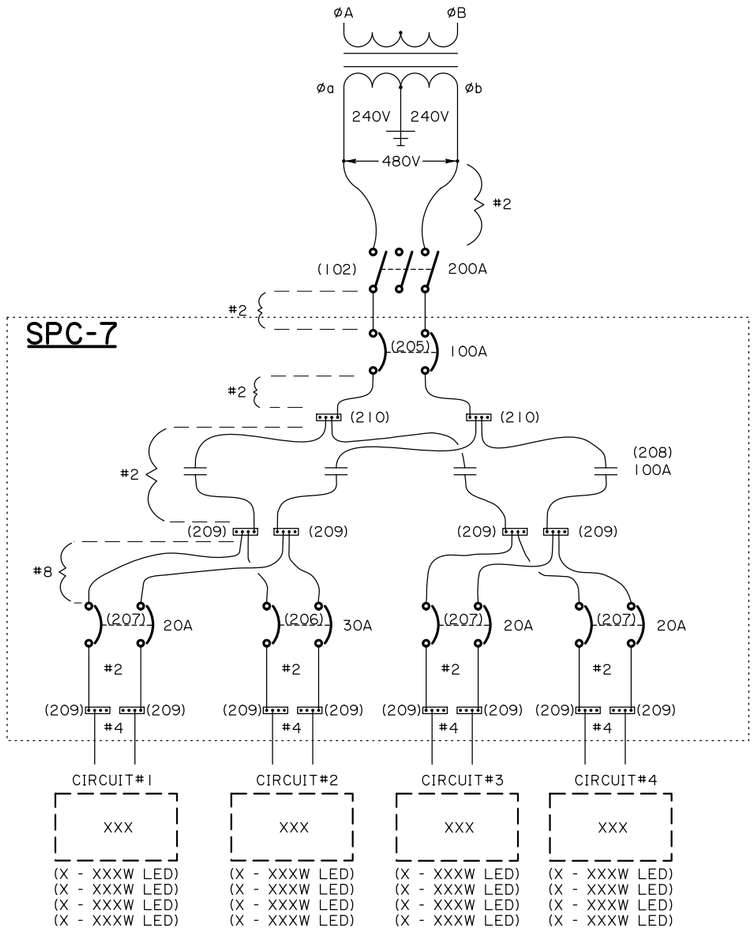

SPECIFIC NOTES:

1. REFER TO PLAN SHEET E31 "DETAIL RL405a" FOR PHOTO-CONTROL WIRING.
2. WIRES SHOWN FEEDING LOADS MAY CHANGE FURTHER INTO WIRE AND CONDUIT SYSTEM. SEE PLAN SHEET E6-E11 FOR CONDUIT AND WIRE SCHEDULES AND ADDITIONAL REQUIREMENTS.
3. ALL SECONDARY POWER CONTROLLER INTERNAL COMPONENTS NOT SHOWN FOR CLARITY. SEE PLAN SHEET E30 "DETAIL RL404d" FOR ADDITIONAL INFORMATION.
4. LOCATION OF TERMINAL BLOCKS MAY NOT BE AS SHOWN. SEE "NOTE #5" ON "DETAIL RL404d" ON PLAN SHEET E30 FOR ADDITIONAL INSTRUCTIONS.
5. GROUND ALL METAL COMPONENT MOUNTING BRACKETS ACCORDING TO THE FOLLOWING:
   CONTACTOR: #8 AWG GREEN GROUND CONDUCTOR CONNECTED TO GROUND BAR.
   PHOTOCONTROL: #12 AWG GREEN GROUND CONDUCTOR CONNECTED TO CONTACTOR GROUNDING CABLE.
   SURGE PROTECTOR: #12 AWG GREEN GROUNDING CONDUCTOR CONNECTED TO PHOTOCONTROL GROUNDING CABLE.

SERVICE POINT DESIGN kVA LOADINGS:

SECONDARY POWER CONTROLLER	AMPERAGE @ 480V / 1ø	kVA @ 480V / 1ø
SPC-7	45.52	21.85

✡ NUMBER(S) THAT ARE SHOWN IN PARENTHESES (###) CORRESPOND TO ELECTRICAL EQUIPMENT ITEMS LISTED ON PLAN SHEETS 177 - 181.

4/19/2023

TECHNICAL PROPOSAL

B41_Electrical Schematic - 4.dgn

SHEET NUMBER 168

PARISH	CONTROL SECTION	STATE PROJECT
CALCASIEU	450-91	H.003931

DESIGN	E. CLAY
CHECK	J. GERHART
DETAIL	E. CLAY
CHECK	J. GERHART
REVIEW	C. LEDET
SERIES	4 OF 4

TECHNICAL PROPOSAL
PRELIMINARY
FOR REVIEW ONLY
ENGINEER:
JONATHAN E. GERHART
LICENSE #:
43052
DATE:
4/19/2023

NO.	DATE	REVISION OR CHANGE ORDER DESCRIPTION	BY

ELECTRICAL SCHEMATIC
SPC-7

I-10 CALCASIEU RIVER BRIDGE P3

LOUISIANA DEPARTMENT OF TRANSPORTATION & DEVELOPMENT

CBP CALCASIEU BRIDGE PARTNERS

TECHNICAL PROPOSAL

4/19/2023

LUMINAIRE LOWERING SYSTEMS NOT REQUIRED. SEE PLAN LAYOUT SHEETS FOR ADDITIONAL LUM. INFORMATION.

POLE AND HARDWARE SHALL CONFORM TO AASHTO-AGC-ARTBA PUBLICATION "A GUIDE TO STANDARDIZED HIGHWAY LIGHTING POLE HARDWARE" - LATEST EDITION (ARTBA TECHNICAL BULLETIN NO. 270) EXCEPT AS NOTED.

POLE DESIGN SHALL BE FOR 100 MPH WIND ZONES IN ACCORD. WITH AASHTO PUBLICATION "STD. SPECIFICATIONS FOR STRUCTURAL SUPPORTS FOR HWY. SIGNS, LUMINAIRES AND TRAFFIC SIG." - LATEST EDITION. POLES SHALL BE ALUMINUM OR GALVANIZED STEEL AND BE EQUIPPED WITH AASHTO APPROVED BREAKAWAY ASSEMBLY.

THREE (3) AWG NO. 12 CONDUCTORS (BLACK, RED, AND GREEN) SHALL BE INSTALLED TO EACH LUMINAIRE TO CONNECTIONS IN BASE (NOTE: WHEN A MOD. BKWY. CBL. SYS. (SEE RL307) IS INSTALLED, A 3-CONDUCTOR SOOW CABLE PROV. BY THE CBL. SYS. MFR. SHALL BE INSTALLED IN LIEU OF SEPARATE CONDUCTORS).

AVOID PLACING POLES BETWEEN 2' AND 12' FROM EDGE OF SHOULDER ON MAIN ROADS HAVING SIDE SLOPES OF 4:1 OR GREATER.

SOME RL DETAILS MAY REFER TO OTHERS.

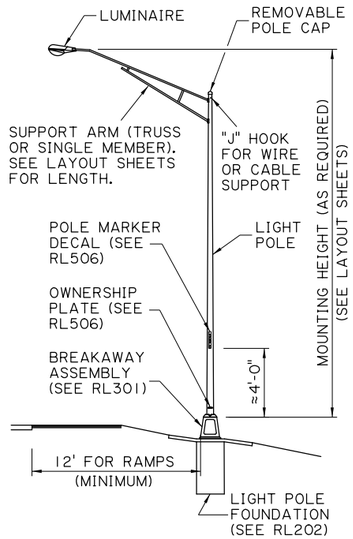

TYPICAL LIGHT POLE INSTALLATION
(SIDE GROUND MOUNTING)

DRAWING NO. RL102 07/11

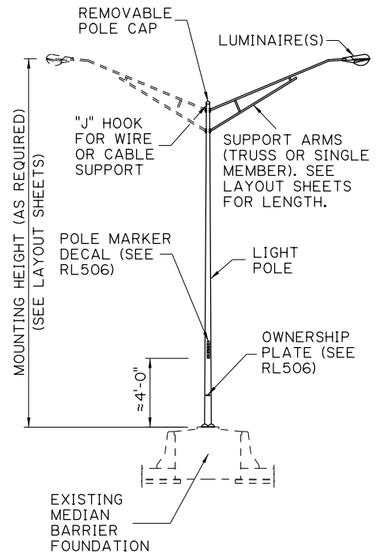

LUMINAIRE LOWERING SYSTEMS NOT REQUIRED. SEE PLAN LAYOUT SHEETS FOR ADDITIONAL LUM. INFORMATION.

POLE AND HARDWARE SHALL CONFORM TO AASHTO-AGC-ARTBA PUBLICATION "A GUIDE TO STANDARDIZED HIGHWAY LIGHTING POLE HARDWARE" - LATEST EDITION (ARTBA TECHNICAL BULLETIN NO. 270) EXCEPT AS NOTED.

POLE DESIGN SHALL BE FOR 100 MPH WIND ZONES IN ACCORD. WITH AASHTO PUBLICATION "STD. SPECIFICATIONS FOR STRUCTURAL SUPPORTS FOR HWY. SIGNS, LUMINAIRES AND TRAFFIC SIG." - LATEST EDITION. POLES SHALL BE ALUMINUM OR GALVANIZED STEEL AND BE EQUIPPED WITH AASHTO APPROVED BREAKAWAY ASSEMBLY.

THREE (3) AWG NO. 12 CONDUCTORS (BLACK, RED, AND GREEN) SHALL BE INSTALLED TO EACH LUMINAIRE TO CONNECTIONS IN BASE.

AVOID PLACING POLES BETWEEN 2' AND 12' FROM EDGE OF SHOULDER ON MAIN ROADS HAVING SIDE SLOPES OF 4:1 OR GREATER.

SOME RL DETAILS MAY REFER TO OTHERS.

TYPICAL LIGHT POLE INSTALLATION
(MEDIAN BARRIER MOUNTING - NO BREAKAWAY ASSEMBLY)

DRAWING NO. RL107c 04/09

1. CAST ALUMINUM HOUSING.
2. BOROSILICATE REFRACTOR, SEALED & GASKETED
3. PORCELAIN LAMP SOCKET
4. H.P.S. LAMP (SEE SPECIFICATIONS ON PLANS)
5. SIDE ENTRY 2" ø PIPE BRACKET W/2-BOLT CLAMP
6. SAFETY CHAIN (NOT SHOWN)
7. BALLAST TRAY (EASY REMOVAL & HEAT DISSIPATION)
8. EXTERNAL CLAMPING BAND W/HARDWARE
9. FUSE BLOCK INSIDE LOWER RING J-BOX (NOT SHOWN)

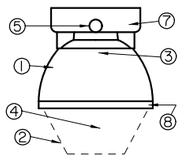

-LIGHTING ARRESTORS: 2 POLE 650 VAC SILICON CARBIDE VALVE BLOCK TYPE W/60 CYCLE (MAX.) SPARKOVER OF 1.4kV (RMS) AND 4kV (MAX.) DISCHARGE VOLTAGE @ 20kA, AND 5 NANOSECOND (MAX) RESPONSE TIME. LOCATED ON TOP OF LOWERING RING MOUNTED J-BOX. (REQ'D BY LOWERING DEVICE MANUFACTURER, NOT CONTRACTOR)

-BALLAST & IGNITER: CONSTANT WATTAGE AUTO-REGULATING W/10% LINE VOLTAGE VARIATION. BALLAST SHALL BE EASILY REMOVED W/O REMOVAL OF RING FIXTURE & SHALL GIVE WATTAGE REGULATION AS PRESCRIBED BY ANSI FOR RATED LIFE OF LAMP. IGNITOR & BALLAST SHALL BE SUITABLE FOR 800 HR'S CONT. OPER. IN 90°C AMBIENT W/LAMP LEADS OPEN OR SHORTED. INCLUDE PROTECTED STARTER/IGNITER OPTION.

-PHOTOMETRIC PERFORMANCE: (BASED ON MT. HEIGHT, # LUMINAIRES, AND L.L.F.= 0.7) MIN. MAINTAINED HORIZONTAL ILLUMINANCE ON ROADWAY SHALL BE 0.3 F.C. THE CONTRACTOR SHALL SUBMIT PHOTOMETRIC REPORTS & DWGS INDICATING F.C. LEVELS ON THE SUBJECT ROADWAY SYSTEM.

NOTE: 1) ALL HARDWARE FOR LUMINAIRE & LUMINAIRE MOUNTING SHALL BE MARINE DUTY STAINLESS STEEL WITH MINIMUM YIELD STRENGTH OF 30000 PSI.
2) SEE PLANS & CONSTRUCTION PROPOSAL FOR ADDITIONAL SPECS. & INFO.
3) SUBMIT EQUIP. BROCHURE(S), VIBRATION & PHOTOMETRIC DATA FOR APPROV.

TYPICAL HIGH MAST LUMINAIRE

DRAWING NO. RL199 01/22

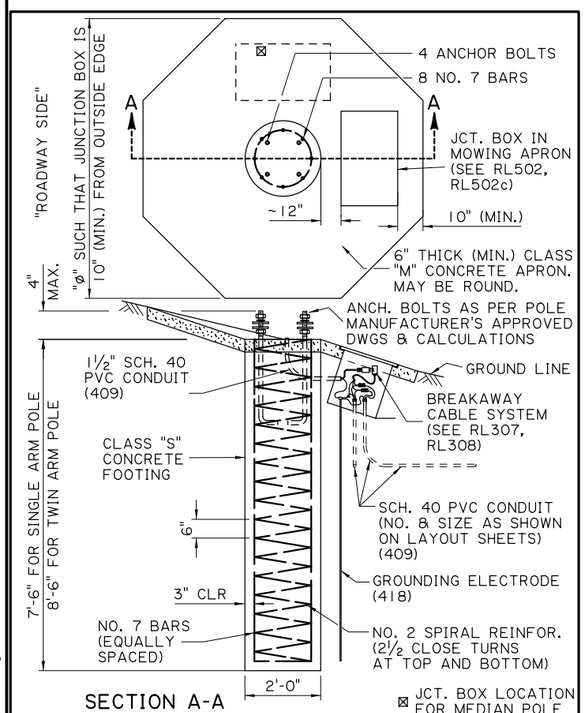

TYPICAL LIGHT POLE FOUNDATION
(WITH JUNCTION BOX IN APRON; ON SLOPE)

DRAWING NO. RL202 02/23

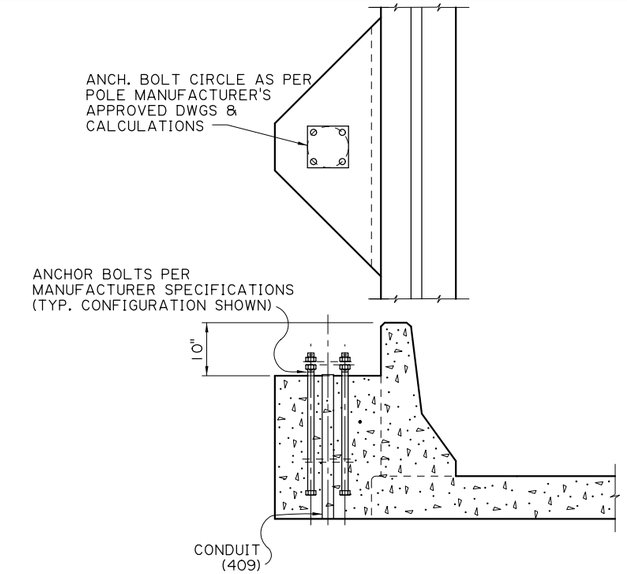

TYP. BARRIER RAIL MOUNT FOR LIGHT POLE
(FOR INCLUSION ON BRIDGE CONSTRUCTION)

DRAWING NO. RL204 10/07

NOTES:
1) SEE BRIDGE PLANS (PLAN SHEET NO. XXX) FOR ADDITIONAL CONSTRUCTION DETAILS AND ASSOCIATED PAY ITEMS REQUIRED FOR THE LIGHT POLE FOUNDATION.

2) CONCRETE LIGHT POLE FOUNDATION SHALL NOT BE CONSTRUCTED UNTIL LIGHT POLE AND ANCHOR BOLT DETAILS HAVE BEEN SUBMITTED, AND STAMPED AND DISTRIBUTED AS "NO EXCEPTIONS TAKEN". ELECTRICAL SUB-CONTRACTOR SHALL PROVIDE THESE SUBMITTALS TO THE GENERAL CONTRACTOR AND COORDINATE ACCORDINGLY TO ENSURE PROPER CONSTRUCTION OF THE LIGHT POLE FOUNDATION.

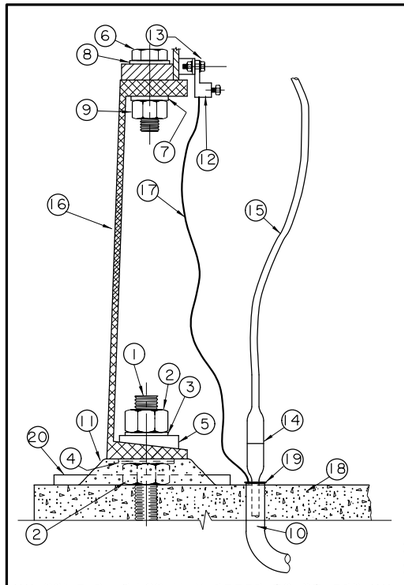

** SOME RL DWGS MAY REFER TO OTHERS **

1. 4 ANCHOR BOLTS
2. 8 ANCHOR BOLT HEX NUTS
3. 4 ANCHOR BOLT LOCK WASHERS
4. 4 ANCHOR BOLT FLAT WASHERS
5. 4 ANCHOR BOLT HOLD DOWN WASHERS
6. 4 HEX HEAD BASE BOLTS
7. 4 BASE BOLT LOCK WASHERS
8. 4 BASE BOLT FLAT WASHERS
9. 4 BASE BOLT HEX NUTS
10. 1½" DIA. SCH. 40 PVC CONDUIT TO JUNCTION BOX (SEE RL307)
11. NONSHRINK GROUT
12. POLE GROUND LUG (EQ. TO OZ/ GEDNEY-NEER OR THOMAS & BETTS)
13. S.S. HEX BOLT, NUTS, & WASHERS
14. BKWY. CABLE SYS. (SEE RL307)
15. LUMINAIRE CABLE (SEE RL307) (SECURE CABLE TO POLE)
16. BKWY. TRANS. BASE CONFORMING TO "STD. SPECS. FOR STRUCTURAL SUPPORTS FOR HWY. SIGNS, LUM., AND TRAFFIC SIGNALS" - LATEST EDITION. FHWA APPROVAL REQ'D.
17. POLE GROUNDING CONDUCTOR
18. CONCRETE FOUNDATION
19. CABLE RESTRAINT (SEE RL307)
20. DRAIN PIPE

TYPICAL BREAKAWAY TRANSFORMER BASE AND LIGHT POLE CONNECTIONS

DRAWING NO. RL301 04/10

✡ NUMBER(S) THAT ARE SHOWN IN PARENTHESES (###) CORRESPOND TO ELECTRICAL EQUIPMENT ITEMS LISTED ON PLAN SHEETS 177 - 181.

SHEET NUMBER 169

PARISH	CONTROL SECTION	STATE PROJECT
CALCASIEU	450-91	H.003931

DESIGN	DETAIL	REVIEW	SERIES
E. CLAY	E. CLAY	C. LEDET	1 OF 6
CHECK	CHECK		
J. GERHART	J. GERHART		

TECHNICAL PROPOSAL
PRELIMINARY
FOR REVIEW ONLY
ENGINEER: JONATHAN E. GERHART
LICENSE #: 43052
DATE: 4/19/2023

NO.	DATE	REVISION OR CHANGE ORDER DESCRIPTION	BY

ELECTRICAL DETAILS

I-10 CALCASIEU RIVER BRIDGE P3

LOUISIANA DEPARTMENT OF TRANSPORTATION & DEVELOPMENT

CALCASIEU BRIDGE PARTNERS

E42_Electrical Details-1.dgn

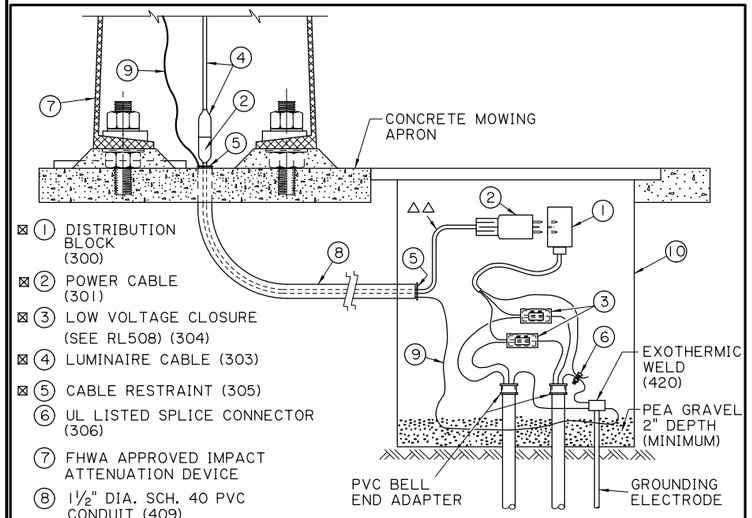

⊠ (1) DISTRIBUTION BLOCK (300)
⊠ (2) POWER CABLE (301)
⊠ (3) LOW VOLTAGE CLOSURE (SEE RL508) (304)
⊠ (4) LUMINAIRE CABLE (303)
⊠ (5) CABLE RESTRAINT (305)
(6) UL LISTED SPLICE CONNECTOR (306)
(7) FHWA APPROVED IMPACT ATTENUATION DEVICE
(8) 1½" DIA. SCH. 40 PVC CONDUIT (409)
(9) POLE GRDG. CONDUCTOR
(10) UNDERGROUND JUNCTION BOX JB-1 (SEE RL502b) (308)

⊠ ITEMS SUPPLIED AS A UNIT BY THE SAME MANUFACTURER

△△ PULL ALL SLACK INTO JUNCTION BOX BEFORE INSTALLING CABLE RESTRAINT
* (SEE RL308 FOR CABLE SYSTEM SPECS)
* SOME RL DWGS MAY REFER TO OTHERS

MODULAR BREAKAWAY CABLE SYSTEM
(TYPICAL; LOW MAST)

DRAWING NO. RL307 07/16

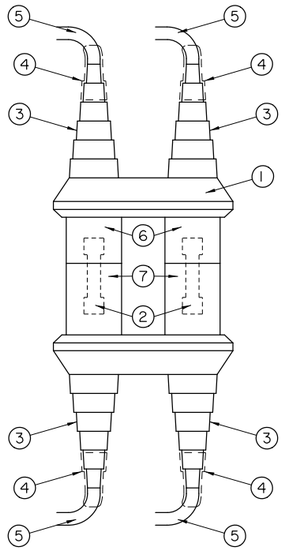

(1) FUSE CONNECTOR (426)
(2) FUSE (426a)
(3) WEATHERPROOF INSULATING BOOT (426)
(4) TAPE SEALANT (423)
(5) CONDUCTOR (SEE PLAN LAYOUT SHEETS FOR SIZE AND TYPE. NOTE: CONDUCTOR SIZE SHALL NOT EXCEED MANUFACTURERS RECOMMENDATIONS FOR DEVICE.) (414)
(6) LOAD SIDE PLUG
(7) LINE SIDE RECEPTACLE

FUSE CONNECTOR FOR NON-BREAKAWAY POLES
(TYPICAL)

DRAWING NO. RL307b 02/06

MODULAR BREAKAWAY CABLE SYSTEM

A MODULAR COLOR-CODED CABLE SYSTEM CONSISTING OF RUBBER CORDS W/ INTEGRAL MOLDED WATERTIGHT SUBMERSIBLE CONNECTORS, FUSES, SUBMERSIBLE SPLICE CONNECTORS, AND CABLE RESTRAINTS SHALL BE INSTALLED IN THE JUNCTION BOX IN THE POLE BASE MOWING PAD. THE SYSTEM SHALL PROVIDE POWER FROM THE JUNCTION BOX TO THE LUMINAIRE(S). CABLES SHALL EXTEND FROM THE JUNCTION BOX AT THE POLE BASE TO LUMINAIRE(S) AT THE TOP OF POLE. ONE (1) SUCH SYSTEM SHALL BE INSTALLED AT EACH GROUND-MOUNTED BREAKAWAY POLE INSTALLATION. POLE CABLE SYSTEM SHALL CONSIST OF THE FOLLOWING MINIMUM COMPONENTS:

DISTRIBUTION BLOCK

DISTRIBUTION BLOCK SHALL CONTAIN A 3-WIRE FEMALE OUTLET INTEGRALLY MOLDED TO A 2' (MIN.) LENGTH OF 3 SEPARATE #10 DLO CABLES. BLOCK SHALL BE WATERTIGHT AND SUBMERSIBLE WHEN THE INTEGRAL FUSED PLUG ON THE POWER CABLE IS ENGAGED AND FULLY SEATED. DIMENSIONS SHALL BE APPROXIMATELY 2¼"X3"X3". DIMENSIONS ARE CRITICAL DUE TO LIMITED SPACE IN THE JUNCTION BOX.

POWER CABLE

CABLE SHALL BE AN 11' (MIN.) 14/3 SOWA CABLE WITH MOLDED RED MALE FUSED PLUG ON ONE (1) END AND MOLDED ORANGE FEMALE CONNECTOR ON THE OTHER END. MALE PLUG SHALL CONTAIN 2 FUSES THAT ARE PROVIDED BY CABLE SYSTEM MANUFACTURER. FUSES SHALL HAVE AMPACITY AS FOLLOWS: 5 AMP FOR SINGLE LUMINAIRE; 10 AMP FOR TWIN LUMINAIRE. MALE PLUG SHALL PROVIDE A WATERTIGHT SUBMERSIBLE SEAL WHEN MATED TO DISTRIBUTION BLOCK. FEMALE CONNECTOR SHALL PASS THROUGH A STANDARD 1½" SCHEDULE 40 PVC CONDUIT OR LFNC-B (WHERE SPECIFIED). CONTRACTOR SHALL INSTALL RETAINING STRAPS AT EACH END OF CONDUIT TO PREVENT MOVEMENT AND FORCE DISCONNECTON UPON POLE BREAKAWAY.

LUMINAIRE CABLE

CABLE SHALL BE A VARIABLE LENGTH 14/3 SOWA CABLE WITH MALE PLUG MOLDED IN ORANGE TO MATCH ORANGE END OF POWER CABLE. CONNECTOR SHALL REQUIRE A 25 LB. (MAX.) FORCE TO MATE OR DISENGAGE FROM FEMALE END. WHEN ENGAGED, CONNECTION SHALL BE WATERTIGHT AND SUBMERSIBLE.

DISTRIBUTION BLOCK AND CONNECTORS SHALL BE FABRICATED OF THERMOSETTING SYNTHETIC POLYMER, NON-FLAME SUPPORTING, AND SHALL REMAIN FLEXIBLE OVER A TEMPERATURE RANGE OF -40°F TO 190°F.

MODULAR BREAKAWAY CABLE SYSTEM
(TYPICAL; LOW MAST)

DRAWING NO. RL308 03/12

(1) REQUIRE: CENTERTAP TRANSFORMER (480/240V) FROM UTILITY CO.

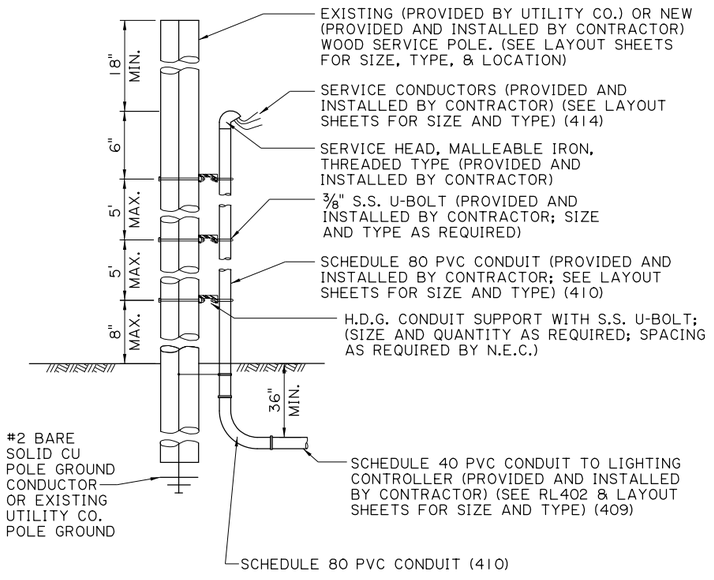

NOTE: THE CONTRACTOR SHALL OBTAIN APPROVAL FROM THE UTILITY COMPANY AND PROJECT ENGINEER PRIOR TO SERVICE INSTALLATION(S).

ELECTRICAL SERVICE POLE INSTALLATION
(TYPICAL; UN-METERED ELECTRICAL SERVICE FROM UTILITY COMPANY)

DRAWING NO. RL401 05/06

NOTES:
1. CONTRACTOR TO REMOVE 1'-0" (MIN.) OF SOIL FROM FNDN. AREA & BACKFILL W/COMPACTED MATERIAL AS PER LADOTD STD. SPECIFICATIONS.
2. CLASS "A" CONCRETE.
3. STEEL TUBE: (200)
4. 1⅝" UNISTRUT: (200a) INSTALL ADD'L UNISTRUT AS REQ'D.
5. SEE DETAIL RL407 FOR ADDITIONAL SPECS.
6. ELE. SERV. FEED FROM ELE. UTIL. CO. SEE PLANS FOR CONDUIT & WIRE INFO.
7. ELE. SERV. TO LTG. LOADS. SEE PLANS FOR CONDUIT & WIRE INFO. (# OF CONDUITS MAY VARY)
8. SUPPORT STRUCTURE TO BE ORIENTED SO THAT THE PHOTO CONTROL IS FACING NORTH.

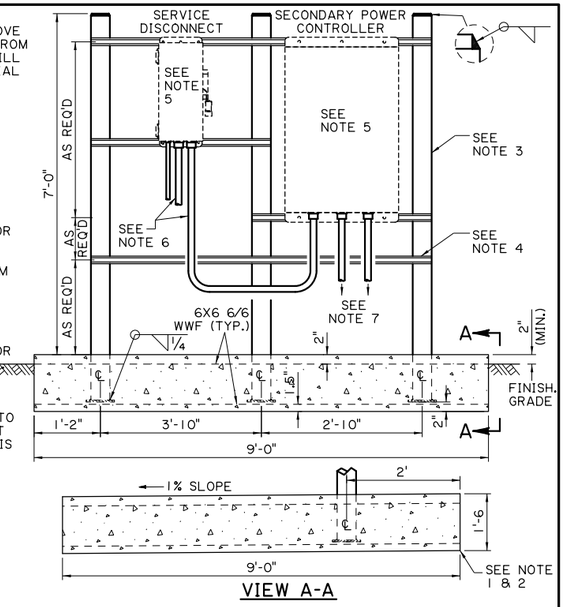

VIEW A-A

* REFER TO OTHER "RL DETAILS" FOR ADDITIONAL REQUIREMENTS.

SUPPORT STRUCTURE
(SERVICE DISCONNECT AND SECONDARY POWER CONTROLLER)

DRAWING NO. RL403 10/09

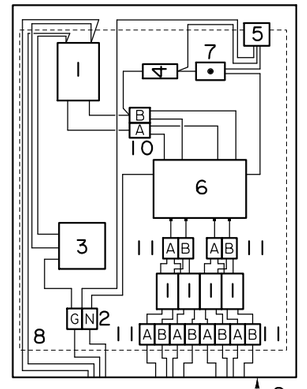

1. CIRCUIT BREAKERS; (205-207, 224)
2. POWER DISTRIBUTION BLOCK (SMALL); (210)
3. SURGE ARRESTOR; (211)
4. CONTROL CIRCUIT FUSE & FUSEHOLDER; (212, 213)
5. PHOTO-ELECTRIC CONTROL; (214, 215)
6. LIGHTING CONTACTOR; (208)
7. HAND-OFF-AUTOMATIC SWITCH & SEALING BOOT; (216-218)
8. MOUNTING PLATE; (204)
9. CABINET; (201-203)
10. INSULATED POWER BAR; (209)
11. INSULATED POWER BAR; (223)

LEGEND
A - PHASE A
B - PHASE B
G - GROUND
N - NEUTRAL

NOTES:
1. STAINLESS STEEL HARDWARE SHALL BE AS SPECIFIED UNDER PARAGRAPH E ON PLAN SHEET E4.
2. ALLOW 2" (MIN.) CLEARANCE BTWN. COMPONENTS; 4" (MIN.) CLEARANCE ON ALL SIDES.
3. REFER TO OTHER ELEC. DETAILS AND EQUIPMENT LISTS FOR ADDITIONAL INFORMATION AND/OR SPECIFICATIONS.
4. ALL CONTROL PANEL WIRING SHALL BE NEATLY BUNDLED AND SECURED TO MOUNTING PLATE USING SUITABLE CABLE CLAMP (222). CABLE CLAMPS NOT SHOWN.
5. PRIOR TO CONNECTING, FINAL LAYOUT OF ELEC. COMPONENTS ON MOUNTING PLATE SUBJECT TO APPROVAL BY DESIGN ENGINEER.

LIGHTING CONTROLLER LAYOUT
(TYPICAL; STRUCTURE MOUNT W/ HAND-OFF-AUTOMATIC CONTROL SWITCH)

DRAWING NO. RL404d 01/22

✡ NUMBER(S) THAT ARE SHOWN IN PARENTHESES (###) CORRESPOND TO ELECTRICAL EQUIPMENT ITEMS LISTED ON PLAN SHEETS 177 - 181.

SHEET NUMBER 170

PARISH	CONTROL SECTION	STATE PROJECT
CALCASIEU	450-91	H.003931

DESIGN	CHECK	DETAIL	CHECK	REVIEW	SERIES
E. CLAY	J. GERHART	E. CLAY	J. GERHART	C. LEDET	2 OF 6

TECHNICAL PROPOSAL
PRELIMINARY
FOR REVIEW ONLY
ENGINEER: JONATHAN E. GERHART
LICENSE #: 43052
DATE: 4/19/2023

NO.	DATE	REVISION OR CHANGE ORDER DESCRIPTION	BY

ELECTRICAL DETAILS

I-10 CALCASIEU RIVER BRIDGE P3

DOTD LOUISIANA DEPARTMENT OF TRANSPORTATION & DEVELOPMENT

CBP CALCASIEU BRIDGE PARTNERS

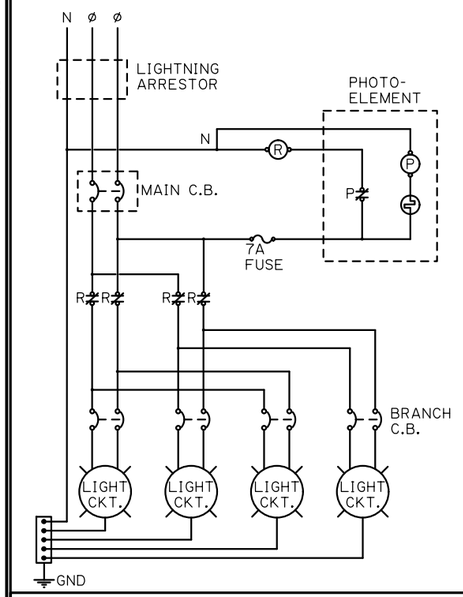

NOTES:

1. SERVICE: 240/480 VOLT, GROUNDED, 1 ø, 60 HZ.
2. WIRING SCHEMATIC SHOWN IS A GENERAL WIRING LAYOUT. NUMBER OF CIRCUIT BREAKERS AND RELAY CONTACTS MAY VARY.
3. CONTRACTOR SHALL OBTAIN APPROVAL FROM UTILITY CO. BEFORE INSTALLATION.
4. REFER TO OTHER ELEC. DETAILS FOR ADDITIONAL INFORMATION AND/OR SPECIFICATIONS.

* SCHEMATIC SHOWN AT NIGHT WITH LIGHTS ON.

LIGHTING CONTROLLER SCHEMATIC
(TYPICAL; NO UTILITY METERING)

DRAWING NO. RL405a 12/09

DUCT MARKER (400) (EACH END)

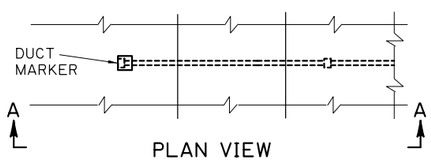

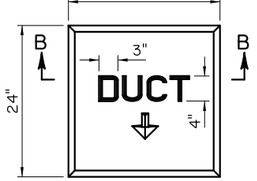

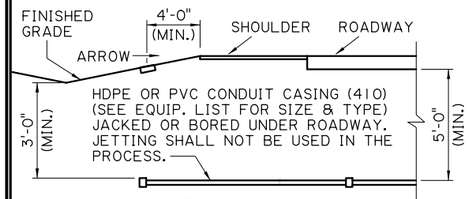

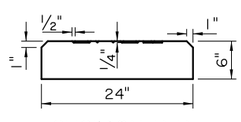

THE ENDS ABOVE OF ALL ROADWAY DUCT CROSSINGS SHALL BE MARKED WITH A CONCRETE OR POLY. CONCRETE SLAB 6" THICK BY 2 FEET SQUARE, WITH 1" BEVELED EDGES, AND 4" HIGH BY 3" WIDE LETTERS HAVING ½" WIDE BY ¼" DEEP STROKE (OR AS LARGE AS THE AVAILABLE SPACE PERMITS). THE MARKER SLAB SHALL EXTEND APPROX. ½" ABOVE FINISHED GRADE. THE WORD "DUCT", THE NUMBER OF DUCTS BENEATH THE MARKER, THE SIZE OF EACH DUCT, AND AN ARROW INDICATING THE DIRECTION OF EACH DUCT SHALL BE IMPRESSED ON THE SURFACE OF EACH MARKER SLAB. INSTALL THE SLAB WITH THE ARROW PARALLEL AND IN THE DIRECTION OF ROADWAY DUCT CROSSING AS SHOWN ABOVE. A SUBMITTAL IS REQUIRED FOR APPROVAL PRIOR TO INSTALLATION.

UNDER ROAD CROSSING AND DUCT MARKER
(TYPICAL) (400, 410)

DRAWING NO. RL501 12/09

CIRCUIT SCHEDULE

SERVICE PT. NO.	#CKTS/ S.P.	MAIN BKR. TRIP	CIRCUIT BKR. TRIP CKT.1	CKT.2	CKT.3	CKT.4	CONTACTOR NO. CONT.	CONT. RATING	CONDUCTORS SERVICE
SPC-1	5	100	20	20	20	20	4	100	#2
			CKT.5	CKT.6					
			20	---					
SPC-2	5	100	20	20	20	20	4	100	#2
			CKT.5	CKT.6					
			20	---					
SPC-3	5	100	20	20	20	30	4	100	#2
			CKT.5	CKT.6					
			30	---					
SPC-4	5	100	20	20	30	20	4	100	#2
			CKT.5	CKT.6					
			20	---					
SPC-5	2	100	20	20	---	---	4	100	#2
			CKT.5	CKT.6					
			---	---					
SPC-6	5	100	20	20	20	30	4	100	#2
			CKT.5	CKT.6					
			30	---					
SPC-7	4	100	20	30	20	20	4	100	#2
			CKT.5	CKT.6					
			---	---					

NOTES: 1. CONDUCTORS FROM MAIN BREAKER TO CONTACTOR ARE TO BE THE SAME SIZE AS THE SERVICE CONDUCTORS.
2. CONDUCTORS FROM CONTACTOR TO BRANCH BREAKERS NEED NOT HAVE A GREATER AMPACITY THAN THE BRANCH BREAKER TRIP AMPS.
3. SEE PLANS AND RL DETAILS FOR ADDITIONAL INFORMATION.
4. S.P. = SERVICE POINT.

LIGHTING CONTROLLER CIRCUIT SCHEDULE
(TYPICAL)

DRAWING NO. RL406 08/22

NOTES;
1. FOR LABEL "L1", "L2", & "L3" SEE DETAIL RL805 & RL 807. FOR ADDITIONAL REQUIREMENTS. ACTUAL LABEL LOCATIONS MAY VARY.
2. UNIV. DRAIN/BREATH: (220) THREADED HUB & REDUCER BUSHING: (221)
3. CABINET ENCLOSURE: (201)
4. SAFETY SWITCH: (102)
5. TEE VENT: (219) CENTER VENT ON TOP OF CABINET ENCLOSURE.
6. ENCLOSURE LOCK & KEY: (202-203)

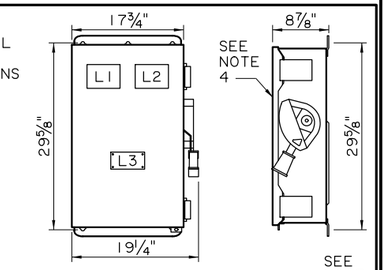

* REFER TO OTHER "RL DETAILS" FOR ADDITIONAL REQUIREMENTS.

ELECTRICAL SERVICE EQUIPMENT
(SERVICE DISCONNECT AND SECONDARY POWER CONTROLLER)

DRAWING NO. RL407 12/09

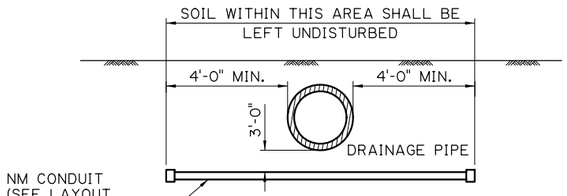

WHERE TOP OF DRAINAGE PIPE IS 3'-0" OR GREATER BELOW GROUND LINE, CONDUIT SHALL CROSS OVER DRAINAGE PIPE.

DRAINAGE PIPE CROSSING
(TYPICAL)

DRAWING NO. RL501a 08/05

✡ NUMBER(S) THAT ARE SHOWN IN PARENTHESES (###) CORRESPOND TO ELECTRICAL EQUIPMENT ITEMS LISTED ON PLAN SHEETS 177 - 181.

SHEET NUMBER 171

PARISH	CONTROL SECTION	STATE PROJECT
CALCASIEU	450-91	H.003931

	DESIGN	CHECK	DETAIL	CHECK	REVIEW	SERIES
	E. CLAY	J. GERHART	E. CLAY	J. GERHART	C. LEDET	3 OF 6

TECHNICAL PROPOSAL
PRELIMINARY
FOR REVIEW ONLY
ENGINEER: JONATHAN E. GERHART
LICENSE #: 43052
DATE: 4/19/2023

NO.	DATE	REVISION OR CHANGE ORDER DESCRIPTION	BY

ELECTRICAL DETAILS

I-10 CALCASIEU RIVER BRIDGE P3

DOTD LOUISIANA DEPARTMENT OF TRANSPORTATION & DEVELOPMENT

CBP CALCASIEU BRIDGE PARTNERS

4/19/2023

* WHEN SPLICES IN CONDUCTORS ARE REQUIRED, SEE RL508

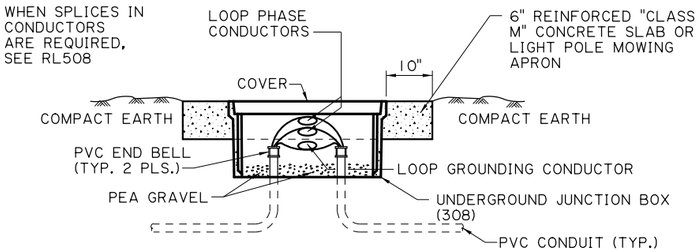

NOTE: CONTRACTOR SHALL INSTALL CONDUITS AT AN APPROPRIATE DEPTH (≥3'-0") TO ACHIEVE REQUIRED VERTICAL ALIGNMENT OF CONDUITS INTO JUNCTION BOX.

UNDERGROUND JUNCTION BOX:
JUNCTION BOX SHALL BE FABRICATED FROM FIBERGLASS REINFORCED POLYMER CONCRETE HAVING U.V. STABILIZED GREEN, BLACK, OR GREY COLOR. BOX SHALL BE INSTALLED IN A 6" THICK CONCRETE PAD UNLESS SHOWN OTHERWISE ON THE PLANS. BOX AND COVER SHALL BE DESIGNED FOR USE IN ROADWAY APPLICATIONS AND BE HEAVY DUTY RATED 150 PSI OVER A 10"X10" AREA (MINIMUM). ALL BOX AND COVER HARDWARE SHALL BE MARINE DUTY STAINLESS STEEL WITH A MINIMUM 30,000 P.S.I. YIELD STRENGTH. BOX COVER SHALL BE FABRICATED FROM FIBERGLASS REINFORCED POLYMER CONCRETE AND SHALL ALSO INCLUDE STANDARD "LIGHTING" LOGO. UNLESS NOTED OTHERWISE, BOX SHALL HAVE INTERIOR DIMENSIONS 12"(LENGTH) X 12"(WIDTH) X 10"(DEPTH), WITH DEPTH MEASURED FROM BOTTOM OF COVER TO BOTTOM OF BOX WHILE COVER IS INSTALLED. BOX AND COVER SHALL COMPLY WITH THREE (3) POSITION TESTING AS REQUIRED BY UNDERWRITER LABORATORIES (U.L.) OR WESTERN UNDERGROUND COMMITTEE (W.U.C.), GUIDELINE 3.6. FOR EQUIPMENT NOT U.L. OR W.U.C. 3.6 COMPLIANT, PROOF OF EQUIVALENT TESTING SHALL BE SUPPLIED BY A REGISTERED PROFESSIONAL ENGINEER. ALL DIMENSIONS ARE MINIMUM.

UNDERGROUND JUNCTION BOX
(TYPICAL; WITH FIBERGLASS REINFORCED POLYMER CONCRETE COVER)

DRAWING NO. RL502 04/10

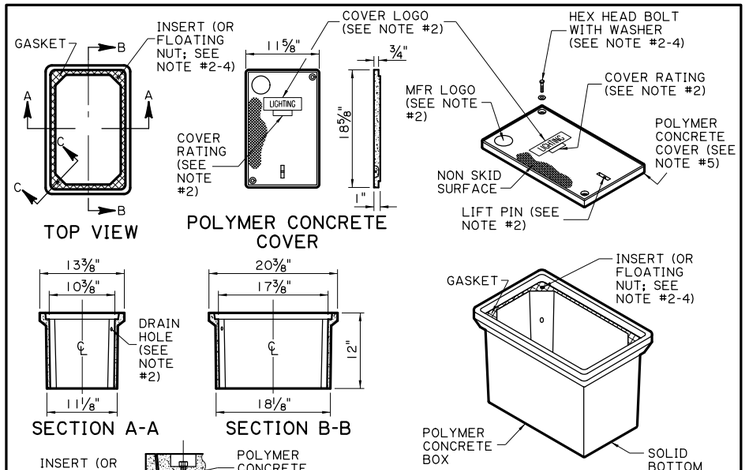

NOTE:
1. DIMENSIONS SHOWN ARE APPROXIMATE.
2. LOCATION, SIZE, AND QTY. OF MFR. HARDWARE, LIFT PINS, DRAIN HOLES, LOGO, COVER RATING, ETC. MAY VARY.
3. ALL HARDWARE SHALL BE AS SPECIFIED IN PART 3 UNDER PARAGRAPH E ON PLAN SHEET E4.
4. MFR PROVIDED BOLT GROMMENT NOT SHOWN.
5. MFR PROVIDED COVER GASKET NOT SHOWN.

BARRIER & JB-2 JUNCTION BOX
(BJB) & (JB-2) (309)

DRAWING NO. RL502c 02/23

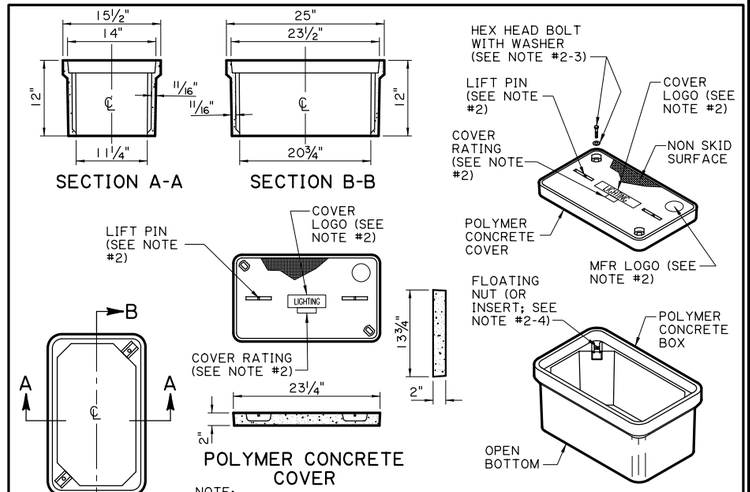

NOTE:
1. ALL DIMENSIONS ARE APPROXIMATE. REFER TO DETAIL RL502 FOR ADDITIONAL SPECIFICATIONS.
2. LOCATION, SIZE, AND QUANTITY OF MFR. HARDWARE, LIFT PINS, DRAIN HOLES, LOGO, COVER RATING, ETC. MAY VARY.
3. ALL HARDWARE SHALL BE AS SPECIFIED IN PART 3 UNDER PARAGRAPH E ON PLAN SHEET E4.
4. WHEN A MFR. DESIGNED INSERT IS PROVIDED, A MFR. DESIGNED DRAIN HOLE FOR EACH INSERT SHALL ALSO BE INCLUDED IN THE BOX WALL.

UNDERGROUND JUNCTION BOX
(UJB) (310)

DRAWING NO. RL502d 06/07

1. 8" X 8" X 4" MIN. CAST ALUMINUM JUNCTION BOX
2. LIQUIDTIGHT FLEXIBLE METAL CONDUIT W/EXTERNAL BONDING JUMPER (411)
3. RIGID ALUMINUM CONDUIT (SIZE & TYPE AS SHOWN ON PLANS) (408)
4. UNDERPASS LUMINAIRE WITH BALLAST AND GUARD (SIZE AND TYPE AS SHOWN ON PLANS) (311)
5. CONDUIT CLAMP (SEE DETAIL RL 504) (413)
6. * EXPANSION JOINT
7. * EXPANSION FITTING (412)
8. ALUMINUM CONDUIT FITTING (408) (SIZE AS REQUIRED)
9. CONCRETE SUPPORT STRUCTURE (BENT)

* REQUIRED ONLY WHEN A JOINT IN SUPERSTRUCTURE OCCURS ABOVE PILE.

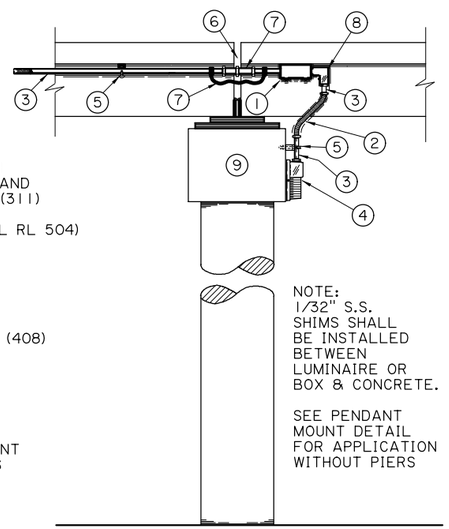

TYPICAL UNDERSTRUCTURE LUMINAIRE AND CONDUIT INSTALLATION

DRAWING NO. RL503d 03/06

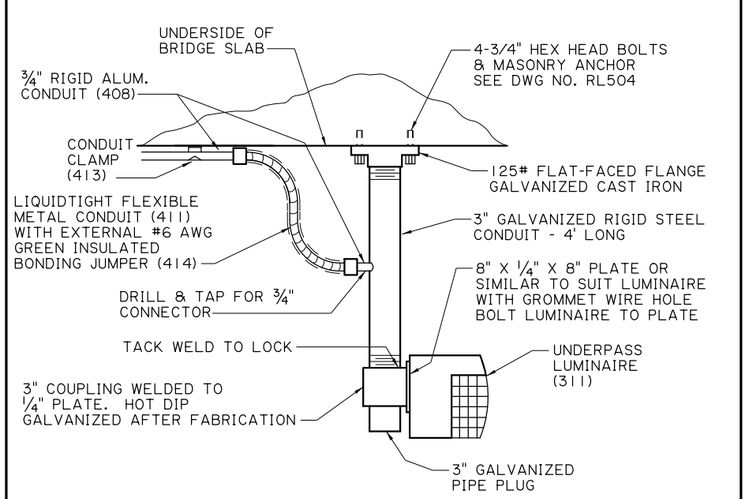

UNDERSTRUC. LUMINAIRE & CONDUIT INSTALL.
(TYPICAL)

DRAWING NO. RL503e 08/05

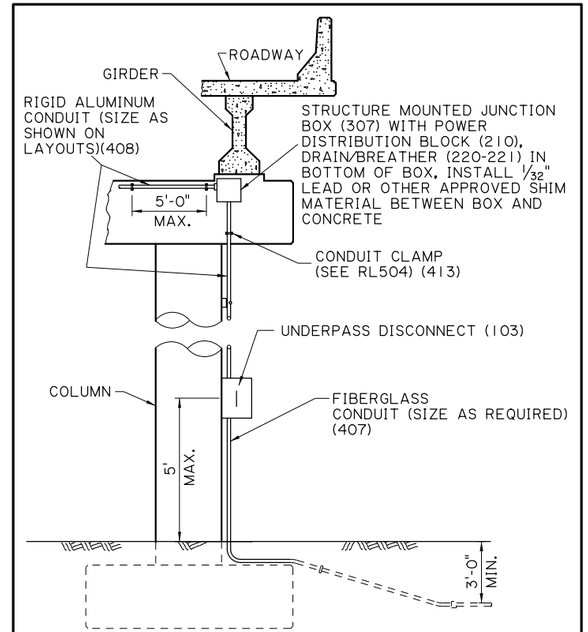

SERVICE TO STRUCTURE
(WITH SAFETY SWITCH; TYPICAL)

DRAWING NO. RL503h 04/07

✡ NUMBER(S) THAT ARE SHOWN IN PARENTHESES (###) CORRESPOND TO ELECTRICAL EQUIPMENT ITEMS LISTED ON PLAN SHEETS 177 - 181.

E45_Electrical Details-4.dgn

SHEET NUMBER 172

PARISH	CONTROL SECTION	STATE PROJECT
CALCASIEU	450-91	H.003931

DESIGN	DETAIL	REVIEW	SERIES
E. CLAY	E. CLAY	C. LEDET	4 OF 6
CHECK J. GERHART	CHECK J. GERHART		

TECHNICAL PROPOSAL
PRELIMINARY
FOR REVIEW ONLY
ENGINEER: JONATHAN E. GERHART
LICENSE #: 43052
DATE: 4/19/2023

NO.	DATE	REVISION OR CHANGE ORDER DESCRIPTION	BY

ELECTRICAL DETAILS

I-10 CALCASIEU RIVER BRIDGE P3

LOUISIANA DEPARTMENT OF TRANSPORTATION & DEVELOPMENT

CALCASIEU BRIDGE PARTNERS

4/19/2023

TECHNICAL PROPOSAL

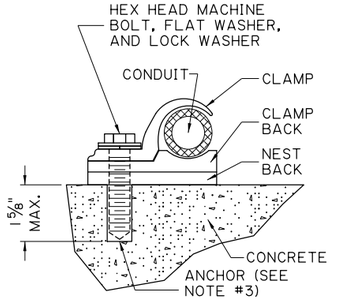

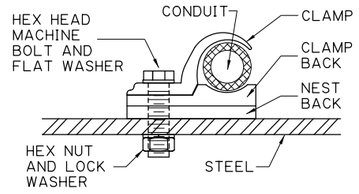

NOTE:

1. CLAMP, CLAMP BACK, AND NEST BACK SHALL BE HOT DIPPED GALVANIZED MALLEABLE IRON AND BE PRODUCTS OF THE SAME MANUFACTURER.
2. CLAMPS SHALL BE LOCATED ON 5'-0" (MAXIMUM) SPACING.
3. ANCHORS USED FOR MTG. EQUIPMENT TO CONCRETE STRUCTURES SHALL ONLY BE AS DESCRIBED BY CURRENT LADOTD MATERIALS LAB, APPROVED MATERIALS LIST, PRODUCT CATEGORY "CONCRETE ANCHOR SYSTEMS, MECHANICAL".
4. ALL MOUNTING HARDWARE, FASTENERS, NUTS, BOLTS, AND WASHERS SHALL BE STAINLESS STEEL AS SPECIFIED UNDER PARAGRAPH E ON PLAN SHEET E4.

BOLT SCHEDULE:

¾" & 1" CLAMPS - ¼" ø BOLTS
1¼" & 1½" CLAMPS - ⅜" ø BOLTS
2" & LARGER CLAMPS - ½" ø BOLTS

CONDUIT FASTENING
(TYPICAL)

DRAWING NO. RL504 01/08

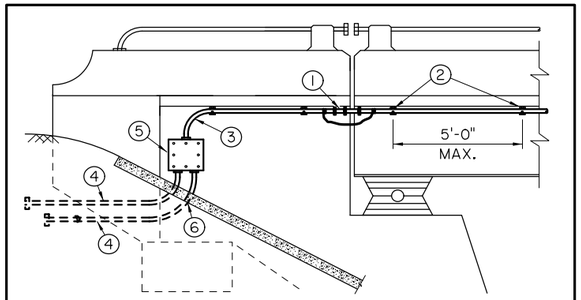

① EXPANSION FITTING (412) W/BONDING JUMPER (421)
② CONDUIT CLAMP (SEE RL504) (413)
③ RIGID ALUMINUM CONDUIT (SIZE AS REQUIRED) (408)
④ FIBERGLASS CONDUIT (SIZE AS REQUIRED) (407)

⑤ STRUCTURE MOUNTED JUNCTION BOX (307) WITH POWER DISTRIBUTION BLOCK (210), DRAIN/BREATHER (220-221) IN BOTTOM OF BOX. INSTALL 1/32" S.S. STEEL SHIMS OR OTHER APPR. MATERIAL BETWEEN BOX AND CONCRETE.

⑥ CUT AND PATCH CONCRETE

OVERPASS SERVICE INSTALLATION
(TYPICAL)

DRAWING NO. RL505 02/09

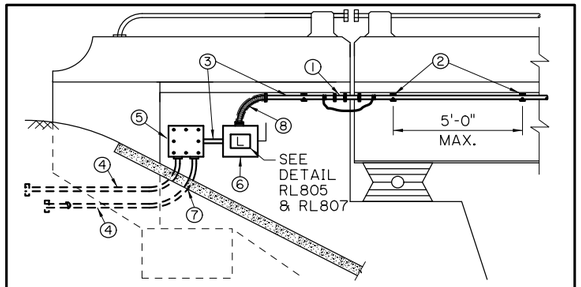

① EXPANSION FITTING (412) W/BONDING JUMPER (421)
② CONDUIT CLAMP (SEE RL504) (413)
③ RIGID ALUMINUM CONDUIT (SIZE AS REQUIRED) (408)
④ FIBERGLASS CONDUIT (SIZE AS REQUIRED) (407)

⑤ STRUCTURE MOUNTED JUNCTION BOX (307) WITH POWER DISTRIBUTION BLOCK (210), DRAIN/BREATHER (220-221) IN BOTTOM OF BOX. INSTALL 1/32" S.S. STEEL SHIMS OR OTHER APPR. MATERIAL BETWEEN BOX AND CONCRETE.

⑥ UNDERPASS DISCONNECT (103). NOTE: DISCONNECT IS REQUIRED ONLY FOR SERVICE TO UNDERPASS LIGHTS. FOR ALL OTHER STRUCTURE MOUNTED LIGHTING EQUIPMENT, DISCONNECT SHALL NOT BE INSTALLED.

⑦ CUT AND PATCH CONCRETE

⑧ LIQUIDTIGHT FLEXIBLE METAL CONDUIT (411) WITH EXTERNAL #6AWG GREEN INSULATED BONDING JUMPER (414)

OVERPASS SERVICE INSTALLATION
(TYPICAL)

DRAWING NO. RL505a 02/09

✡ NUMBER(S) THAT ARE SHOWN IN PARENTHESES (###) CORRESPOND TO ELECTRICAL EQUIPMENT ITEMS LISTED ON PLAN SHEETS 177 - 181.

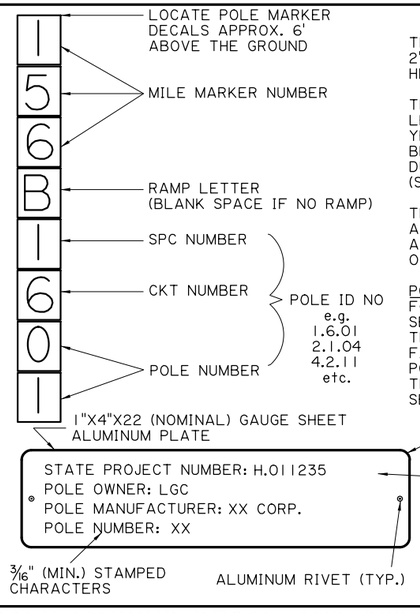

THE POLE MARKERS SHALL BE 2"X4" AND HAVE A CHARACTER HEIGHT OF 3" (MIN.).

THE MARKERS SHALL HAVE BLACK LETTERS AND A REFLECTIVE YELLOW BACKGROUND. THEY SHALL BE THE SELF-STICKING, HEAVY DUTY INDUSTRIAL TYPE. (SEE MARKER LEGEND)

THE MARKERS SHALL BE LOCATED APPROX. 6'-0" ABOVE THE GROUND AND AT A 45° ANGLE FACING ONCOMING TRAFFIC.

POLE SEQUENCE NUMBERING:
FOR EACH LIGHTING CIRCUIT, POLE SEQUENCE NUMBER "01" SHALL BE THE LAST POLE ON THE CIRCUIT FARTHEST AWAY FROM THE SERVICE POINT AND INCREMENTED BY 1 TRAVELING BACK TOWARDS THE SERVICE POINT.

POLE MARKER DECAL AND OWNERSHIP PLATE
(TYPICAL; LOWMAST)

DRAWING NO. RL506 01/22

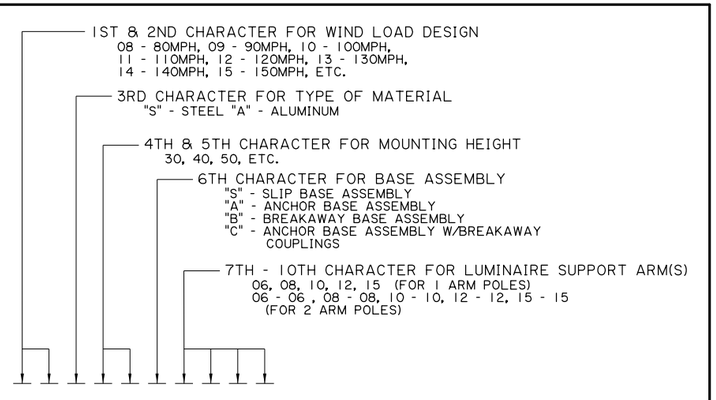

ADDITIONAL SUFFIXES MAY BE AS FOLLOWS:

"C" - BOLT COVERS
"B" - SINGLE BALLAST ADAPTER
"B2" - TWIN BALLAST ADAPTER
"NH" - OMIT HANDHOLE
"NAB" - OMIT ANCHOR BOLTS
"P" - PAINTED POLE FOLLOWED BY COLOR
"X°" - HANDHOLE LOCATION OTHER THAN 90° (90° IS STANDARD LOCATION)
"CA" - CLAMP TYPE ARM ATTACHMENT (FOR ALUMINUM POLES ONLY)
"FI" - FULLY INTERCHANGEABLE POLES
"TB" - TRANSFORMER BASE WITH POLE

STANDARD POLE NUMBER FORMAT
(LOWMAST)

DRAWING NO. RL506a 10/07

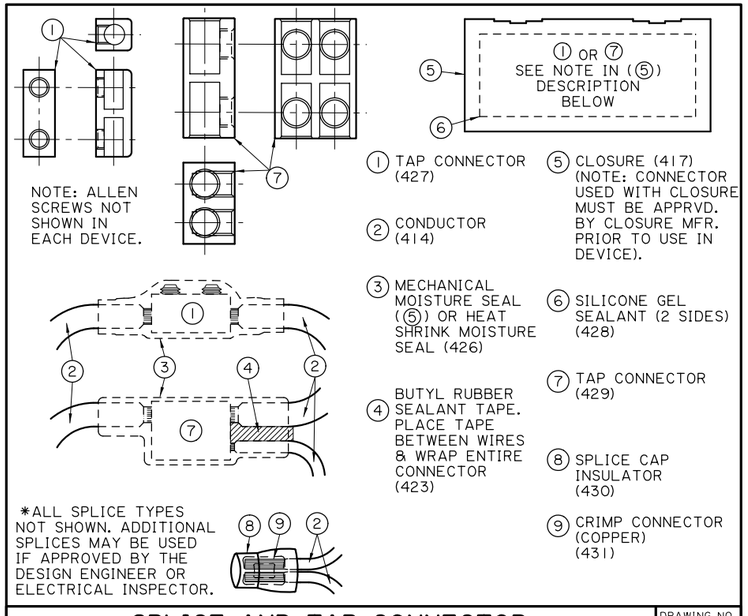

① TAP CONNECTOR (427)
② CONDUCTOR (414)
③ MECHANICAL MOISTURE SEAL (⑤) OR HEAT SHRINK MOISTURE SEAL (426)
④ BUTYL RUBBER SEALANT TAPE. PLACE TAPE BETWEEN WIRES & WRAP ENTIRE CONNECTOR (423)
⑤ CLOSURE (417) (NOTE: CONNECTOR USED WITH CLOSURE MUST BE APPRVD. BY CLOSURE MFR. PRIOR TO USE IN DEVICE).
⑥ SILICONE GEL SEALANT (2 SIDES) (428)
⑦ TAP CONNECTOR (429)
⑧ SPLICE CAP INSULATOR (430)
⑨ CRIMP CONNECTOR (COPPER) (431)

*ALL SPLICE TYPES NOT SHOWN. ADDITIONAL SPLICES MAY BE USED IF APPROVED BY THE DESIGN ENGINEER OR ELECTRICAL INSPECTOR.

SPLICE AND TAP CONNECTOR
(TYPICAL)

DRAWING NO. RL508 07/10

SHEET NUMBER 173

PARISH	CONTROL SECTION	STATE PROJECT
CALCASIEU	450-91	H.003931

	DESIGN	CHECK	DETAIL	CHECK	REVIEW	SERIES
	E. CLAY	J. GERHART	E. CLAY	J. GERHART	C. LEDET	5 OF 6

TECHNICAL PROPOSAL
PRELIMINARY
FOR REVIEW ONLY

ENGINEER:
JONATHAN E. GERHART

LICENSE #:
43052

DATE:
4/19/2023

NO.	DATE	REVISION OR CHANGE ORDER DESCRIPTION	BY

ELECTRICAL DETAILS

I-10 CALCASIEU RIVER BRIDGE P3

DOTD LOUISIANA DEPARTMENT OF TRANSPORTATION & DEVELOPMENT

CBP CALCASIEU BRIDGE PARTNERS

E46_Electrical Details-5.dgn

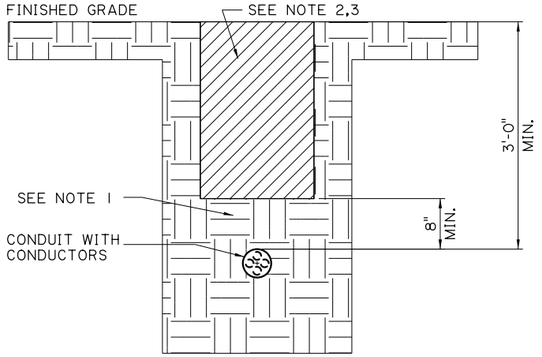

NOTE:
1. FINAL BACKFILL FREE OF LARGE STONES, ROCKS, CLUMPS, AND DEBRIS.
2. ANY ASPHALT, CONCRETE OR OTHER MATERIAL REMOVED DURING TRENCHING SHALL BE REPLACED WITH LIKE MATERIAL TO MATCH EXISTING.
3. SEE PLAN SPECIFICATIONS, GENERAL NOTES, LAYOUT SHEETS, AND DETAILS FOR ADDITIONAL INFORMATION.

TRENCHING DETAIL (TYPICAL)
(CONDUIT WITH CONDUCTORS RATED 600 VOLTS AND BELOW)

DRAWING NO. RL513 09/14

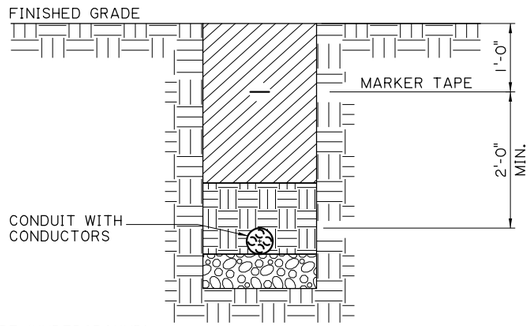

MARKER TAPE (UNDERGROUND):
MARKER TAPE SHALL BE UDG. DETECTABLE-TYPE, SHALL BE CONSTRUCTED FROM A FLEXIBLE AND DURABLE LAMINATE HAVING HIGH-VISIBILITY. MARKER TAPE SHALL ENDURE TEMPERATURE RANGES FROM -60°F TO 250°F (MINIMUM). MARKER TAPE SHALL BE 6" WIDE, HAVE 5 MIL (MIN.) THICKNESS, AND BE PRINTED POLYETHYLENE WITH A METALLIC CORE (OR BACKING). MARKER TAPE SHALL PROVIDE FULL LATERAL COVERAGE, REMAIN CENTERED AND IN VERTICAL ALIGNMENT 12" BELOW FINISHED GRADE, AND BE CONTINUOUS OVER THE ENTIRE LENGTH (NOTE: FOR LARGE RACEWAY CONFIGURATIONS, MORE THAN ONE (1) WIDTH OF TAPE MAY BE REQUIRED). MARKER TAPE SHALL HAVE RED COLOR AS SPECIFIED BY A.W.P.A./U.L.C.C. UNIFORM COLOR CODE FOR BURIED ELECTRIC LINES AND HAVE TWO (2) CONTINUOUS AND PERMANENT LINES OF PRINTED WARNING AND IDENTIFICATION IN BOLD, BLACK, BLOCK-TYPE INK OVER THE ENTIRE TAPE LENGTH. THE LINE SHALL READ "CAUTION BURIED ELECTRIC LINE BELOW". MARKER TAPE SHALL HAVE PROVEN UNDERGROUND DURABILITY, RESIST ACIDS, ALKALIS, WATER, AND BE MANUFACTURED FROM A HIGH QUALITY MATERIAL THAT MEETS OR EXCEEDS ALL INDUSTRY MINIMUM SPECIFICATIONS TO ASSURE LONG-TERM PERFORMANCE.

MARKER TAPE (UNDERGROUND)
(TYPICAL; DETECTABLE TYPE)

DRAWING NO. RL520 05/11

LIGHTING CONTROLLERS, SWITCHBOARDS, CONTROL DESKS, DISCONNECTS, JUNCTION BOXES, GATE HOUSINGS, OTHER ENCLOSURES CONTAINING MOVABLE CONTACTS OR WIRE SIZE(S) #2 COPPER OR LARGER, AND WHERE SPECIFIED BY THE PROJECT ENGINEER SHALL BE FIELD MARKED ACCORDING TO NATIONAL ELECTRICAL CODE (N.E.C.) TO WARN QUALIFIED PERSONNEL OF THE POTENTIAL ELECTRICAL ARC FLASH HAZARDS AND DANGER.

LABEL(S) SHALL BE 5"X7" (MINIMUM). LABEL(S) SHALL BE MADE OF HIGH QUALITY, SELF-ADHESIVE, WATER- AND CHEMICAL RESISTANT, FLEXIBLE VINYL. LABEL(S) SHALL BE OUTDOOR RATED AND PROTECTED FROM U.V. RADIATION, MOISTURE, OXIDATION, AND OTHER POLLUTANTS. LABEL(S) SHALL BE SURFACE MOUNT AND SUITABLE FOR INSTALLING ON FLAT, ROUND OR IRREGULAR SURFACES OF METAL, FIBERGLASS, OR PAINT. LABEL(S) SHALL BE OVERLAMINATED WITH CLEAR FILM TO PROVIDE PRINT PROTECTION. AFFIX LABEL(S) TO ALL DOORS OF LIGHTING CONTROLLERS, CONTROL CABINETS, CONSOLES, JUNCTION BOXES CONTAINING TERMINAL BLOCKS, GATE HOUSINGS, ETC., AND WHERE SPECIFIED BY THE PROJECT ENGINEER. LABELS SHALL COMPLY WITH MIN. REQUIREMENTS SET FORTH BY OSHA 29 CFR PART 1910, NFPA 70, AND NFPA 70E. ARC FLASH PROTECTION (SEE N.E.C. 110.16). ANY VARIATIONS IN LABEL SIZE MUST BE SUBMITTED TO THE DESIGN ENGINEER FOR APPROVAL.

LABEL "L1"

"ARC FLASH AND SHOCK HAZARD LABEL"

DESIGN ENGINEER TO PROVIDE REQUIRED INFORMATION. SEE NOTE G ON PLAN SHEET E1 FOR SUBMITAL REQUIREMENTS.

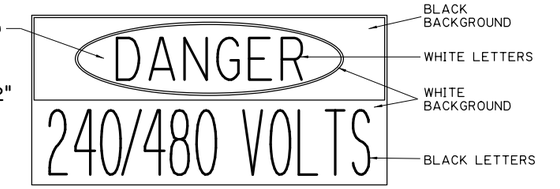

VOLT RATING SHOWN ON "L2" MAY VARY.

ELECTRICAL LABELS
(TYPICAL; SELF-ADHESIVE VINYL TYPE)

DRAWING NO. RL805 07/16

WHERE SHOWN ON THE PLANS OR REQUIRED BY THE PROJECT ENGINEER, ALL LIGHTING CONTROLLERS, SWITCHBOARDS, CONTROL DESKS, DISCONNECTS, JUNCTION BOXES, GATE HOUSINGS, AND OTHER EQUIPMENT ENCLOSURES SHALL HAVE A NAMEPLATE AS SHOWN BELOW. REFER TO PLAN SHEETS AND DETAILS FOR NAME AND LOCATION. NAMEPLATE SHALL BE FABRICATED FROM 1/16" THICK (MINIMUM) PHENOL PLATE ENGRAVED STOCK. NAMEPLATE SHALL HAVE SATIN BLACK OUTER LAYER, WHITE INNER LAYER AND 45° BEVELED EDGES. NAMEPLATE SHALL HAVE 1" SIZE (MINIMUM) BLOCK-STYLE LETTERS AND FOUR (4) 1/8" (MINIMUM) DIAMETER PRE-DRILLED HOLES, ONE (1) LOCATED AT EACH CORNER, FOR MOUNTING NAMEPLATE. FASTEN NAMEPLATE TO EQUIPMENT USING #6-32 (MINIMUM) MARINE DUTY STAINLESS STEEL SELF-TAPPING MACHINE SCREWS HAVING 30000 PSI (MINIMUM) YIELD STRENGTH. NAMEPLATE SHALL BE LEVEL AFTER INSTALLATION. INSTALL NAMEPLATE WHERE APPLICABLE OR AS INDICATED IN THE PLANS. ANY VARIATIONS IN NAMEPLATE SIZE SHOWN BELOW MUST BE SUBMITTED TO THE DESIGN ENGINEER FOR APPROVAL.

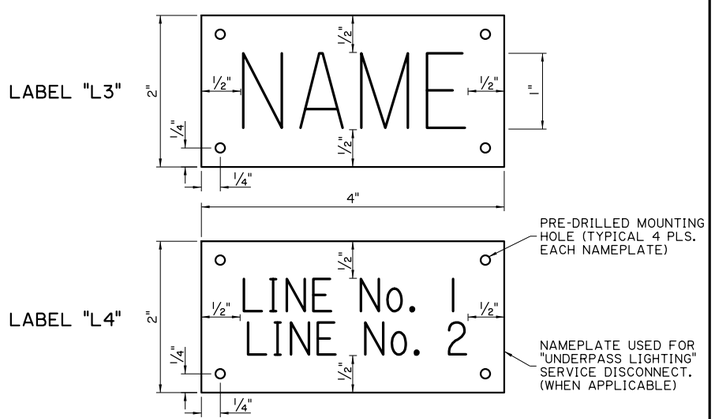

ELECTRICAL NAMEPLATES
(TYPICAL; ENGRAVED PHENOL STOCK TYPE)

DRAWING NO. RL807 04/11

✡ NUMBER(S) THAT ARE SHOWN IN PARENTHESES (###) CORRESPOND TO ELECTRICAL EQUIPMENT ITEMS LISTED ON PLAN SHEETS 177 - 181.

SHEET NUMBER 174

PARISH	CONTROL SECTION	STATE PROJECT
CALCASIEU	450-91	H.003931

	DESIGN	CHECK	DETAIL	CHECK	REVIEW	SERIES
	E. CLAY	J. GERHART	E. CLAY	J. GERHART	C. LEDET	6 OF 6

TECHNICAL PROPOSAL
PRELIMINARY
FOR REVIEW ONLY
ENGINEER: JONATHAN E. GERHART
LICENSE #: 43052
DATE: 4/19/2023

NO.	DATE	REVISION OR CHANGE ORDER DESCRIPTION	BY

ELECTRICAL DETAILS

I-10 CALCASIEU RIVER BRIDGE P3

DOTD LOUISIANA DEPARTMENT OF TRANSPORTATION & DEVELOPMENT
CBP CALCASIEU BRIDGE PARTNERS

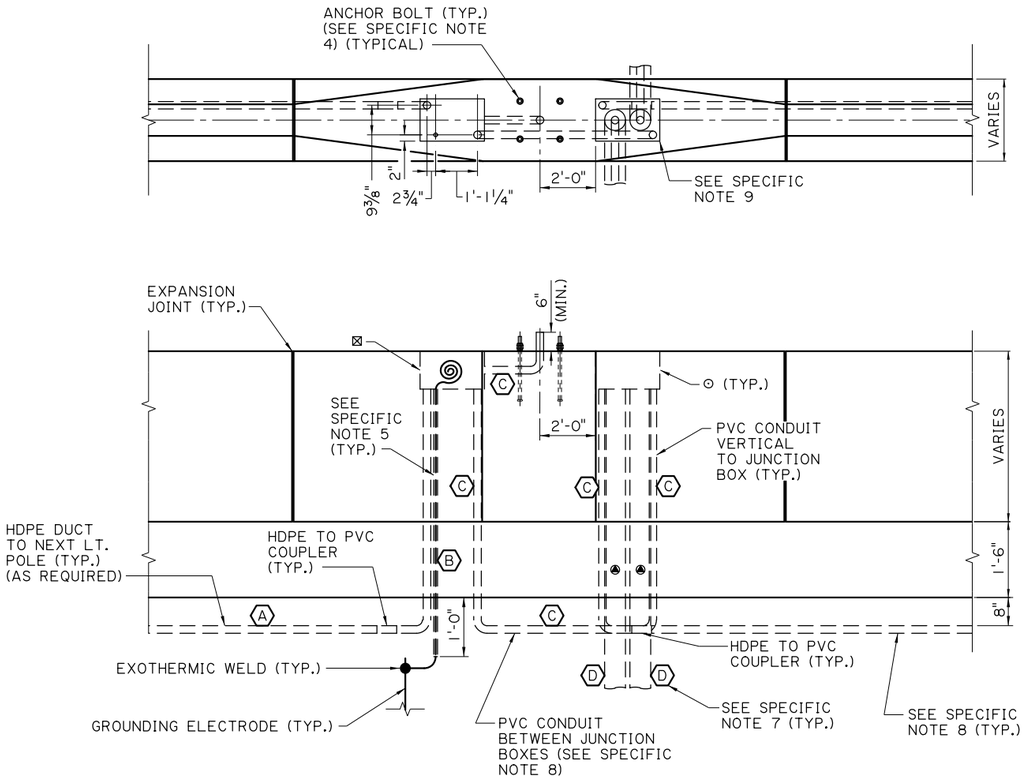

DETAIL "A"
SCALE: NTS

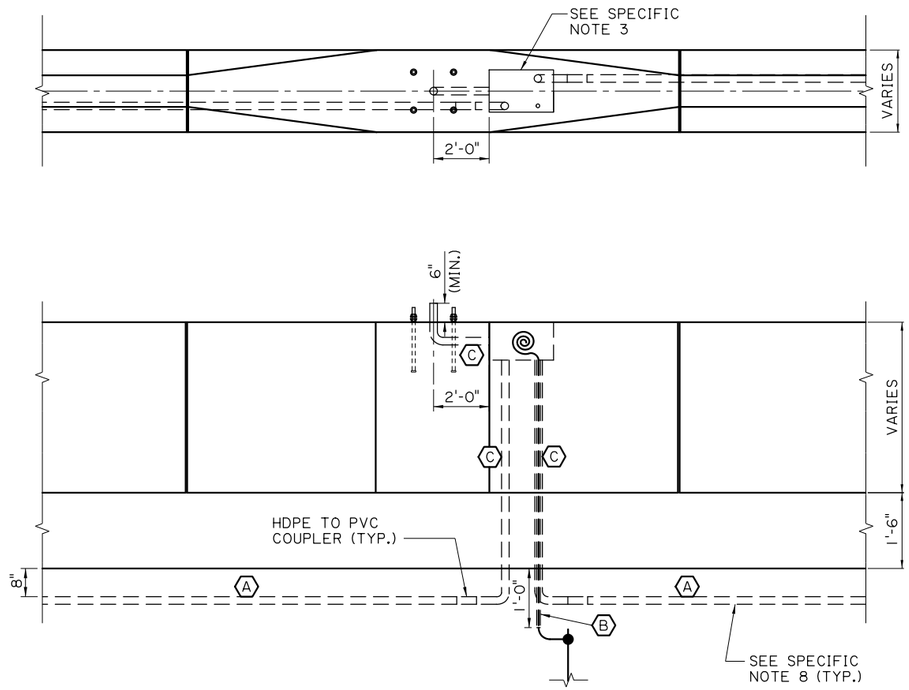

DETAIL "B"
SCALE: NTS

SPECIFIC NOTES:

1. CONDUITS SHALL BE CUT FLUSH WITH SIDES AND BOTTOM OF JUNCTION BOXES. CONDUIT FROM JUNCTION BOX TO THE LIGHT POLE LOCATION SHALL BE STUBBED 6" (MINIMUM) ABOVE CONCRETE WITH SMOOTH EDGES.
2. FOR DETAILS OF THE MEDIAN BARRIER TRANSITION, REFER TO MEDIAN BARRIER SHEETS.
3. ALL CONDUIT LOCATIONS / ORIENTATION IN THE JUNCTION BOX AS SHOWN WITH CONDUITS LOCATED 1 (ONE) INCH MAX FROM BOTH INTERIOR SIDES OF THE BOX.
4. INSTALL ANCHOR BOLTS CENTERED ALONG FOUNDATION, BOLT CIRCLE PATTERN PER POLE MANUFACTURER'S REQUIREMENTS.
5. CONTRACTOR SHALL INSTALL PVC SLEEVE 6" BELOW FOUNDATION FOR GROUNDING ELECTRODE & GROUNDING ELECTRODE CONDUCTOR INSTALLATION. TYPICAL FOR EACH LIGHT POLE LOCATION. PVC SLEEVE ENTRY INTO BARRIER JUNCTION BOX MAY NOT BE IN LOCATION AS SHOWN IN "PLAN OF TRANSITION" VIEW OF JUNCTION BOX. CONTRACTOR SHALL COORDINATE LOCATIONS OF ALL BARRIER MOUNTED EQUIPMENT WITH THE BARRIER CONTRACTOR AND PROJECT ENGINEER PRIOR TO POURING CONCRETE. ALL COSTS FOR THIS WORK SHALL BE PAID FOR BY PAY ITEM 822-09-00100.
6. PVC CONDUIT AND HDPE DUCT SHALL BE U.L. LISTED. TRANSITION FROM HDPE DUCT TO PVC CONDUIT SHALL BE BY USE OF A HIGH-INTEGRITY HDPE-TO-PVC U.L. LISTED COUPLER.
7. 6" VERTICAL CONDUIT CASING. HORIZONTAL HDPE CASING BORED UNDER ROADWAY NOT SHOWN. WHEN CONNECTING CONDUIT AND HDPE CASINGS, USE HDPE TO PVC COUPLER. HDPE TO PVC COUPLER NOT SHOWN. SEE LAYOUT SHEETS FOR UNDER ROAD BORE LOCATIONS. VERTICAL CONDUIT & HORIZONTAL HDPE CASINGS SHALL CONTAIN "CONDUIT (C)" TO BARRIER JUNCTION BOX (TYPICAL).
8. CONDUIT AND HDPE BETWEEN LIGHT POLES AND JUNCTION BOXES SHALL BE INSTALLED VIA TRENCHING AND BACKFILLING AT A DEPTH OF 8" BELOW CONCRETE BARRIER FOOTING. SEE "DETAIL RL513" FOR ADDITIONAL SPECIFICATIONS.
9. CONDUIT ORIENTATION / LOCATION IN THE JUNCTION BOX AS SHOWN. CONTRACTOR CAN FIELD ADJUST, BUT PRIOR TO FIELD ADJUSTING THE CONTRACTOR SHALL SUBMIT A PROPOSED NEW CONDUIT LAYOUT AS AN RFI TO PROJECT ENGINEER TO BE SENT TO THE DESIGN ENGINEER FOR REVIEW.
10. DETAILS SHOWN ON THIS SHEET MAY BE MIRRORED VERTICALLY AND HORIZONTALLY AS REQUIRED.

LABEL	CONDUIT WITH CONDUCTORS	PAY ITEM
(A)	CONDUIT WITH CONDUCTORS (PVC/HDPE)(2")(2 #2, 1 #2 BARE STRANDED GROUND)	822-02-00500
(B)	CONDUIT WITH CONDUCTORS (PVC/HDPE)(3/4")(1 #2 BARE STRANDED GROUND)	822-02-00100
(C)	CONDUIT WITH CONDUCTORS (PVC/HDPE)(2")(2 #2, 1 #2 BARE STRANDED GROUND)	822-02-00500
(D)	CONDUIT WITH CONDUCTORS (PVC/HDPE)(6")	822-02-01000

- ◉ PVC (C) CONDUIT WITHIN CASING NOT SHOWN IN THIS VIEW FOR CLARITY.
- ⊙ BARRIER JUNCTION BOX (BJB) EMBEDDED IN CONCRETE BARRIER. INCLUDES CASING FROM BOTH UNDER ROAD BORINGS. FIELD CUT REINFORCING BARS AS REQUIRED. SEE SPECIFIC NOTE #3.
- ⊠ ADDITIONAL JUNCTION BOX (BJB)

HDPE DUCT (SCH. 40)	AVERAGE I.D.	MINIMUM WALL
2"	2.047"	0.154"

HDPE DUCT (SCH. 80)	AVERAGE I.D.	MINIMUM WALL
6"	5.709"	0.432"

PVC CONDUIT (SCH. 40)	NOMINAL I.D.	NOMINAL O.D.
¾"	1.050"	1.050"
2"	2.375"	2.375"

PVC CONDUIT (SCH. 80)	NOMINAL I.D.	NOMINAL O.D.
6"	6.625"	6.625"

SHEET NUMBER 175

PARISH	CONTROL SECTION	STATE PROJECT
CALCASIEU	450-91	H.003931

DESIGN	E. CLAY
CHECK	J. GERHART
DETAIL	E. CLAY
CHECK	J. GERHART
REVIEW	C. LEDET
SERIES #	1 OF 2

TECHNICAL PROPOSAL
PRELIMINARY
FOR REVIEW ONLY
ENGINEER:
JONATHAN E. GERHART
LICENSE #:
43052
DATE:
4/19/2023

NO.	DATE	REVISION OR CHANGE ORDER DESCRIPTION	BY

MEDIAN BARRIER
ELECTRICAL EQUIPMENT
DETAILS - 1

I-10 CALCASIEU RIVER BRIDGE P3

LOUISIANA DEPARTMENT OF TRANSPORTATION & DEVELOPMENT

CALCASIEU BRIDGE PARTNERS

4/19/2023

TECHNICAL PROPOSAL

E48_Median Barrier Electrical Equipment Details -1 .dgn

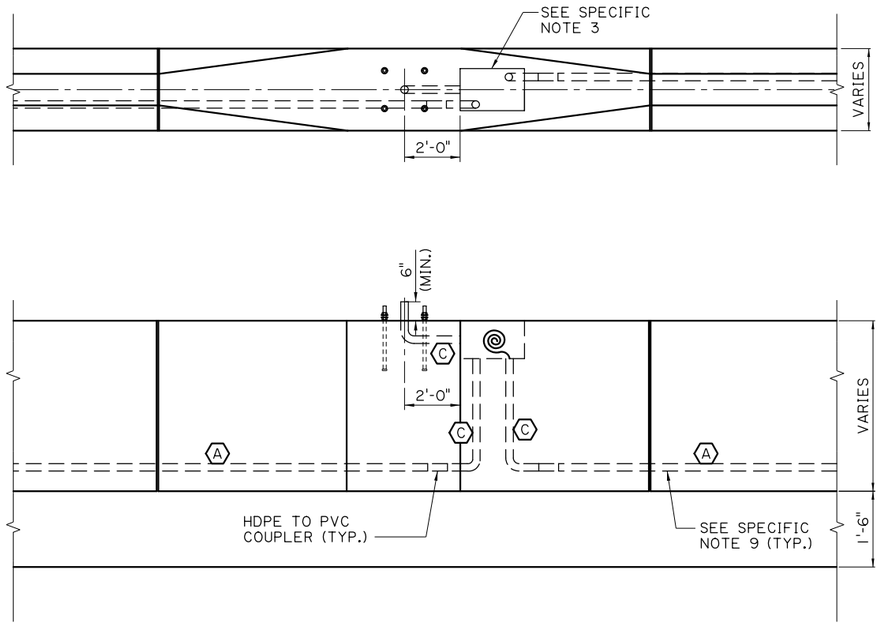

DETAIL "C"
SCALE: NTS

⊙ BARRIER JUNCTION BOX (BJB) EMBEDDED IN CONCRETE BARRIER. INCLUDES CASING FROM BOTH UNDER ROAD BORINGS. FIELD CUT REINFORCING BARS AS REQUIRED. SEE SPECIFIC NOTE #3.

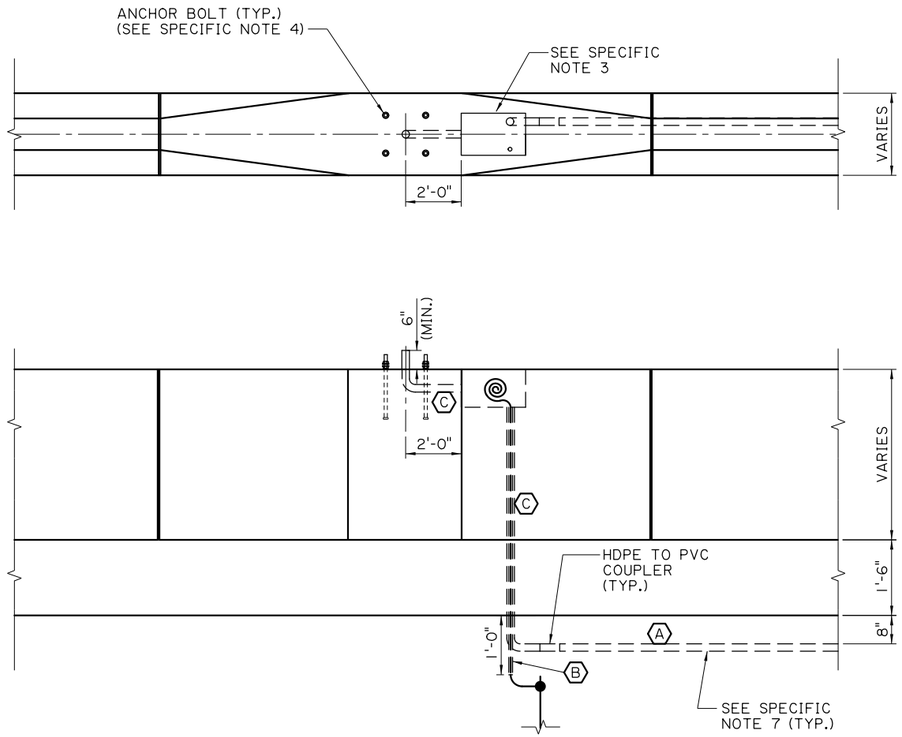

DETAIL "D"
SCALE: NTS

SPECIFIC NOTES:

1. CONDUITS SHALL BE CUT FLUSH WITH SIDES AND BOTTOM OF JUNCTION BOXES. CONDUIT FROM JUNCTION BOX TO THE LIGHT POLE LOCATION SHALL BE STUBBED 6" (MINIMUM) ABOVE CONCRETE WITH SMOOTH EDGES.
2. FOR DETAILS OF THE MEDIAN BARRIER TRANSITION, REFER TO MEDIAN BARRIER SHEETS.
3. ALL CONDUIT LOCATIONS / ORIENTATION IN THE JUNCTION BOX AS SHOWN WITH CONDUITS LOCATED 1 (ONE) INCH MAX FROM BOTH INTERIOR SIDES OF THE BOX.
4. INSTALL ANCHOR BOLTS CENTERED ALONG FOUNDATION, BOLT CIRCLE PATTERN PER POLE MANUFACTURER'S REQUIREMENTS.
5. CONTRACTOR SHALL INSTALL PVC SLEEVE 6" BELOW FOUNDATION FOR GROUNDING ELECTRODE & GROUNDING ELECTRODE CONDUCTOR INSTALLATION. TYPICAL FOR EACH LIGHT POLE LOCATION. PVC SLEEVE ENTRY INTO BARRIER JUNCTION BOX MAY NOT BE IN LOCATION AS SHOWN IN "PLAN OF TRANSITION" VIEW OF JUNCTION BOX. CONTRACTOR SHALL COORDINATE LOCATIONS OF ALL BARRIER MOUNTED EQUIPMENT WITH THE BARRIER CONTRACTOR AND PROJECT ENGINEER PRIOR TO POURING CONCRETE. ALL COSTS FOR THIS WORK SHALL BE PAID FOR BY PAY ITEM 822-09-00100.
6. PVC CONDUIT AND HDPE DUCT SHALL BE U.L. LISTED. TRANSITION FROM HDPE DUCT TO PVC CONDUIT SHALL BE BY USE OF A HIGH-INTEGRITY HDPE-TO-PVC U.L. LISTED COUPLER.
7. CONDUIT AND HDPE BETWEEN LIGHT POLES AND JUNCTION BOXES SHALL BE INSTALLED VIA TRENCHING AND BACKFILLING AT A DEPTH OF 8" BELOW CONCRETE BARRIER FOOTING. SEE "DETAIL RL513" FOR ADDITIONAL SPECIFICATIONS.
8. DETAILS SHOWN ON THIS SHEET MAY BE MIRRORED VERTICALLY AND HORIZONTALLY AS REQUIRED.
9. DETAIL "C" SHALL APPLY WHERE MEDIAN POLES ARE MOUNTED ON A BRIDGE STRUCTURE.
10. INSTALL CONDUIT EXPANSION FITTINGS AS SHOWN IN DETAIL AT EACH STRUCTURAL OPEN JOINT IN THE MEDIAN BARRIER.

HDPE DUCT (SCH. 40)	AVERAGE I.D.	MINIMUM WALL
2"	2.047"	0.154"

HDPE DUCT (SCH. 80)	AVERAGE I.D.	MINIMUM WALL
6"	5.709"	0.432"

PVC CONDUIT (SCH. 40)	NOMINAL I.D.	NOMINAL O.D.
¾"	1.050"	1.050"
2"	2.375"	2.375"

PVC CONDUIT (SCH. 80)	NOMINAL I.D.	NOMINAL O.D.
6"	6.625"	6.625"

LABEL	CONDUIT WITH CONDUCTORS	PAY ITEM
Ⓐ	CONDUIT WITH CONDUCTORS (PVC/HDPE)(2")(2 #2, 1 #2 BARE STRANDED GROUND)	822-02-00500
Ⓑ	CONDUIT WITH CONDUCTORS (PVC/HDPE)(3/4")(1 #2 BARE STRANDED GROUND)	822-02-00100
Ⓒ	CONDUIT WITH CONDUCTORS (PVC/HDPE)(2")(2 #2, 1 #2 BARE STRANDED GROUND)	822-02-00500
Ⓓ	CONDUIT WITH CONDUCTORS (PVC/HDPE)(6")( )	822-02-01000

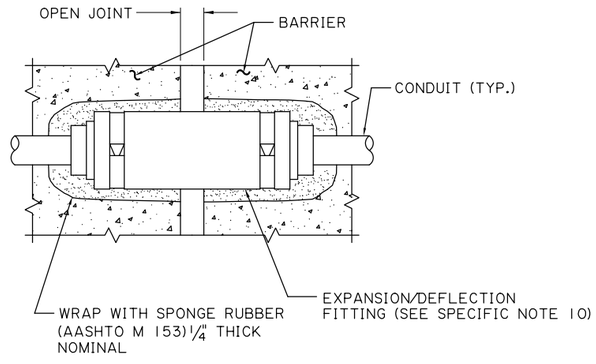

EXPANSION/DEFLECTION FITTING DETAIL
SCALE: NTS

SHEET NUMBER 176

PARISH	CONTROL SECTION	STATE PROJECT
CALCASIEU	450-91	H.003931

	DESIGN	CHECK	DETAIL	CHECK	REVIEW	SERIES
	E. CLAY	J. GERHART	E. CLAY	J. GERHART	C. LEDET	2 OF 2

TECHNICAL PROPOSAL
PRELIMINARY
FOR REVIEW ONLY
ENGINEER: JONATHAN E. GERHART
LICENSE #: 43052
DATE: 4/19/2023

NO.	DATE	REVISION OR CHANGE ORDER DESCRIPTION	BY

MEDIAN BARRIER
ELECTRICAL EQUIPMENT
DETAILS - 2

I-10 CALCASIEU RIVER BRIDGE P3

DOTD LOUISIANA DEPARTMENT OF TRANSPORTATION & DEVELOPMENT
CBP CALCASIEU BRIDGE PARTNERS

INDEX TO SHEETS

SHEET NO.	DESCRIPTION
1	TITLE SHEET AND LAYOUT MAP
2	AET ZONE 3D RENDERING
3	AET CRITICAL DIMENSIONS ELEVATION VIEW
4	AET CRITICAL DIMENSIONS PLAN VIEW
5	AET ZONE POWER BLOCK DIAGRAM

TOTAL SHEETS IN VOLUME 5 = 5

STATE OF LOUISIANA
DEPARTMENT OF TRANSPORTATION AND DEVELOPMENT

PLANS OF PROPOSED STATE HIGHWAY

FEDERAL PROJECT NUMBER H003931

STATE PROJECT NUMBER H.003931

I-10 CALCASIEU RIVER BRIDGE PUBLIC-PRIVATE PARTNERSHIP PROJECT

CALCASIEU PARISH

INTERSTATE 10

VOLUME 5 - ELECTRONIC TOLL COLLECTION SYSTEM

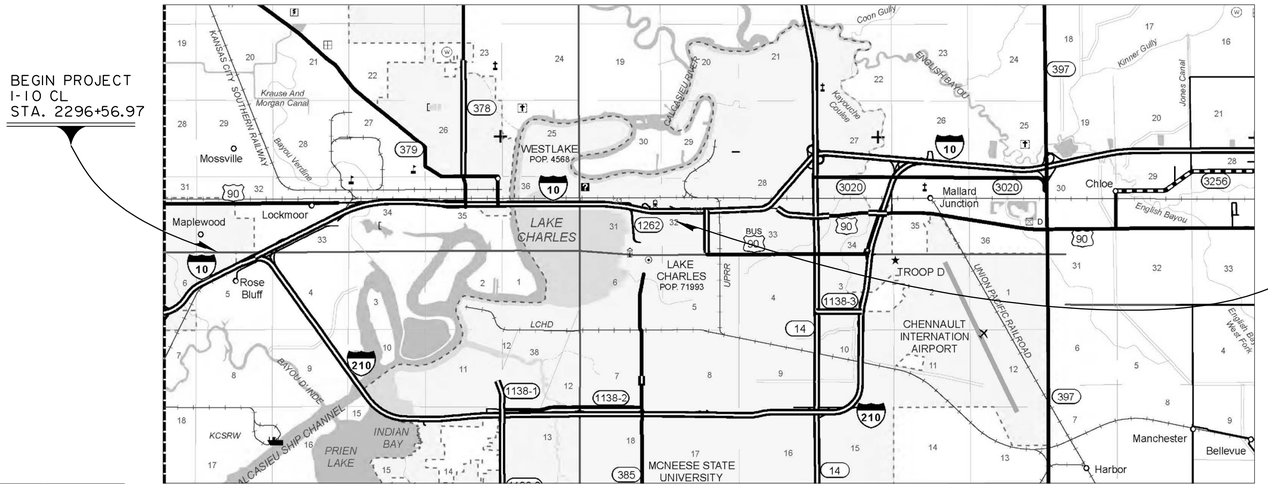

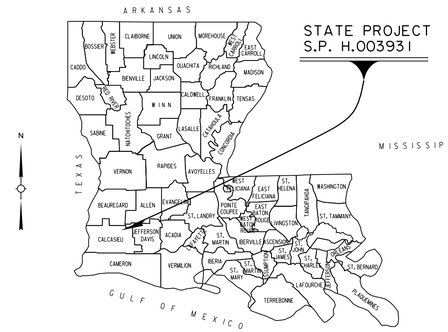

VICINITY MAP

DATE	REVISION	DATE	RECOMMENDED	DATE	APPROVED

SCHEDULE OF REVISIONS

LAYOUT MAP

SCALE: 1/2 INCH = 1 MILE

1 0 1 2 3

SURVEY

HORIZONTAL CONTROL:
LOUISIANA STATE PLANE COORDINATES
ZONE 1702

BASE STATIONS:
PID: DP7417, CORS ID: CALC
DESIGNATION: CALCASIEU PASS CORS ARP
LAT. = N29°46'05.28112" LON. = W093°20'34.37139"
NORTHING/Y = 466763.16 EASTING/X = 2643301.38

PID: DK3579, CORS ID: CAMR
DESIGNATION: CAMERON PARISH CT CORS ARP
LAT. = N29°47'54.57704" LON. = W093°19'30.38074"
NORTHING/Y = 477703.50 EASTING/X = 2649131.90

VERTICAL CONTROL: NAVD 88 (GEOID 18) US SFT

ALL BEARINGS AND DISTANCES ARE GRID

TYPE OF CONSTRUCTION

REMOVING ASPHALT PAVEMENT, DRAINAGE STRUCTURES, GRADING, BRIDGES, MSE WALLS, BASE COURSE, ASPHALT CONCRETE, CONCRETE CURB, TRAFFIC SIGNALIZATION, ITS, LIGHTING PERMANENT SIGNING, PERMANENT STRIPING.

STANDARD SPECIFICATIONS

THE 2016 EDITION OF THE LOUISIANA DOTD STANDARD SPECIFICATIONS FOR ROADS AND BRIDGES,AS AMMENDED BY THE PROJECT SPECIFICATIONS, SHALL GOVERN.

SCALES

PLAN: 1" = 50'
PROFILE HORIZ: 1" = 50'
PROFILE VERT: 1" = 5'

LENGTH AND LOCATION OF WORK

CONTROL SECTION	STATION BEGIN	STATION END	LOGMILE BEGIN	LOGMILE END	ALGEBRAIC SUM OF ALL EQUATIONS FEET	GROSS LENGTH FEET	EXCEPTION FEET	BRIDGE LENGTH FEET	BRIDGE LENGTH MILES	ROADWAY LENGTH FEET	ROADWAY LENGTH MILES
TOTAL LENGTH OF BRIDGES											
TOTAL LENGTH OF ROADWAY											
TOTAL MILES											

APPROVED

DOTD CHIEF ENGINEER

DATE

SHEET NUMBER	1
PARISH	CALCASIEU
CONTROL SECTION	450-91
STATE PROJECT	H.003931
DESIGN CHECK	
DETAIL CHECK	
REVIEW	
SERIES #	

TECHNICAL PROPOSAL
PRELIMINARY
NOT FOR CONSTRUCTION
ENGINEER:
LICENSE #:
DATE: 05/10/2023

NO.	DATE	REVISION OR CHANGE ORDER DESCRIPTION	BY

TITLE SHEET

I-10 CALCASIEU RIVER BRIDGE P3

LOUISIANA DEPARTMENT OF TRANSPORTATION & DEVELOPMENT

CALCASIEU BRIDGE PARTNERS

These drawings and specifications contain confidential and proprietary information and are the property of Kapsch TrafficCom USA Inc. and are issued in strict confidence and will be kept confidential and used solely for the purpose intended and for no other purpose and shall not be transmitted, reproduced, copied, and/or used as the basis for manufacture or sale of apparatus unless otherwise agreed to in writing by Kapsch TrafficCom USA Inc.

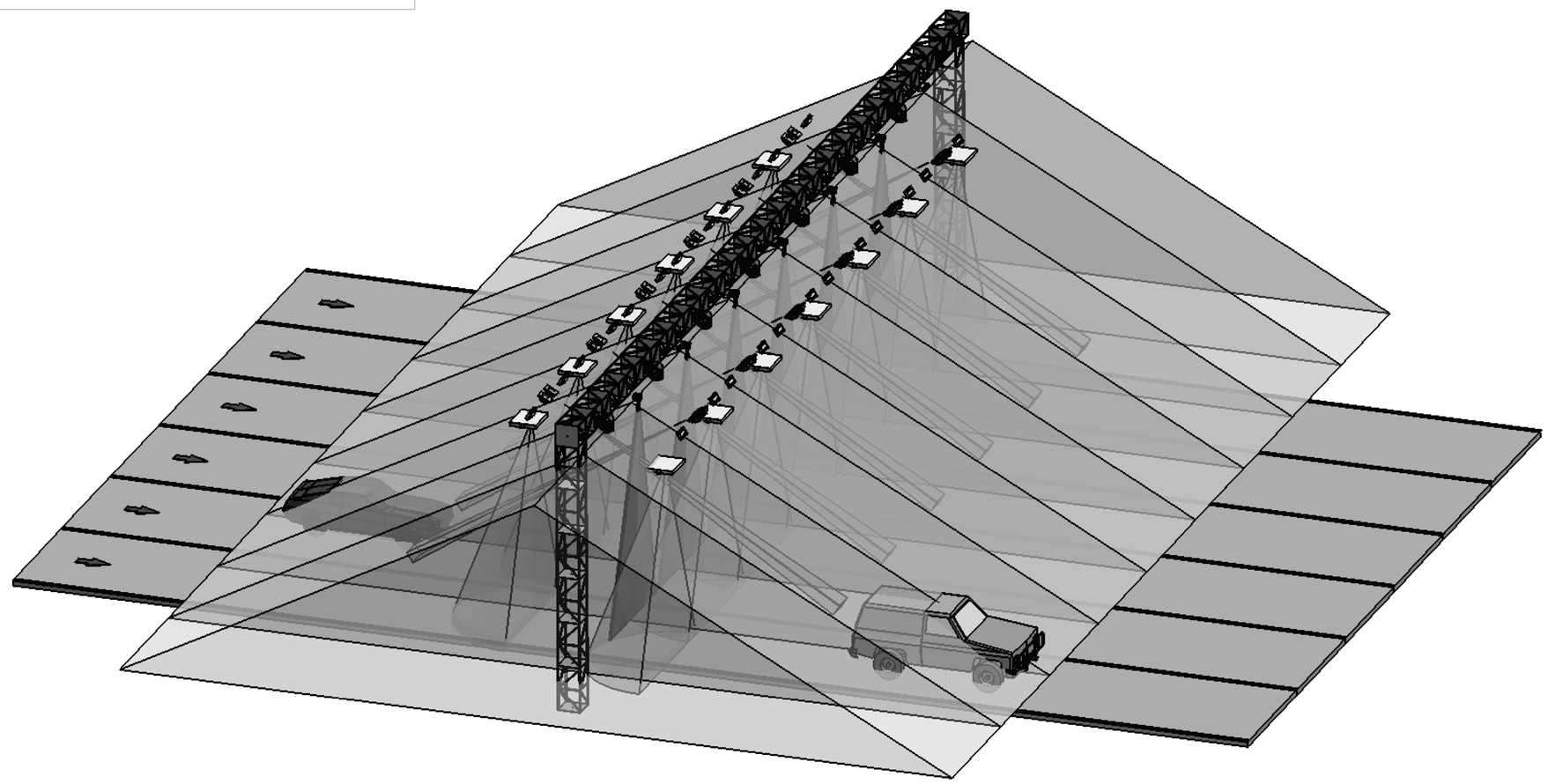

UNLESS OTHERWISE SPECIFIED: DIMENSIONS ARE IN MILLIMETERS SURFACE FINISH: TOLERANCES: LINEAR: ANGULAR:		FINISH:			DEBUR AND BREAK SHARP EDGES	DO NOT SCALE DRAWING	REVISION
	NAME	SIGNATURE	DATE			kapsch >>>	
DRAWN	L. Roloson					TITLE: Calcasieu	
CHK'D							
APPV'D							
MFG							
Q.A				MATERIAL:		DWG NO. N/A	A3
				WEIGHT:		SCALE:1:500	SHEET 1 OF 1

SHEET NUMBER 2

PARISH	CONTROL SECTION	STATE PROJECT
CALCASIEU	450-91	H.003931

DESIGN	CHECK	DETAIL	CHECK	REVIEW	SERIES #

TECHNICAL PROPOSAL

PRELIMINARY
NOT FOR CONSTRUCTION

ENGINEER:

LICENSE #:

DATE: 05/10/2023

NO.	DATE	REVISION OR CHANGE ORDER DESCRIPTION	BY

STATE OF LOUISIANA — JOHN BEL EDWARDS — GOVERNOR

AET ZONE
3D RENDERING

I-10 CALCASIEU RIVER BRIDGE P3

DOTD LOUISIANA DEPARTMENT OF TRANSPORTATION & DEVELOPMENT

CBP CALCASIEU BRIDGE PARTNERS

These drawings and specifications contain confidential and proprietary information and are the property of Kapsch TrafficCom USA Inc. and are issued in strict confidence and will be kept confidential and used solely for the purpose intended and for no other purpose and shall not be transmitted, reproduced, copied, and/or used as the basis for manufacture or sale of apparatus unless otherwise agreed to in writing by Kapsch TrafficCom USA Inc.

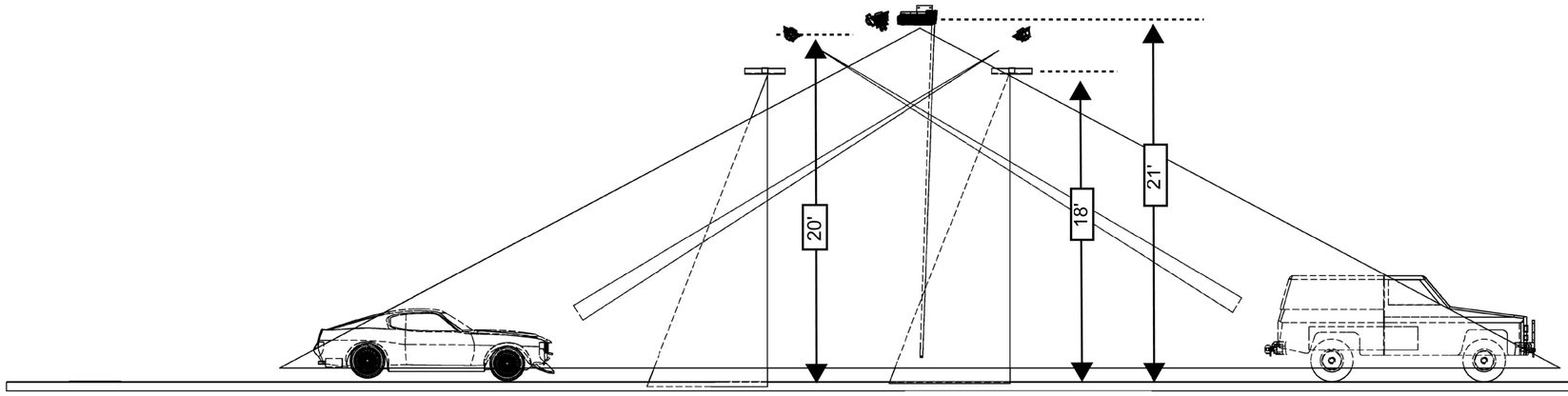

UNLESS OTHERWISE SPECIFIED: DIMENSIONS ARE IN MILLIMETERS SURFACE FINISH: TOLERANCES: LINEAR: ANGULAR:		FINISH:			DEBUR AND BREAK SHARP EDGES	
	NAME	SIGNATURE	DATE			
DRAWN	L. Roloson		Mar 2023			
CHK'D						
APPV'D						
MFG						
Q.A				MATERIAL:		
				WEIGHT:		

DO NOT SCALE DRAWING | REVISION

kapsch

TITLE:
Calcasieu Elevation Drawing

DWG NO. N/A | A3

SCALE:1:500 | SHEET 1 OF 1

SHEET NUMBER 3

PARISH	CONTROL SECTION	STATE PROJECT
CALCASIEU	450-91	H.003931

DESIGN | CHECK | DETAIL | CHECK | REVIEW | SERIES #

TECHNICAL PROPOSAL

PRELIMINARY
NOT FOR CONSTRUCTION

ENGINEER:

LICENSE #:

DATE: 05/10/2023

NO.	DATE	REVISION OR CHANGE ORDER DESCRIPTION	BY

AET CRITICAL DIMENSIONS
ELEVATION VIEW

I-10 CALCASIEU RIVER BRIDGE P3

LOUISIANA DEPARTMENT OF TRANSPORTATION & DEVELOPMENT

CALCASIEU BRIDGE PARTNERS

These drawings and specifications contain confidential and proprietary information and are the property of Kapsch TrafficCom USA Inc. and are issued in strict confidence and will be kept confidential and used solely for the purpose intended and for no other purpose and shall not be transmitted, reproduced, copied, and/or used as the basis for manufacture or sale of apparatus unless otherwise agreed to in writing by Kapsch TrafficCom USA Inc.

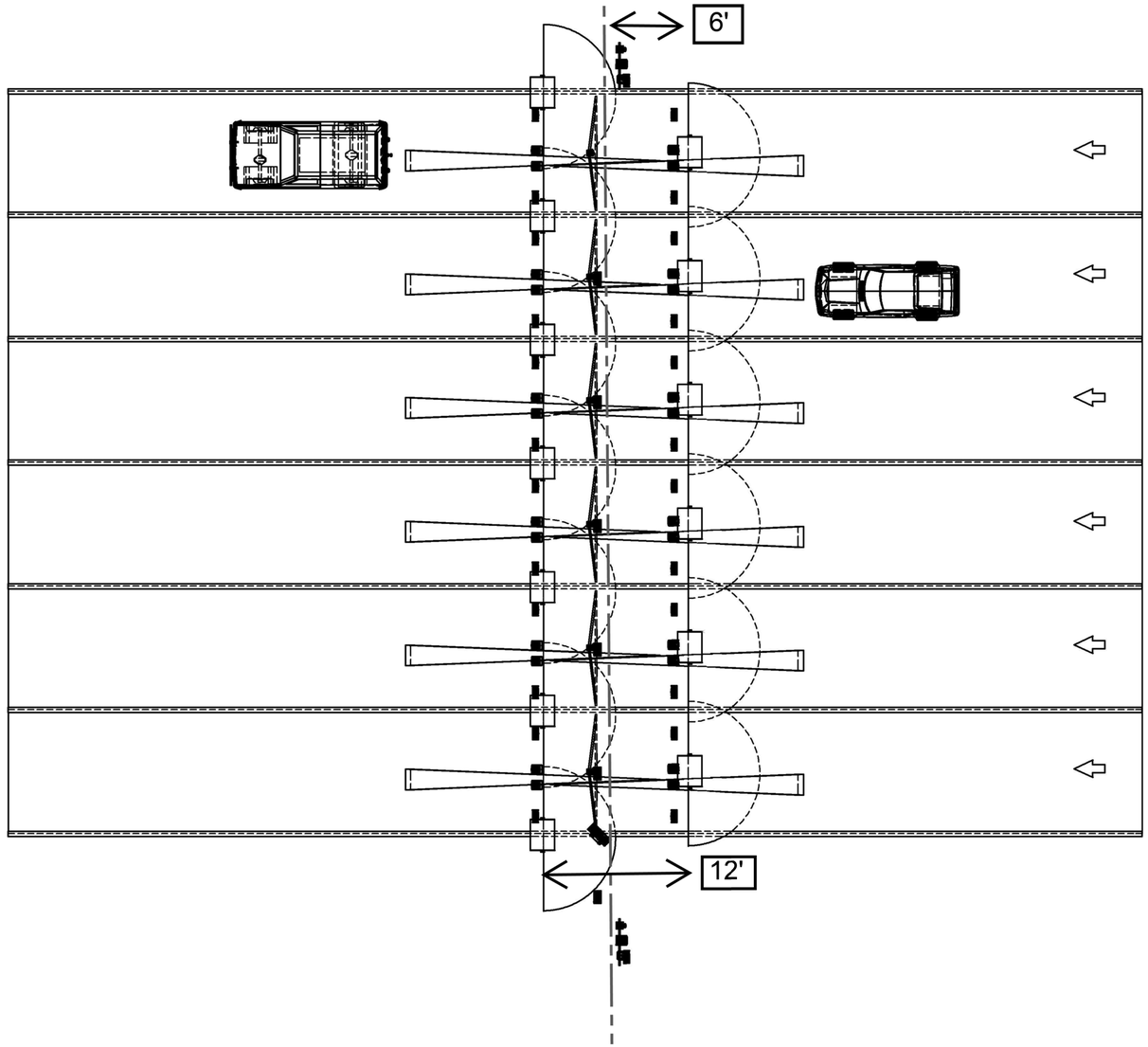

UNLESS OTHERWISE SPECIFIED: DIMENSIONS ARE IN MILLIMETERS SURFACE FINISH: TOLERANCES: LINEAR: ANGULAR:		FINISH:				DEBUR AND BREAK SHARP EDGES	DO NOT SCALE DRAWING / REVISION
	NAME	SIGNATURE	DATE				TITLE: Calcasieu Plan View
DRAWN	L. Roloson		Mar 2023				
CHK'D							
APPV'D							
MFG							
Q.A				MATERIAL:			DWG NO. N/A / A3
				WEIGHT:			SCALE:1:500 / SHEET 1 OF 1

SHEET NUMBER 4

PARISH	CONTROL SECTION	STATE PROJECT
CALCASIEU	450-91	H.003931

DESIGN CHECK	DETAIL CHECK	REVIEW SERIES #

TECHNICAL PROPOSAL

PRELIMINARY
NOT FOR CONSTRUCTION

ENGINEER:

LICENSE #:

DATE: 05/10/2023

NO.	DATE	REVISION OR CHANGE ORDER DESCRIPTION	BY

AET CRITICAL DIMENSIONS
PLAN VIEW

I-10 CALCASIEU RIVER BRIDGE P3

DOTD LOUISIANA DEPARTMENT OF TRANSPORTATION & DEVELOPMENT

CBP CALCASIEU BRIDGE PARTNERS

These drawings and specifications contain confidential and proprietary information and are the property of Kapsch TrafficCom USA Inc. and are issued in strict confidence and will be kept confidential and used solely for the purpose intended and for no other purpose and shall not be transmitted, reproduced, copied, and/or used as the basis for manufacture or sale of apparatus unless otherwise agreed to in writing by Kapsch TrafficCom USA Inc.

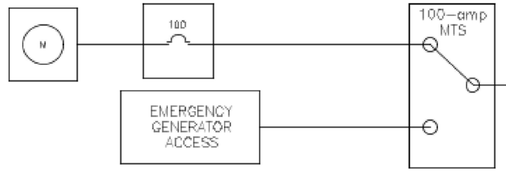

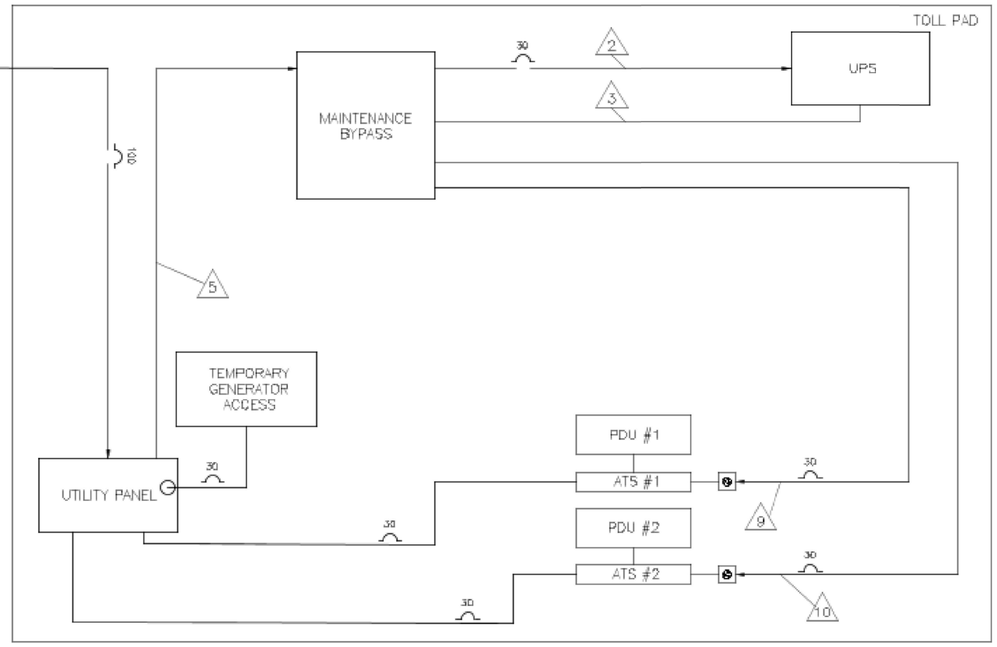

CONDUCTOR SCHEDULE					
RUN #	CONDUIT SIZE (IN.)	CONDUIT QTY	DESCRIPTION	WIRE SIZE (AWG)	WIRE QTY
1			N/A		
2			MAINTENANCE BYPASS SWITCH TO UPS	#2, #8	3, 1
3			UPS TO MAINTENANCE BYPASS SWITCH	#2, #8	3, 1
4			N/A		
5			UTILITY PANEL TO MAINTENANCE BYPASS SWITCH		
6			N/A		
7			N/A		
8			N/A		
9			MAINTENANCE BYPASS TO KAPSCH ATS #1	#10	3
10			MAINTENANCE BYPASS TO KAPSCH ATS #2	#10	3

UTILITY PANEL					
CIRCUIT #	CIRCUIT SIZE	DESCRIPTION	DESCRIPTION	CIRCUIT SIZE	CIRCUIT #
1	30A/2P	UPS	HVAC	15A/2P	2
3					4
5	30A/2P	PDU #1	PDU #2	30A/2P	6
7					8
9	20A/1P	GENERAL USE	TEMPORARY GENERATOR	30A/2P	10
11					12

LEGEND:

- M — SERVICE METER
- 100 — BREAKER SIZE
- L6-30R RECEPTACLE
- ——— EXISTING POWER RUN
- - - - - - - NEW POWER RUN

UNLESS OTHERWISE SPECIFIED: DIMENSIONS ARE IN MILLIMETERS SURFACE FINISH: TOLERANCES: LINEAR: ANGULAR:			FINISH:			DEBUR AND BREAK SHARP EDGES	DO NOT SCALE DRAWING / REVISION
	NAME	SIGNATURE	DATE				kapsch >>>
DRAWN	L. Roloson		Mar 2023				TITLE: Calcasieu Equipment Pad
CHK'D							
APPV'D							
MFG							
Q.A				MATERIAL:			DWG NO. N/A / A3
				WEIGHT:			SCALE:1:50 / SHEET 1 OF 1

SHEET NUMBER 5

PARISH	CONTROL SECTION	STATE PROJECT
CALCASIEU	450-91	H.003931

DESIGN | CHECK | DETAIL | CHECK | REVIEW | SERIES #

TECHNICAL PROPOSAL

PRELIMINARY
NOT FOR CONSTRUCTION

ENGINEER:

LICENSE #:

DATE: 05/10/2023

NO.	DATE	REVISION OR CHANGE ORDER DESCRIPTION	BY

STATE OF LOUISIANA — JOHN BEL EDWARDS — GOVERNOR

AET ZONE
POWER BLOCK DIAGRAM

I-10 CALCASIEU RIVER BRIDGE P3

DOTD — LOUISIANA DEPARTMENT OF TRANSPORTATION & DEVELOPMENT

CBP — CALCASIEU BRIDGE PARTNERS

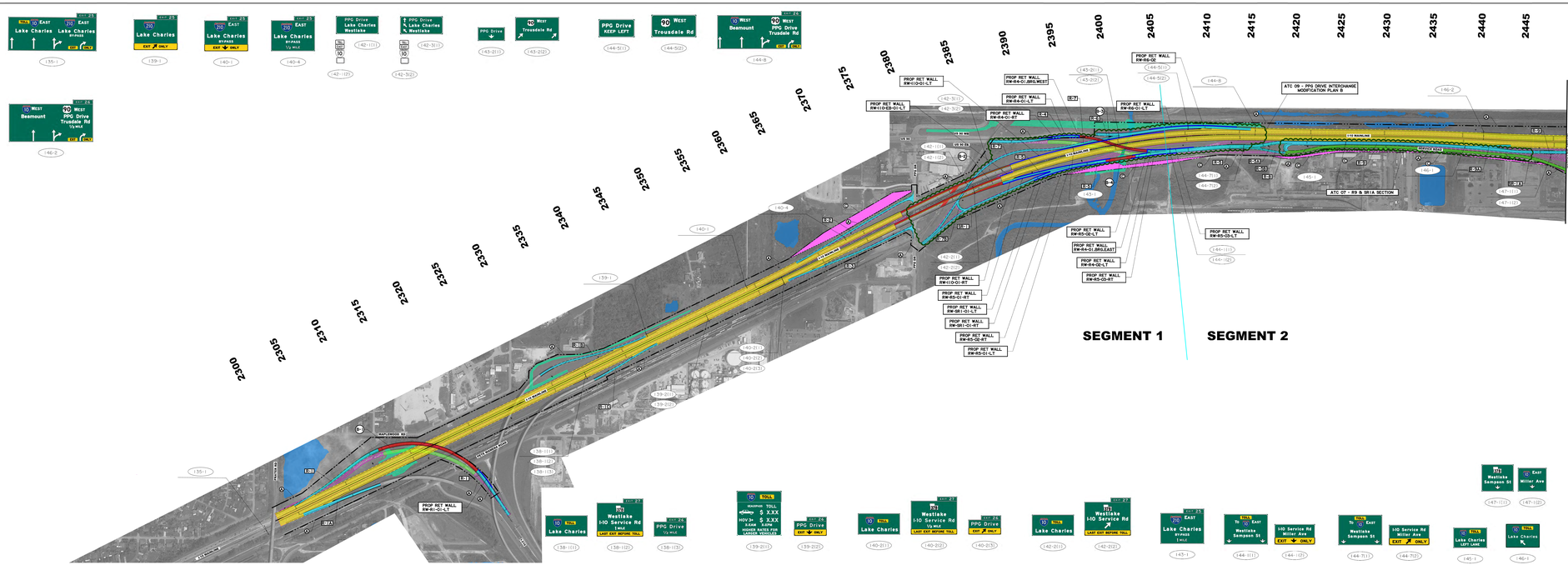
EXIT 25
I-10 EAST
Lake Charles
LA 378
EXIT 25
LA 378 EAST
Lake Charles
EXIT ONLY
EXIT 25
LA 378 EAST
Lake Charles
EXIT ONLY
EXIT 25
LA 378 EAST
Lake Charles
1/2 MILE
PPG Drive
Lake Charles
Westlake
PPG Drive
Lake Charles
Westlake
PPG Drive
KEEP LEFT
I-10 WEST
Beaumont
EXIT 26
I-10 WEST
Beaumont
LA 27 WEST
PPG Drive
Trusdale Rd
1/2 MILE
LA 27 WEST
Trusdale Rd
LA 27 WEST
Trusdale Rd
PROP RET WALL RW-I10-O1-LT
PROP RET WALL RW-I10-O1-RT
PROP RET WALL RW-I10-O2-RT
PROP RET WALL RW-I10-O2-LT
PROP RET WALL RW-I10-O3-RT
PROP RET WALL RW-I10-O3-LT
PROP RET WALL RW-I10-O4-RT
PROP RET WALL RW-I10-O4-LT
PROP RET WALL RW-I10-O5-RT
PROP RET WALL RW-I10-O5-LT
PROP RET WALL RW-I10-O6-RT
PROP RET WALL RW-I10-O6-LT
PROP RET WALL

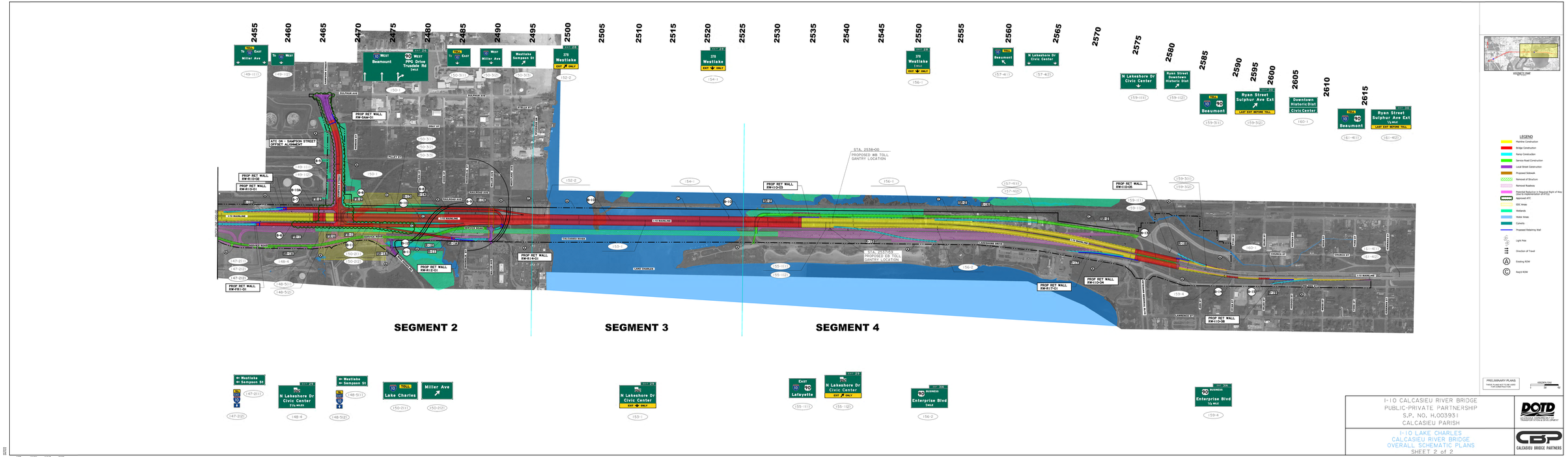

I-10 CALCASIEU RIVER BRIDGE
PUBLIC-PRIVATE PARTNERSHIP
S.P. NO. H.003931
CALCASIEU PARISH

I-10 LAKE CHARLES
CALCASIEU RIVER BRIDGE
OVERALL SCHEMATIC PLANS
SHEET 2 of 2

DOTD
CALCASIEU BRIDGE PARTNERS

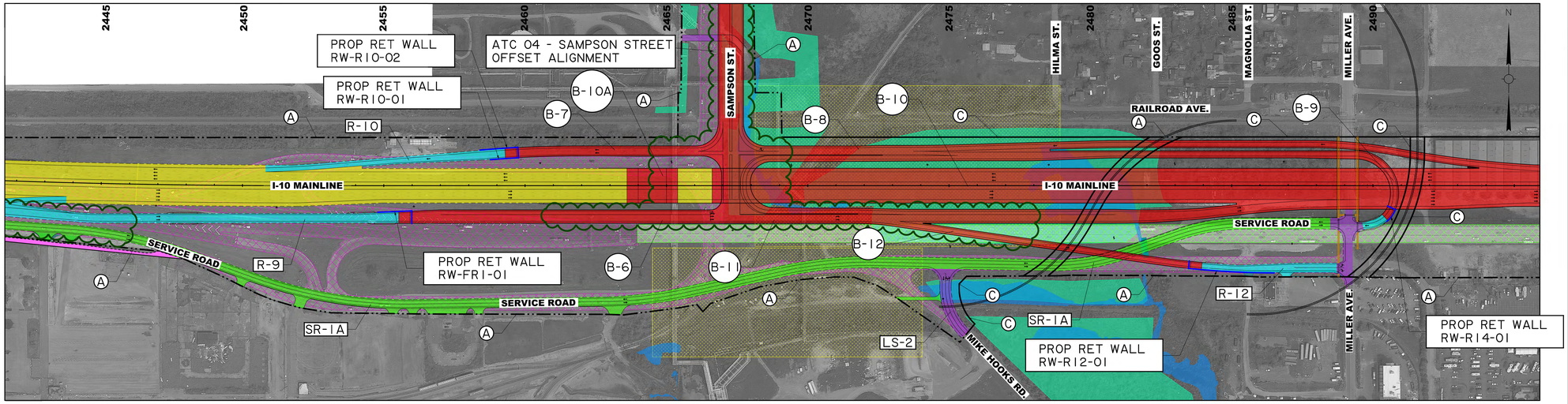

I-10 MAINLINE

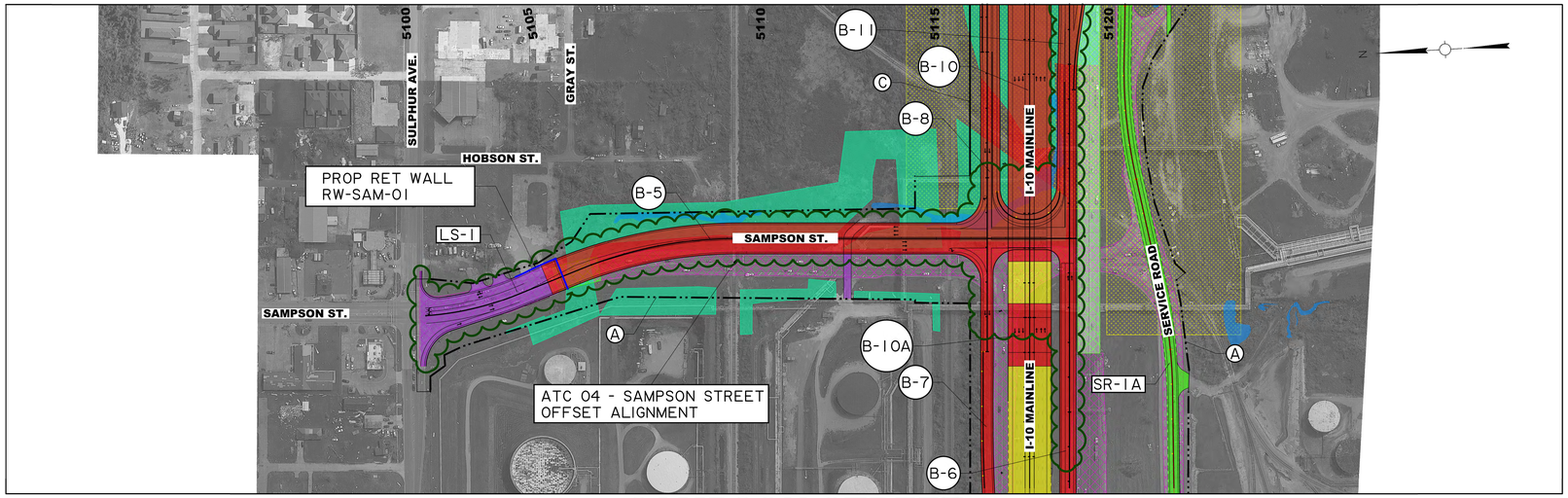

SAMPSON STREET



LEGEND

- Mainline Construction
- Bridge Construction
- Ramp Construction
- Service Road Construction
- Local Street Construction
- Proposed Sidewalk
- Removal of Structure
- Removal Roadway
- Potential Reduction in Required Right of Way (due to implementation of ATCs)
- Approved ATC
- EDC Areas
- Wetlands
- Water Areas
- Culverts
- Proposed Retaining Wall
- Light Pole
- Direction of Travel
- (A) Existing ROW
- (C) Req'd ROW

PRELIMINARY PLANS
THESE PLANS NOT TO BE USED FOR CONSTRUCTION

HORIZONTAL SCALE
0 100 200

I-10 CALCASIEU RIVER BRIDGE
PUBLIC-PRIVATE PARTNERSHIP
S.P. NO. H.003931
CALCASIEU PARISH

DOTD
LOUISIANA DEPARTMENT OF TRANSPORTATION & DEVELOPMENT

I-10 LAKE CHARLES
CALCASIEU RIVER BRIDGE
DETAILED SCHEMATIC PLANS
SHEET 1 of 3

CBP
CALCASIEU BRIDGE PARTNERS

JR/SDW
SPRUNG
JR/SDW 5/24/2013 12:53:18 PEN

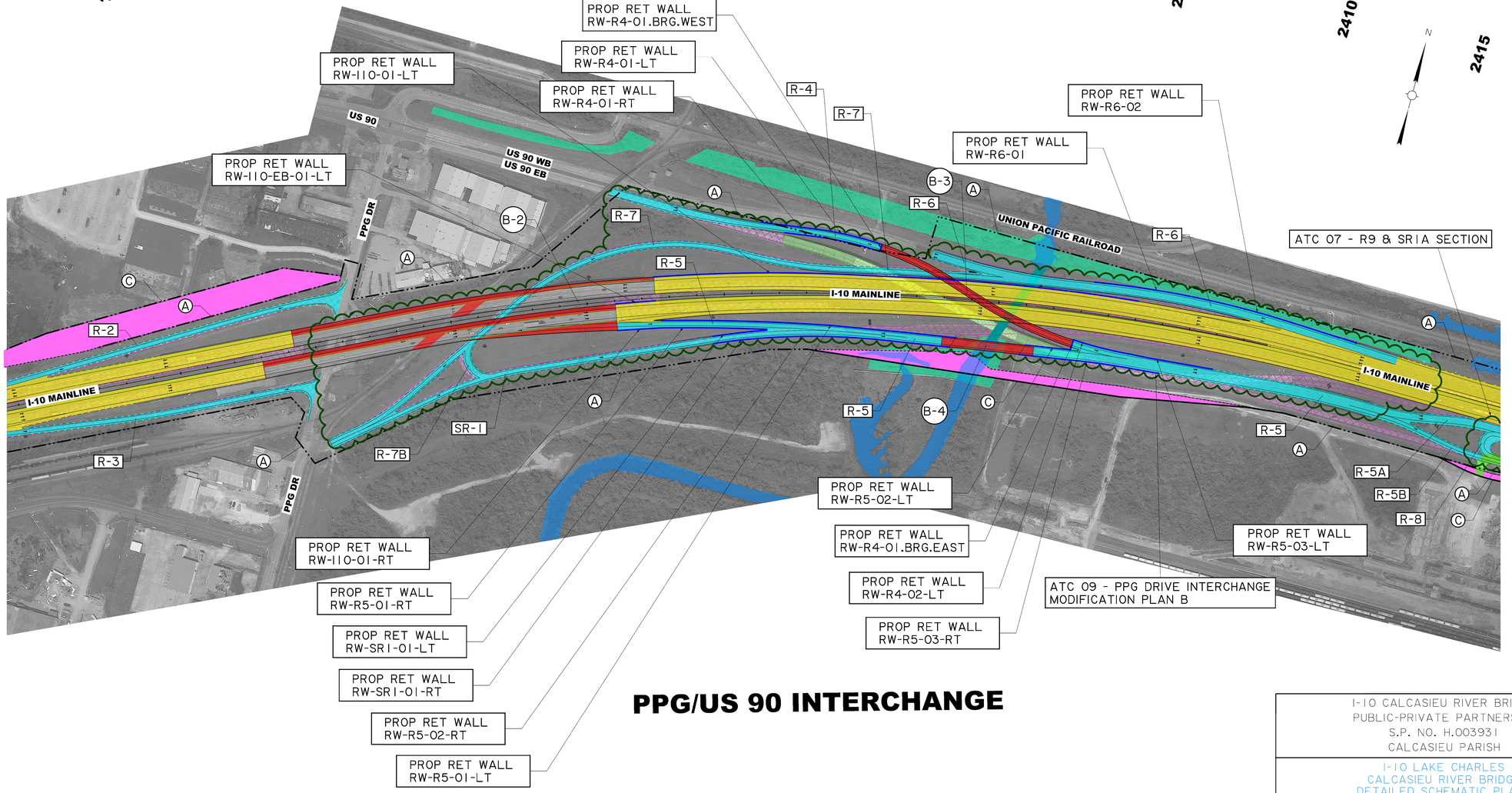

PPG/US 90 INTERCHANGE



VICINITY MAP

LEGEND

- Mainline Construction
- Bridge Construction
- Ramp Construction
- Service Road Construction
- Local Street Construction
- Proposed Sidewalk
- Removal of Structure
- Removal Roadway
- Potential Reduction in Required Right of Way (due to implementation of ATCs)
- Approved ATC
- EDC Areas
- Wetlands
- Water Areas
- Culverts
- Proposed Retaining Wall
- Light Pole
- Direction of Travel
- Existing ROW
- Req'd ROW

PRELIMINARY PLANS
THESE PLANS NOT TO BE USED FOR CONSTRUCTION

HORIZONTAL SCALE
0 100' 200'

I-10 CALCASIEU RIVER BRIDGE
PUBLIC-PRIVATE PARTNERSHIP
S.P. NO. H.003931
CALCASIEU PARISH

DOTD
LOUISIANA DEPARTMENT OF TRANSPORTATION & DEVELOPMENT

I-10 LAKE CHARLES
CALCASIEU RIVER BRIDGE
DETAILED SCHEMATIC PLANS
SHEET 2 of 3

CBP
CALCASIEU BRIDGE PARTNERS

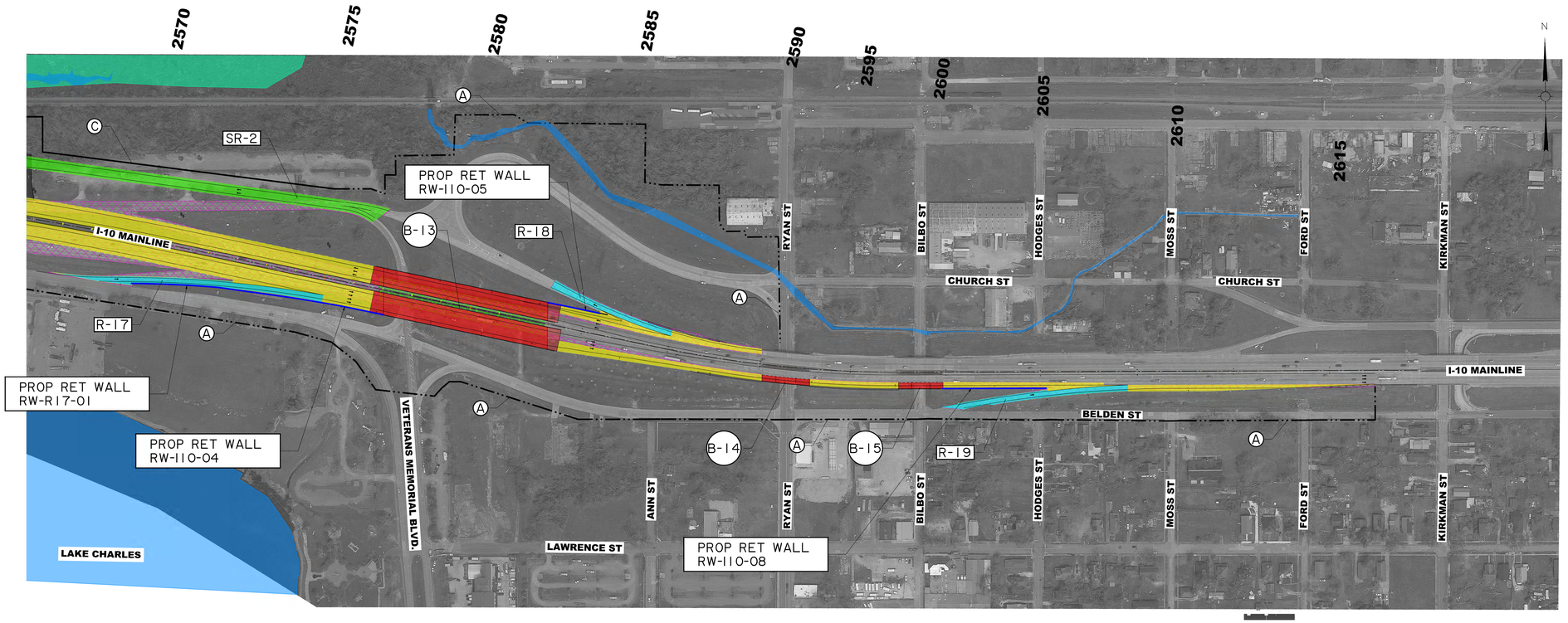



VICINITY MAP

LEGEND

- Mainline Construction
- Bridge Construction
- Ramp Construction
- Service Road Construction
- Local Street Construction
- Proposed Sidewalk
- Removal of Structure
- Removal Roadway
- Potential Reduction in Required Right of Way (due to implementation of ATCs)
- Approved ATC
- EDC Areas
- Wetlands
- Water Areas
- Culverts
- Proposed Retaining Wall
- Light Pole
- Direction of Travel
- Existing ROW
- Req'd ROW

PRELIMINARY PLANS
THESE PLANS NOT TO BE USED FOR CONSTRUCTION

HORIZONTAL SCALE
0 100' 200'

WEST OF THE VETERANS MEMORIAL BRIDGES TO THE EAST TERMINUS

I-10 CALCASIEU RIVER BRIDGE
PUBLIC-PRIVATE PARTNERSHIP
S.P. NO. H.003931
CALCASIEU PARISH

DOTD
LOUISIANA DEPARTMENT OF TRANSPORTATION & DEVELOPMENT

I-10 LAKE CHARLES
CALCASIEU RIVER BRIDGE
DETAILED SCHEMATIC PLANS
SHEET 3 of 3

CBP
CALCASIEU BRIDGE PARTNERS

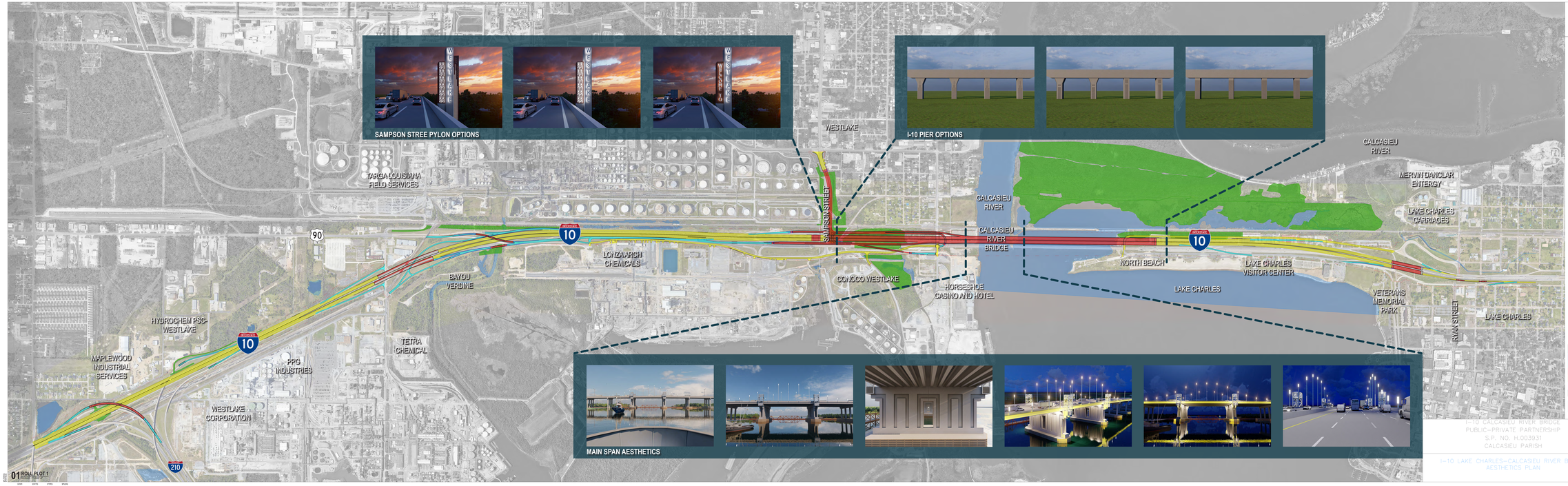
SAMPSON STREE PYLON OPTIONS
I-10 PIER OPTIONS
MAIN SPAN AESTHETICS
WESTLAKE
TARGA LOUISIANA FIELD SERVICES
SAMPSON STREET
CALCASIEU RIVER
CALCASIEU RIVER BRIDGE
CALCASIEU RIVER
MERVIN DANCLAR ENTERGY
LAKE CHARLES CARRIAGES
LONZA ARCH CHEMICALS
BAYOU VERDINE
CONOCO WESTLAKE
HORSESHOE CASINO AND HOTEL
NORTH BEACH
LAKE CHARLES VISITOR CENTER
LAKE CHARLES
VETERANS MEMORIAL PARK
RYAN STREET
LAKE CHARLES
HYDROCHEM PSC-WESTLAKE
MAPLEWOOD INDUSTRIAL SERVICES
PPG INDUSTRIES
TETRA CHEMICAL
WESTLAKE CORPORATION
90
10
210
01 ROLL PLOT 1
02 LEGEND
NEW ROAD CONSTRUCTION
NEW BRIDGE CONSTRUCTION
NEW RAMP CONSTRUCTION
WATER
DELINEATED WETLANDS
RETAINING WALLS
PRELIMINARY PLANS
I-10 CALCASIEU RIVER BRIDGE
PUBLIC–PRIVATE PARTNERSHIP
S.P. NO. H.003931
CALCASIEU PARISH
I-10 LAKE CHARLES–CALCASIEU RIVER BRIDGE
AESTHETICS PLAN
DOTD
CALCASIEU BRIDGE PARTNERS

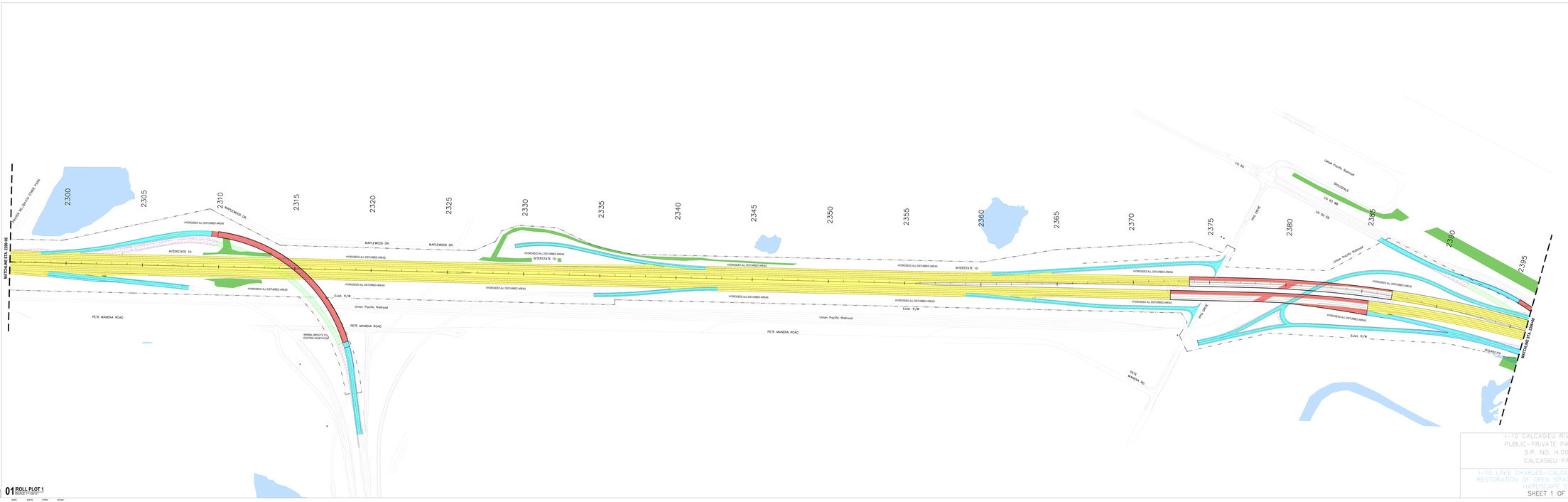



VICINITY MAP

02 LEGEND

SCALE: NTS

	NEW ROAD CONSTRUCTION
	NEW BRIDGE CONSTRUCTION
	NEW RAMP CONSTRUCTION
	REMOVAL OF ROADWAY
	REMOVAL OF STRUCTURE
	DELINEATED WETLANDS
	WATER
	EXISTING TREES
	ANTICIPATED TREES TO BE REMOVED
	REQUIRED FENCE
	RETAINING WALL

PRELIMINARY PLANS

THESE PLANS MUST NOT BE USED FOR CONSTRUCTION

0 10 20

I-10 CALCASIEU RIVER BRIDGE
PUBLIC-PRIVATE PARTNERSHIP
S.P. NO. H.003931
CALCASIEU PARISH

DOTD
DEPARTMENT OF TRANSPORTATION AND DEVELOPMENT

I-10 LAKE CHARLES-CALCASIEU RIVER BRIDGE
RESTORATION OF OPEN SPACE LANDSCAPE AND HARDSCAPE DRAFT

SHEET 1 OF 3

CBP
CALCASIEU BRIDGE PARTNERS

01 ROLL PLOT 1
SCALE: 1"=100'

SCALE: 1"=100'

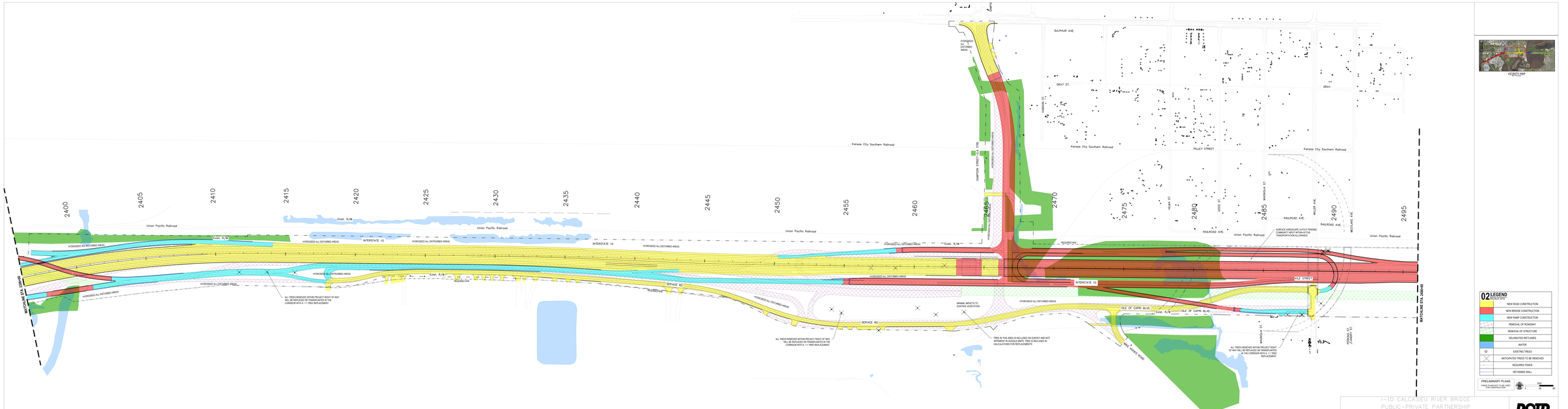

02 LEGEND (BRIDGE SITE)

- NEW ROAD CONSTRUCTION
- NEW BRIDGE CONSTRUCTION
- NEW RAMP CONSTRUCTION
- REMOVAL OF ROADWAY
- REMOVAL OF STRUCTURE
- DELINEATED WETLANDS
- WATER
- EXISTING TREES
- ANTICIPATED TREES TO BE REMOVED
- REQUIRED FENCE
- RETAINING WALL

PRELIMINARY PLANS
THESE PLANS ARE NOT TO BE USED FOR CONSTRUCTION

0 10 20 40

I-10 CALCASIEU RIVER BRIDGE
PUBLIC-PRIVATE PARTNERSHIP
S.P.I. NO. H.003931
CALCASIEU PARISH

I-10 LAKE CHARLES–CALCASIEU RIVER BRIDGE
RESTORATION OF OPEN SPACE, LANDSCAPE, AND HARDSCAPE (DRAFT)

SHEET 2 OF 3

DOTD
LOUISIANA DEPARTMENT OF TRANSPORTATION & DEVELOPMENT

CBP
CALCASIEU BRIDGE PARTNERS

01 ROLL PLOT 2
BY BOXLEY/WEST

USER	DATE	ITEM	STATE

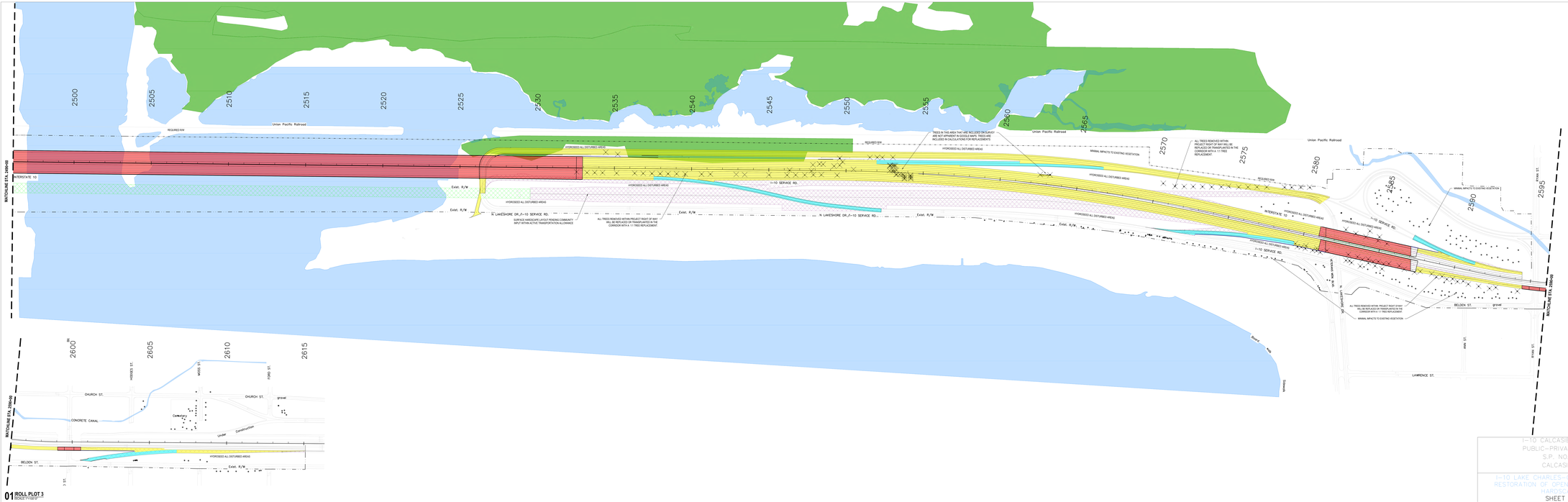

01 ROLL PLOT 3
SCALE: 1"=100'



VICINITY MAP
NOT TO SCALE

02 LEGEND
SCALE: NTS

	NEW ROAD CONSTRUCTION
	NEW BRIDGE CONSTRUCTION
	NEW RAMP CONSTRUCTION
	REMOVAL OF ROADWAY
	REMOVAL OF STRUCTURE
	DELINEATED WETLANDS
	WATER
	EXISTING TREES
	ANTICIPATED TREES TO BE REMOVED
	REQUIRED FENCE
	RETAINING WALL

PRELIMINARY PLANS
THESE PLANS MAY NOT BE USED FOR CONSTRUCTION

0 10 20 30

I-10 CALCASIEU RIVER BRIDGE
PUBLIC-PRIVATE PARTNERSHIP
S.P. NO. H.003931
CALCASIEU PARISH

I-10 LAKE CHARLES-CALCASIEU RIVER BRIDGE
RESTORATION OF OPEN SPACE LANDSCAPE AND HARDSCAPE DRAFT
SHEET 3 OF 3

DOTD
DEPARTMENT OF TRANSPORTATION AND DEVELOPMENT

CBP
CALCASIEU BRIDGE PARTNERS