FOR INFORMATIONAL PURPOSES ONLY

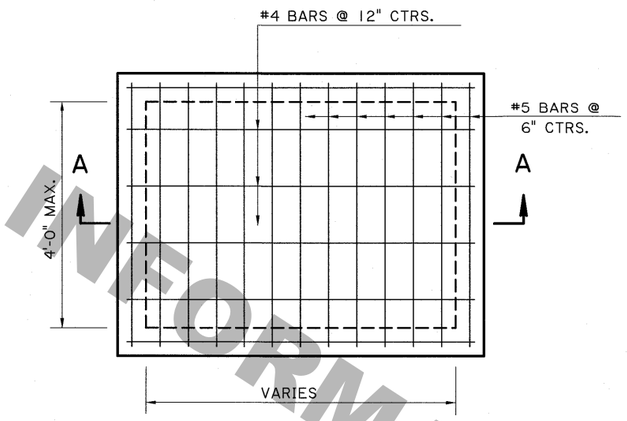

PLAN
SHOWING NEW CONSTRUCTION

GENERAL NOTES:

DIMENSIONS RELATING TO REINFORCED STEEL ARE TO BARS CENTERS.

PROJECT SPECIFICATIONS FOR MANHOLES, JUNCTION BOXES AND CATCH BASINS SHALL APPLY.

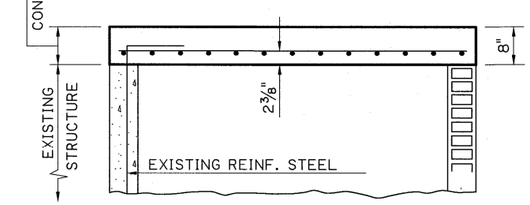

SECTION A-A
SHOWING NEW CONSTRUCTION
(FOR CONCRETE OR BRICK WALL)

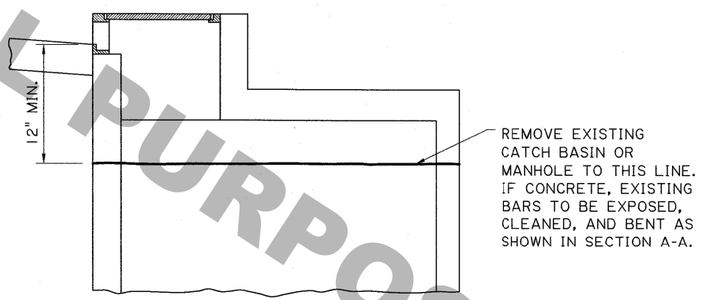

SECTION
EXISTING STRUCTURE

CAPPING EXISTING CATCH BASIN OR MANHOLE

FOR CAPPING AN EXISTING CATCH BASIN OR MANHOLE, THIS DETAIL SHOULD BE INCLUDED IN THE PLANS AND PAID FOR WITH APPROPRIATE PAY ITEM.

STATE OF LOUISIANA
MITRA HASHEMIEH
REG. No. 28546
REGISTERED PROFESSIONAL ENGINEER IN CIVIL ENGINEERING

M. Hashemieh
5/20/2019

NO.	DATE	REVISION DESCRIPTION	BY
5	5-20-19	REVISED NOTES	TL
4	12-22-10	Revised 2 15/16" to 2⅜" dimension in Section A A	WMR
3	9-24-09	REVISED PAY ITEM AND NOTES.	MH
2	7-10-08	REMOVED ITEM NUMBERS	MH
1	8-14-00	NEW SHEET ADDED	JCM

DESIGNED	PAA	
CHECKED		
DETAILED	KAJ	
CHECKED	PAA	
DATE	2-7-90	
SHEET	1 OF 1	

PARISH

FEDERAL PROJECT

STATE PROJECT

SHEET NUMBER

CAPPING EXISTING
CATCH BASIN OR MANHOLE

SPECIAL DETAIL CB-CAP

HYDRAULICS SECTION

R:\Gang035\Hydraulic Standard Plans\CB-Cap\cb-cap.dgn

5/20/2019 10:1