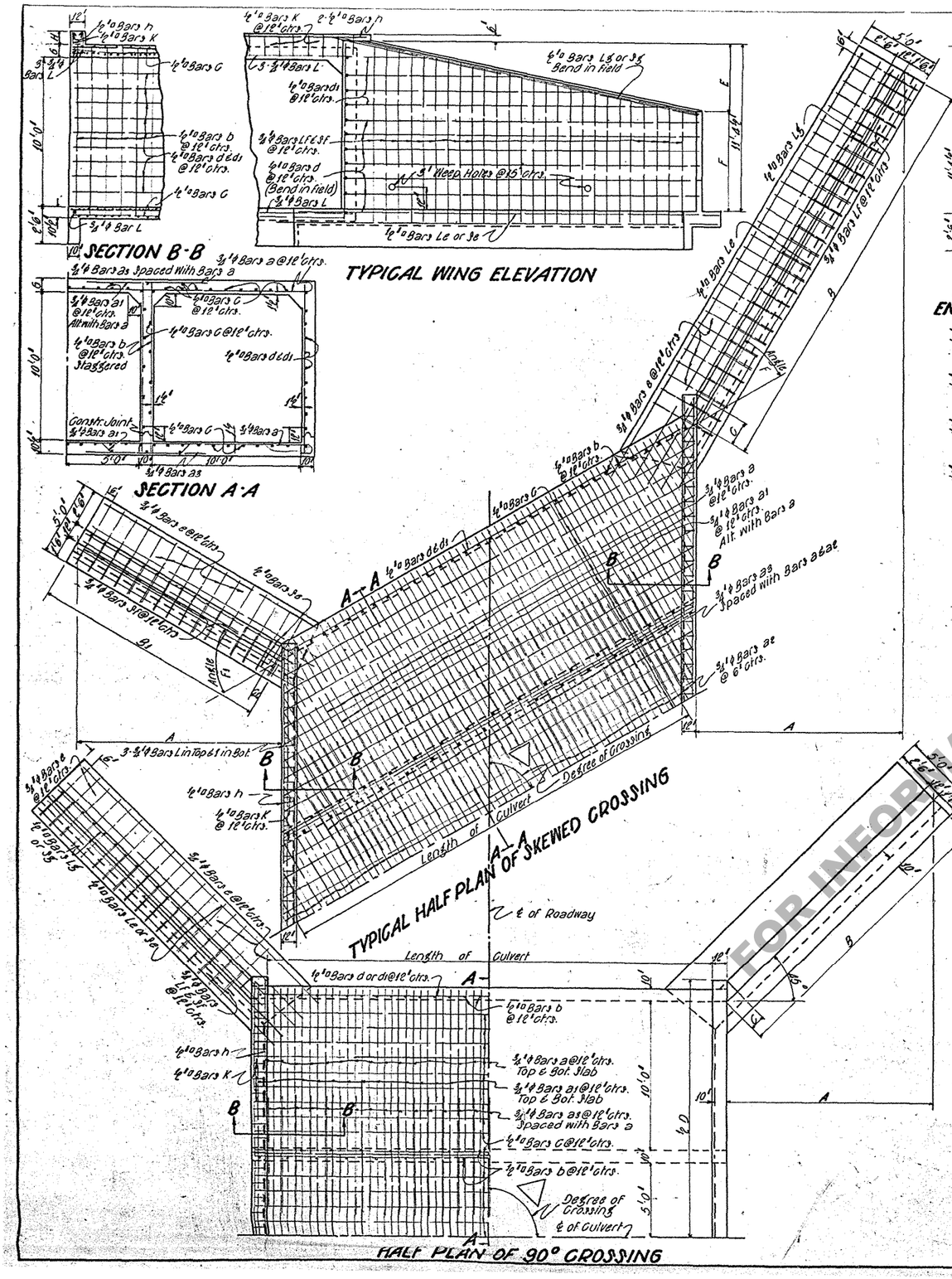

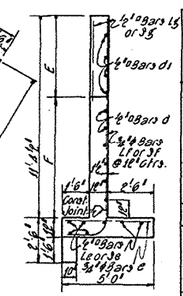

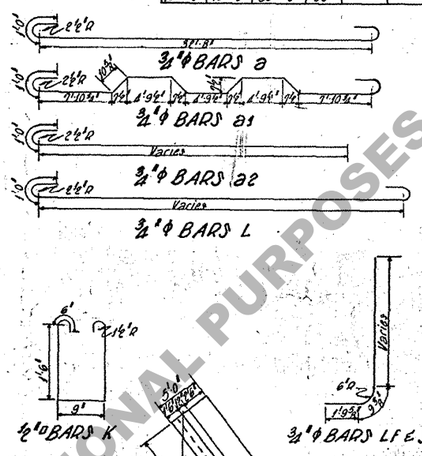

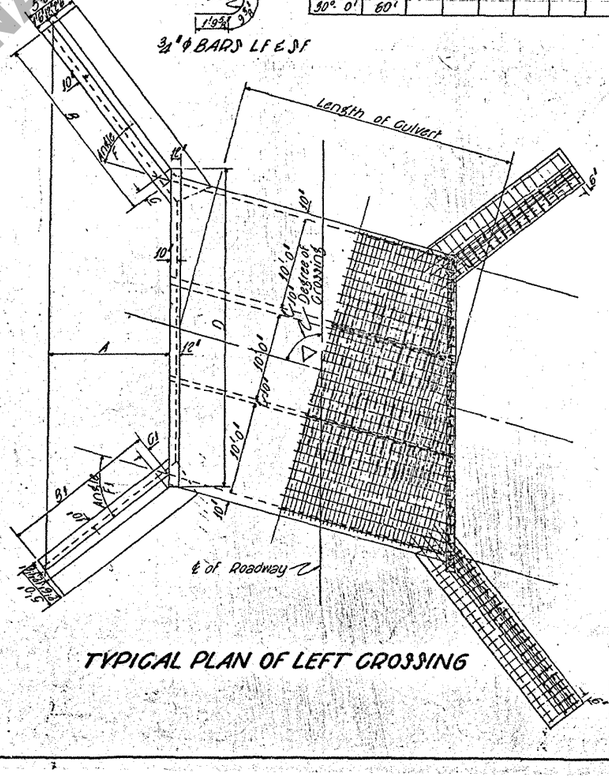

BILL OF REINFORCING STEEL FOR 4:1 SLOPES AND BOTH FILLS

Angle F	Angle F1	Degree of Crossing	Length of Culvert	¾"φ Bars a (No. / Unit L&th)	¾"φ Bars a1 (No. / Unit L&th)	¾"φ Variable Bars a2 (No. Total / Long Short Ea. / No. Bar / Bar)	¾"φ Bars a3 (No. / Unit L&th)	¾"φ Bars b (No. / Unit L&th)	¾"φ Bars C (No. / Unit L&th)	¾"φ Bars d (No. / Unit L&th)	¾"φ Variable Bars d1 (No. Total / Long Short Ea. / No. Bar / Bar)	¾"φ Bars e (No. / Unit L&th)	¾"φ Bars Le (No. / Unit L&th)	¾"φ Variable Bars LF (No. Total / Long Short Ea. / No. Bar / Bar)	¾"φ Variable Bars SF (No. Total / Long Short Ea. / No. Bar / Bar)	¾"φ Bars Lg (No. / Unit L&th)	¾"φ Bars Sg (No. / Unit L&th)	¾"φ Bars h (No. / Unit L&th)	¾"φ Bars K (No. / Unit L&th)	¾"φ Bars L (No. / Unit L&th)
45° 0'	45° 0'	90° 0'	30'	62 34'8"	64 35'9"	- - - -	124 8'-0"	128 11'-6"	92 31'9"	16 15'-6"	2 6 71'-0" 49'-6"	88 6'-9"	24 24'-6"	- -	4 88 14'-2" 10'-6"	- - - -	- -	8 23'-2"	- -	4 34'-3" 68 4'-9"	- -
41° 15'	48° 45'	82° 30'	30'																		
37° 30'	52° 30'	75° 0'	31'																		
33° 45'	56° 15'	67° 30'	32'																		
30° 0'	60° 0'	60° 0'	35'	38 36'-8"	36 35'-9"	4 144 32'-10 2'-6"	188 8'-0"	192 11'-6"	92 37'-0"	16 36'-8"	2 6 81'-7" 36'-6"	102 4'-3"	12 34'-0"	12 20'-6"	2 62 14'-2" 10'-6"	2 36 14'-2" 10'-6"	4 32'-6"	4 19'-6"	4 39'-6"	78 4'-3"	8 35'-9"
26° 15'	63° 45'	52° 30'	38'																		
22° 30'	67° 30'	45° 0'	42'																		
18° 45'	71° 15'	37° 30'	49'																		
15° 0'	75° 0'	30° 0'	60'																		

BILL OF REINFORCING STEEL FOR 3:1 SLOPES AND BOTH FILLS

F	F1	Degree of Crossing	Length of Culvert	¾"φ Bars a (No. / Unit L&th)	¾"φ Bars a1 (No. / Unit L&th)	¾"φ Variable Bars a2 (No. Total / Long Short Ea. / No. Bar / Bar)	¾"φ Bars a3 (No. / Unit L&th)	¾"φ Bars b (No. / Unit L&th)	¾"φ Bars C (No. / Unit L&th)	¾"φ Bars d (No. / Unit L&th)	¾"φ Variable Bars d1 (No. Total / Long Short Ea. / No. Bar / Bar)	¾"φ Bars e (No. / Unit L&th)	¾"φ Bars Le (No. / Unit L&th)	¾"φ Variable Bars LF (No. Total / Long Short Ea. / No. Bar / Bar)	¾"φ Variable Bars SF (No. Total / Long Short Ea. / No. Bar / Bar)	¾"φ Bars Lg (No. / Unit L&th)	¾"φ Bars Sg (No. / Unit L&th)	¾"φ Bars h (No. / Unit L&th)	¾"φ Bars K (No. / Unit L&th)	¾"φ Bars L (No. / Unit L&th)
45° 0'	45° 0'	90° 0'	30'																	
41° 15'	48° 45'	82° 30'	30'																	
37° 30'	52° 30'	75° 0'	31'																	
33° 45'	56° 15'	67° 30'	32'																	
30° 0'	60° 0'	60° 0'	35'																	
26° 15'	63° 45'	52° 30'	38'																	
22° 30'	67° 30'	45° 0'	42'	22 34'8"	24 35'9"	4 144 32'-10 2'-6"	152 8'-0"	180 11'-6"	92 36'-6"	14 37'-6"	2 8 34'-9" 62'-8"	94 4'-9"	12 23'-0"	12 17'-3"	2 66 14'-0" 9'-6"	2 28 14'-0" 9'-9"	4 37'-6"	4 19'-0"	4 30'-0"	94 4'-9"	8 34'-0"
18° 45'	71° 15'	37° 30'	49'																	
15° 0'	75° 0'	30° 0'	60'																	

* Allows for 1 Lap Splice ° Allows for 2 Lap Splices

DIMENSIONS AND QUANTITIES

Degree of Crossing	Length of Culvert	4:1 SLOPES A	B	B1	C	C1	D	E	F	6' FILL G	H	Total Quantities Conc. Cu.Yds.	Steel Lbs.	Per Lin. Foot of Barrel Conc. Cu.Yds.	Steel Lbs.	10' FILL G	H	Total Quantities Conc. Cu.Yds.	Steel Lbs.	Per Lin. Foot of Barrel Conc. Cu.Yds.	Steel Lbs.
90° 0'	30'	15'-2"	21'-5⅞"	21'-5⅞"	1'-0"	1'-0"	34'-6"	3'-9½"	7'-7"	10½'	12	16.700	16516	3.4722	395.6	1'-0½'	10'	173.16	16516	3.6780	395.6
82° 30'	30'									/	/			/	/	/	/			/	/
75° 0'	31'									/	/			/	/	/	/			/	/
67° 30'	32'									/	/			/	/	/	/			/	/
60° 0'	35'	15'-2"	30'-4"	17'-6"	1'-8⅜"	0'-6⅜"	35'-8⅜"	3'-9½"	7'-7"	/	/	194.00	20078	/	/	/	/	201.19	20078	3.6780	/
52° 30'	38'									/	/			/	/	/	/			/	/
45° 0'	42'									/	/			/	/	/	/			/	/
37° 30'	49'									/	/			/	/	/	/			/	/
30° 0'	60'									/	/			/	/	/	/			/	/

Degree of Crossing	Length of Culvert	3:1 SLOPES								6' FILL G	H	Total Quantities Conc. Cu.Yds.	Steel Lbs.	Per Lin. Foot of Barrel Conc. Cu.Yds.	Steel Lbs.	10' FILL G	H	Total Quantities Conc. Cu.Yds.	Steel Lbs.	Per Lin. Foot of Barrel Conc. Cu.Yds.	Steel Lbs.
90° 0'	30'									10½'	12			3.4722	395.6	1'-0½'	10'				395.6
82° 30'	30'									/	/			/	/	/	/			/	/
75° 0'	31'									/	/			/	/	/	/			/	/
67° 30'	32'									/	/			/	/	/	/			/	/
60° 0'	35'									/	/			/	/	/	/			/	/
52° 30'	38'									/	/			/	/	/	/			/	/
45° 0'	42'	19'-7½"	35'-8"	14'-9½"	2'-5'	0'-5'	48'-5⅜"	4'-6⅜"	6'-10⅜"	/	/	223.84	23,592	/	/	/	/	232.47	23592	3.6780	/
37° 30'	49'									/	/			/	/	/	/			/	/
30° 0'	60'									/	/			/	/	/	/			/	/

Specifications

Construction - Latest Approved La. Hwy. Dept. Specs.
Design - La. Hwy. Commission. Feb. 1929

General Notes:

1. Louisiana Highway Commission Specifications shall govern.
2. All Concrete shall be Class 'A'.
4. All Exposed Corners shall have a ¾" Chamfer.
5. All Reinforcing Steel shall be deformed bars.
6. All Splices shall be a minimum of 40 diams.
7. About one (1) cu. ft. of loose rock or large size gravel shall be placed around and behind each Weep Hole.
8. For Year Plate see Standard Plan C M 97.
9. 8" Diam. Weep Holes shall be placed at 15' intervals in outside walls of Barrel as well as in Wing Walls.

DISCARDED
3-7-57
CEA

DATE	DESCRIPTION	BY
1-46	Gen. Notes & No.	
4-28-41	90°-4:1 (10' fill) 82°30'-4:1 (10' fill) 45°-3:1 (10' fill) Added	J.T.H.
4-3-1941	60°-3:1 (6' fill) Added	J.T.H.
10-19-38	45° 3:1 Checked	W.O.E.

REVISIONS

STANDARD PLAN
TRIPLE 10'x10' R.C. CULVERT
90°, 82°30', 75°, 67°30, 60°, 52°30', 45°, 37°30' & 30° CROSSINGS
6' & 10' FILLS & 4:1 & 3:1 SLOPES

LOUISIANA HIGHWAY COMMISSION
BATON ROUGE, LA. October 1938

DESIGNED	DETAILED I.D.P.	TRACED I.D.P. & J.H.J.	
CHECKED	CHECKED	CHECKED	
IN CHARGE OF	BRIDGE DESIGNING ENGINEER		

C-C-302-15

FOR INFORMATIONAL PURPOSES ONLY