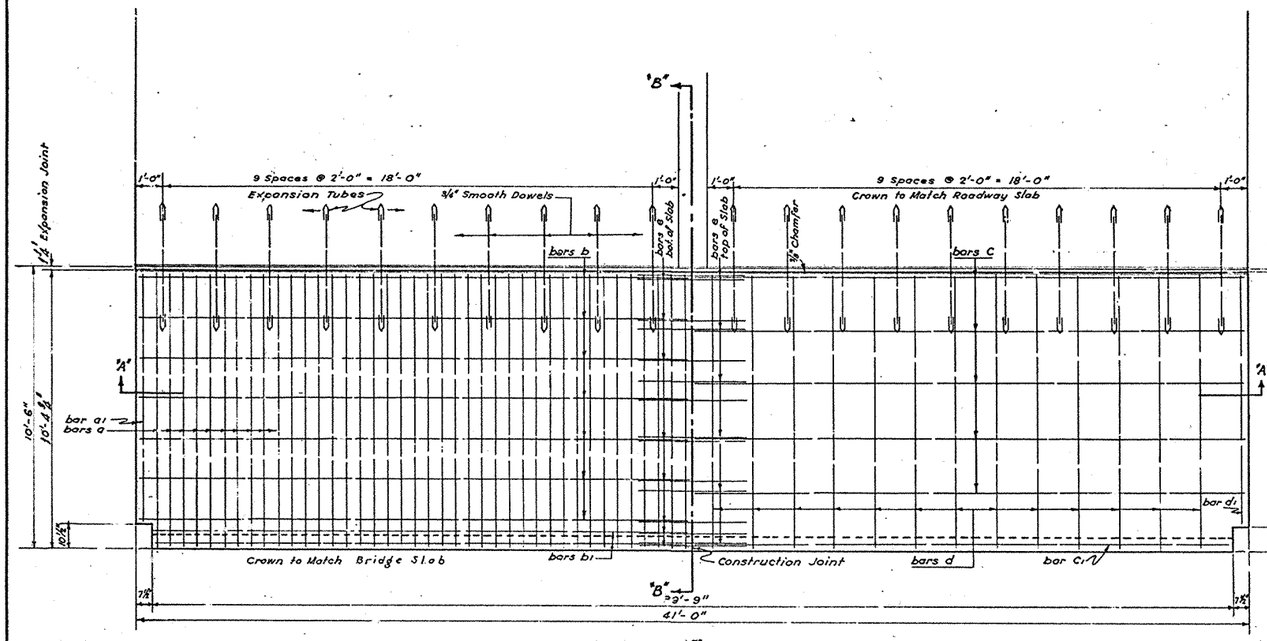

HALF PLAN
SHOWING REINFORCING IN BOTTOM OF SLAB

HALF PLAN
SHOWING REINFORCING IN TOP OF SLAB

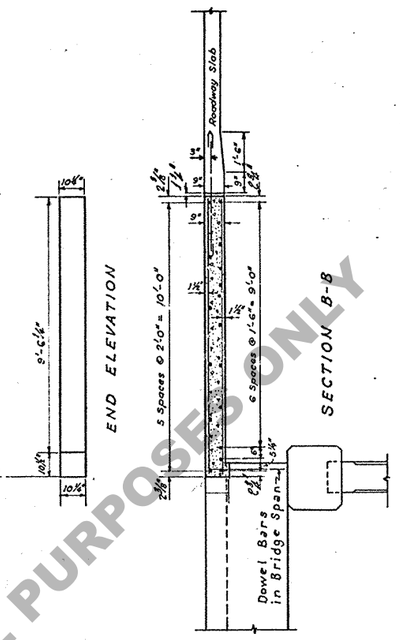

BILL OF REINFORCING STEEL FOR ONE APPROACH SLAB						
MARK	SIZE	SPACING	No. REQUIRED	LENGTH UNIT	LENGTH TOTAL	WEIGHT POUNDS
Dowels	3/4" ϕ	2'-0"	20	4'-0"	80'-0"	
TOTAL 3/4" ϕ BARS =					80'-0"	120.16
a	5/8" ϕ	6"	80	10'-2"	813'-4"	
a1	"	6"	2	9'-2"	18'-4"	
TOTAL 5/8" ϕ BARS =					831'-8"	867.43
b	1/2" □	1'-6"	14	20'-3"	283'-6"	
b1	"	5 1/8"	4	19'-7"	78'-4"	
c	"	2'-0"	10	20'-3"	202'-6"	
c1	"	2'-0"	2	19'-7"	39'-2"	
d	"	1'-6"	26	10'-2"	264'-4"	
d1	"	1'-6"	2	9'-2"	18'-4"	
e	"	(See Plan)	15	4'-0	60'-0"	
TOTAL 1/2" □ BARS =					946'-2"	804.24
TOTAL REINFORCING STEEL						1792

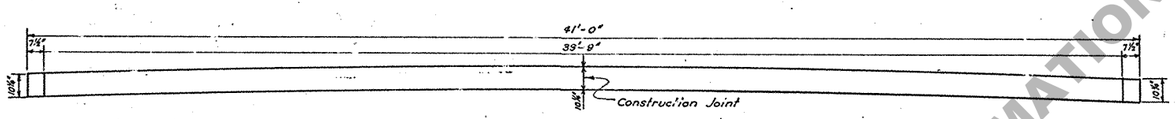

ELEVATION

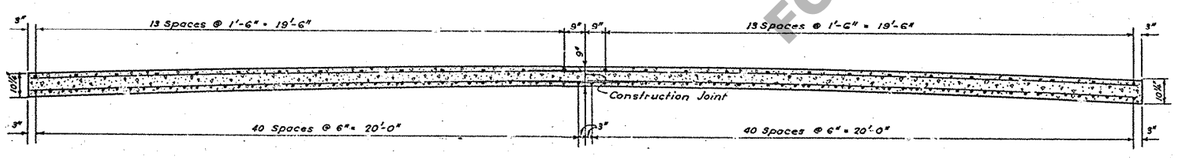

SECTION A-A

GENERAL NOTES

1. La. Highway Commission Specifications shall govern.
2. Concrete shall be Class "A-A"
3. All Reinforcing Steel shall be deformed bars, excepting the 3/4"x 4'-0" Dowels, which shall be round and smooth.
4. The Sub-Grade shall be prepared as described in Pamphlet "G", Paragraph 36.31.
5. The slab shall be finished as described in Pamphlet "G", Paragraph 36.32, except that no finishing machine shall be required.
6. The slab shall be protected and cured as described in Pamphlet "G," Paragraphs, 36.34, 36.35, & 36.36.
7. The entire length of the 3/4" ϕ dowel bars shall be dipped in heavy oil or painted with grease prior to placing.
8. No direct payment will be made for the 40 Expansion Tubes; cost of same shall be included in unit bid price for deformed steel.

QUANTITIES FOR ONE APPROACH SLAB		
ITEM	UNIT	QUANTITY
Class "A A" Concrete	Cu. Yds.	12.3
Reinforcing Steel	Pounds	1792

VOID

VOID

STANDARD PLAN
10' CONCRETE APPROACH SLAB
FOR STEEL OR CONCRETE BRIDGES
WITH 40' ROADWAY

LOUISIANA HIGHWAY COMMISSION
BATON ROUGE, LA. AUGUST 1934

Date	Description	By
11-1-38	Exp. Joint	JHJ

REVISIONS

Designed J.R. Pray | Detailed J.R. Pray | Traced Fred L. Marcel
Checked | Approved | Checked
In Charge of | Bridge Designing Engineer

C-M-19-A

FOR INFORMATIONAL PURPOSES ONLY