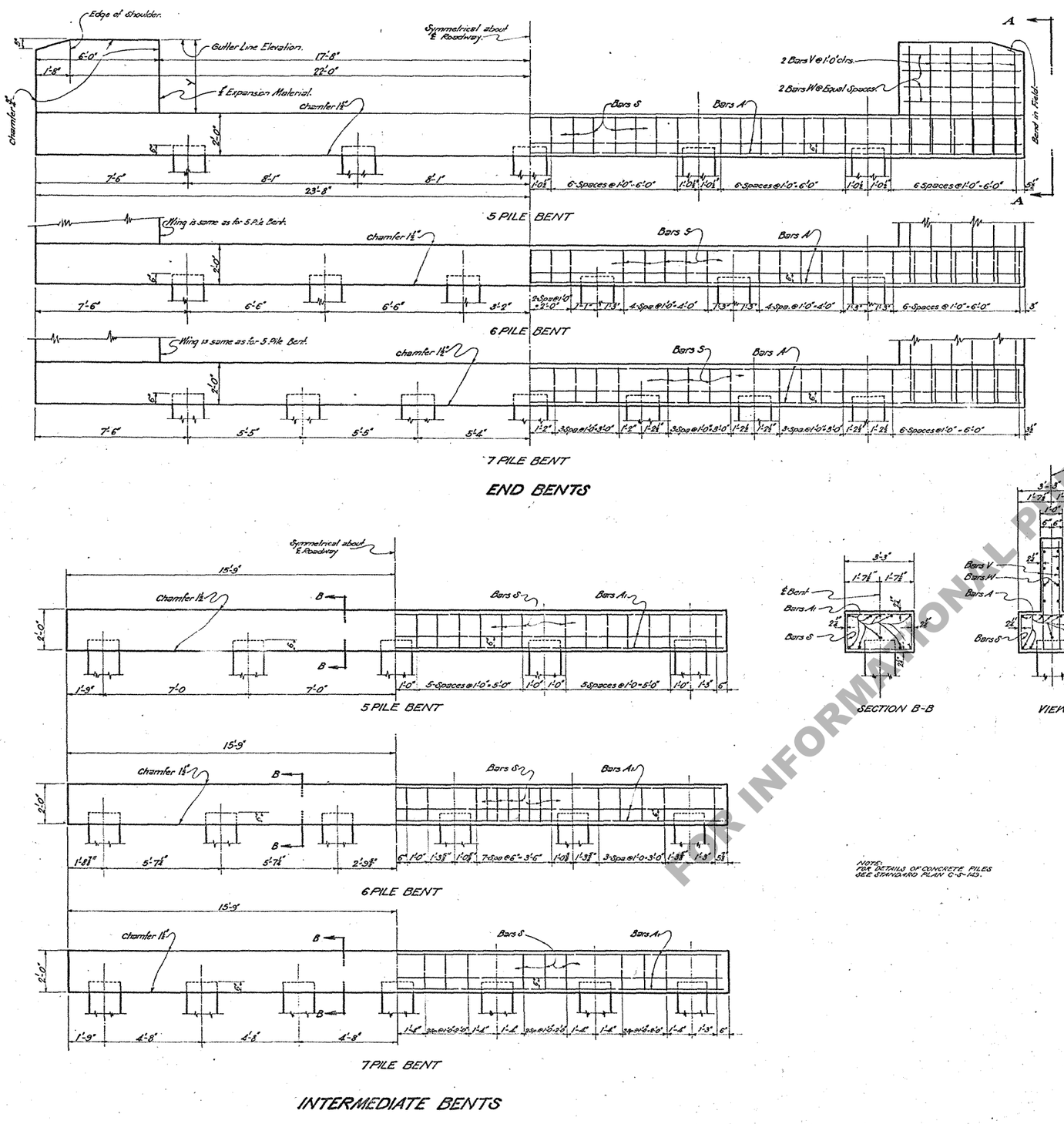


## END BENTS




## INTERMEDIATE BENTS

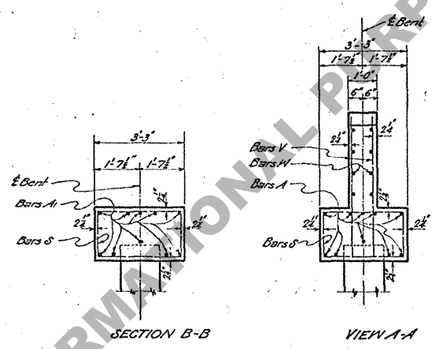


NOTE:
FOR DETAILS OF CONCRETE PILES SEE STANDARD PLAN C-S-143.

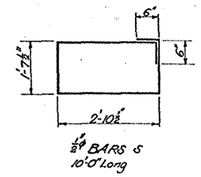


½ BARS S
10'-0" Long

| SPAN | Y |
|---|---|
| 30 FT. | 3'-4" |
| 32 FT. | 3'-5" |
| 34 FT. | 3'-7" |
| 36 FT. | 3'-9" |
| 38 FT. | 3'-10" |
| 40 FT. | 4'-0" |

## END BENTS ~ 30 TO 40 FT. SPANS

| 30 FT. SPAN BAR | NO. | SIZE | UNIT LENGTH | TOTAL LENGTH |
|---|---|---|---|---|
| S 5 Pile Bent | 42 | ½" φ | 10'-0" | 420'-0" |
| S 6 Pile Bent | 33 | " | 10'-0" | 330'-0" |
| V | 24 | " | 5'-1" | 120'-0" |
| W | 16 | " | 5'-8" | 90'-8" |
| Total ½" φ Bars | 5 Pile Bent 630'-8" = 421 # | | | |
| | 6 Pile Bent 600'-8" = 401 # | | | |
| A 5 Pile Bent | 10 | 1¼" | 47'-0" | 470'-0" |
| A 6 Pile Bent | 10 | 1¼" | 47'-0" | 470'-0" |
| Total 1¼" Bars | 5 Pile Bent = 470'-0" = 2497 # | | | |
| Total 1¼" Bars | 6 Pile Bent = 470'-0" = 2497 # | | | |
| 5 Pile Bent | Class "A" Conc. = 12.69 Cu Yds. | | | |
| | Reinf. Steel = 2918 Lbs. | | | |
| 6 Pile Bent | Class "A" Conc. = 12.65 Cu Yds. | | | |
| | Reinf. Steel = 2898 Lbs. | | | |

| 32 FT. SPAN BAR | NO. | SIZE | UNIT LENGTH | TOTAL LENGTH |
|---|---|---|---|---|
| S 5 Pile Bent | 42 | ½" φ | 10'-0" | 420'-0" |
| S 6 Pile Bent | 33 | " | 10'-0" | 330'-0" |
| S 7 Pile Bent | 38 | " | 10'-0" | 380'-0" |
| V | 24 | " | 5'-1" | 123'-0" |
| W | 16 | " | 5'-8" | 90'-8" |
| Total ½" φ Bars | 5 Pile Bent 632'-8" = 423 # | | | |
| | 6 Pile Bent 602'-8" = 403 # | | | |
| | 7 Pile Bent 592'-8" = 396 # | | | |
| A 5 Pile Bent | 10 | 1¼" | 47'-0" | 470'-0" |
| A 6 Pile Bent | 10 | 1¼" | 47'-0" | 470'-0" |
| A 7 Pile Bent | 10 | 1¼" | 47'-0" | 470'-0" |
| Total 1¼" Bars | 5 Pile Bent = 470'-0" = 2497 # | | | |
| Total 1¼" Bars | 6 Pile Bent = 470'-0" = 2497 # | | | |
| Total 1¼" Bars | 7 Pile Bent = 470'-0" = 2497 # | | | |
| 5 Pile Bent | Class "A" Conc. = 12.79 Cu Yds. | | | |
| | Reinf. Steel = 2920 Lbs. | | | |
| 6 Pile Bent | Class "A" Conc. = 12.69 Cu Yds. | | | |
| | Reinf. Steel = 2900 Lbs. | | | |
| 7 Pile Bent | Class "A" Conc. = 12.66 Cu Yds. | | | |
| | Reinf. Steel = 2893 Lbs. | | | |

| 34 FT. SPAN BAR | NO. | SIZE | UNIT LENGTH | TOTAL LENGTH |
|---|---|---|---|---|
| | | ½" φ | | |
| S 5 Pile Bent | 39 | " | 10'-0" | 390'-0" |
| S 7 Pile Bent | 38 | " | 10'-0" | 380'-0" |
| V | 24 | " | 5'-3" | 126'-0" |
| W | 16 | " | 5'-8" | 90'-8" |
| Total ½" φ Bars | 5 Pile Bent 606'-8" = 405 # | | | |
| | 7 Pile Bent 596'-8" = 399 # | | | |
| A 5 Pile Bent | 10 | 1¼" | 47'-0" | 470'-0" |
| A 7 Pile Bent | 10 | 1¼" | 47'-0" | 470'-0" |
| Total 1¼" Bars | 5 Pile Bent = 470'-0" = 2497 # | | | |
| Total 1¼" Bars | 7 Pile Bent = 470'-0" = 2497 # | | | |
| 5 Pile Bent | Class "A" Conc. = 12.78 Cu Yds. | | | |
| | Reinf. Steel = 2902 Lbs. | | | |
| 7 Pile Bent | Class "A" Conc. = 12.73 Cu Yds. | | | |
| | Reinf. Steel = 2896 Lbs. | | | |

| 36 FT. SPAN BAR | NO. | SIZE | UNIT LENGTH | TOTAL LENGTH |
|---|---|---|---|---|
| S 5 Pile Bent | 39 | ½" φ | 10'-0" | 390'-0" |
| S 7 Pile Bent | 38 | ½" φ | 10'-0" | 380'-0" |
| V | 24 | ½" φ | 5'-5" | 130'-0" |
| W | 16 | ½" φ | 5'-8" | 90'-8" |
| Total ½" φ Bars | 5 Pile Bent 610'-8" = 408 # | | | |
| | 7 Pile Bent 600'-8" = 401 # | | | |
| A 5 Pile Bent | 10 | 1¼" | 47'-0" | 470'-0" |
| A 7 Pile Bent | 10 | 1¼" | 47'-0" | 470'-0" |
| Total 1¼" Bars | 5 Pile Bent = 470'-0" = 2497 # | | | |
| Total 1¼" Bars | 7 Pile Bent = 470'-0" = 2497 # | | | |
| 5 Pile Bent | Class "A" Conc. = 12.84 Cu yds. | | | |
| | Reinf. Steel = 2905 Lbs. | | | |
| 7 Pile Bent | Class "A" Conc. = 12.81 Cu Yds. | | | |
| | Reinf. Steel = 2898 Lbs. | | | |

| 38 FT. SPAN BAR | NO. | SIZE | UNIT LENGTH | TOTAL LENGTH |
|---|---|---|---|---|
| S 5 Pile Bent | 39 | " | 10'-0" | 390'-0" |
| S 7 Pile Bent | 38 | " | 10'-0" | 380'-0" |
| V | 24 | " | 5'-6" | 132'-0" |
| W | 16 | " | 5'-8" | 90'-8" |
| Total ½" φ Bars | 5 Pile Bent 612'-8" = 409 # | | | |
| | 7 Pile Bent 602'-8" = 403 # | | | |
| A 5 Pile Bent | 10 | 1¼" | 47'-0" | 470'-0" |
| A 7 Pile Bent | 10 | 1¼" | 47'-0" | 470'-0" |
| Total 1¼" Bars | 5 Pile Bent = 470'-0" = 2497 # | | | |
| Total 1¼" Bars | 7 Pile Bent = 470'-0" = 2497 # | | | |
| 5 Pile Bent | Class "A" Conc. = 12.89 cu yds. | | | |
| | Reinf. Steel = 2906 Lbs. | | | |
| 7 Pile Bent | Class "A" Conc. = 12.86 Cu Yds. | | | |
| | Reinf. Steel = 2900 Lbs. | | | |

| 40 FT. SPAN BAR | NO. | SIZE | UNIT LENGTH | TOTAL LENGTH |
|---|---|---|---|---|
| S 5 Pile Bent | 39 | " | 10'-0" | 390'-0" |
| S 7 Pile Bent | 38 | " | 10'-0" | 380'-0" |
| V | 24 | " | 5'-8" | 136'-0" |
| W | 16 | " | 5'-8" | 90'-8" |
| Total ½" φ Bars | 5 Pile Bent 616'-8" = 412 # | | | |
| | 7 Pile Bent = 606'-8" = 405 # | | | |
| A 5 Pile Bent | 10 | 1¼" | 47'-0" | 470'-0" |
| A 7 Pile Bent | 10 | 1¼" | 47'-0" | 470'-0" |
| Total 1¼" Bars | 5 Pile Bent = 470'-0" = 2497 # | | | |
| Total 1¼" Bars | 7 Pile Bent = 470'-0" = 2497 # | | | |
| 5 Pile Bent | Class "A" Conc. = 12.95 cu yds. | | | |
| | Reinf. Steel = 2909 Lbs. | | | |
| 7 Pile Bent | Class "A" Conc. = 12.92 Cu Yds. | | | |
| | Reinf. Steel = 2902 Lbs. | | | |

## INTERMEDIATE BENTS

| BAR | SIZE | NO. | UNIT LENGTH | TOTAL LENGTH | LOCATION |
|---|---|---|---|---|---|
| **5 PILE BENT** | | | | | |
| S | ½" φ | 26 | 10'-0" | 260'-0" | Hoops in Cap. |
| Total ½" φ Bars | | = 260'-0" | | = 174 Lbs. | |
| A1 | 1¼" | 10 | 31'-2" | 311'-8 | Cap. |
| Total 1¼" Bars | | = 311'-8 | | | 1060 Lbs. |
| Class "A" Concrete = | | | | | 7.42 Cu Yds. |
| Reinforcing Steel = | | | | | 1234 Lbs. |
| **6 PILE BENT** | | | | | |
| S | ½" φ | 30 | 10'-0" | 300'-0" | Hoops in Cap. |
| Total ½" φ Bars | | = 300'-0" = | | | 200 Lbs. |
| A1 | 1¼" | 10 | 31'-2" | 311'-8" | Cap. |
| Total 1¼" Bars | | = 311'-8 = | | | 1656 Lbs. |
| Class "A" Concrete = | | | | | 7.39 Cu Yds. |
| Reinf. Steel = | | | | | 1856 Lbs. |
| **7 PILE BENT** | | | | | |
| S | ½" φ | 20 | 10'-0" | 200'-0" | Hoops in Cap. |
| Total ½" φ Bars | | = 200'-0" = | | | 134 Lbs. |
| A1 | 1¼" | 10 | 31'-2" | 311'-8" | Cap. |
| Total 1¼" Bars | | = 311'-8 = | | | 1060 Lbs. |
| Class "A" Concrete = | | | | | 7.35 Cu Yds. |
| Reinforcing Steel = | | | | | 1194 Lbs. |

## DESIGN LOAD - NUMBER AND SIZE OF PILES

| SPAN STANDARD C-S-18-20 | END BENT: TOTAL DESIGN LOAD IN TONS. | END BENT: MIN. SIZE and NO. of Piles and Av. PILE LOAD in Tons. | INTERMEDIATE BENT: TOTAL DESIGN LOAD IN TONS. | INTERMEDIATE BENT: MIN. SIZE and NO. of Piles and Av. PILE LOAD in Tons. |
|---|---|---|---|---|
| 30' | 181.1 | 14" 6 @ 30.0 Tons<br>16" 6 @ 30.0 Tons<br>18" 5 @ 36.2 Tons | 181.1 | 14" 6 @ 30.0 Tons<br>16" 6 @ 30.0 Tons<br>18" 5 @ 36.2 Tons |
| 32' | 190.5 | 14" 7 @ 27.2 Tons<br>16" 6 @ 31.8 Tons<br>18" 5 @ 38.1 Tons | 190.5 | 14" 7 @ 27.2 Tons<br>16" 6 @ 31.8 Tons<br>18" 5 @ 38.1 Tons |
| 34' | 201.2 | 14" 7 @ 28.8 Tons<br>16" 6 @ 33.5 Tons<br>18" 6 @ 33.5 Tons | 201.2 | 14" 7 @ 28.8 Tons<br>16" 6 @ 33.5 Tons<br>18" 6 @ 33.5 Tons |
| 36' | 212.3 | 16" 7 @ 30.3 Tons<br>18" 6 @ 35.4 Tons | 212.3 | 16" 7 @ 30.3 Tons<br>18" 6 @ 35.4 Tons |
| 38' | 222.0 | 16" 7 @ 31.7 Tons<br>18" 6 @ 37.0 Tons | 222.0 | 16" 7 @ 31.7 Tons<br>18" 6 @ 37.0 Tons |
| 40' | 233.6 | 16" 7 @ 33.4 Tons<br>18" 6 @ 38.9 Tons | 233.6 | 16" 7 @ 33.4 Tons<br>18" 6 @ 38.9 Tons |

Max. Pile Loads Unless Otherwise Instructed By En. Des. Sec.
14" R.C. Piles = 30 Tons Per Pile.
16" R.C. Piles = 34 Tons Per Pile.
18" R.C. Piles = 39 Tons Per Pile.

** To provide for future extension of Bridge, the End Bents are designed for same load as intermediate Bents.

GENERAL NOTES:
Construction Specifications: Latest Approved La. Hwy. Dept. Std. Specs.
Design Specifications - AASHO, 1941.
Live Load H20S16.
All concrete to be class "A".
All dimensions to reinforcing steel are to bar centers.
Quantities computed assuming use of 16" piling.
Cost of expansion material to be included in price bid for other items.

| DATE | DESCRIPTION | BY |
|---|---|---|
| 7-8-49 | Note covering Max. Pile Loading | J.C.H.G. |
| 6-22-48 | Reference to pile lengths omitted | G.H. |
| Jan. 46 | Gen. Notes & Std No. | |
| 7/1/45 | Main Steel | J.T.H. |

REVISIONS

# STANDARD PLAN

REINFORCED CONCRETE PILE BENTS
FOR R.C.D.G. SPANS - H20S16 LOADING
30'-0" CLEAR ROADWAY - 1'-6" SIDEWALKS
TO BE USED WITH STD. PLAN C-S-18-20

DATED Jan. 1, 1945

STATE OF LOUISIANA
DEPARTMENT OF HIGHWAYS

DESIGNED Huey | DETAILED Huey | TRACED
CHECKED | CHECKED Huey | CHECKED Huey
IN CHARGE OF | Head Bridge Draftsman

FOR INFORMATIONAL PURPOSES ONLY