CAST-IN-PLACE ALTERNATE

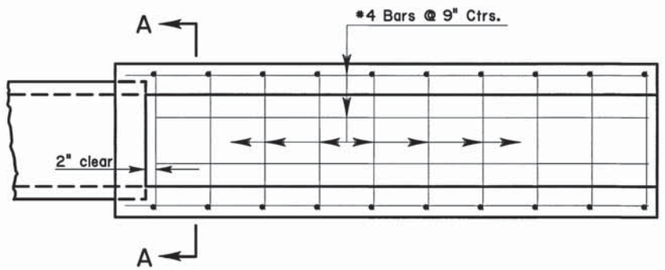

PLAN

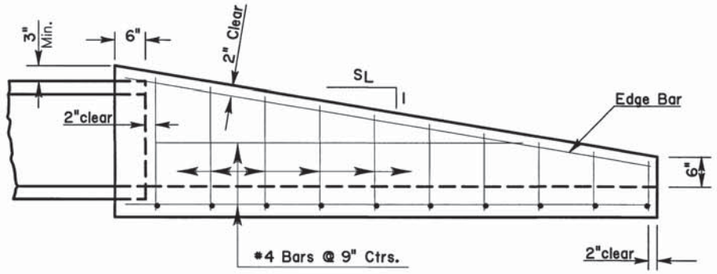

PROFILE

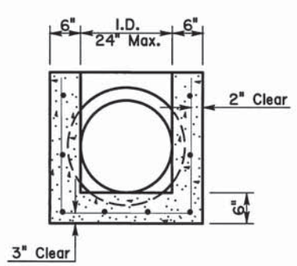

SECTION A-A

PRECAST ALTERNATE

Notes: 1. RCP bell ends which exceed the normal pipe outside diameter (O.D.) shall be removed.
2. Pipe connections shall be sealed with flexible joint sealant.
3. Exposed corners may be chamfered ¾".

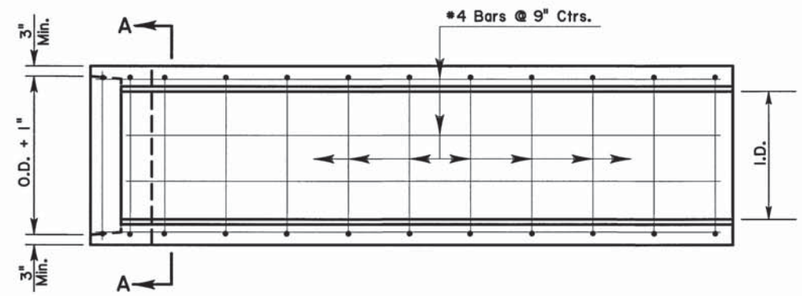

PLAN

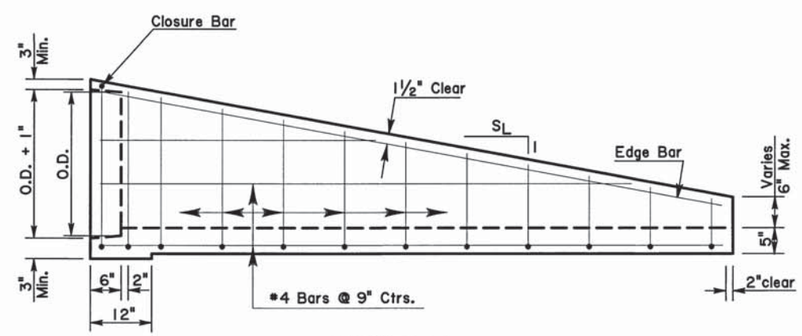

PROFILE

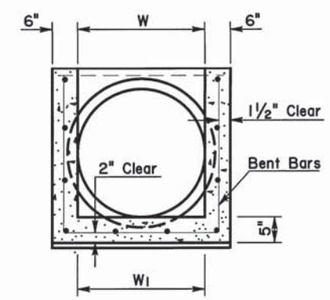

SECTION A-A

Max. difference, $W-W_1$ = 1"

General Notes: (Cast-In-Place & Precast Alternate)

1) While a RCP culvert is detailed, this Safety End shall also be used with RCPA, CMP, CMPA, and RCB culverts. Multiple culverts require multiple Safety Ends.
2) Slope of Safety End walls (S_L:1) shall match the required sideslope. If no sideslope is given, a slope of 6:1 shall be required.
3) The Safety End shall be cast-in-place or precast concrete units and shall be in accordance with Section 702 of the LA DOTD Standard Specifications.
4) Concrete to be Class A1 and reinforcing steel to be #4 Grade 60.

SHEET NUMBER

PARISH	CONTROL SECTION	STATE PROJECT

DESIGN PAA
CHECK
DETAIL KAJ
CHECK PAA
REVIEW
SERIES # 1 OF 1

APPROVED BY CHIEF ENGINEER:
DATE: 08/19/2026

NO.	DATE	REVISION OR CHANGE ORDER DESCRIPTION	BY

SIDE DRAIN SAFETY END - TYPE 1
Maximum Pipe Sizes: 24" RCP
24" CMP
18" Eq. RCPA
18" Eq. CMPA

SETSD1

DOTD
LOUISIANA DEPARTMENT OF TRANSPORTATION & DEVELOPMENT

STANDARD PLAN

8/13/2026 11:2

C:\Users\00267398\Desktop\New Borders\SETSD1\SETSD1.dgn