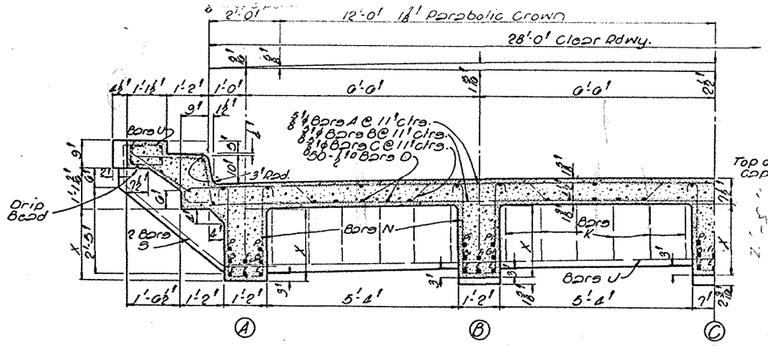

HALF SECTION 'A-A'

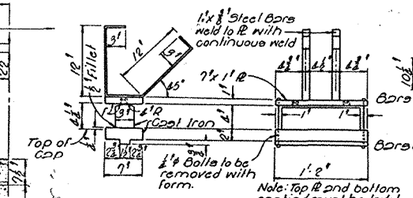

BEARING AT FIXED END

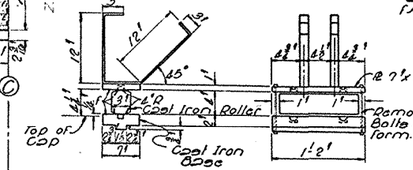

BEARING AT EXP. END

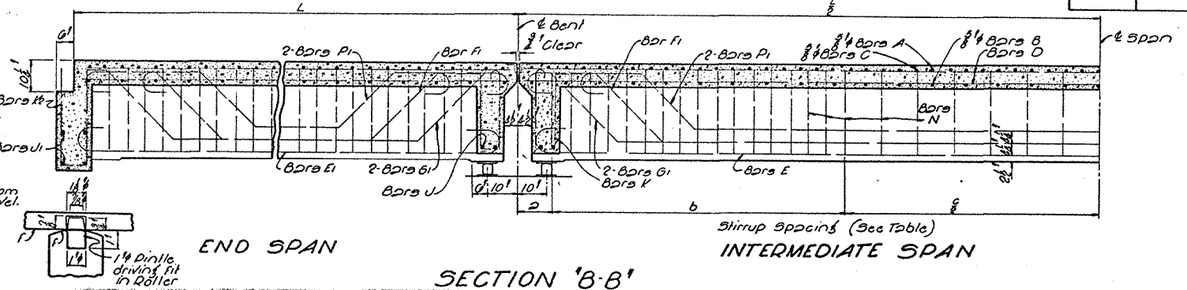

SECTION 'B-B'

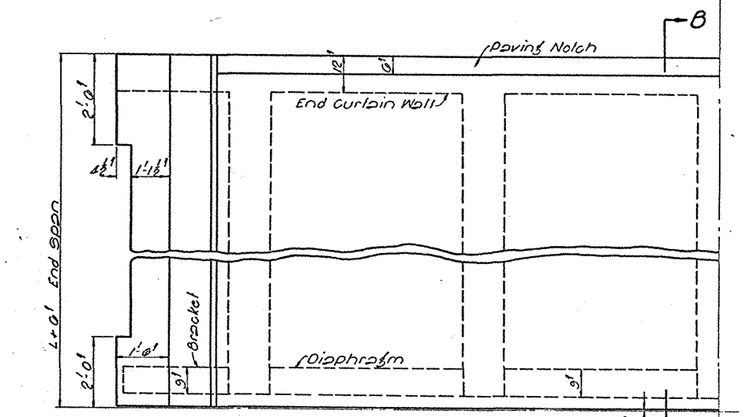

HALF PLAN END SPAN

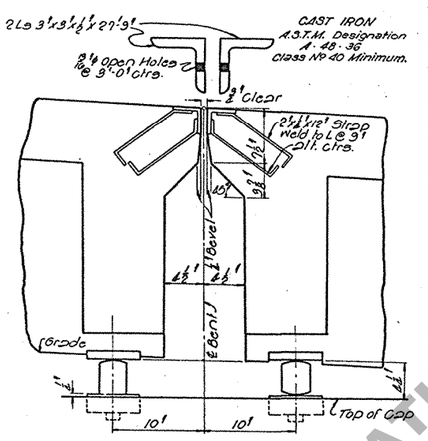

EXPANSION JOINT

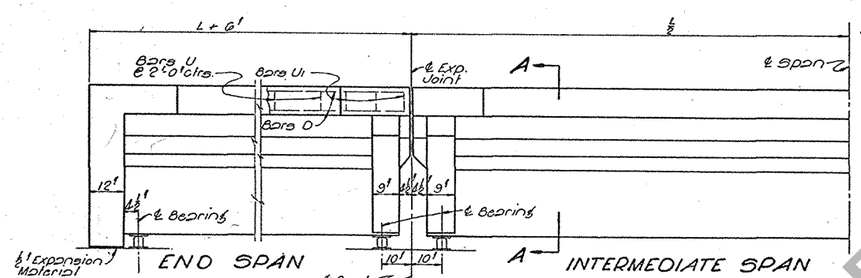

ELEVATION

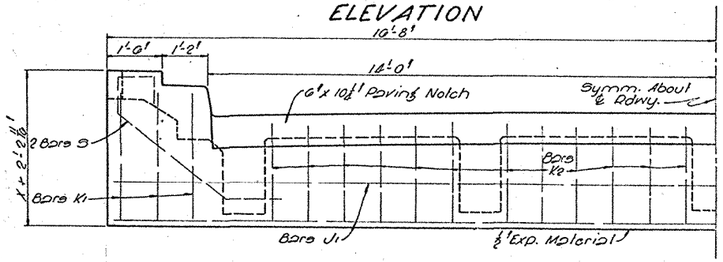

HALF END VIEW - END SPAN

BAR BENDING TABLE

BAR	DIMEN	30' SPAN	32' SPAN	34' SPAN	36' SPAN	38' SPAN	40' SPAN
E	c	28'-2"	30'-2"	32'-2"	34'-2"	36'-2"	38'-2"
E1	c	29'-0"	31'-0"	33'-0"	35'-0"	37'-0"	39'-0"
G	a	0'-4"	0'-4"	0'-4"	0'-4"	0'-4"	0'-4"
	b	1'-8"	1'-9"	1'-10"	1'-11"	2'-0"	2'-2"
	c	24'-9"	26'-1"	27'-11"	29'-9"	31'-7"	33'-9"
	d	2'-4 1/2"	2'-5 3/8"	2'-7 1/8"	2'-8 1/2"	2'-10"	3'-0 3/8"
	e	28'-9"	30'-9"	32'-9"	34'-9"	36'-9"	38'-9"
F	a	1'-10"	1'-10"	1'-10"	1'-10"	1'-10"	1'-10"
	b	1'-8"	1'-9"	1'-10"	1'-11"	2'-0"	2'-2"
	c	21'-9"	23'-1"	24'-11"	26'-9"	28'-7"	30'-9"
	d	2'-4 1/2"	2'-5 3/8"	2'-7 1/8"	2'-8 1/2"	2'-10"	3'-0 3/8"
	e	28'-9"	30'-9"	32'-9"	34'-9"	36'-9"	38'-9"
P	a	1'-8 1/2"	1'-8 1/2"	1'-8 1/2"	1'-8 1/2"	1'-8 1/2"	1'-8 1/2"
	b	1'-4"	1'-5"	1'-6"	1'-7"	1'-8"	1'-10"
	c	18'-11"	20'-9"	22'-7"	24'-5"	26'-3"	27'-11"
	d	1'-10 3/8"	2'-0"	2'-1 3/8"	2'-2 3/8"	2'-4 1/2"	2'-7 1/8"
	e	25'-0"	27'-0"	29'-0"	31'-0"	33'-0"	35'-0"
G1	a	0'-4"	0'-4"	0'-4"	0'-4"	0'-4"	0'-4"
	b	1'-8"	1'-9"	1'-10"	1'-11"	2'-0"	2'-2"
	c	24'-9"	26'-1"	27'-11"	29'-9"	31'-7"	33'-9"
	d	2'-4 1/2"	2'-5 3/8"	2'-7 1/8"	2'-8 1/2"	2'-10"	3'-0 3/8"
	e	28'-9"	30'-9"	32'-9"	34'-9"	36'-9"	38'-9"
F1	a	1'-10"	1'-10"	1'-10"	1'-10"	1'-10"	1'-10"
	b	1'-8"	1'-9"	1'-10"	1'-11"	2'-0"	2'-2"
	c	21'-9"	23'-1"	24'-11"	26'-9"	28'-7"	30'-9"
	d	2'-4 1/2"	2'-5 3/8"	2'-7 1/8"	2'-8 1/2"	2'-10"	3'-0 3/8"
	e	28'-9"	30'-9"	32'-9"	34'-9"	36'-9"	38'-9"
P1	a	1'-8 1/2"	1'-8 1/2"	1'-8 1/2"	1'-8 1/2"	1'-8 1/2"	1'-8 1/2"
	b	1'-4"	1'-5"	1'-6"	1'-7"	1'-8"	1'-10"
	c	18'-11"	20'-9"	22'-7"	24'-5"	26'-3"	27'-11"
	d	1'-10 3/8"	2'-0"	2'-1 3/8"	2'-2 3/8"	2'-4 1/2"	2'-7 1/8"
	e	25'-0"	27'-0"	29'-0"	31'-0"	33'-0"	35'-0"

BAR	LOCATION	30 FT. SPAN Nº	SIZE	UNIT LG.	TOTAL LG.	32 FT. SPAN Nº	SIZE	UNIT LG.	TOTAL LG.	34 FT. SPAN Nº	SIZE	UNIT LG.	TOTAL LG.	36 FT. SPAN Nº	SIZE	UNIT LG.	TOTAL LG.	38 FT. SPAN Nº	SIZE	UNIT LG.	TOTAL LG.	40 FT. SPAN Nº	SIZE	UNIT LG.	TOTAL LG.
A	Top Slab	38	3/4"	32'-0"	1056'-0"	35	3/4"	32'-0"	1120'-0"	37	3/4"	32'-0"	1184'-0"	39	3/4"	32'-0"	1248'-0"	41	3/4"	32'-0"	1312'-0"	43	3/4"	32'-0"	1376'-0"
B	Bottom Slab	33	1	35'-9"	1103'-9"	35	1	35'-9"	1228'-9"	37	1	35'-9"	1324'-9"	39	1	35'-9"	1396'-9"	41	1	35'-9"	1465'-9"	43	1	35'-9"	1515'-9"
C	Bent in Slab	32	1	31'-9"	1016'-0"	34	1	31'-9"	1079'-6"	36	1	31'-9"	1143'-0"	38	1	31'-9"	1206'-0"	40	1	31'-9"	1270'-0"	42	1	31'-9"	1333'-6"
D	Longit. Rod Lab	50	5/16"	29'-8"	1483'-4"	50	5/16"	31'-8"	1583'-4"	50	5/16"	33'-8"	1683'-4"	50	5/16"	35'-8"	1783'-4"	50	5/16"	37'-8"	1883'-4"	50	5/16"	39'-8"	1983'-4"
N	Beam Stirrup	225	1	6'-0"	1402'-0"	235	1	6'-8"	1566'-8"	255	1	6'-10"	1742'-0"	265	1	7'-0"	1855'-0"	280	1	7'-2"	2000'-8"	290	1	7'-0"	2175'-0"
K	Diaphr.	24 END 48 INT.	1	5'-10"	140'-0" 2 END 280'-0" 4 INT.		1	6'-0"	144'-0" 2 END 288'-0" 4 INT.		1	6'-2"	148'-0" 2 END 296'-0" 4 INT.		1	6'-4"	152'-0" 2 END 304'-0" 4 INT.		1	6'-6"	156'-0" 2 END 312'-0" 4 INT.		1	6'-8"	160'-0" 2 END 320'-0" 4 INT.
S	Bracket	8	1	7'-10"	62'-8"	8	1	7'-10"	62'-8"	8	1	7'-10"	62'-8"	8	1	7'-10"	62'-8"	8	1	7'-10"	62'-8"	8	1	7'-10"	62'-8"
U	Curb	26	1	3'-5"	88'-10"	28	1	3'-5"	95'-8"	30	1	3'-5"	102'-6"	32	1	3'-5"	109'-4"	34	1	3'-5"	116'-2"	36	1	3'-5"	123'-0"
U1	Curb at Rail Post	12	1	4'-2"	50'-0"	12	1	4'-2"	50'-0"	12	1	4'-2"	50'-0"	12	1	4'-2"	50'-0"	12	1	4'-2"	50'-0"	12	1	4'-2"	50'-0"
J	Diaphr.	2 END 4 INT.	1	26'-10"	53'-8" 2 END 107'-4" 4 INT.		1	26'-10"	53'-8" 2 END 107'-4" 4 INT.		1	26'-10"	53'-8" 2 END 107'-4" 4 INT.		1	26'-10"	53'-8" 2 END 107'-4" 4 INT.		1	26'-10"	53'-8" 2 END 107'-4" 4 INT.		1	26'-10"	53'-8" 2 END 107'-4" 4 INT.
J1	End Span	4	1	33'-0"	132'-0"	4	1	33'-0"	132'-0"	4	1	33'-0"	132'-0"	4	1	33'-0"	132'-0"	4	1	33'-0"	132'-0"	4	1	33'-0"	132'-0"
K1		6	1	8'-4"	50'-0"	6	1	8'-6"	51'-0"	6	1	8'-8"	52'-0"	6	1	8'-10"	53'-0"	6	1	9'-0"	54'-0"	6	1	9'-2"	55'-0"
K2		24	1	6'-8"	160'-0"	24	1	6'-10"	164'-0"	24	1	7'-0"	168'-0"	24	1	7'-2"	172'-0"	24	1	7'-4"	176'-0"	24	1	7'-6"	180'-0"
	TOTAL INTERM. SPAN				9/16 BARS 3225'-9" = 3584'-4"				9/16 BARS 3431'-9" = 3812'-8"				9/16 BARS 3637'-9" = 4041'-4"				9/16 BARS 3889'-9" = 4320'-0"				9/16 BARS 4097'-9" = 4550'-0"				9/16 BARS 4229'-9" = 4699'-4"
	TOTAL END SPAN				9/16 BARS 3235'-9" = 3594'-4"				9/16 BARS 3443'-9" = 3826'-8"				9/16 BARS 3651'-9" = 4057'-4"				9/16 BARS 3903'-9" = 4336'-0"				9/16 BARS 4111'-9" = 4566'-8"				9/16 BARS 4229'-9" = 4699'-4"
E	INTER. SPAN	6	1 5/8"	31'-2"	187'-0"	15	1 1/2"	33'-0"	502'-0"	15	1 1/2"	35'-0"	532'-0"	15	1 1/2"	37'-0"	562'-0"	15	1 1/2"	39'-0"	592'-0"	15	1 1/2"	41'-0"	622'-0"
E1	END SPAN	3	1 5/8"	31'-0"	93'-0"	15	1 1/2"	32'-0"	480'-0"	15	1 1/2"	34'-0"	510'-0"	15	1 1/2"	36'-0"	540'-0"	15	1 1/2"	38'-0"	570'-0"	15	1 1/2"	40'-0"	600'-0"
G	INTER. SPAN	3	1 5/8"	32'-0"	192'-0"	4	1 1/0"	32'-0"	128'-0"	4	1 1/0"	34'-0"	136'-0"	4	1 1/0"	36'-0"	144'-0"	4	1 1/0"	38'-0"	152'-0"	4	1 1/0"	40'-0"	160'-0"
	END SPAN	3	1 5/8"	32'-0"	96'-0"	2	1 1/0"	32'-0"	64'-0"	2	1 1/0"	34'-0"	68'-0"	2	1 1/0"	36'-0"	72'-0"	2	1 1/0"	38'-0"	76'-0"	2	1 1/0"	40'-0"	80'-0"
	Beam A	4	1 1/0"	32'-9"	129'-0"	4	1 1/0"	34'-8"	137'-8"	4	1 1/0"	36'-5"	145'-8"	4	1 1/0"	38'-0"	155'-4"	4	1 1/0"	39'-10"	165'-0"	4	1 1/0"	41'-9"	170'-0"
F		2	A	32'-9"	64'-0"	2	A	34'-8"	68'-8"	2	A	36'-5"	72'-10"	2	A	38'-0"	77'-8"	2	A	41'-9"	82'-0"	2	A	43'-0"	86'-0"
P		4	A	28'-9"	115'-0"	4	A	30'-10"	123'-4"	4	A	32'-11"	131'-8"	4	1 1/0"	35'-0"	140'-0"	4	1 1/0"	37'-4"	149'-4"	4	A	39'-0"	156'-0"
G1		6	B-C	32'-9"	193'-0"	6	1 1/2"	34'-8"	208'-0"	6	1 1/2"	36'-9"	220'-0"	6	1 1/2"	39'-0"	235'-0"	6	1 1/2"	41'-9"	247'-0"	6	1 1/2"	43'-4"	260'-0"
F1		3	B-C	32'-9"	96'-0"	3	1 1/2"	34'-8"	104'-0"	3	1	36'-9"	110'-9"	3	1	39'-0"	117'-0"	3	1	41'-9"	125'-0"	3	1	43'-4"	130'-0"
P1		6	B-C	28'-9"	172'-0"	6	1	30'-10"	185'-0"	6	1	33'-0"	199'-0"	6	1 1/0"	35'-0"	212'-0"	6	1	37'-8"	226'-0"	6	1	39'-0"	233'-0"
	TOTAL INTERM. SPAN				1/16 BARS 1930'-8" = 2202"				1/16 BARS 2067'-0" = 2359"				1/16 BARS 2338'-0" = 2669"				1/16 BARS 2515'-0" = 2870"				1/16 BARS 2689'-0" = 3069"				1/16 BARS 2810'-0" = 3206"
	TOTAL END SPAN				1/16 BARS 1921'-0" = 2192"				1/16 BARS 2056'-0" = 2347"				1/16 BARS 2191'-0" = 2500"				1/16 BARS 2367'-0" = 2700"				1/16 BARS 2543'-0" = 2903"				1/16 BARS 2670'-0" = 3047"

HANDRAIL C.M. 1.05

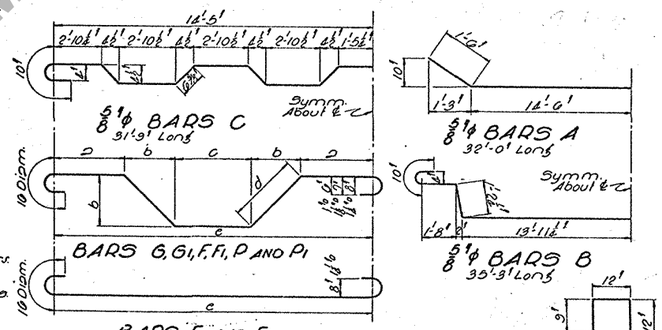

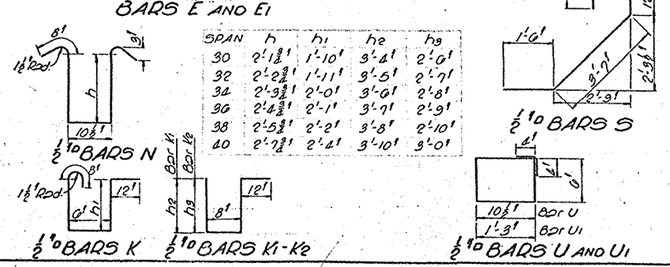

SPAN	h	h1	h2	h3
30	2'-1 3/8"	1'-10"	3'-4"	2'-0"
32	2'-2 3/8"	1'-11"	3'-5"	2'-7"
34	2'-3 3/8"	2'-0"	3'-6"	2'-8"
36	2'-4 3/8"	2'-1"	3'-7"	2'-9"
38	2'-5 3/8"	2'-2"	3'-8"	2'-10"
40	2'-7 3/8"	2'-4"	3'-10"	3'-0"

DIMENSIONS AND QUANTITIES

SPAN IN FEET	X	STIRRUP SPACING a	b	c	CONC. IN CU. YDS. END SPAN	INT. SPAN	REINF. STEEL - LBS. END SPAN	INT. SPAN	STRUCT. STEEL - LBS. END SPAN	INT. SPAN
30	1'-11"	1'-0" 18 spaces	1'-8'-0"	18 spaces 12"	16'-0"	21.28	39.51	11499	11311	1082	2004
32	2'-0"	1'-0" 16 spaces	1'-8'-0"	16 spaces 12"	16'-0"	22.66	42.06	12727	12534	1082	2004
34	2'-1"	1'-0" 18 spaces	1'-9'-0"	18 spaces 12"	16'-0"	24.05	45.88	13921	13527	1082	2004
36	2'-2"	1'-0" 18 spaces	1'-9'-0"	18 spaces 12"	16'-0"	25.43	48.71	15073	14877	1082	2004
38	2'-3"	1'-0" 18 spaces	1'-9'-0"	18 spaces 12"	16'-0"	26.81	52.53	16533	16336	1082	2004
40	2'-5"	1'-0" 19 spaces	1'-9'-0"	19 spaces 12"	16'-0"	28.20	56.77	17149	16951	1082	2004

GENERAL NOTES

Const. Specs. - Latest Approved La. Hwy. Dept. Std. Specs.
Design Specs. - La. Highway Commission 1940.
Live Load: H20
Dead Load: Calculated weight of conc. plus 15 Lbs. per sq. ft. future wearing surface.
All Conc. to be Class 1 P.T.
Dimensions to reinforcing steel are to bar clrs.
Exposed corners to have 3/4" chamfer unless otherwise noted.

STANDARD PLAN
R.C. DECK GIRDER SPANS
28'-0" CLEAR ROADWAY
30'-0" TO 40'-0" SPANS
TO BE USED WITH STD. PLAN CS.1.20 & CS.1A.20

DATE	DESCRIPTION	BY
Jan. 46	Gen. Notes & Std No.	
3-26-41	Cast Iron Note	T.A.B.
3-21-41	30 & 2nd 40' Spans Added	D.L.W.

REVISIONS

LOUISIANA HIGHWAY COMMISSION
BATON ROUGE, LA. JANUARY 1941

DESIGNED D. Lewis | DETAILED D. Lewis | TRACED J. H. Jackson
CHECKED C. L. Wilkinson | CHECKED C. L. Wilkinson | CHECKED C. L. Wilkinson
IN CHARGE OF | ROAD BRIDGE DESIGNER

C-B-1.20

FOR INFORMATIONAL PURPOSES ONLY